HT4001®

Plasma Arc Cutting System

Instruction Manual
802000 – Revision 18

EN60974-1
EN50199

Hypertherm®
The world leader in
plasma cutting technology™

Changed Page **Description** **IM200 Rev 15 to 17** 8/31/03

3.11 & 7.12	Removed neon/pilot light. Updated warning box to remove reference to light.
6.5	Item # 13 changed from 041588 to 041763. Part number below 041588 (firmware) was removed.
6.14	Updated art to remove pilot light
6.15	Removed item # 15 (pilot light) Bumped following #s up 1
6.16 & 6.17	Updated art to remove pilot light. Removed item # 10 (pilot light)
6.47	Changed contactor part number from 003116 (170A) to 003217 (185A)
7.3	Kit numbers changed. Third bullet point under Power Supplies. 129227 to 129972 & 129228 to 129973. Text re-flowed. #1 under Protecting Copper Surfaces is now on page 7.4
Section 8	Wiring diagrams Revision change from KY to KZ

Changed Page **Description** **IM200 Rev 14 to 15** 9/18/01

1.1-1a.6	Updated safety sections
0	Updated addresses on subsidiary page

Changed Page **Description** **IM200 Rev 13 to 14** 5/25/2000

4.07	new graphic of center bail with new relay
4.12	new signals for remote on/off
4.13	added graphic TB4 with note about jumper
4.37	new TB4 graphic
6.10	New graphic of power supply rear bail
6.11	part number addition for on/off relay
8.05	Uprevved wiring diagrams to KY (14 pages)
a.4 & 5	new location of disabling surge injection circuit

Changed Page **Description** **IM200 Rev 12 to 13** 4/10/2000

2.12	changed dimensions for new 401 power supply
7.23	new graphic of chopper
a.02	changed slave modification because of HDR 401 power supply
a.03-11	changed slave modification because of HDR 401 power supply
8.10 of 14	updated 401 wiring diagram portion of HT4001 schematic

Changed Page **Description** **IM200 Rev 11 to 12** 2/1/99

0.01	uprevved because of new 340A electrodes
5.20,21 & 26	changed 340A electrodes
6.01	Fixed TOC
6.06 & 07	Removed 4 diodes from rear of front panel
6.42, 44 & 46	changed pn of 340A electrode
6.47	removed diodes from recommended spare parts
8.05	Uprevved wiring diagrams to KV (14 pages)
4.12	added note about DC relay kit
6.21 & 47	changed ps1 and ps2 to 005243
7.21	changed 100 psi to 80 psi
0.02	added plumbing and electrical codes statement to warranty
3.02	bolded installation by qualified...; rewrote hard plumbing suggestions
4.14	Added note to check uP board before connecting V/C cable
3.05	Added 90¡ C recommended power cables

Changed Page **Description** **IM200 Rev 10 to 11** 7/24/98

3.04 & 4.03	Added reference to grounding appendix
5.13	Clarified setting current
5.14 & 15	bumped page
6.47	Corrected PCB2 and firmware part numbers
7.13	New graphic of power distribution board, fuse f4
7.24-27	Updated LEDs on Relay board
f.01-04	Added system grounding appendix
8.05	Uprevved wiring diagrams to KU (14 pages)
0.05	Added system grounding to TOC
0.10	Added system grounding figures to TOC
4.19	New TB3 figure
4.37	New TB3 figure
6.21	006109 replacing 006066
6.23	006109 replacing 006066
6.47	006109 replacing 006066

Changed Page **Description** **IM200 Rev 9 to 10** 4/15/98

0.01	Uprevved to 10 - 4/15/98 with serial #4001-000805
4.36	Changed name of cable because serial i/o board is no longer required.
6.04	New graphic of power supply front panel
6.05	Changed p/n of relay pcb, control board pcb, and firmware.
6.40	Changed graphic, part number and description of fig. 6-41
a.02	Changed slave kit number and contents.
a.03	Changed graphic of inside of H-401 power supply-i/o board eliminated.
a.04	New directions for installation - serial i/o board eliminated
a.05	Changed labels
a.06	bumped page
a.08	New graphic, p/n and signal description
a.09	Changed graphic from serial i/o pcb to current setpoint pcb
c.04-c.06 & d.03&.04	New graphic of TB5
8.05	Uprevved wiring diagrams to KS (14 pages)

Changed Page **Description** **IM200 Rev 8 to 9** 3/27/98

3.04	Added note about voltage needing to be within 15%
4.07 & 6.08	New graphic of start circuit II
6.05	New rev firmware
6.09	New part no. for start circuit II
6.14	New graphic of in-rush protection circuit
6.15	New part no. for in-rush protection circuit
7.18	bumped text from pg. 7-19
7.19	Added troubleshooting for voltage dropping below 15%
7.28	Minor text change
7.29	Added error code #15
6.06	Added graphic of phase loss protection circuit
6.07	Added phase loss protection circuit part no.
8.05	Uprevved wiring diagrams to KR (14 pages)
0.01	Uprevved to 9 - 3/27/98 with serial #4001-000800

Changed Page **Description** **IM200 Rev 7 to 8** 1/16/98

0.01	Uprevved to 8 - 1/15/98 with serial # 715
0.06	Added 2 new figure #s
0.07-.10	bumped page
2.01	Repaginated due to additional pages
2.05	Added power factor
2.07	Added figures of torches with dimensions
2.08-.14	bumped page
4.08,10 & 20	corrected cable designation in table
6.15	Added chassis SA p/n for in-rush circuit
6.31	Added 60’ lengths to cables
i.1-i.6	updated index

Changed Page **Description** **IM200 Rev 6 to 7** 11/1/97

0.01	Uprevved to 7 - implement 11/1 with serial#603
2.06	Added 440/480 power supply numbers
3.04	Added 440V current and fuse specs
3.05	Added 440V cable size recomendation
3.09	Added 440V Transformer picture
4.04	Added torque specification
6.11	Added 440V control xfrmr number
6.13	Added 440V power xfrmr number
8.05	Uprevved wiring diagrams to KM (14 pages)
4.26	Added note to see torque specs
4.30	Added note to see torque specs

Changed Page **Description** **IM200 Rev 5 to 6** 8/15/97

7.03	added note to check contactor contacts
7.04 & 05	bumped page
0.01	Uprevved to 6 - implement 8/15 with serial#539
0.02	Changed customer service tel. #
3.11	Changed light...contactor to lights...contactors
4.02	Changed customer service tel. #
6.14	Changed dwg of power supply rear wall inside
6.15	Added in-rush components to parts list
7.09 & 10	Added CON2 to sequence of operation
7.12	Changed light...contactor to lights...contactors
8.05	Uprevved wiring diagrams to GG (14 pgs)
2.05	changed OCV spec to 361V
7.22 & 23	Corrected chopper test procedure

Changed Page **Description** **IM200 Rev 4 to 5** 4/14/97

5.25&26	Changed 120468, 120469 to 120470, 120471
2.05,3.02,5.09& 13	Added tolerance to gas pressures
6.10 &.11	Removed resistor, cap from I/O panel
6.21	Added 011081 float stop
6.42-45	removed qtys from consumable parts list
6.46	removed non-ce retaining caps from CE consumable parts kits
6.47	Added 011081 float stop
8.05	Uprevved wiring diagrams to EE (14 pgs)
0.05	Updated TOC for torch coolant draining
7.01	Added torch coolant draining
7.03	Referenced torch coolant draining
7.30	Added torch coolant draining procedure
4.10	Added omitted signals to gas console cable
0.01	Uprevved to 5 - implement 4/14 with serial#514
2.09	Corrected dimension on gas console holes
5.20	Corrected reference to PAC611 - to PAC620
4.06	Referenced to section 6 for complete list of cable and hose lengths
6.31-.40	additional lengths

0.01	Uprevved due to LVD changes, 360A Beveling consumables, Kip valves
0.03	updated TOC with new safety sections
0.04	changed page of changing consumable parts
1.01-1a.04	new safety section
2.02	removed reference to CE compliance
2.06	removed 380 and 415VAC references
3.11	removed 380-415VAC reference
5.01	changed page numbers for changing consumable parts
5.02 & 5.09	Changed operation of STATUS indicators
5.20	Added 340A beveling, changed 120390 to 120392, added CE warning
5.21-5.24	Added CE retaining caps
5.25	Added CE retaining caps, changed 120390 to 120392
5.26	340A bev ct chrt & consums, CE ret cap, chngd 120390 to 120292
5.27-5.32	Added CE retaining caps
5.33	page bump, added cap removal tool for CE caps
6.05	New Interlock PCB #, new firmware rev (L)
6.07	New chopper #
6.11	New power distribution board #
6.46	New power distribution board #, chopper #, interlock PCB #
7.06	Flow chart change for chopper temp switch and status LED functioning
7.11	removed reference to 380-415V CE power supplies
7.13	New power distribution board graphic
7.15,20 & 21	Changed operation of STATUS indicators
7.23	Removed reference to temp switch on chopper
8.05	Uprevved wiring diagrams to Z (14 pgs)
6.43&45	Removed 120392 ret cap
2.07	Added warning to use CE retaining caps
2.09	New gas console part no.
4.11,23,27 & 29	New picture of gas console rear
4.30	New picture and part no. for off valve cable and hose assy
6.01	Added new CE consumable parts kits to TOC
6.20	New picture of gas console rear
6.21	new part numbers for valves
6.22	New picture of motor valve console
6.23	new part numbers for valves
6.25	New part number for potentiometer
6.38	New picture and part no. for off valve cable and hose assy
6.47	Changed p/n of valve in gas console-recommended spare part
7.14,17 & 18	Changed "light" to "illuminate" - international translation ease
7.28	Added postflow gas control and new picture of control board
5.20-5.45	Changed 120392 to 120390
6.05,7.06 & 20	Changed 24VAC to 12VDC for interlock voltage
6.38	Changed p/n of off-valve cable
6.11 & 46	New power distribution board #
4.10	Added signals for extra valves in cable diagram
4.28	Added signals for extra valves in cable diagram

HT4001®

Instruction Manual
(P/N 802000)

Revision 18 – November, 2013

Hypertherm, Inc.
Hanover, NH USA

www.hypertherm.com

© Copyright 2013 Hypertherm, Inc.
All Rights Reserved

Hypertherm, HyDefinition, HT, LongLife and PAC are trademarks of Hypertherm, Inc.,
and may be registered in the United States and/or other countries

Hypertherm, Inc.
Etna Road, P.O. Box 5010
Hanover, NH 03755 USA
603-643-3441 Tel (Main Office)
603-643-5352 Fax (All Departments)
info@hypertherm.com (Main Office Email)
800-643-9878 Tel (Technical Service)
service@hypertherm.com (Technical Service Email)
800-737-2978 Tel (Customer Service)
customer.service@hypertherm.com (Customer Service Email)

Hypertherm Automation, LLC
5 Technology Drive, Suite 300
West Lebanon, NH 03755 USA
603-298-7970 Tel
603-298-7977 Fax

Hypertherm Plasmatechnik, GmbH
Technologiepark Hanau
Rodenbacher Chaussee 6
63457 Hanau-Wolfgang, Deutschland
49 6181 58 2100 Tel
49 6181 58 2134 Fax
49 6181 58 2123 (Technical Service)

Hypertherm (S) Pte Ltd.
No. 19 Kaki Bukit Road 2
K.B. Warehouse Complex
Singapore 417847, Republic of Singapore
65 6 841 2489 Tel
65 6 841 2490 Fax
65 6 841 2489 (Technical Service)

Hypertherm UK, Ltd.
9 Berkeley Court, Manor Park
Runcorn, Cheshire, England WA7 1TQ
44 1928 579 074 Tel
44 1928 579 604 Fax

France
15 Impasse des Rosiers
95610 Eragny, France
00 800 3324 9737 Tel
00 800 4973 7329 Fax

Hypertherm S.r.l.
Via Torino 2
20123 Milano, Italia
39 02 725 46 312 Tel
39 02 725 46 400 Fax
39 02 725 46 314 (Technical Service)

Hypertherm Europe B.V.
Vaartveld 9
4704 SE Roosendaal, Nederland
31 165 596907 Tel
31 165 596901 Fax
31 165 596908 Tel (Marketing)
31 165 596900 Tel (ETSO – Technical Service)
00 800 49 73 7843 Tel (ETSO – Technical Service toll-free in Europe)

Japan
1952-14 Yata-Natsumegi
Mishima City, Shizuoka Pref.
411-0801 Japan
81 0 559 75 7387 Tel
81 0 559 75 7376 Fax

Hypertherm Brasil Ltda.
Rua Visconde de Santa Isabel, 20 – Sala 611
Vila Isabel, RJ
Brasil CEP 20560-120
55 21 2278 6162 Tel
55 21 2578 0947 Fax

EMC INTRODUCTION

Hypertherm's CE-marked equipment is built in compliance with standard EN50199. The equipment should be installed and used in accordance with the information below to achieve electromagnetic compatibility.

The limits required by EN50199 may not be adequate to completely eliminate interference when the affected equipment is in close proximity or has a high degree of sensitivity. In such cases it may be necessary to use other measures to further reduce interference.

This plasma equipment is designed for use only in an industrial environment.

INSTALLATION AND USE

The user is responsible for installing and using the plasma equipment according to the manufacturer's instructions. If electromagnetic disturbances are detected then it shall be the responsibility of the user to resolve the situation with the technical assistance of the manufacturer. In some cases this remedial action may be as simple as earthing the cutting circuit, see *Earthing of Workpiece*. In other cases it could involve constructing an electromagnetic screen enclosing the power source and the work complete with associated input filters. In all cases electromagnetic disturbances must be reduced to the point where they are no longer troublesome.

ASSESSMENT OF AREA

Before installing the equipment the user shall make an assessment of potential electromagnetic problems in the surrounding area. The following shall be taken into account:

a. Other supply cables, control cables, signalling and telephone cables; above, below and adjacent to the cutting equipment.
b. Radio and television transmitters and receivers.
c. Computer and other control equipment.
d. Safety critical equipment, for example guarding of industrial equipment.
e. Health of the people around, for example the use of pacemakers and hearing aids.
f. Equipment used for calibration or measurement.
g. Immunity of other equipment in the environment. User shall ensure that other equipment being used in the environment is compatible. This may require additional protection measures.
h. Time of day that cutting or other activities are to be carried out.

The size of the surrounding area to be considered will depend on the structure of the building and other activities that are taking place. The surrounding area may extend beyond the boundaries of the premises.

METHODS OF REDUCING EMISSIONS

Mains Supply

Cutting equipment must be connected to the mains supply according to the manufacturer's recommendations. If interference occurs, it may be necessary to take additional precautions such as filtering of the mains supply. Consideration should be given to shielding the supply cable of permanently installed cutting equipment, in metallic conduit or equivalent. Shielding should be electrically continuous throughout its length. The shielding should be connected to the cutting mains supply so that good electrical contact is maintained between the conduit and the cutting power source enclosure.

Maintenance of Cutting Equipment

The cutting equipment must be routinely maintained according to the manufacturer's recommendations. All access and service doors and covers should be closed and properly fastened when the cutting equipment is in operation. The cutting equipment should not be modified in any way except for those changes and adjustments covered in the manufacturer's instructions. In particular, the spark gaps of arc striking and stabilizing devices should be adjusted and maintained according to the manufacturer's recommendations.

Cutting Cables

The cutting cables should be kept as short as possible and should be positioned close together, running at or close to the floor level.

Equipotential Bonding

Bonding of all metallic components in the cutting installation and adjacent to it should be considered. However, metallic components bonded to the workpiece will increase the risk that the operator could receive a shock by touching these metallic components and the electrode at the same time. The operator should be insulated from all such bonded metallic components.

Earthing of Workpiece

Where the workpiece is not bonded to earth for electrical safety, nor connected to earth because of its size and position, for example, ship's hull or building steelwork, a connection bonding the workpiece to earth may reduce emissions in some, but not all instances. Care should be taken to prevent the earthing of the workpiece increasing the risk of injury to users, or damage to other electrical equipment. Where necessary, the connection of the workpiece to earth should be made by a direct connection to the workpiece, but in some countries where direct connection is not permitted, the bonding should be achieved by suitable capacitances selected according to national regulations.

Note. The cutting circuit may or may not be earthed for safety reasons. Changing the earthing arrangements should only be authorized by a person who is competent to assess whether the changes will increase the risk of injury, for example, by allowing parallel cutting current return paths which may damage the earth circuits of other equipment. Further guidance is given in IEC TC26 (sec)94 and IEC TC26/108A/CD Arc Welding Equipment Installation and Use.

Screening and Shielding

Selective screening and shielding of other cables and equipment in the surrounding area may alleviate problems of interference. Screening of the entire plasma cutting installation may be considered for special applications.

WARNING

Genuine Hypertherm parts are the factory-recommended replacement parts for your Hypertherm system. Any damage caused by the use of other than genuine Hypertherm parts may not be covered by the Hypertherm warranty.

WARNING

You are responsible for the safe use of the Product. Hypertherm does not and cannot make any guarantee or warranty regarding the safe use of the Product in your environment.

GENERAL

Hypertherm, Inc. warrants that its Products shall be free from defects in materials and workmanship, if Hypertherm is notified of a defect (i) with respect to the power supply within a period of two (2) years from the date of its delivery to you, with the exception of G3 Series power supplies, which shall be within a period of three (3) years from the date of delivery to you, and (ii) with respect to the torch and leads within a period of one (1) year from its date of delivery to you. This warranty shall not apply to any Product which has been incorrectly installed, modified, or otherwise damaged. Hypertherm, at its sole option, shall repair, replace, or adjust, free of charge, any defective Products covered by this warranty which shall be returned with Hypertherm's prior authorization (which shall not be unreasonably withheld), properly packed, to Hypertherm's place of business in Hanover, New Hampshire, or to an authorized Hypertherm repair facility, all costs, insurance and freight prepaid. Hypertherm shall not be liable for any repairs, replacement, or adjustments of Products covered by this warranty, except those made pursuant to this paragraph or with Hypertherm's prior written consent. **The warranty above is exclusive and is in lieu of all other warranties, express, implied, statutory, or otherwise with respect to the Products or as to the results which may be obtained therefrom, and all implied warranties or conditions of quality or of merchantability or fitness for a particular purpose or against infringement. The foregoing shall constitute the sole and exclusive remedy for any breach by Hypertherm of its warranty**. Distributors/OEMs may offer different or additional warranties, but Distributors/OEMs are not authorized to give any additional warranty protection to you or make any representation to you purporting to be binding upon Hypertherm.

PATENT INDEMNITY

Except only in cases of products not manufactured by Hypertherm or manufactured by a person other than Hypertherm not in strict conformity with Hypertherm's specifications and in cases of designs, processes, formulae, or combinations not developed or purported to be developed by Hypertherm, Hypertherm will defend or settle, at its own expense, any suit or proceeding brought against you alleging that the use of the Hypertherm product, alone and not in combination with any other product not supplied by Hypertherm, infringes any patent of any third party. You shall notify Hypertherm promptly upon learning of any action or threatened action in connection with any such alleged infringement, and Hypertherm's obligation to indemnify shall be conditioned upon Hypertherm's sole control of, and the indemnified party's cooperation and assistance in, the defense of the claim.

LIMITATION OF LIABILITY

In no event shall Hypertherm be liable to any person or entity for any incidental, consequential, indirect, or punitive damages (including but not limited to lost profits) regardless of whether such liability is based on breach of contract, tort, strict liability, breach of warranties, failure of essential purpose or otherwise and even if advised of the possibility of such damages.

LIABILITY CAP

In no event shall Hypertherm's liability, whether such liability is based on breach of contract, tort, strict liability, breach of warranties, failure of essential purpose or otherwise, for any claim action suit or proceeding arising out of or relating to the use of the Products exceed in the aggregate the amount paid for the Products that gave rise to such claim.

INSURANCE

At all times you will have and maintain insurance in such quantities and types, and with coverage sufficient and appropriate to defend and to hold Hypertherm harmless in the event of any cause of action arising from the use of the Products.

NATIONAL AND LOCAL CODES

National and Local codes governing plumbing and electrical installation shall take precedent over any instructions contained in this manual. **In no event** shall Hypertherm be liable for injury to persons or property damage by reason of any code violation or poor work practices.

TRANSFER OF RIGHTS

You may transfer any remaining rights you may have hereunder only in connection with the sale of all or substantially all of your assets or capital stock to a successor in interest who agrees to be bound by all of the terms and conditions of this Warranty.

Electromagnetic Compatibility (EMC) ..... **i**
Warranty ..... **ii**

Section 1 SAFETY **1-1**
Recognize Safety Information 1-2
Follow Safety Instructions 1-2
Cutting Can Cause Fire or Explosion 1-2
Electric Shock Can Kill 1-3
Cutting Can Produce Toxic Fumes 1-3
A Plasma Arc Can Cause Injury and Burns 1-4
Arc Rays Can Burn Eyes and Skin 1-4
Grounding Safety 1-4
Compressed Gas Equipment Safety 1-5
Gas Cylinders Can Explode If Damaged 1-5
Noise Can Damage Hearing 1-5
Pacemaker and Hearing Aid Operation 1-5
A Plasma Arc Can Damage Frozen Pipes 1-5
Additional Safety Information 1-5
Warning Label 1-6

Section 1a SÉCURITÉ **1a-1**
Identifier les consignes de sécurité 1a-2
Suivre les instructions de sécurité 1a-2
Le coupage peut provoquer un incendie ou une explosion 1a-2
Les chocs électriques peuvent être fatals 1a-3
Le coupage peut produire des vapeurs toxiques 1a-3
L'arc plasma peut provoquer des blessures ou des brûlures 1a-4
Mise à la masse et à la terre 1a-4
Les rayons de l'arc peuvent brûler les yeux et la peau 1a-4
Sécurité des bouteilles de gaz comprimé 1a-5
Les bouteilles de gaz comprimé peuvent exploser en cas de dommages 1a-5
Le bruit peut provoquer des problèmes auditifs 1a-5
Pacemakers et prothéses auditives 1a-5
Étiquette de sécurité 1a-6

Section 2 DESCRIPTION & SPECIFICATIONS **2-1**
Description 2-2
- HT4001 Power supply 2-2
- Remote High Frequency (RHF) Console 2-2
- Gas Console 2-3
- Motor Valve Console 2-3
- Remote Voltage/Current (V/C) Control – Optional 2-3
- Timer/Counter – Optional 2-4
- Water Chiller – Optional 2-4
- Initial Height Sensing (IHS) – Optional 2-4
- H401 Slave Power Supply – Optional 2-4
- Water Muffler – Optional 2-4

Specifications....2-5
System Requirements....2-5
HT4001 Power Supply....2-5
HT4001 Power Supply with Slave....2-5
PAC620 Machine Torches....2-7
Remote High Frequency Console....2-8
Digital Remote (DR) V/C Control....2-9
Programmable Remote (PR) V/C Control....2-9
Gas Console....2-10
Motor Valve Console....2-10
Initial Height Sensing....2-11
Timer/Counter....2-11
Water Chiller....2-12
H401 Power Supply....2-12
Water Muffler....2-12
IEC Symbols Used....2-13

Section 3 PRE-INSTALLATION....3-1
Introduction....3-2
Gas Requirements....3-2
Water Supply Requirements....3-3
Grounding Requirements....3-4
Power Requirements....3-4
Line Disconnect Switch....3-5
Power Cables....3-5
Positioning the Power Supplies....3-6
Transformer Configurations....3-7
Connecting the Power....3-11
Torch Lifter Requirement....3-12
Optional Equipment....3-12
Water Muffler....3-12
Initial Height Sensing (IHS)....3-13

Section 4 INSTALLATION....4-1
Upon Receipt....4-2
Claims....4-2
Module Grounding and Grounding Checks....4-3
Noise Levels (Decibels)....4-3
System Units Placement....4-4
HT4001 Interconnection Reference Map....4-5
Power Supply Connections....4-6
RHF Console Connections....4-22
Gas Console Connections....4-26
Motor Valve Console Connections....4-30
Initial Height Sensing Connections....4-32
Optional Power Supply Connections....4-36

Mounting the Machine Torch 4-38
Torch Alignment 4-38

Section 5 OPERATION 5-1
Controls and Indicators 5-2
HT4001 Power Supply Front Panel 5-2
HT4001 Power Supply Rear Panel Control 5-2
Gas Console 5-4
Digital Remote (DR) V/C Module 5-6
Programmable Remote (PR) V/C Module 5-7
Timer/Counter 5-7
Pre-Operation System Checkout 5-8
Final Torch Adjustment 5-11
Daily Start-Up 5-13
How to Optimize Cut Quality 5-15
Tips for Table and Torch 5-15
Plasma Set-up Tips 5-15
Maximize the Life of Consumable Parts 5-15
Additional Factors of Cut Quality 5-16
Additional Improvements 5-17
Common Cutting Faults 5-18
Technical Questions 5-19
Cut Charts 5-19
Cut Chart and Consumable Parts Index 5-20
Changing Consumable Parts 5-33
Removal and Inspection 5-33
Replacement 5-33
Changing the Water Tube 5-35

Section 6 MAINTENANCE 6-1
Introduction 6-2
Routine Maintenance 6-3
Torch and Torch Leads 6-3
Power Supplies 6-3
Gas Console 6-4
Motor Valve Console 6-4
Remote HF Console 6-4
HT4001 Initialization and Sequence of Operation 6-5
Initial Checks 6-11
Troubleshooting 6-14
STATUS LED Troubleshooting 6-20
Chopper Module Test Procedure 6-22
Relay Board PCB4 Status Indicators 6-24
Error Codes 6-28
Torch Coolant Draining 6-30

Section 7 PARTS LIST 7-1
Introduction 7-2
Finding Part Numbers 7-2
HT4001 Interconnection Reference Map 7-3
HT4001 Power Supply
Outside Front Panel 7-5
Inside Front Panel 7-7
Front Bail 7-9
Rear Bail 7-11
Inside Floor 7-13
Rear Wall Inside 7-15
Rear Wall Outside 7-17
Remote High Frequency Console 7-19
Gas Console 7-21
Motor Valve Console 7-23
Remote V/C – Digital Remote (DR) Control Module 7-25
Remote V/C – Programmable (PR) Control Module 7-27
IHS Console 7-29
Timer/Counter 7-30
HT4001 Cables, Leads, Torch Leads and Hoses 7-31
PAC620 Machine Torch Assembly 7-41
Torch Mounting Bracket 7-41
Consumable Parts Kits 7-42
PAC620: HT4001 without Slave, Standard 7-42
PAC620: HT4001 without Slave, Bevel 7-43
PAC620: HT4001 with Slave, Standard 7-44
PAC620: HT4001 with Slave, Bevel 7-45
PAC620: HT4001 CE without Slave, Standard 7-46
PAC620: HT4001 CE with Slave, Standard 7-46
Recommended Spare Parts 7-47
Power Supply 7-47
Remote High Frequency Console 7-47
Gas Console 7-47
IHS System and Components 7-48
IHS Leads Packages and Components 7-48

Section 8 WIRING DIAGRAMS 8-1
Introduction 8-2
Wiring Diagram Symbols 8-2
HT4001 System Wiring Diagrams 8-5

Appendix A H-401 POWER SUPPLY AS SLAVE a-1
H401 Slave Modification a-2
H401 Slave Connections a-6
Connecting the Power a-6

Appendix B AERATION MANIFOLD b-1
Aeration Manifold for Plasma Cutting Aluminum b-2
Introduction b-2
Making an Aeration Manifold b-2

Appendix C ELECTROMAGNETIC COMPATIBILITY c-1
EMC Introduction c-2
General c-3
Power Cable c-3
Connect Power Cable c-3
Power Supply c-3
Line Disconnect Switch c-5
EMI Filter Parts List c-6

Appendix D POWER CABLE INSTALLATION FOR 200/220V POWER SUPPLIES d-1
General d-2
Power Cable d-2
Connect Power Cable d-2
Power Supply d-2
Line Disconnect Switch d-4

Appendix E BENZOTRIAZOLE SAFETY DATA e-1

Appendix F SYSTEM GROUNDING f-1

Section 1

SAFETY

In this section:

Recognize Safety Information....1-2
Follow Safety Instructions....1-2
Cutting Can Cause Fire or Explosion....1-2
Electric Shock Can Kill....1-3
Cutting Can Produce Toxic Fumes....1-3
A Plasma Arc Can Cause Injury and Burns....1-4
Arc Rays Can Burn Eyes and Skin....1-4
Grounding Safety....1-4
Compressed Gas Equipment Safety....1-5
Gas Cylinders Can Explode If Damaged....1-5
Noise Can Damage Hearing....1-5
Pacemaker and Hearing Aid Operation....1-5
A Plasma Arc Can Damage Frozen Pipes....1-5
Additional Safety Information....1-5
Warning Label....1-6

RECOGNIZE SAFETY INFORMATION

The symbols shown in this section are used to identify potential hazards. When you see a safety symbol in this manual or on your machine, understand the potential for personal injury, and follow the related instructions to avoid the hazard.

FOLLOW SAFETY INSTRUCTIONS

Read carefully all safety messages in this manual and safety labels on your machine.

- Keep the safety labels on your machine in good condition. Replace missing or damaged labels immediately.
- Learn how to operate the machine and how to use the controls properly. Do not let anyone operate it without instruction.
- Keep your machine in proper working condition. Unauthorized modifications to the machine may affect safety and machine service life.

DANGER WARNING CAUTION

A signal word DANGER or WARNING is used with a safety symbol. DANGER identifies the most serious hazards.

- DANGER and WARNING safety labels are located on your machine near specific hazards.
- WARNING safety messages precede related instructions in this manual that may result in injury or death if not followed correctly.
- CAUTION safety messages precede related instructions in this manual that may result in damage to equipment if not followed correctly.

CUTTING CAN CAUSE FIRE OR EXPLOSION

Fire Prevention

- Be sure the area is safe before doing any cutting. Keep a fire extinguisher nearby.
- Remove all flammables within 35 feet (10 m) of the cutting area.
- Quench hot metal or allow it to cool before handling or before letting it touch combustible materials.
- Never cut containers with potentially flammable materials inside – they must be emptied and properly cleaned first.
- Ventilate potentially flammable atmospheres before cutting.
- When cutting with oxygen as the plasma gas, an exhaust ventilation system is required.

Explosion Prevention

- Do not use the plasma system if explosive dust or vapors may be present.
- Do not cut pressurized cylinders, pipes, or any closed container.
- Do not cut containers that have held combustible materials.

WARNING

Explosion Hazard
Argon-Hydrogen and Methane

Hydrogen and methane are flammable gases that present an explosion hazard. Keep flames away from cylinders and hoses that contain methane or hydrogen mixtures. Keep flames and sparks away from the torch when using methane or argon-hydrogen plasma.

WARNING

Hydrogen Detonation with Aluminum Cutting

- When cutting aluminum underwater, or with the water touching the underside of the aluminum, free hydrogen gas may collect under the workpiece and detonate during plasma cutting operations.
- Install an aeration manifold on the floor of the water table to eliminate the possibility of hydrogen detonation. Refer to the Appendix section of this manual for aeration manifold details.

ELECTRIC SHOCK CAN KILL

Touching live electrical parts can cause a fatal shock or severe burn.

- Operating the plasma system completes an electrical circuit between the torch and the workpiece. The workpiece and anything touching the workpiece are part of the electrical circuit.
- Never touch the torch body, workpiece or the water in a water table when the plasma system is operating.

Electric Shock Prevention

All Hypertherm plasma systems use high voltage in the cutting process (200 to 400 VDC are common). Take the following precautions when operating this system:

- Wear insulated gloves and boots, and keep your body and clothing dry.
- Do not stand, sit or lie on – or touch – any wet surface when using the plasma system.
- Insulate yourself from work and ground using dry insulating mats or covers big enough to prevent any physical contact with the work or ground. If you must work in or near a damp area, use extreme caution.
- Provide a disconnect switch close to the power supply with properly sized fuses. This switch allows the operator to turn off the power supply quickly in an emergency situation.
- When using a water table, be sure that it is correctly connected to earth ground.
- Install and ground this equipment according to the instruction manual and in accordance with national and local codes.
- Inspect the input power cord frequently for damage or cracking of the cover. Replace a damaged power cord immediately. **Bare wiring can kill.**
- Inspect and replace any worn or damaged torch leads.
- Do not pick up the workpiece, including the waste cutoff, while you cut. Leave the workpiece in place or on the workbench with the work cable attached during the cutting process.
- Before checking, cleaning or changing torch parts, disconnect the main power or unplug the power supply.
- Never bypass or shortcut the safety interlocks.
- Before removing any power supply or system enclosure cover, disconnect electrical input power. Wait 5 minutes after disconnecting the main power to allow capacitors to discharge.
- Never operate the plasma system unless the power supply covers are in place. Exposed power supply connections present a severe electrical hazard.
- When making input connections, attach proper grounding conductor first.
- Each Hypertherm plasma system is designed to be used only with specific Hypertherm torches. Do not substitute other torches which could overheat and present a safety hazard.

CUTTING CAN PRODUCE TOXIC FUMES

Cutting can produce toxic fumes and gases that deplete oxygen and cause injury or death.

- Keep the cutting area well ventilated or use an approved air-supplied respirator.
- Do not cut in locations near degreasing, cleaning or spraying operations. The vapors from certain chlorinated solvents decompose to form phosgene gas when exposed to ultraviolet radiation.
- Do not cut metal coated or containing toxic materials, such as zinc (galvanized), lead, cadmium or beryllium, unless the area is well ventilated and the operator wears an air-supplied respirator. The coatings and any metals containing these elements can produce toxic fumes when cut.
- Never cut containers with potentially toxic materials inside – they must be emptied and properly cleaned first.
- This product, when used for welding or cutting, produces fumes or gases which contain chemicals known to the State of California to cause birth defects and, in some cases, cancer.

A PLASMA ARC CAN CAUSE INJURY AND BURNS

Instant-On Torches
Plasma arc comes on immediately when the torch switch is activated.

The plasma arc will cut quickly through gloves and skin.
- Keep away from the torch tip.
- Do not hold metal near the cutting path.
- Never point the torch toward yourself or others.

ARC RAYS CAN BURN EYES AND SKIN

Eye Protection Plasma arc rays produce intense visible and invisible (ultraviolet and infrared) rays that can burn eyes and skin.
- Use eye protection in accordance with applicable national or local codes.
- Wear eye protection (safety glasses or goggles with side shields, and a welding helmet) with appropriate lens shading to protect your eyes from the arc's ultraviolet and infrared rays.

Arc Current	Lens Shade AWS (USA)	Lens Shade ISO 4850
Up to 100 A	No. 8	No. 11
100-200 A	No. 10	No. 11-12
200-400 A	No. 12	No. 13
Over 400 A	No. 14	No. 14

Skin Protection Wear protective clothing to protect against burns caused by ultraviolet light, sparks and hot metal.
- Gauntlet gloves, safety shoes and hat.
- Flame-retardant clothing to cover all exposed areas.
- Cuffless trousers to prevent entry of sparks and slag.
- Remove any combustibles, such as a butane lighter or matches, from your pockets before cutting.

Cutting Area Prepare the cutting area to reduce reflection and transmission of ultraviolet light:
- Paint walls and other surfaces with dark colors to reduce reflection.
- Use protective screens or barriers to protect others from flash and glare.
- Warn others not to watch the arc. Use placards or signs.

GROUNDING SAFETY

Work Cable Attach the work cable securely to the workpiece or the work table with good metal-to-metal contact. Do not connect it to the piece that will fall away when the cut is complete.

Work Table Connect the work table to an earth ground, in accordance with appropriate national or local electrical codes.

Input Power
- Be sure to connect the power cord ground wire to the ground in the disconnect box.
- If installation of the plasma system involves connecting the power cord to the power supply, be sure to connect the power cord ground wire properly.
- Place the power cord's ground wire on the stud first, then place any other ground wires on top of the power cord ground. Fasten the retaining nut tightly.
- Tighten all electrical connections to avoid excessive heating.

COMPRESSED GAS EQUIPMENT SAFETY

- Never lubricate cylinder valves or regulators with oil or grease.
- Use only correct gas cylinders, regulators, hoses and fittings designed for the specific application.
- Maintain all compressed gas equipment and associated parts in good condition.
- Label and color-code all gas hoses to identify the type of gas in each hose. Consult applicable national or local codes.

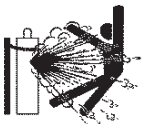

GAS CYLINDERS CAN EXPLODE IF DAMAGED

Gas cylinders contain gas under high pressure. If damaged, a cylinder can explode.

- Handle and use compressed gas cylinders in accordance with applicable national or local codes.
- Never use a cylinder that is not upright and secured in place.
- Keep the protective cap in place over valve except when the cylinder is in use or connected for use.
- Never allow electrical contact between the plasma arc and a cylinder.
- Never expose cylinders to excessive heat, sparks, slag or open flame.
- Never use a hammer, wrench or other tool to open a stuck cylinder valve.

NOISE CAN DAMAGE HEARING

Prolonged exposure to noise from cutting or gouging can damage hearing.

- Use approved ear protection when using plasma system.
- Warn others nearby about the noise hazard.

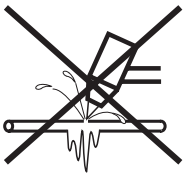

A PLASMA ARC CAN DAMAGE FROZEN PIPES

Frozen pipes may be damaged or can burst if you attempt to thaw them with a plasma torch.

PACEMAKER AND HEARING AID OPERATION

Pacemaker and hearing aid operation can be affected by magnetic fields from high currents.
Pacemaker and hearing aid wearers should consult a doctor before going near any plasma arc cutting and gouging operations.

To reduce magnetic field hazards:

- Keep both the work cable and the torch lead to one side, away from your body.
- Route the torch leads as close as possible to the work cable.
- Do not wrap or drape the torch lead or work cable around your body.
- Keep as far away from the power supply as possible.

ADDITIONAL SAFETY INFORMATION

1. ANSI Standard Z49.1, *Safety in Welding and Cutting,* American Welding Society, 550 LeJeune Road P.O. Box 351020, Miami, FL 33135
2. ANSI Standard Z49.2, *Fire Prevention in the Use of Cutting and Welding Processes,* American National Standards Institute 1430 Broadway, New York, NY 10018
3. ANSI Standard Z87.1, *Safe Practices for Occupation and Educational Eye and Face Protection,* American National Standards Institute, 1430 Broadway, New York, NY 10018
4. AWS F4.1, *Recommended Safe Practices for the Preparation for Welding and Cutting of Containers and Piping That Have Held Hazardous Substances,* American Welding Society 550 LeJeune Road, P.O. Box 351040, Miami, FL 33135
5. AWS F5.2, *Recommended Safe Practices for Plasma Arc Cutting,* American Welding Society 550 LeJeune Road, P.O. Box 351040, Miami, FL 33135
6. CGA Pamphlet P-1, *Safe Handling of Compressed Gases in Cylinders,* Compressed Gas Association 1235 Jefferson Davis Highway, Arlington, VA 22202
7. CSA Standard W117.2, *Code for Safety in Welding and Cutting,* Canadian Standards Association Standard Sales 178 Rexdale Boulevard, Rexdale, Ontario M9W 1R3, Canada
8. NFPA Standard 51B, *Cutting and Welding Processes,* National Fire Protection Association 470 Atlantic Avenue, Boston, MA 02210
9. NFPA Standard 70–1978, *National Electrical Code,* National Fire Protection Association, 470 Atlantic Avenue, Boston, MA 02210
10. OSHA, *Safety and Health Standards,* 29FR 1910 U.S. Government Printing Office, Washington, D.C. 20402

WARNING LABEL

This warning label is affixed to some power supplies. It is important that the operator and maintenance technician understand the intent of these warning symbols as described. The numbered text corresponds to the numbered boxes on the label.

1. Cutting sparks can cause explosion or fire.

1.1 Keep flammables away from cutting.

1.2 Keep a fire extinguisher nearby, and have a watchperson ready to use it.

1.3 Do not cut on any closed containers.

2. The plasma arc can cause injury and burns.

2.1 Turn off power before disassembling torch.

2.2 Do not hold the material near cutting path.

2.3 Wear complete body protection.

3. Electric shock from torch or wiring can kill. Protect yourself from electric shock.

3.1 Wear insulating gloves. Do not wear wet or damaged gloves.

3.2 Insulate yourself from work and ground.

3.3 Disconnect input plug or power before working on machine.

4. Breathing cutting fumes can be hazardous to your health.

4.1 Keep your head out of the fumes.

4.2 Use forced ventilation or local exhaust to remove the fumes.

4.3 Use ventilating fan to remove the fumes.

5. Arc rays can burn eyes and injure skin.

5.1 Wear hat and safety glasses. Use ear protection and button shirt collar. Use welding helmet with correct shade of filter. Wear complete body protection.

6. Become trained and read the instructions before working on the machine or cutting.

7. Do not remove or paint over (cover) warning labels.

Hypertherm

Section 1a

SÉCURITÉ

Dans cette section :

Identifier les consignes de sécurité....1a-2
Suivre les instructions de sécurité....1a-2
Danger Avertissement Précaution....1a-2
Le coupage peut provoquer un incendie ou une explosion....1a-2
Prévention des incendies, Prévention des explosions....1a-2
Risque d'explosion argon-hydrogène et méthane....1a-2
Détonation de l'hydrogène lors du coupage de l'aluminium....1a-2
Les chocs électriques peuvent être fatals....1a-3
Prévention des chocs électriques....1a-3
Le coupage peut produire des vapeurs toxiques....1a-3
L'arc plasma peut provoquer des blessures ou des brûlures....1a-4
Torches à allumage instantané....1a-4
Les rayons de l'arc peuvent brûler les yeux et la peau....1a-4
Protection des yeux, Protection de la peau, Zone de coupage....1a-4
Mise à la masse et à la terre....1a-4
Câble de retour, Table de travail, Alimentation....1a-4
Sécurité des bouteilles de gaz comprimé....1a-5
Les bouteilles de gaz comprimé peuvent exploser en cas de dommages....1a-5
Le bruit peut provoquer des problèmes auditifs....1a-5
Pacemakers et prothèses auditives....1a-5
Un arc plasma peut endommager les tuyaux gelés....1a-5
Étiquette de sécurité....1a-6

IDENTIFIER LES CONSIGNES DE SÉCURITÉ

Les symboles indiqués dans cette section sont utilisés pour identifier les risques éventuels. Si vous trouvez un symbole de sécurité, que ce soit dans ce manuel ou sur l'équipement, soyez conscient des risques de blessures et suivez les instructions correspondantes afin d'éviter ces risques.

SUIVRE LES INSTRUCTIONS DE SÉCURITÉ

Lire attentivement toutes les consignes de sécurité dans le présent manuel et sur les étiquettes de sécurité se trouvant sur la machine.

- Les étiquettes de sécurité doivent rester lisibles. Remplacer immédiatement les étiquettes manquantes ou abîmées.
- Apprendre à faire fonctionner la machine et à utiliser correctement les commandes. Ne laisser personne utiliser la machine sans connaître son fonctionnement.
- Garder la machine en bon état. Des modifications non autorisées sur la machine peuvent engendrer des problèmes de sécurité et raccourcir la durée d'utilisation de l'équipement.

DANGER AVERTISSEMENT PRÉCAUTION

Les signaux DANGER ou AVERTISSEMENT sont utilisés avec un symbole de sécurité, DANGER correspondant aux risques les plus sérieux.

- Les étiquettes de sécurité DANGER et AVERTISSEMENT sont situées sur la machine pour signaler certains dangers spécifiques.
- Les messages d'AVERTISSEMENT précèdent les instructions d'utilisation expliquées dans ce manuel et signalent les risques de blessures ou de mort au cas où ces instructions ne seraient pas suivies correctement.
- Les messages de PRÉCAUTION précèdent les instructions d'utilisation contenues dans ce manuel et signalent que le matériel risque d'être endommagé si les instructions ne sont pas suivies correctement.

LE COUPAGE PEUT PROVOQUER UN INCENDIE OU UNE EXPLOSION

Prévention des incendies

- Avant de commencer, s'assurer que la zone de coupage ne présente aucun danger. Conserver un extincteur à proximité.
- Éloigner toute matière inflammable à une distance d'au moins 10 m du poste de coupage.
- Tremper le métal chaud ou le laisser refroidir avant de le manipuler ou avant de le mettre en contact avec des matériaux combustibles.
- Ne jamais couper des récipients pouvant contenir des matières inflammables avant de les avoir vidés et nettoyés correctement.
- Aérer toute atmosphère potentiellement inflammable avant d'utiliser un système plasma.
- Lors de l'utilisation d'oxygène comme gaz plasma, un système de ventilation par aspiration est nécessaire.

Prévention des explosions

- Ne pas couper en présence de poussière ou de vapeurs.
- Ne pas couper de bouteilles, de tuyaux ou autres récipients fermés et pressurisés.
- Ne pas couper de récipients contenant des matières combustibles.

AVERTISSEMENT

Risque d'explosion
argon-hydrogène et méthane

L'hydrogène et le méthane sont des gaz inflammables et potentiellement explosifs. Conserver à l'écart de toute flamme les bouteilles et tuyaux contenant des mélanges à base d'hydrogène ou de méthane. Maintenir toute flamme et étincelle à l'écart de la torche lors de l'utilisation d'un plasma d'argon-hydrogène ou de méthane.

AVERTISSEMENT

Détonation de l'hydrogène lors du coupage de l'aluminium

- Lors du coupage de l'aluminium sous l'eau, ou si l'eau touche la partie inférieure de la pièce d'aluminium, de l'hydrogène libre peut s'accumuler sous la pièce à couper et détonner lors du coupage plasma.
- Installer un collecteur d'aération au fond de la table à eau afin d'éliminer les risques de détonation de l'hydrogène. Se référer à l'annexe du manuel pour plus de renseignements sur les collecteurs d'aération.

LES CHOCS ÉLECTRIQUES PEUVENT ÊTRE FATALS

Toucher une pièce électrique sous tension peut provoquer un choc électrique fatal ou des brûlures graves.

- La mise en fonctionnement du système plasma ferme un circuit électrique entre la torche et la pièce à couper. La pièce à couper et tout autre élément en contact avec cette pièce font partie du circuit électrique.
- Ne jamais toucher le corps de la torche, la pièce à couper ou l'eau de la table à eau pendant le fonctionnement du système plasma.

Prévention des chocs électriques

Tous les systèmes plasma Hypertherm utilisent des hautes tensions pour le coupage (souvent de 200 à 400 V). On doit prendre les précautions suivantes quand on utilise le système plasma :

- Porter des bottes et des gants isolants et garder le corps et les vêtements au sec.
- Ne pas se tenir, s'asseoir ou se coucher sur une surface mouillée, ni la toucher quand on utilise le système plasma.
- S'isoler de la surface de travail et du sol en utilisant des tapis isolants secs ou des couvertures assez grandes pour éviter tout contact physique avec le travail ou le sol. S'il s'avère nécessaire de travailler dans ou près d'un endroit humide, procéder avec une extrême prudence.
- Installer un sectionneur avec fusibles appropriés, à proximité de la source de courant. Ce dispositif permet à l'opérateur d'arrêter rapidement la source de courant en cas d'urgence.
- En cas d'utilisation d'une table à eau, s'assurer que cette dernière est correctement mise à la terre.
- Installer et mettre à la terre l'équipement selon les instructions du présent manuel et conformément aux codes électriques locaux et nationaux.
- Inspecter fréquemment le cordon d'alimentation primaire pour s'assurer qu'il n'est ni endommagé, ni fendu. Remplacer immédiatement un cordon endommagé. **Un câble dénudé peut tuer**.
- Inspecter et remplacer les câbles de la torche qui sont usés ou endommagés.
- Ne pas saisir la pièce à couper ni les chutes lors du coupage. Laisser la pièce à couper en place ou sur la table de travail, le câble de retour connecté lors du coupage.
- Avant de vérifier, de nettoyer ou de remplacer les pièces de la torche, couper l'alimentation ou débrancher la prise de courant.
- Ne jamais contourner ou court-circuiter les verrouillages de sécurité.
- Avant d'enlever le capot du système ou de la source de courant, couper l'alimentation électrique. Attendre ensuite 5 minutes pour que les condensateurs se déchargent.
- Ne jamais faire fonctionner le système plasma sans que les capots de la source de courant ne soient en place. Les raccords exposés de la source de courant sont extrêmement dangereux.
- Lors de l'installation des connexions, attacher tout d'abord la prise de terre appropriée.
- Chaque système plasma Hypertherm est conçu pour être utilisé uniquement avec des torches Hypertherm spécifiques. Ne pas utiliser des torches inappropriées qui pourraient surchauffer et présenter des risques pour la sécurité.

LE COUPAGE PEUT PRODUIRE DES VAPEURS TOXIQUES

Le coupage peut produire des vapeurs et des gaz toxiques qui réduisent le niveau d'oxygène dans l'air et peuvent provoquer des blessures, voire la mort.

- Conserver le poste de coupage bien aéré ou utiliser un masque respiratoire homologué.
- Ne pas procéder au coupage près d'endroits où s'effectuent le dégraissage, le nettoyage ou la vaporisation. Certains solvants chlorés se décomposent sous l'effet des rayons ultraviolets et forment du phosgène.
- Ne pas couper des métaux peints ou contenant des matières toxiques comme le zinc (galvanisé), le plomb, le cadmium ou le béryllium, à moins que la zone de travail soit très bien ventilée et que l'opérateur porte un masque respiratoire. Les revêtements et métaux contenant ces matières peuvent produire des vapeurs toxiques lors du coupage.
- Ne jamais couper de récipients pouvant contenir des matières inflammables avant de les avoir vidés et nettoyés correctement.
- Quand on utilise ce produit pour le soudage ou le coupage, il dégage des fumées et des gaz qui contiennent des produits chimiques qui, selon l'État de Californie, provoquent des anomalies congénitales et, dans certains cas, le cancer.

L'ARC PLASMA PEUT PROVOQUER DES BLESSURES OU DES BRÛLURES

Torches à allumage instantané

L'arc plasma s'allume immédiatement après que la torche soit mise en marche.

L'arc plasma coupe facilement les gants et la peau.

- Rester éloigné de l'extrémité de la torche.
- Ne pas tenir de métal près de la trajectoire de coupe.
- Ne jamais pointer la torche vers soi ou d'autres personnes.

LES RAYONS DE L'ARC PEUVENT BRÛLER LES YEUX ET LA PEAU

Protection des yeux Les rayons de l'arc plasma produisent de puissants rayons visibles ou invisibles (ultraviolets et infrarouges) qui peuvent brûler les yeux et la peau.

- Utiliser des lunettes de sécurité conformément aux codes locaux ou nationaux en vigueur.
- Porter des lunettes de protection (lunettes ou masque muni d'écrans latéraux et encore masque de soudure) avec des verres teintés appropriés pour protéger les yeux des rayons ultraviolets et infrarouges de l'arc.

Courant de l'arc	Puissance des verres teintés AWS (É.-U.)	ISO 4850
Jusqu'à 100 A	N° 8	N° 11
100-200 A	N° 10	N° 11-12
200-400 A	N° 12	N° 13
Plus de 400 A	N° 14	N° 14

Protection de la peau Porter des vêtements de sécurité pour se protéger contre les brûlures que peuvent causer les rayons ultraviolets, les étincelles et le métal brûlant :

- Gants à crispin, chaussures et casque de sécurité.
- Vêtements ignifuges couvrant toutes les parties exposées du corps.
- Pantalon sans revers pour éviter que des étincelles ou des scories puissent s'y loger.
- Avant le coupage, retirer de ses poches tout objet combustible comme les briquets au butane ou les allumettes.

Zone de coupage Préparer la zone de coupage afin de réduire la réverbération et la transmission de la lumière ultraviolette :

- Peindre les murs et autres surfaces de couleur sombre pour réduire la réflexion de la lumière.
- Utiliser des écrans et autres dispositifs de protection afin de protéger les autres personnes de la lumière et de la réverbération.
- Prévenir les autres personnes de ne pas regarder l'arc. Utiliser des affiches ou des panneaux.

MISE À LA MASSE ET À LA TERRE

Câble de retour Bien fixer le câble de retour (ou de masse) à la pièce à couper ou à la table de travail de façon à assurer un bon contact métal-métal. Ne pas fixer le câble de retour à la partie de la pièce qui doit se détacher.

Table de travail Raccorder la table de travail à la terre, conformément aux codes de sécurité locaux ou nationaux appropriés.

Alimentation

- S'assurer que le fil de terre du cordon d'alimentation est connecté à la terre dans le coffret du sectionneur.
- S'il est nécessaire de brancher le cordon d'alimentation à la source de courant lors de l'installation du système, s'assurer que le fil de terre est correctement branché.
- Placer tout d'abord le fil de terre du cordon d'alimentation sur le plot de mise à la terre puis placer les autres fils de terre par-dessus. Bien serrer l'écrou de retenue.
- S'assurer que toutes les connexions sont bien serrées pour éviter la surchauffe.

SÉCURITÉ DES BOUTEILLES DE GAZ COMPRIMÉ

- Ne jamais lubrifier les robinets des bouteilles ou les régulateurs avec de l'huile ou de la graisse.
- Utiliser uniquement les bouteilles, régulateurs, tuyaux et accessoires appropriés et conçus pour chaque application spécifique.
- Entretenir l'équipement et les pièces d'équipement à gaz comprimé afin de les garder en bon état.
- Étiqueter et coder avec des couleurs tous les tuyaux de gaz afin d'identifier le type de gaz contenu dans chaque tuyau. Se référer aux codes locaux ou nationaux en vigueur.

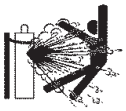

LES BOUTEILLES DE GAZ COMPRIMÉ PEUVENT EXPLOSER EN CAS DE DOMMAGES

Les bouteilles de gaz contiennent du gaz à haute pression. Si une bouteille est endommagée, elle peut exploser.

- Manipuler et utiliser les bouteilles de gaz comprimé conformément aux codes locaux ou nationaux.
- Ne jamais utiliser une bouteille qui n'est pas placée à la verticale et bien assujettie.
- Le capuchon de protection doit être placé sur le robinet sauf si la bouteille est en cours d'utilisation ou connectée pour utilisation.
- Éviter à tout prix le contact électrique entre l'arc plasma et une bouteille.
- Ne jamais exposer des bouteilles à une chaleur excessive, aux étincelles, aux scories ou aux flammes nues.
- Ne jamais utiliser des marteaux, des clés ou d'autres outils pour débloquer le robinet des bouteilles.

LE BRUIT PEUT PROVOQUER DES PROBLÈMES AUDITIFS

Une exposition prolongée au bruit du coupage ou du gougeage peut provoquer des problèmes auditifs.

- Utiliser un casque de protection homologué lors de l'utilisation du système plasma.
- Prévenir les personnes aux alentours des risques encourus en cas d'exposition au bruit.

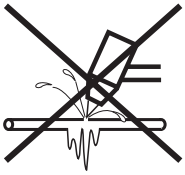

UN ARC PLASMA PEUT ENDOMMAGER LES TUYAUX GELÉS

Les tuyaux gelés peuvent être endommagés ou éclater si l'on essaie de les dégeler avec une torche plasma.

PACEMAKERS ET PROTHÈSES AUDITIVES

Les champs magnétiques produits par les courants à haute tension peuvent affecter le fonctionnement des prothèses auditives et des pacemakers. Les personnes portant ce type d'appareil doivent consulter un médecin avant de s'approcher d'un lieu où s'effectue le coupage ou le gougeage plasma.

Pour réduire les risques associés aux champs magnétiques :

- Garder loin de soi et du même côté du corps le câble de retour et le faisceau de la torche.
- Faire passer le faisceau de la torche le plus près possible du câble de retour.
- Ne pas s'enrouler le faisceau de la torche ou le câble de retour autour du corps.
- Se tenir le plus loin possible de la source de courant.

Étiquette de sécurité

Cette étiquette est affichée sur la source de courant. Il est important que l'utilisateur et le technicien de maintenance comprennent la signification des symboles de sécurité. Les numéros de la liste correspondent aux numéros des images.

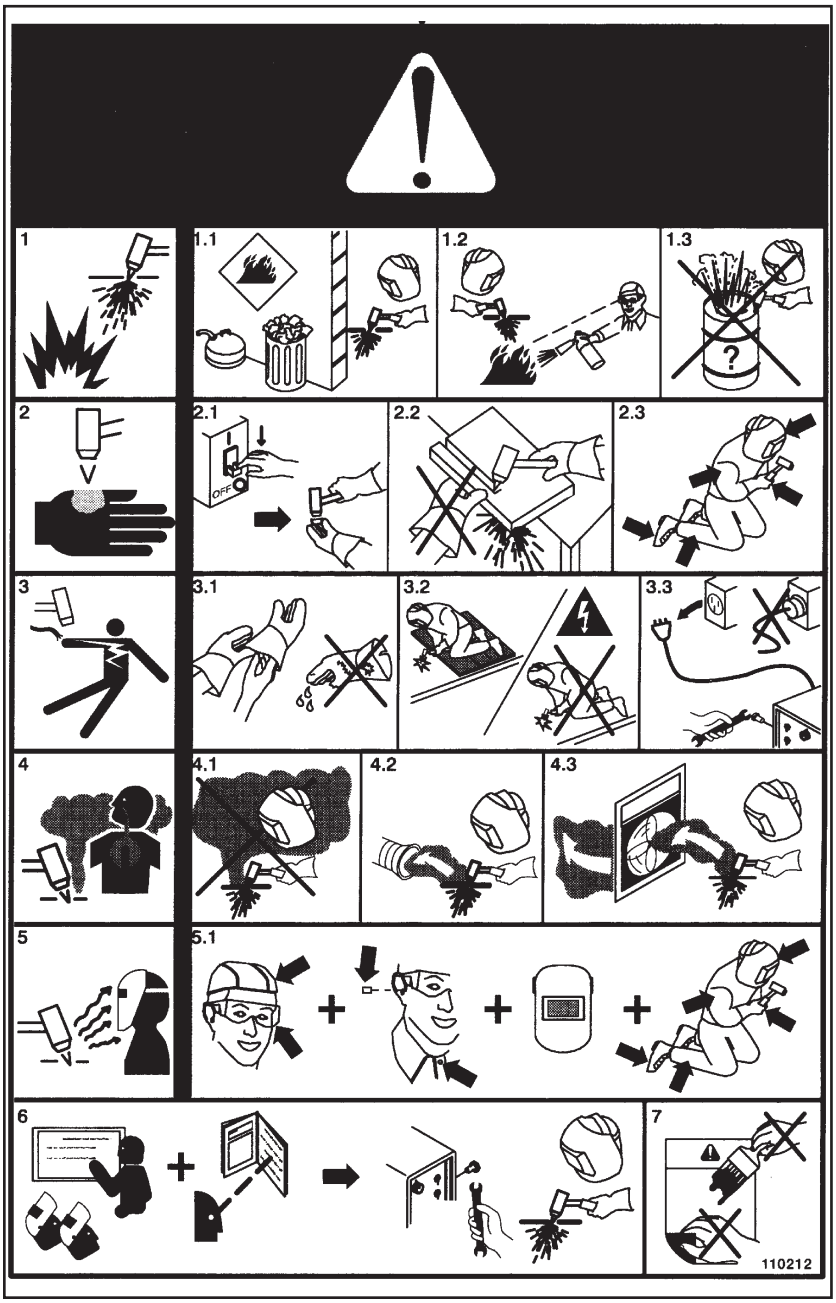

1. Les étincelles produites par le coupage peuvent provoquer une explosion ou un incendie.

1.1 Pendant le coupage, éloigner toute matière inflammable.

1.2 Conserver un extincteur à proximité et s'assurer qu'une personne soit prête à l'utiliser.

1.3 Ne jamais couper de récipients fermés.

2. L'arc plasma peut provoquer des blessures et des brûlures.

2.1 Couper l'alimentation avant de démonter la torche.

2.2 Ne pas tenir la surface à couper près de la trajectoire de coupe.

2.3 Porter des vêtements de protection couvrant tout le corps.

3. Un choc électrique causé par la torche ou les câbles peut être fatal. Se protéger contre les risques de chocs électriques.

3.1 Porter des gants isolants. Ne pas porter de gants mouillés ou abîmés.

3.2 S'isoler de la surface de travail et du sol.

3.3 Débrancher la prise ou la source de courant avant de manipuler l'équipement.

4. L'inhalation des vapeurs produites par le coupage peut être dangereuse pour la santé.

4.1 Garder le visage à l'écart des vapeurs.

4.2 Utiliser un système de ventilation par aspiration ou d'échappement localisé pour dissiper les vapeurs.

4.3 Utiliser un ventilateur pour dissiper les vapeurs.

5. Les rayons de l'arc peuvent brûler les yeux et provoquer des lésions de la peau.

5.1 Porter un casque et des lunettes de sécurité. Se protéger les oreilles et porter une chemise dont le col peut être déboutonné. Porter un casque de soudure dont la protection filtrante est suffisante. Porter des vêtements protecteurs couvrant la totalité du corps.

6. Se former à la technique du coupage et lire les instructions avant de manipuler l'équipement ou de procéder au coupage.

7. Ne pas retirer ou peindre (recouvrir) les étiquettes de sécurité.

Hypertherm

Section 2

SPECIFICATIONS

In this section:

Description 2-2
- HT4001 Power supply 2-2
- Remote High Frequency (RHF) Console 2-2
- Gas Console 2-3
- Motor Valve Console 2-3
- Remote Voltage/Current (V/C) Control – Optional 2-3
- Timer/Counter – Optional 2-4
- Water Chiller – Optional 2-4
- Initial Height Sensing (IHS) – Optional 2-4
- H401 Slave Power Supply – Optional 2-4
- Water Muffler – Optional 2-4

Specifications 2-5
- System Requirements 2-5
- HT4001 Power Supply 2-5
- HT4001 Power Supply with Slave 2-5
- PAC620 Machine Torches 2-7
- Remote High Frequency Console 2-8
- Digital Remote (DR) V/C Control 2-9
- Programmable Remote (PR) V/C Control 2-9
- Gas Console 2-10
- Motor Valve Console 2-10
- Initial Height Sensing 2-11
- Timer/Counter 2-11
- Water Chiller 2-12
- H401 Power Supply 2-12
- Water Muffler 2-12

IEC Symbols Used 2-13

Description

Hypertherm's HT4001 is a machine-mounted plasma cutting system for cutting most metals from gauge to three-inch (76 mm) thick (when used with the optional slave configuration). A micro-controller on the power supply control board helps to provide extended life for the oxygen consumable parts. To achieve consumable long life, **all cuts must begin and end on the plate surface** when cutting with oxygen as the plasma gas; this allows for the proper ramping of gases and DC current to extend the life of the torch nozzle and electrode. See also *How to get Longer Consumable Life* in **Section 5**.

The HT4001 power supply provides continuously variable output current of up to 400 amps for optimum cutting on all thicknesses of metal up to two-inches thick. When configured with a slave power supply, the HT4001 system provides continuously variable output current of up to 760 amps for cutting metal up to three-inches thick. This allows the operator wide variations in cutting speeds on the same thickness of metal. Five nozzle sizes produce high-quality cuts throughout the range of cut thicknesses.

The plasma gases used with the HT4001 system are oxygen, for cutting mild steel, and nitrogen, for cutting stainless steel, aluminum and other non-ferrous materials.

The following descriptions briefly describe the purpose and configuration of the HT4001 System components.

HT4001 Power Supply

This unit houses four 100-amp, 15 kHz chopper power supplies to produce constant current DC output. Also located in this unit is the torch height control (THC). The power supply interconnects with the remote high frequency console, initial height sensing, computer interface, remote voltage/current, water muffler, gas console, the timer-counter, the workpiece, other HT4001 supplies (for multi-torch use) and optional slave unit (to output up to 750 Amps).

Remote High Frequency (RHF) Console

This unit houses the high-frequency starting circuit that initializes the plasma arc at the torch. Having the high-frequency circuit in its own enclosure permits more effective RF shielding and allows the power supply to be installed at a distance of up to 300 feet (91.5 m) from the torch. Also located in the console are two door interlock switches, a cooling water flow switch, injection water flow switch, the pilot arc relay and injection water valve. The RHF console interfaces with the power supply, gas console, water chiller, and the torch.

Gas Console

This unit houses control components for plasma gas and injection water flow. The gas console interfaces with the gas supplies, the RHF console, the motor valve console, the power supply and the torch.

Motor Valve Console

This unit houses a plasma gas metering valve and a preflow/operate solenoid valve. These valves allow the flow of gases to be unaffected by the length of the torch leads. Plasma gas lines and an interface cable connect the motor valve console to the gas console. The motor valve console also interfaces with the torch.

Note: The motor valve console must be mounted within 10 feet (3 m) of the torch.

Remote Voltage/Current (V/C) Control – Optional

The digital and programmable remotes provide accurate operator control of the arc voltage and current. High intensity LED displays indicate the setpoints for volts and amperes prior to starting the arc. After the arc is initiated, the displays automatically indicate the actual values of the voltage and current reached. The current remote does not come with LED displays: a thumbwheel switch is provided to set current only. These units interface with the power supply.

Digital Remote – Includes:

- Voltage and current displays and two potentiometers to select the desired values.

This unit is designed for use with guidance machinery that already includes plasma control switches.

Programmable Remote – Includes:

- Voltage and current displays.

No switches or potentiometers included. All functions controlled by the guidance machinery computer.

Current Remote – Used with HT4001 systems without THC. Includes:

- Thumbwheel switch for setting cutting current.

Note: See IM191 RCC Installation for more information on the Current Remote.

Timer/Counter – Optional

The timer/counter monitors the number of arc starts and arc time on. This unit interfaces with the power supply.

Water Chiller – Optional

The water chiller for the HT4001 system is a refrigeration unit capable of reducing the water supply temperature and increasing the water pressure to the RHF console. Reducing the water temperature greatly increases the life of the nozzle and electrode. The water chiller requires a water supply and may also require a water softener. See *Water Supply Requirements* in the **Pre-Installation** section of this manual. This three-phase power system interfaces with the RHF console.

Refer also to Water Chiller Model D Instruction Manual (802410).

Initial Height Sensing (IHS) – Optional

This unit, used with two inductive probes, automatically detects the workpiece surface and indexes the torch to the pierce position. This system is used for underwater, at the water line, or above-water applications. This unit interfaces with the power supply and requires an air supply to operate.

H401 Slave Power Supply – Optional

This unit can function as a “slave” when paralleled with the HT4001 power supply, providing up to 750 amps of current for the HT4001 system.

Refer also to H401 & H601 Instruction Manual IM41 (800410).

Water Muffler – Optional

The water muffler for the HT4001 system reduces radiated light, noise, and captures fumes and particles generated during the cut process. The water muffler is used to cut both at water and below water levels. The water muffler requires an air supply and a water supply.

Refer to the Water Muffler Instruction Manual (801730) for more detailed information.

Specifications

System Requirements

Power Requirements:
Refer to HT4001 Power Supply specifications below:

Gas Requirements:

Plasma Gas Types	Oxygen (O_2), Nitrogen (N_2)
Gas Quality	
Oxygen	99.5%
Nitrogen	99.995%
Oxygen Gas Inlet Pressure	120 psi +/- 10 psi (8.3 bar +/- 0.7 bar)
Nitrogen Gas Inlet Pressure	150 psi +/- 10 psi (10.3 bar +/- 0.7 bar)
Air Gas Inlet Pressure (for Wtr Muffler and IHS)	120 psi (8.3 bar)

Water Requirements:

Water Flow	0.5 gpm (1.9 l/m) to water chiller 2.5 gpm (9.5 l/m) to RHF console
Water Inlet Pressure	35 psi (2.4 bar) to water chiller 150 psi (10.3 bar) to RHF console

HT4001 Power Supply

Maximum OCV (U_0)	361 VDC
Maximum Output Current (I_2)	400 A
Output Voltage (U_2)	80-200 VDC
Duty Cycle Rating (X)	100% @ 40°C at 400 A and 200 V
Ambient Temperatures/Duty Cycle	Power supplies will operate between +14° and 104°F (-10° and +40°C). Power supplies operated in an ambient temperature above 86°F (30°C) may show some decrease in duty cycle.
Power Factor ($\cos\varphi$)	0.94
Cooling	Forced Air (Class F)

HT4001 Power Supply – with Slave

Maximum OCV (U_0)	400 VDC
Maximum Output Current (I_2)	760 A
Output Voltage (U_2)	80-200 VDC
Duty Cycle Rating (X)	100% @ 40°C at 760 A and 200 V
Ambient Temperatures/Duty Cycle	Power supplies will operate between +14° and 104°F (-10° and +40°C). Power supplies operated in an ambient temperature above 86°F (30°C) may show some decrease in duty cycle.
Cooling	Forced Air (Class F)

See instruction manual 800410: H401 & H601 for further specifications on the H401 slave power supply.

HT4001 Power Supply Input Power: (U_1 - Input voltage; I_1 - Input current)

077002 with THC / **077016** without THC.....200 VAC (U_1), 3Ø, 50-60 Hz @ 257A (I_1)
220 VAC (U_1), 3Ø, 50-60 Hz @ 234A (I_1)

077003 with THC / **077017** without THC.....380 VAC (U_1), 3Ø, 50-60 Hz @ 135A (I_1)
400 VAC (U_1), 3Ø, 50-60 Hz @ 128A (I_1)
415 VAC (U_1), 3Ø, 50-60 Hz @ 124A (I_1)

077022 with THC / **077023** without THC.....400 VAC (U_1), CE, 3Ø, 50-60 Hz @ 128A (I_1)

077031 with THC / **077030** without THC.....440 VAC (U_1), 3Ø, 50 Hz @ 117A (I_1)
480 VAC (U_1), 3Ø, 50 Hz @ 107A (I_1)

077004 with THC / **077018** without THC.....240 VAC (U_1), 3Ø, 60 Hz @ 214A (I_1)
480 VAC (U_1), 3Ø, 60 Hz @ 107A (I_1)

077005 with THC / **077019** without THC.....575 VAC (U_1), 3Ø, 60 Hz @ 89A (I_1)
600 VAC (U_1), 3Ø, 60 Hz @ 86A (I_1)

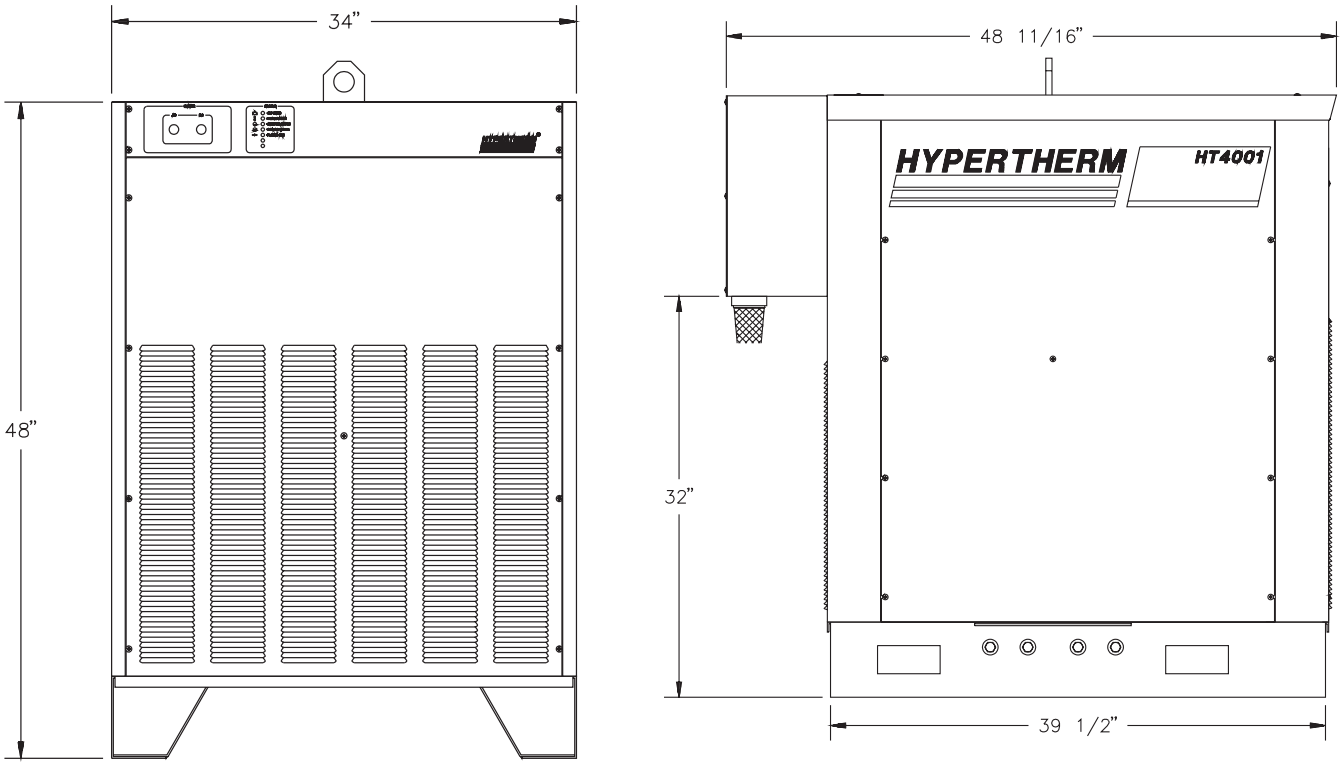

Figure 2-1 Overall Dimensions – HT4001 Power Supply

Dimensions and Weight:
Width .....34" (863 mm)
Maximum Height .....51" (1295 mm); 63" (1600 mm) on CE units and 200/220V units
Maximum Depth .....48-11/16" (1236 mm)
Weight .....1800 lbs (817 kg); 1850 lbs (840 kg) on CE units

PAC620 Machine Torches (028507 – Standard / 028741 – Bevel)

WARNING

CE countries must operate the PAC620 machine torch using a special CE retaining cap in order to comply with CE regulations. Part numbers for the CE retaining caps are indicated in the cut charts (Section 5).

Maximum cutting thickness .....See Cut Charts for details.
Maximum current at 100% duty cycle .....760 A

Plasma Gas Flow .....Oxygen – 114 scfh (54 l/min)
Nitrogen – 223 scfh (105 l/min)
Injection Water Flow Rate .....0.38 to 0.48 gpm (1.4 to 1.8 l/min)
Water coolant flow rate (max.) .....1.7 gpm (6.4 l/min)

Dimensions and Weight:
Diameter.....2" (50 mm)
Length .....17.15" (435 mm) standard;
15.37" (390 mm) bevel
Weight .....3-1/2 lbs (1.58 kg)

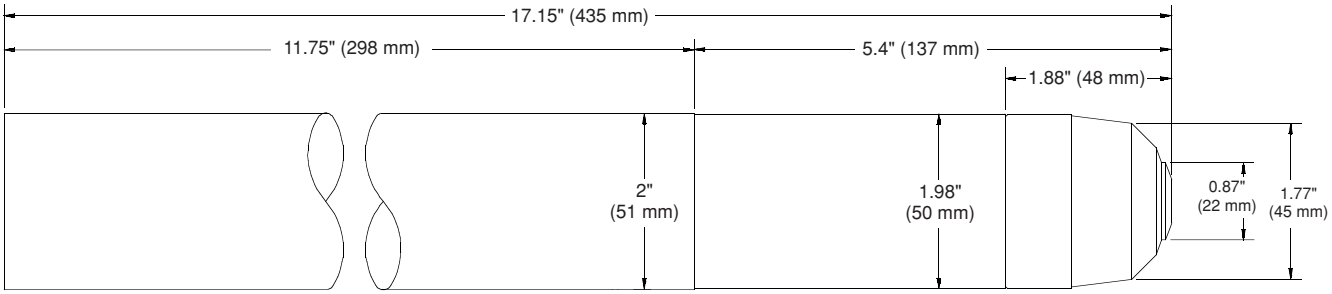

Figure 2-2 PAC620 Standard Torch Assembly with Dimensions

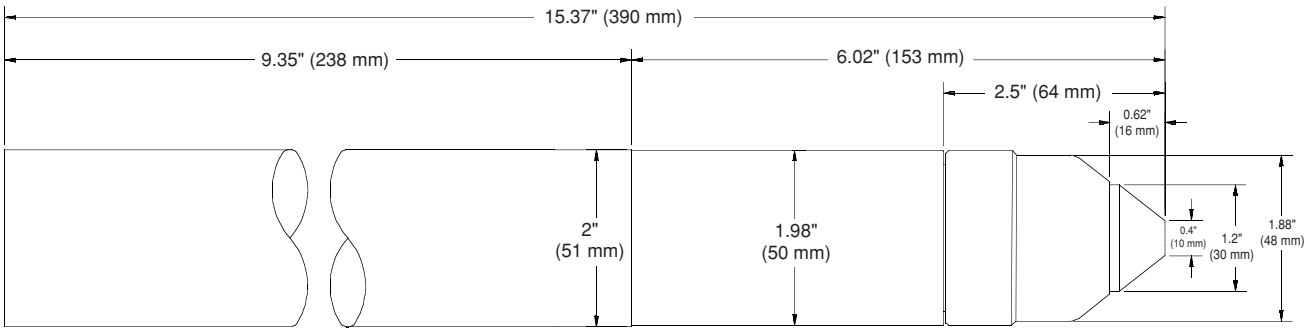

Figure 2-3 PAC620 Bevel Torch Assembly with Dimensions

Remote High Frequency Console (077010)

Dimensions and Weight:

Width (Max.) .....14.63" (372 mm)
Height .....16.75" (425 mm)
Depth .....16.00" (406 mm)
Weight .....75 lbs (34 kg)

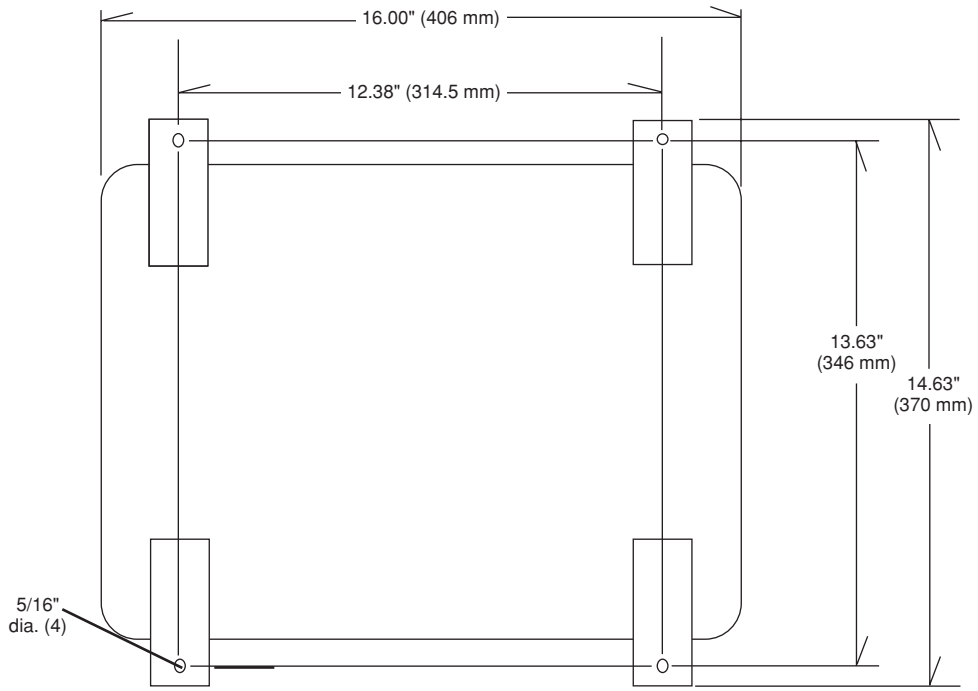

Figure 2-4 Mounting Dimensions (bottom view) – RHF Console

Digital Remote (DR) V/C Control (077012)

Controls ..... Voltage adjust pot:
Adjusts arc cutting voltage and displays value on LEDs.
Current adjust pot:
Adjusts arc cutting current and displays value on LEDs.

Control Range ..... Current: 100 to 760 A
Voltage: 100 to 200 V

Control Resolution ..... Current: 20 A
Voltage: 5 V

Dimensions and Weight:

Width ..... 11.40" (290 mm)
Height ..... 3" (76 mm)
Depth (Max.) ..... 13.38" (340 mm)
Weight ..... 5 lbs – 5 oz. (2.4 kg)

Programmable Remote (PR) V/C Control (077013)

Controls ..... None. Controlled through guidance machinery computer.

Control Range ..... Current: 100 to 760 A
Voltage: 100 to 200 V

Control Resolution ..... Current: 20 A
Voltage: 5 V

Dimensions and Weight:

Width ..... 11.40" (290 mm)
Height ..... 3" (76 mm)
Depth (Max,) ..... 12.50" (318 mm)
Weight ..... 5 lbs – 5 oz. (2.4 kg)

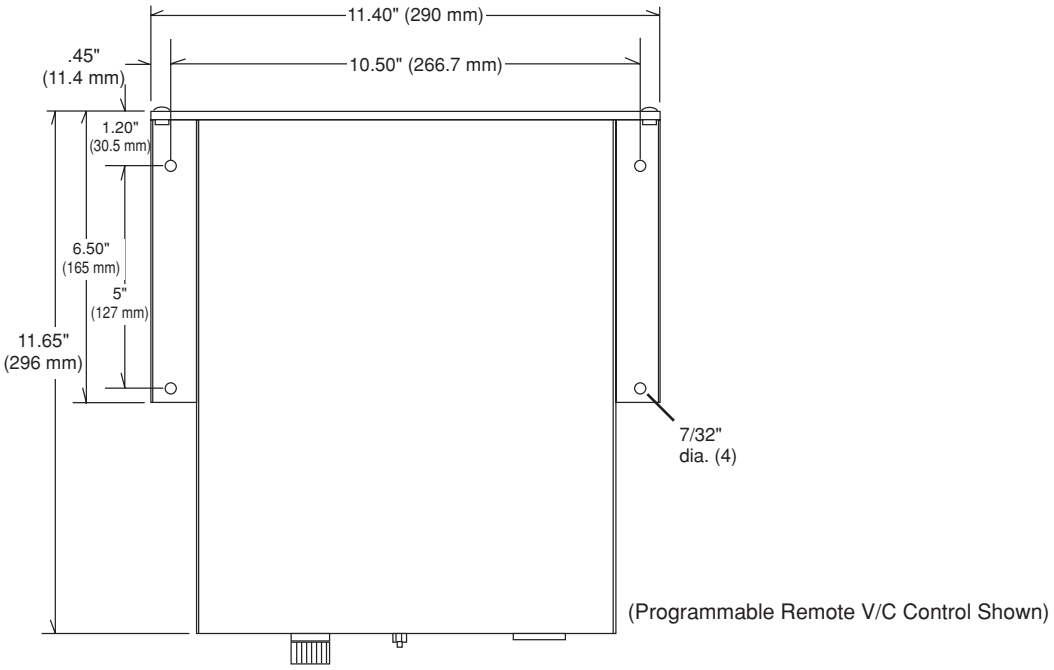

Figure 2-5 Mounting Dimensions (bottom view) – Remote V/C Control

Gas Console (073216)

Dimensions and Weight:
Width .....11.50 " (290 mm)
Height.....14.60 " (370 mm)
Depth.....4 " (100 mm)
Weight .....16 lbs (7.3 kg)

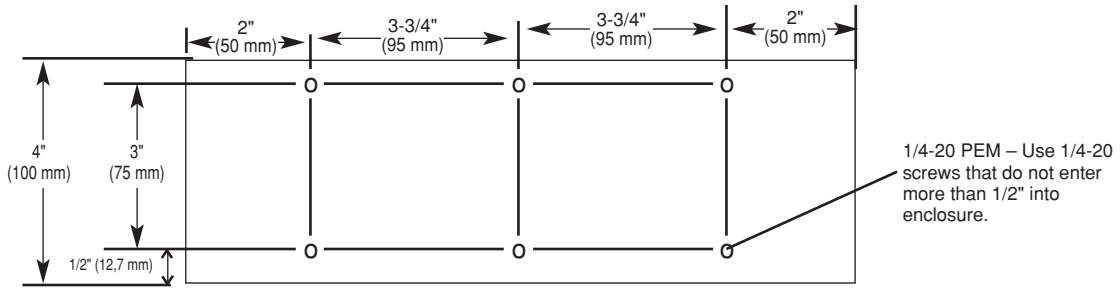

Figure 2-6 Mounting Dimensions (bottom view) – Gas Console

Motor Valve Console (073214)

Dimensions and Weight:
Width .....11.50 " (290 mm)
Height.....4.25" (110 mm)
Depth.....8" (200 mm)
Weight.....14 lbs (6.3 kg)

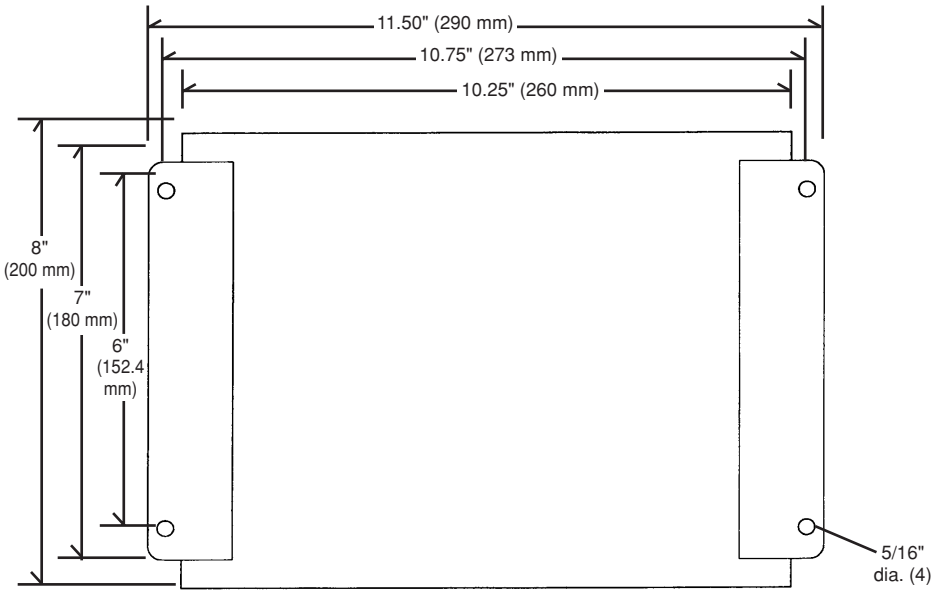

Figure 2-7 Mounting Dimensions (bottom view) – Motor Valve Console

Initial Height Sensing (053016)

Input Power .....120 VAC from power supply
Air Pressure .....20 psi (1.4 bar) regulated shop air input to solenoid.

Dimensions and Weight:
Width (Max.) .....9" (230 mm)
Height .....4.50" (110 mm)
Depth (Max.) .....11.5" (290 mm)
Weight .....13 lbs (6 kg)

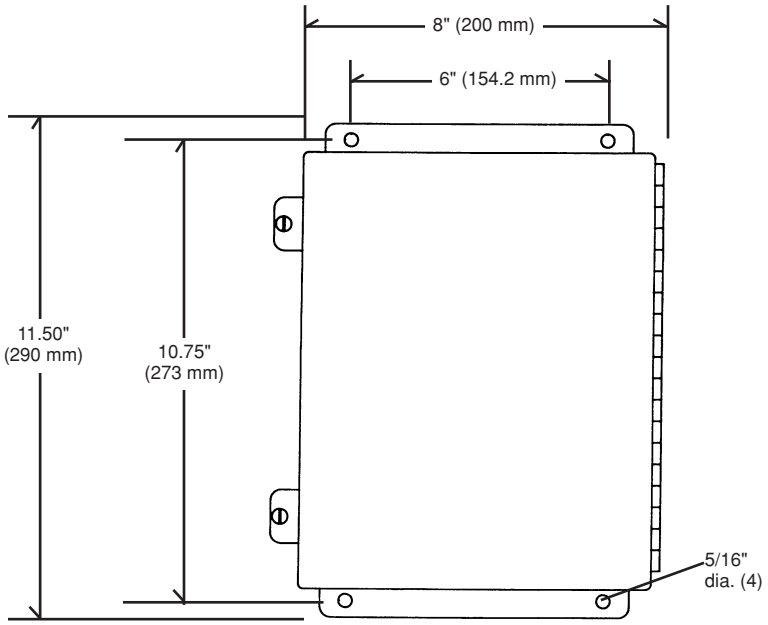

Figure 2-8 Mounting Dimensions – Initial Height Sensing

Timer/Counter (073057)

Dimensions and Weight:
Width .....6.50" (165 mm)
Height .....2.50" (64 mm)
Depth .....8.50" (220 mm)
Weight .....3 lbs (1 kg)

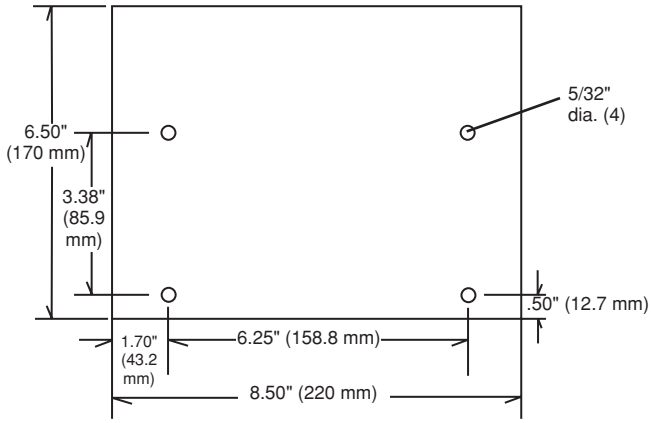

Figure 2-9 Mounting Dimensions (bottom view) – Timer/Counter

Water Chiller

Dimensions and Weight:

Width .....30.25" (770 mm)
Height .....42.25" (1075 mm)
Depth .....46" (1170 mm)
Weight .....700 lbs (320 kg), 600A – 1-Torch
745 lbs (340 kg), 600A – 2-Torch
745 lbs (340 kg), 1000A – 1-Torch

Refer also to Water Chiller Model D Instruction Manual (802410).

H401 Power Supply

H401 Dimensions and Weight:

Width .....40" (1025 mm)
Height .....53" (1345 mm)
Depth .....50" (1270 mm)
Weight .....2250 lbs (1022 kg)

Refer also to H401 & H601 Instruction Manual IM41 (800410).

Water Muffler

Air Control Dimensions and Weight:

Width .....6.25" (160 mm)
Height .....6.25" (160 mm)
Depth .....4.25" (110 mm)
Weight .....6 lbs (2.7 kg)

Pump Dimensions and Weight:

Width .....11" (280 mm)
Height .....19" (480 mm)
Depth .....17" (430 mm)
Weight .....85 lbs (38.6 kg)

Refer also to Water Muffler Instruction Manual (801730).

IEC Symbols Used

	Direct Current (DC)
	Alternating current (AC)
	Plasma cutting torch
	AC input power connection
	The terminal for the external protective (earthed) conductor
1~	A chopper-based power source
	Anode (+) work clamp
	Temperature switch
	Pressure switch
	Plasma torch in the TEST position (cooling and cutting gas exiting nozzle)
I	The power is on
O	The power is off
	Volt/amp curve

Section 3

PRE-INSTALLATION

In this section:

Introduction 3-2
Gas Requirements 3-2
Water Supply Requirements 3-3
Grounding Requirements 3-4
Power Requirements 3-4
    Line Disconnect Switch 3-5
    Power Cables 3-5
    Positioning the Power Supplies 3-6
Transformer Configurations 3-7
Connecting the Power 3-11
Torch Lifter Requirement 3-12
Optional Equipment 3-12
    Water Muffler 3-12
    Initial Height Sensing (IHS) 3-13

Introduction

Prior to the installation of the HT4001 plasma cutting system, please read the following requirements. Their purpose is to both aid you in the installation of your plasma cutting system and to maximize performance of the system.

Installation and service of the electrical and plumbing systems must conform to national or local electrical and plumbing codes. Have this work performed only by qualified, licensed personnel.

If questions arise at any time, call Technical Service listed in the front of this manual or your authorized Hypertherm distributor.

Gas Requirements

The HT4001 system requires a supply gas purity of 99.995% for nitrogen and 99.5% for oxygen. **The customer** must supply the source gas**.** Hypertherm recommends using liquid gas containers.

Note: If the purity level of the gas is too low or if there are leaks in the supply hoses or connections, cut speeds can decrease, cut quality can deteriorate, cutting thickness capability can decrease, and parts life can shorten.

If making hard plumbing connections, avoid using iron pipe. Never use PTFE tape on any joint preparation. After installation, pressurize the entire system and check for leaks.

From Source Supply to Gas Console

The customer must provide a regulator capable of delivering the following:

Oxygen: 120 psi +/- 10 psi (8.3 bar +/- 0.7 bar) to the gas console
Nitrogen: 150 psi +/- 10 psi (10.3 bar +/- 0.7 bar) to the gas console.

Caution: Gas supply pressures not within the above parameters can cause poor cut quality, poor consumable life, and operational problems.

We recommend filtering nitrogen gas with an oil absorbing or coalescing filter and using liquid nitrogen to reduce the risk of gas contamination.

If you are not using hard plumbing from the supply gas to the gas console, we recommend using standard oxygen and nitrogen hose with the system. Hypertherm can provide oxygen or nitrogen hose. See page 4-26 for detail.

WARNING

Cutting with oxygen as the plasma gas can cause a potential fire hazard due to the oxygen-enriched atmosphere that it creates. As a precaution, Hypertherm recommends the installation of an exhaust ventilation system if the customer will be cutting with oxygen.

Water Supply Requirements

The customer must supply a clean water source to the RHF console that will deliver **2.5 gpm** (9.5 lpm) at a minimum pressure of **150 psi** (10.3 bar). To maximize consumable life, water temperature to the RHF console must also be under **70°F** (21°C). An effective way to meet these requirements is to include a water chiller in the HT4001 system.

From Source Supply to Water Chiller

The customer must provide a clean water source capable of delivering the following:

35 psi (2.4 bar) at **0.5 gpm (1.9 l/m)** to the water chiller

(The water chiller then increases the pressure to a maximum of **185 psi** (12.8 bar) and recirculates cooling water to the electrode at a flow of **1.7 gpm** (6.4 l/m).) To ensure water purity, use **type K** hard copper tubing for all plumbing both before and after the water softener (or deionizer), including plumbing from the outlet of the water chiller to the power track or festoon system. We suggest using copper tubing of **1/2 inch** I.D. to the pump inlet.

Hypertherm recommends filtering the inlet line. Purchase filters locally or from Hypertherm.

Refer to water chiller instruction manual (802410 Model D) for additional information on the water chiller. Refer also to *Routine Maintenance* in **Section 6** for instructions on how to protect copper surfaces in the water chiller loop.

Water Quality

A low level of calcium carbonate (measured in water hardness) is critical for proper performance of the nozzle in the torch. Excessive deposits of calcium carbonate on the nozzle will alter water flow and produce an unstable arc.

Hardness of the water at the torch **must be between .206 and 8.5 ppm.**

If using a conductivity meter to measure water purity, the recommended level is:

between .5 and 18 µSiemens/cm at 77° F (25° C).

Source water may require a water softener, reverse osmosis system or other de-ionizing equipment to obtain this low level of hardness. Consult a water specialist for detailed advice in this area.

Water in the Water Table

A corrosion inhibitor can be added to the water in the water table to extend the life of the table and the workpiece. When using the water muffler system with the HT4001, special filtering of the water table water is necessary. See *Optional Equipment – Water Muffler* on page 3-12 for details.

Grounding Requirements

Properly ground the HT4001 system for personal safety and to prevent emission of high-frequency interference. See Appendix F for system grounding requirements.

Connect the worktable to a high-quality earth ground from within 20 feet (6 m) of the table. A suitable ground consists of a solid copper rod of at least 3/4-inch (19 mm) diameter driven to a depth of at least 15 feet (4.5 m) into the earth. This will allow ample grounding only if you reach a permanent moisture level. If soil conditions provide no permanent moisture level, drill a 6-inch (152 mm) hole to a depth of 15 feet (4.5 m) and place a 3/4-inch (19 mm) copper coated steel rod within the 6-inch hole. Pack down the hole with wet rock-salt. For additional information consult the National Electric Code, Article 250, Section H *Grounding Electrode System*, or other appropriate code.

Power Requirements

WARNING

Electrical installation must be performed by qualified personnel only.

All switches, slow-blow fuses and power cables are customer supplied and must be chosen as directed by applicable national and/or local electrical codes.

Use a separate primary line disconnect switch for each HT4001 power supply and slave.

Note: Input voltage must not drop below 15% of the values listed below. The power supply will go into an idle mode and display an error on the control board if the input voltage is too low. See also *Error Codes* in **Section 6**.

Size the disconnect box(es) to the following requirements for the **HT4001** power supply:

Input Voltage	Phase	Rated Input Current @ 89 kVA Output	Recommended Slow-Blow Fuse Size
200 VAC	3	257 amps	350 amps
220 VAC	3	234 amps	300 amps
240 VAC	3	214 amps	300 amps
380 VAC	3	135 amps	175 amps
400 VAC	3	128 amps	175 amps
415 VAC	3	124 amps	175 amps
440 VAC	3	117 amps	175 amps
480 VAC	3	107 amps	150 amps
575 VAC	3	89 amps	125 amps
600 VAC	3	86 amps	125 amps

Line Disconnect Switch

The line disconnect switch serves as the supply voltage disconnecting (isolating) device. Install this switch on a wall near the power supply for easy accessibility by the operator. **The line disconnect switch must be installed by qualified personnel following all applicable local and national codes. The switch should:**

- Isolate the electrical equipment and disconnect all live conductors from the supply voltage when in “OFF” position
- Have one “OFF” and one “ON” position clearly marked with “O” (OFF) and “I” (ON)
- Have an external operating handle capable of being locked in the “OFF” position
- Contain a power operated mechanism that serves as an emergency stop
- Have slow-blow fuses installed for the proper breaking capacity (see table on pg.3-4)

Power Cables

Wire sizes vary based on the distance of the receptacle from the main box.

HT4001 Power Supplies

The wire sizes listed below are taken from the National Electric Code 1990 handbook, table 310.16. Use a 4-conductor (3 conductor w/ground) input power cable with a conductor temperature rating of 60° C (140° F) or 90° C (194° F) according to the following requirements:

Input Voltage	Recommended Cable Size (MCM or AWG) rated for 60° C (140° F)	Recommended Cable Size (AWG) rated for 90° C (194° F)	Current Rating
200 VAC	**See Note*	4/0 AWG	260 amps
220 VAC	**See Note*	4/0 AWG	240 amps
240 VAC	250 MCM	3/0 AWG	215 amps
380 VAC	2/0 AWG	1 AWG	145 amps
400 VAC	2/0 AWG	1 AWG	145 amps
415 VAC	1/0 AWG	2 AWG	125 amps
440 VAC	1/0 AWG	2 AWG	125 amps
480 VAC	1 AWG	3 AWG	110 amps
575 VAC	2 AWG	4 AWG	95 amps
600 VAC	2 AWG	4 AWG	95 amps

Note: Use the smaller diameter 4/0 AWG cable (1.6"/40.6 mm) rated for 90° C (194° F) rather than an equivalent larger diameter cable (350 MCM, 2.05"/52 mm) rated for 60° C (140° F) to accommodate the bend radius necessary to connect incoming power cable to the power supply.

Water Chiller

For information on cable sizes for the water chiller, refer to its instruction manual (802410 Model D).

H401 Slave

For information on cable sizes for the H401 slave, refer to its instruction manual (800410).

Positioning the Power Supplies

WARNING

Remove all electrical connections to power supplies before moving or positioning. Transporting the unit can cause personal injury and equipment damage.

Note: Use a forklift with forks long enough to extend the entire length of the power supply base. If forks are too short they can damage the underside of the power supply.

A lifting eye is also provided for moving the power supplies with a crane or hoist. **Take extra care when moving by hoist or crane! The lifting eye may not be the balanced center of the power supply.**

1. Place the power supplies in an area that is free of excessive moisture, has proper ventilation, and is relatively clean. Allow room for accessing the sides of the power supplies for servicing.

2. Place the power supplies so that air flow is not blocked in any way. (Cooling air is drawn in through the front panel grating, and is exhausted through the rear of the unit by cooling fans.)

3. Do not place any filter device over the air intake locations. This reduces cooling efficiency and VOIDS THE WARRANTY.

Transformer Configurations

Three-phase input

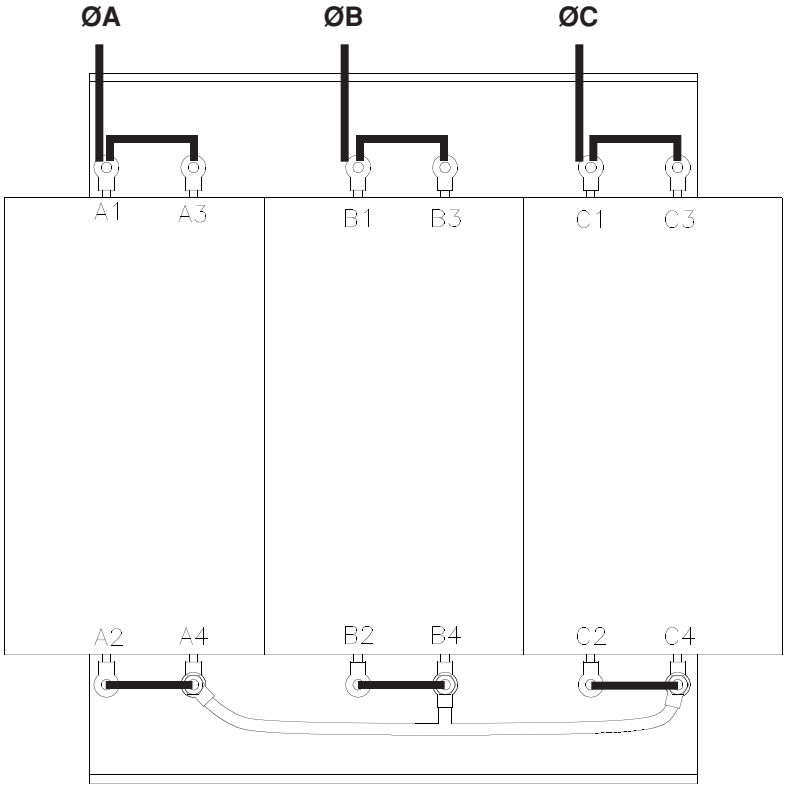

Figure 3-1 240V Transformer

Three-phase input

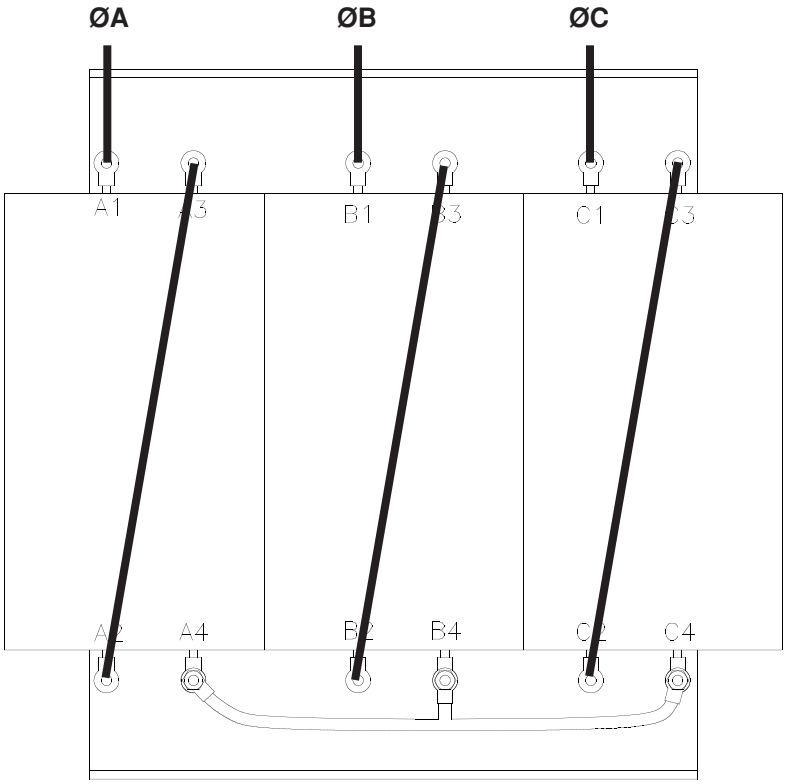

Figure 3-2 480V Transformer

Transformer Configurations (cont.)

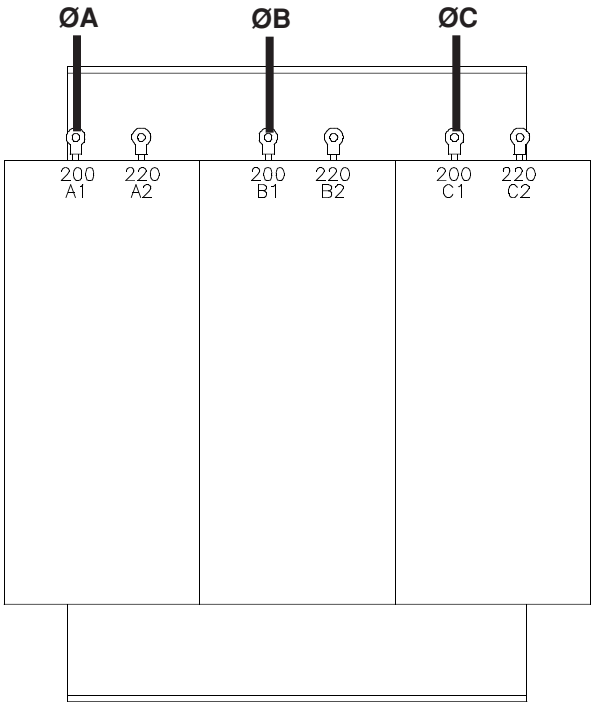

Figure 3-3 200V Transformer

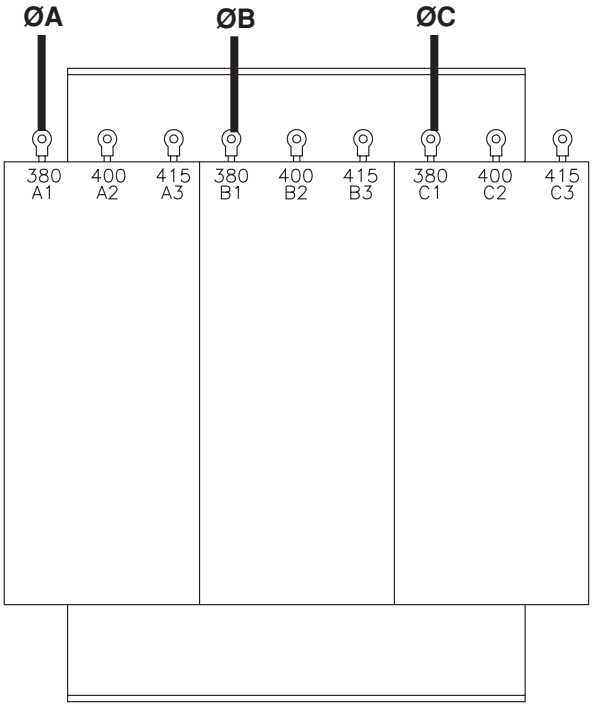

Figure 3-4 380V Transformer

Transformer Configurations (cont.)

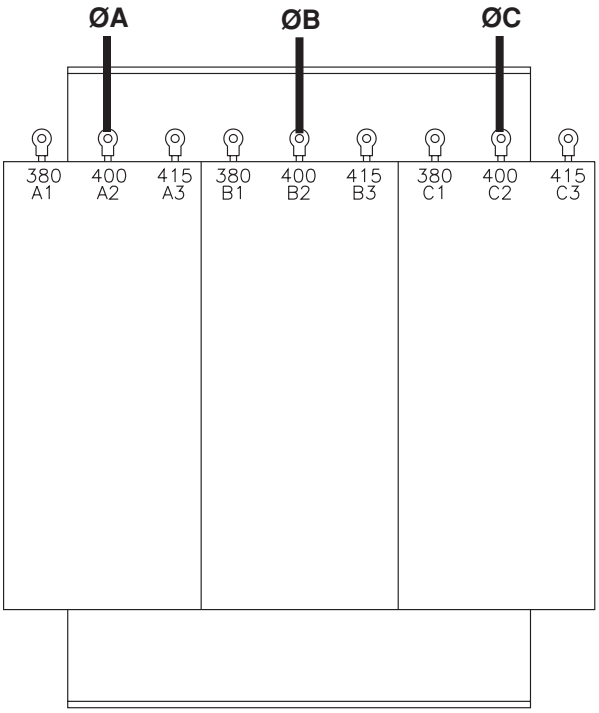

Figure 3-5 400V Transformer

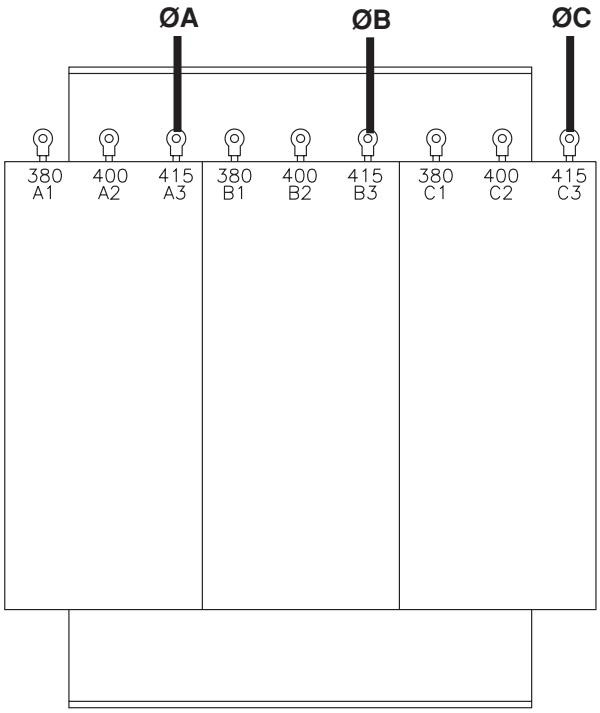

Figure 3-6 415V Transformer

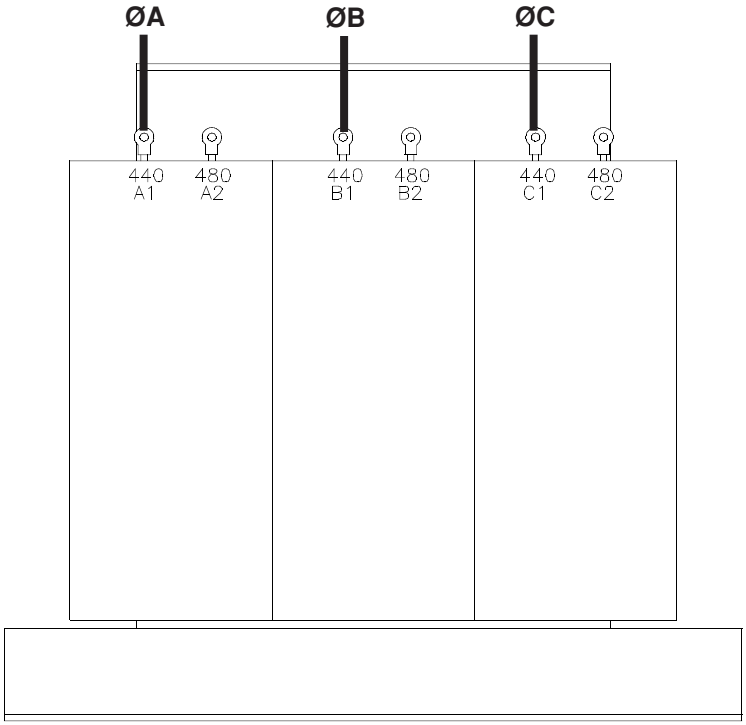

Figure 3-6a 440V Transformer

Transformer Configurations (cont.)

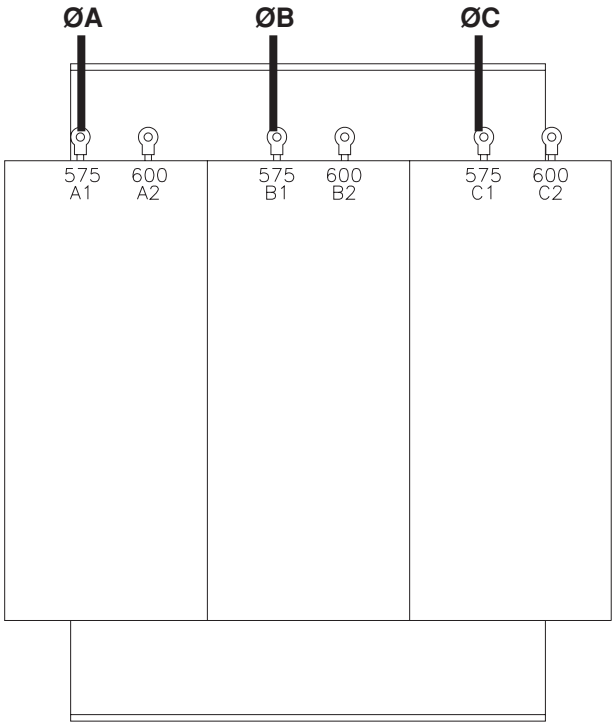

Figure 3-7 575V Transformer

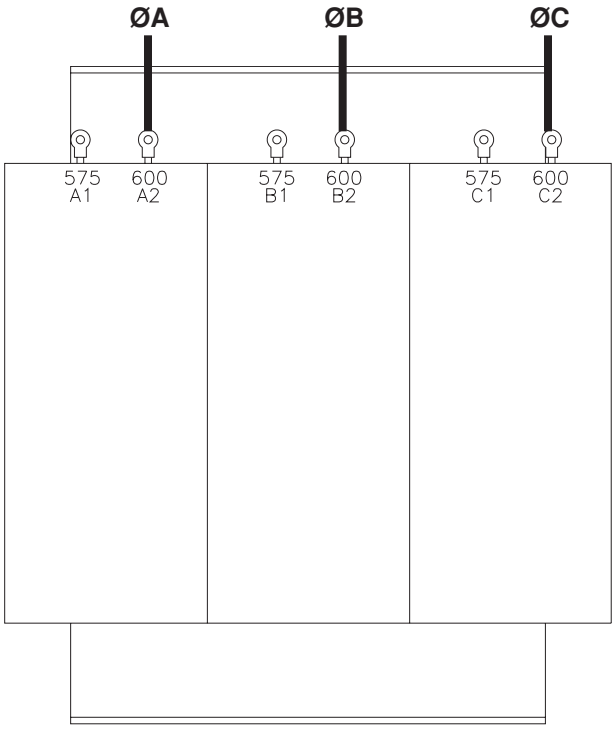

Figure 3-8 600V Transformer

Connecting the Power

WARNING

The line disconnect switch must be in the OFF position before making the power cable connections! In the U.S., use a "lock-out/tag-out" procedure until installation is complete. In other countries, follow appropriate local or national safety procedures.

Power Cable to HT4001 Power Supply

To connect the power cable to the 400V CE power supplies (077022 and 077023), refer to Appendix C. To connect the power cable to the 200/220V power supplies (077002 and 077016), refer to Appendix D. For all other power supplies, use the procedure below.

1. Insert the **Power Cable** through the **Strain Relief** located in the rear of the power supply.
2. Connect the power leads to the **L1**, **L2**, and **L3** terminals of **CON1.** See Fig. 3-9.
3. Connect the **Ground (PE)** lead to the stud as shown in Fig. 3-9.

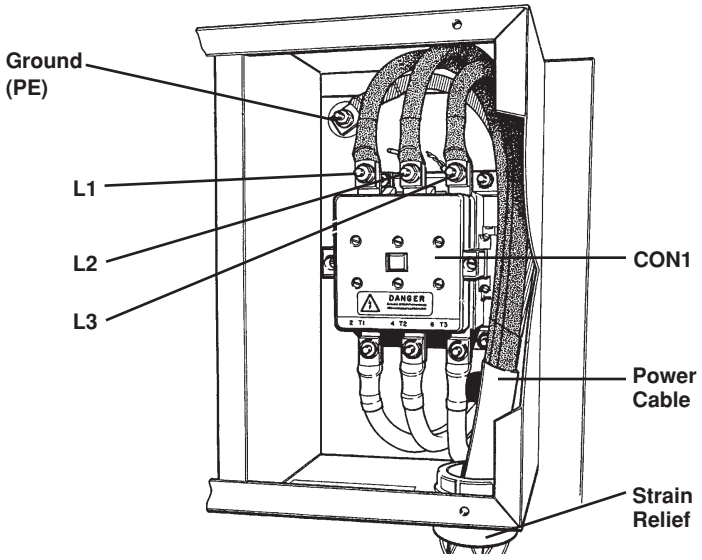

Figure 3-9 Power Cable Connections

WARNING

There is line voltage at the contactors after the line disconnect switch is ON, even if the circuit breaker on the HT4001 power supply is OFF. As a common safety practice, ALWAYS verify that the line disconnect switch is in the OFF position before installing, disconnecting or servicing in these areas.

Power Cable from HT4001 Power Supplies to Power Source

1. **The line disconnect switch must be in the OFF position!**

2. Connect the power cable leads to the line disconnect switch following local and applicable electrical codes.

	WARNING
The line disconnect switch must remain in the OFF position during the rest of the pre-installation and installation of the HT4001 system!	

Torch Lifter Requirement

The HT4001 system requires a high-quality, motorized torch lifter with sufficient travel to cover all cutting thickness requirements. The lifter must provide at least **10 inches (254 mm) of vertical travel**. The unit must have a constant speed of at least **20 ipm (508 mm/min)** with positive braking. A unit which drifts through the stop point is not acceptable.

Optional Equipment

Water Muffler

The water table provides the supply of water for the water-muffler pump. **This water must be filtered for the water-muffler system**. Hypertherm provides a filter (027009) with all water-muffler systems.

Important: Place the pump as close as possible to the water table. Longer distances result in pump priming and water lag problems during start up. This results in excessive noise and smoke during the initial starting.

Plumbing Requirements

Attach the filter to the pump with approximately **four feet** of **3/4 inch I.D. #12** hose. The customer may supply his/her own water pump and water hose or purchase a pump with or without hose through Hypertherm. Please refer to water muffler system part numbers listed on the following page, and water muffler instruction manual 801730 for further information.

Power Requirements

The customer must provide the power cable for the water-muffler pump. The pumps provided by Hypertherm take a three-phase input. Part numbers and corresponding voltages are listed below. Input current information is provided on the motor data plate. Present pump systems all draw less than 20 amps. Select cable sizes accordingly.

Water Muffler System Part Number	Water Pump Part Number	Input Voltages
034126 (w/hoses)	028042	230-460 Volt/3Ø/60 Hz
034128 (w/hoses)	028299	380-415 Volt/3Ø/50 Hz
034130 (w/hoses)	028308	575 Volt/3Ø/60 Hz
034127 (wo/hoses)	028042	230-460 Volt/3Ø/60 Hz
034129 (wo/hoses)	028299	380-415 Volt/3Ø/50 Hz
034131 (wo/hoses)	028308	575 Volt/3Ø/60 Hz

Air Requirements

Provide a clean, dry, oil-free source of air with a delivery pressure between **80** and **120 psi (5.5** and **8.3 bar)** with a minimum flow rate of **20 scfm.**

For further information, please refer to Hypertherm water muffler instruction manual (801730).

Initial Height Sensing (IHS)

The customer must provide a source of compressed air to the Initial Height Sensing system.

Air Requirements

Use a clean, dry, oil-free source of air to prevent possible problems created by moisture and water in the line. Reduce shop air pressure to **20 psi (1.4 bar)** with a regulator. Use a **1/4 inch** I.D. hose between the regulator and the inductive height control module.

An option to the IHS system is an upper-limit switch and cable. Please refer to *Initial Height Sensing Connections* in the **Installation** section of this manual for further information.

Hypertherm

Section 4

INSTALLATION

In this section:

Upon Receipt 4-2
Claims 4-2
Module Grounding and Grounding Checks 4-3
Noise Levels (Decibels) 4-3
System Units Placement 4-4
HT4001 Interconnection Reference Map 4-5
Power Supply Connections 4-6
RHF Console Connections 4-22
Gas Console Connections 4-26
Motor Valve Console Connections 4-30
Initial Height Sensing Connections 4-32
Optional Power Supply Connections 4-36
Mounting the Machine Torch 4-38
    Torch Alignment 4-38

Upon Receipt

The HT4001 system is shipped mounted on skid(s) and protected by heavy carton covers. Before unpacking, inspect the cartons for evidence of damage during shipment. If there is evidence of damage, refer to *Claims for damage during shipment* below for details.

1. Remove all packing material and discard. Remove the units and items from the shipping skid.

2. Verify that the components of the HT4001 system, optional units, cables and hoses, and items listed below are included.

Alert your distributor or Hypertherm if any of the items are damaged or missing. All communications regarding this equipment must include the model number and serial number (located on the back of the HT4001 power supply). Refer to *Claims for defective or missing merchandise* below for details.

HT4001 System Components

- HT4001 Power Supply
- Remote High Frequency Console
- Remote Voltage/Current Control
- Gas Console
- Motor Valve Console
- Cable
- Hoses
- Torch lead set to Motor Valve Console
- Shielded torch lead set to RHF Console
- Machine Torch
- Consumable spare parts kit

Optional Units

- Initial Height Sensing
- Water Muffler System
- Timer/Counter
- H-401 Slave
- Water Chiller

Claims

Claims for damage during shipment — If your unit was damaged during shipment, you must file a claim with the carrier. Hypertherm will furnish you with a copy of the bill of lading upon request. If you need additional assistance, call our Customer Service group at 1-800-737-2978.

Claims for defective or missing merchandise — All units shipped from Hypertherm undergo rigorous quality control inspections for defects. If any of the merchandise is defective or missing, call your distributor for help. If you need additional assistance, call our Customer Service group at 1-800-737-2978.

Module Grounding and Grounding Checks

Please refer to *Grounding Requirements* in the **Pre-Installation** section of this manual for earth ground specifications.

See Appendix F for system grounding requirements.

Before operating the HT4001, perform the following grounding checks to ensure proper operation, personal safety, and to reduce emission of radio-frequency interference:

- Ensure the power cord ground wire is properly connected to the ground in the line disconnect box.
- Ensure the power cord ground wire is properly connected to the HT4001 power supply chassis. Refer to *Connecting the Power* in the **Pre-Installation** section of this manual.
- Ensure that all electrical connections are tight to avoid excessive heating.

Noise Levels (Decibels)

Figure 4-1 presents the noise levels in decibels experienced by an operator standing 10 feet (3 m) from the torch in a confined area under varied conditions while cutting mild steel.

- Without Water Muffler – 102 dbs
- With Water Muffler using oxygen at 260 Amps – 85 dbs
- With Water Muffler using nitrogen at 400 Amps – 89 dbs
- Water 3" over plate with Water Muffler using oxygen or nitrogen – less than 85 dbs

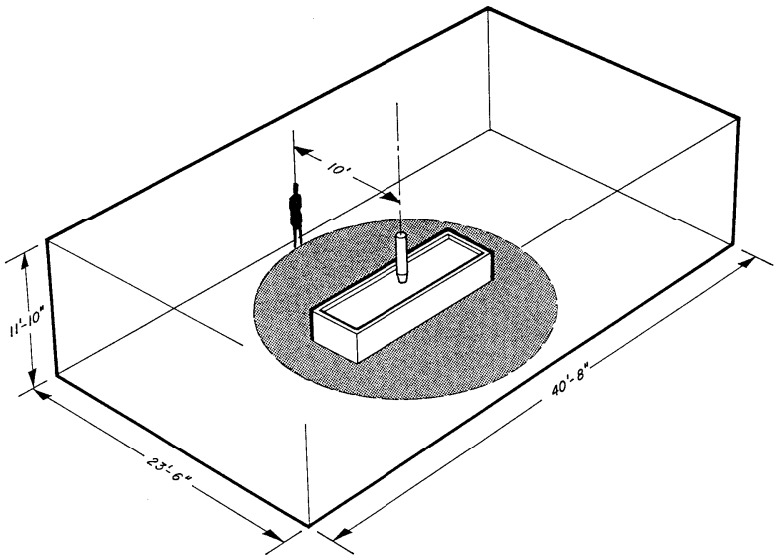

Figure 4-1 Noise Levels (Decibels)

System Units Placement

- Position all required units prior to making electrical, gas, and interface connections.
- See **Section 2** for mounting dimensions of all units.
- Ground all external modules in the HT4001 system to earth**.**
- To prevent leaks in the system, tighten all gas and water connections to the following specifications:

Gas or water hose size	Torch Specification lbf-in	lbf-ft	kgf-cm
Up to 3/8" (9.5 mm)	75-85	6.25-7	86-98
1/2" (12.7 mm)	360-480	30-40	415-550

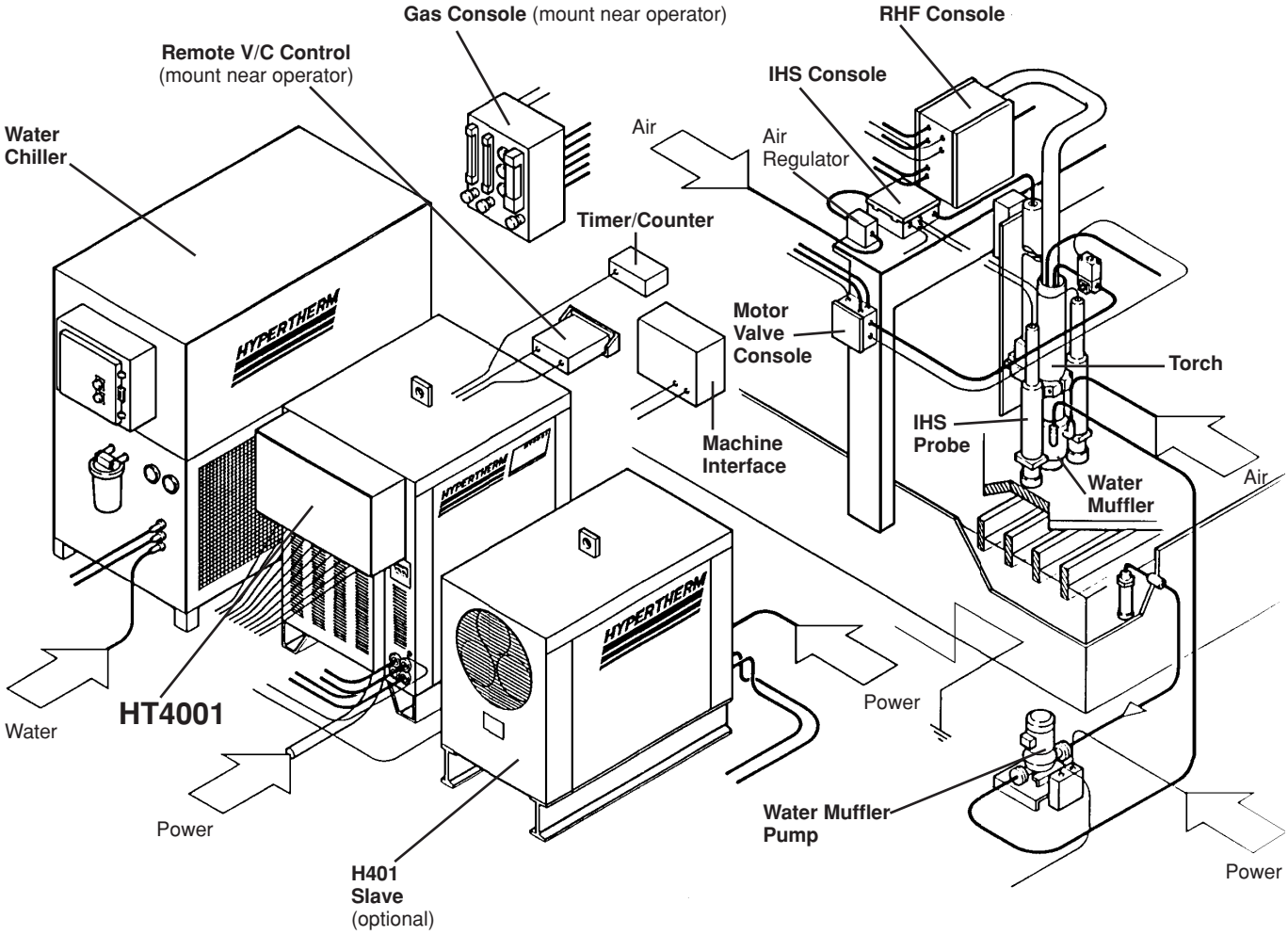

Figure 4-2 Typical HT4001 System* Component Placement for Gantry Cutter

* System shown includes H401 slave, IHS, and water muffler options

HT4001 Interconnection Reference Map

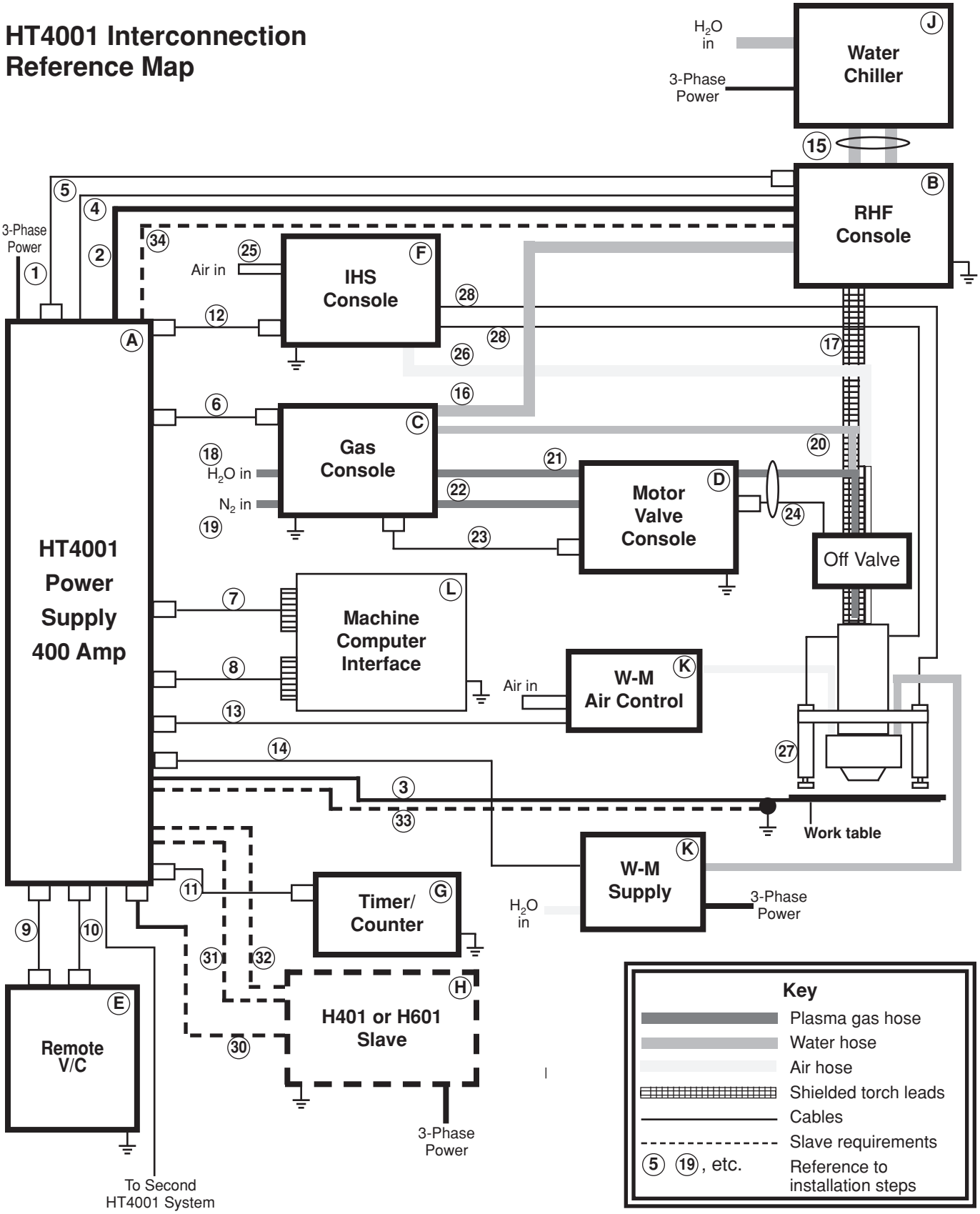

Figure 4-3 HT4001 Interconnect System Diagram with IHS, Water Muffler and Slave

Power Supply Connections

The circled numbers on the right-hand pages represent connection points for the corresponding numbered cables and hoses on the left-hand pages. Any special instructions for installation are also explained on the left-hand pages. **The cable and hose part numbers in this section represent the most commonly used lengths. For additional lengths, see Section 7 or call Hypertherm**.

WARNING

All power must be turned OFF before performing installation!!

(1) ***Power Cables – Power Supply (PS) to Power Source***
See *Connecting the Power* in the **Pre-Installation** section of this manual.

(2) ***Negative Lead – PS to Remote High Frequency (RHF) Console***
Pass the negative 2 lead through one of the 2" bushings in the lower rear of the HT4001 power supply and connect to the lower bar (-) on the center bail rear as shown in Fig. 4-4. Connect the other end of the negative lead securely to the cathode block in the RHF console. See part number information below under *Positive Lead – PS to Work Table*

(3) ***Positive Lead – PS to Work Table***
Pass the positive 3 lead through one of the 2" bushings in the lower rear of the HT4001 power supply and connect to the upper bar (+) on the center bail rear as shown in Fig. 4-4. Connect the other end of the lead securely to the grounded work table.

Note: Two positive and two negative leads needed when cutting with from 400-750 amps. See Appendix A to connect H401 Slave to HT4001 power supply.

Part No.	Length	Part No.	Length
023136	20 ft (6 m)	023124	75 ft (23 m)
023078	25 ft (7.5 m)	023080	100 ft (30.5 m)
023101	30 ft (9 m)	023081	150 ft (46 m)
023135	40 ft (12 m)	023316	180 ft (55 m)
023079	50 ft (15 m)	023188	200 ft (61 m)

(4) ***Nozzle Lead – PS to RHF Console***
Pass the fork terminal end of the nozzle lead through the small bushing in the lower rear of the HT4001 power supply and connect to the start circuit assembly as shown in Figure 4-4. Connect the ring terminal end of the nozzle lead to the inductor coil in the RHF console. See pages 4-8 and 4-22 through 4-25 for remaining RHF console connections.

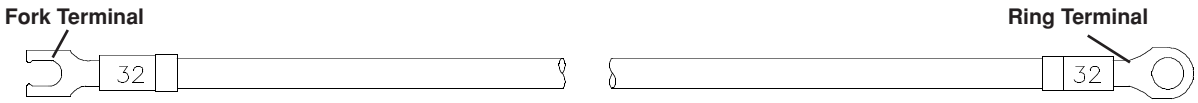

Part No.	Length	Part No.	Length
123009	25 ft (7.5 m)	123012	100 ft (30.5 m)
123010	50 ft (15 m)	123013	150 ft (46 m)
123011	75 ft (23 m)	123014	200 ft (61 m)

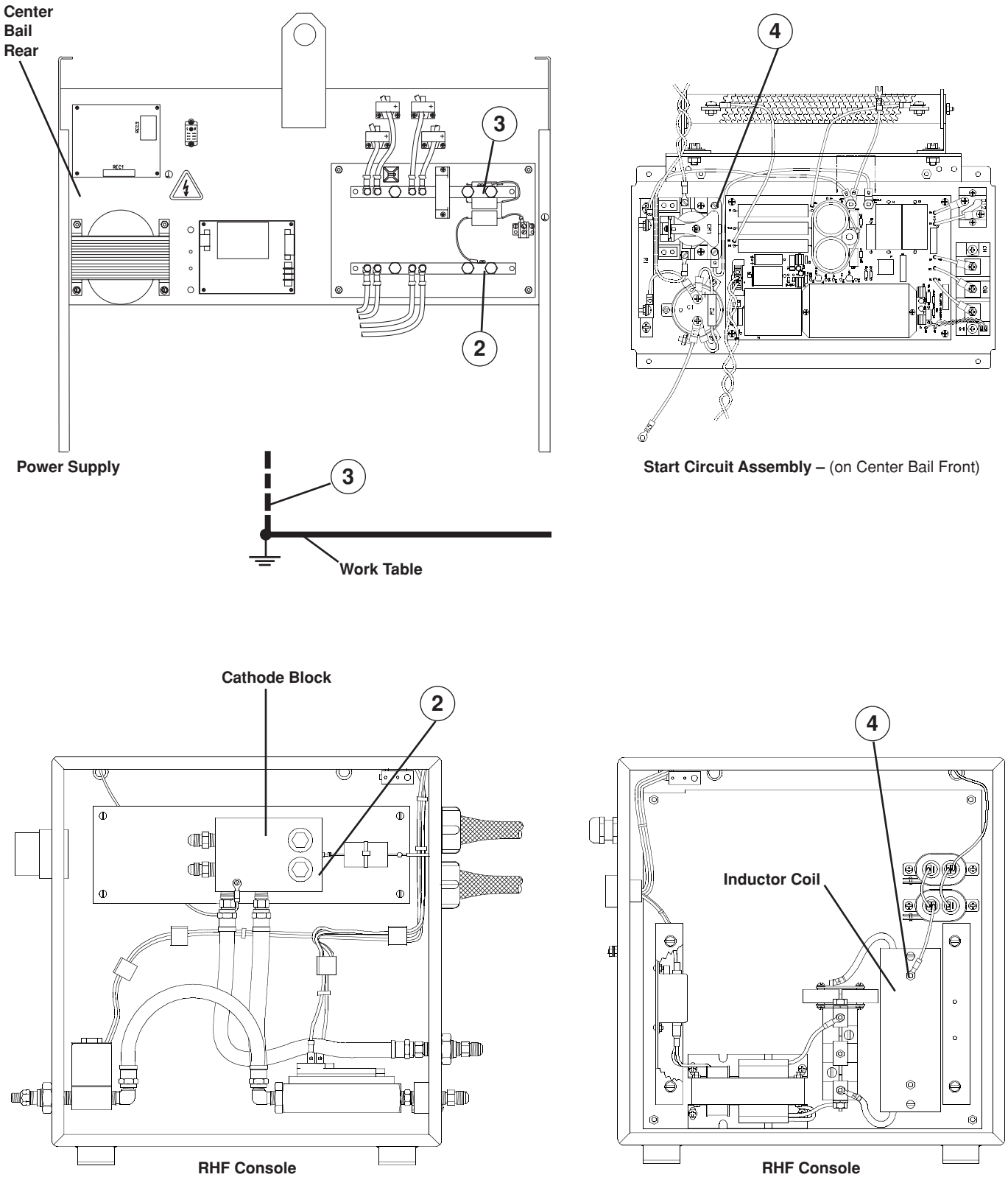

Figure 4-4 Negative Lead and Nozzle Lead Connections – PS to RHF Console
Positive Lead Connection – PS to Work Table

Power Supply Connections (cont.)

5 ***PS/RHF Cable – PS to RHF Console***

See pages 4-6 and 4-22 through 4-25 for remaining RHF console connections.

PS End **RHF End**

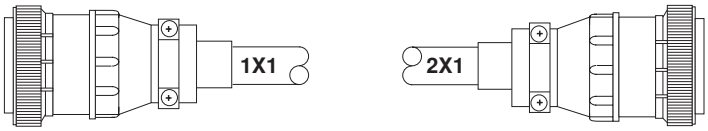

Part No.	Length	Part No.	Length
023764	50 ft (15 m)	023767	150 ft (46 m)
023765	75 ft (23 m)	023768	200 ft (61 m)
023766	100 ft (30.5 m)	023769	300 ft (91.5 m)

RUN LIST – PS/RHF CABLE			
SIGNAL	PLUG 1X1	COLOR	PLUG 2X1
HF XFMR	1	BLACK	12
HF XFMR	2	RED	15
Gnd	3	SHIELD	CUT
SV6/Inj. H2O	4	BLACK	2
SV6/Inj. H2O	8	WHITE	5
Gnd	9	SHIELD	CUT
FS2/Flow SW	10	BLACK	10
FS2/Flow SW	11	GREEN	13
Gnd	12	SHIELD	CUT
FS1/Flow SW	23	BLACK	7
PS1/Pressure SW	24	BLUE	8
Gnd	25	SHIELD	CUT
S1,S2/Door Intlk	34	BLACK	1
S1,S2/Door Intlk	35	YELLOW	4
Gnd	36	SHIELD	CUT
CR1	28	BROWN	9
Pilot Arc Relay	21	BLACK	11
Gnd	26	SHIELD	CUT
CR2	5	ORANGE	3
	6	BLACK	6
Gnd	7	SHIELD	CUT

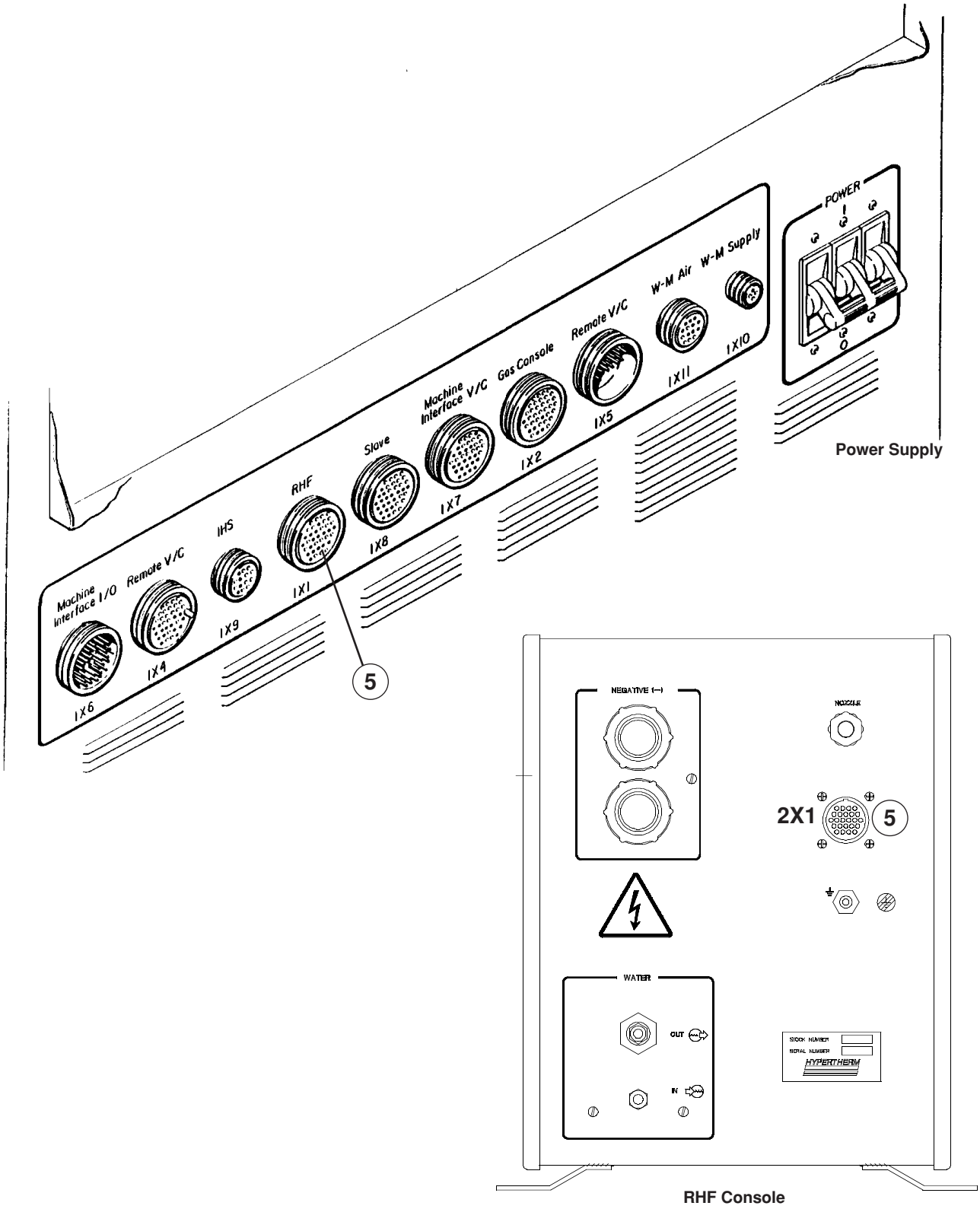

Figure 4-5 RHF Cable Connections – PS to RHF Console

Power Supply Connections (cont.)

6 *Gas Console Cable – PS to Gas Console*

See pages 4-26 through 4-29 for remaining gas console connections.

PS End **GC End**

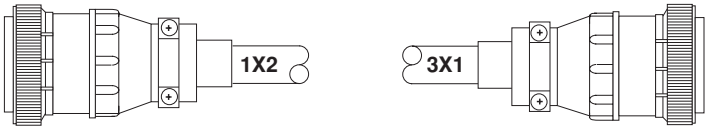

Part No.	Length	Part No.	Length
023496	50 ft (15 m)	023500	200 ft (61 m)
023497	75 ft (23 m)	023812	250 ft (76 m)
023498	100 ft (30.5 m)	023819	300 ft (92 m)
023499	150 ft (46 m)	023576	350 ft (107 m)

RUN LIST PS/GAS CONSOLE CABLE			
SIGNAL	PLUG 1X2	COLOR	PLUG 3X1
SV5/Plasma OFF	29	BLACK	29
SV5/Plasma OFF	30	RED	30
Gnd	34	SHIELD	34
S1/O_2,N_2 Select	5	BLACK	5
S1/O_2,N_2 Select	6	WHITE	6
Gnd	1	SHIELD	1
S2/Test Preflow	2	BLACK	2
S2/Test Preflow	3	GREEN	3
Gnd	7	SHIELD	7
S2/Test Cut Flow	8	BLACK	8
S2/Test Cut Flow	9	BLUE	9
Gnd	4	SHIELD	4
SV4A/Preflow-Cut	16	BLACK	16
SV4A/Preflow-Cut	17	YELLOW	17
Gnd	10	SHIELD	10
SV4B/Preflow-Cut	23	RED	23
SV4B/Preflow-Cut	24	YELLOW	24
Gnd	25	SHIELD	25
SV2, SV3/O2 N2 Preflow	11	BLACK	11
SV2, SV3/O2 N2 Preflow	12	BROWN	12
Gnd	18	SHIELD	18
SV1A/Plasma O2-N2	35	RED	35
SV1A/Plasma O2-N2	36	GREEN	36
Gnd	31	SHIELD	31
SV1B/Plasma O2-N2	19	BLACK	19
SV1B/Plasma O2-N2	20	ORANGE	20
Gnd	13	SHIELD	13
PS1, PS2/Plasma Pressure	14	RED	14
PS1, PS2/Plasma Pressure	15	WHITE	15
Gnd	21	SHIELD	21
S3, Increase/Decrease	26	RED	26
S3. Increase/Decrease	27	BROWN	27
Gnd	28	SHIELD	28
Spare	32	RED	32
Spare	33	BLUE	33
Gnd	37	SHIELD	37

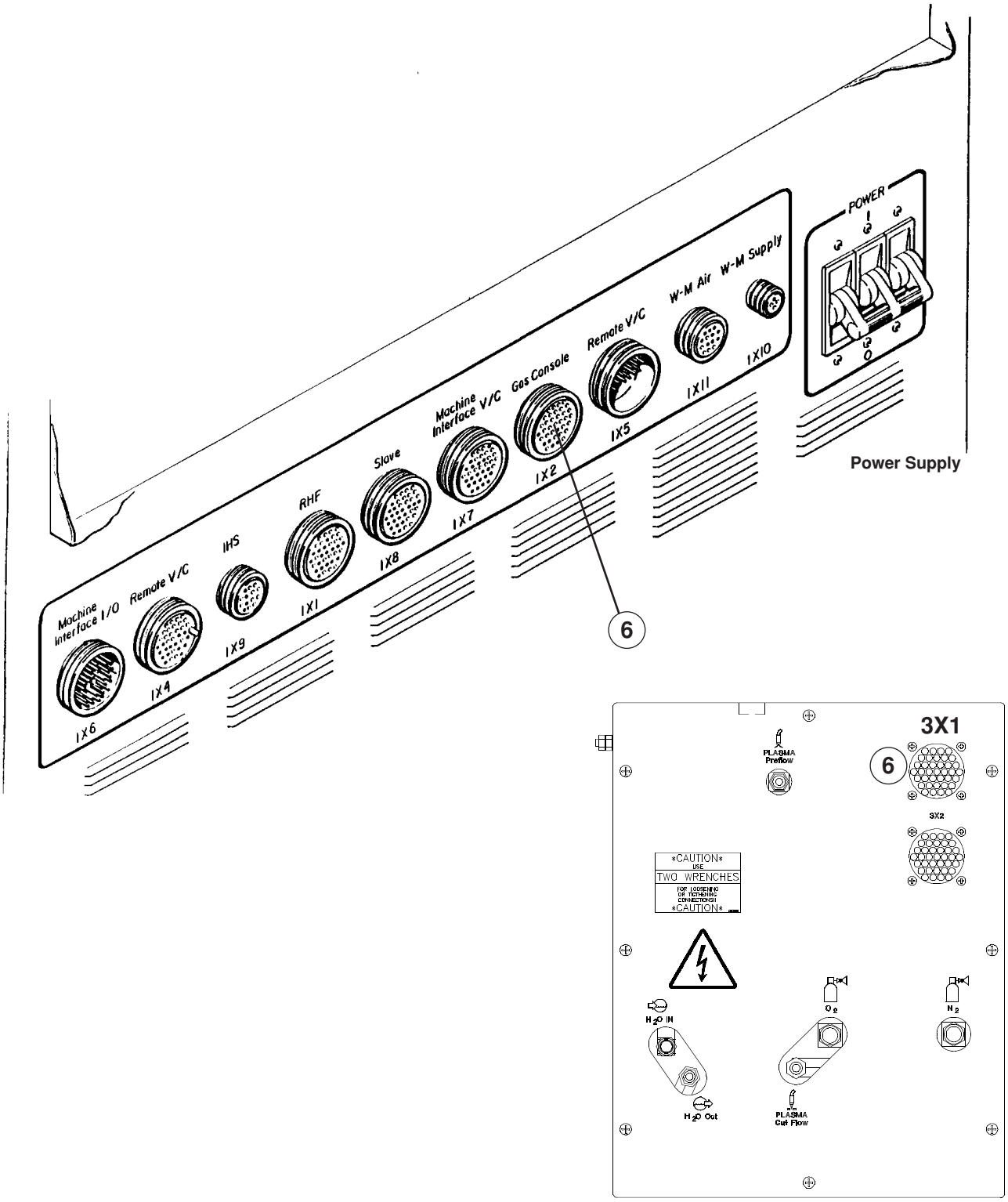

Figure 4-6 Gas Console Cable Connection – PS to Gas Console

Power Supply Connections (cont.)

7 *Machine Interface I/O Cable – PS to Machine Interface*

PS End

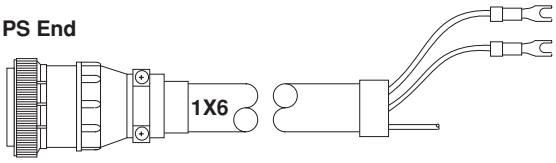

Part No.	Length	Part No.	Length
023892	25 ft (7.5 m)	023895	100 ft (30.5 m)
023893	50 ft (15 m)	023896	150 ft (46 m)
023894	75 ft (23 m)	023897	200 ft (61 m)

PS END SCKT	COLOR	MACH. END LUG	DESCRIPTION AND COMMENTS
1	Wht	87	Hold (12VDC) Signal. Synchronizes starting of 2 or more systems. Closed=ON; Open=OFF
5	Blk	86	Hold - Common
10	Shield	Cut	Hold - Shield
2	Yel	173	Initial Height (12VDC) Signal. Closed=OFF ; Open=ON
6	Blk	174	Initial Height - Common
11	Shield	Cut	Initial Height - Shield.
3	Brn	171	Auto Height (12VDC) Signal. Closed=OFF; Open=ON or Corner (12VDC)
7	Blk	172	Auto Height - Common
12	Shield	Cut	Auto Height - Shield
4	Orange	135	Remote On/Off - See note on next page
8	Black	136	Remote On/Off - See note on next page
13	Shield	Cut	Remote On/Off - Shield
9	Blu	82	Plasma Start (24VAC) - Signal. Close=Start
15	Blk	83	Plasma Start - Signal.
14	Shield	Cut	Plasma Start - Shield.
22	Red	77	Upper Limit Switch, Hot. Normally closed. Open when fully retracted.
21	Wht	76	Upper Limit Switch, Neutral.
20	Shield	Cut	Upper Limit Switch, Shield.
28	Yel	80	Plasma Emergency Stop (24VAC) Signal. Closed =stop.
33	Red	81	Plasma Emergency Stop - Signal
27	Shield	Cut	Plasma Emergency Stop - Shld
34	Red	169	∞†Down Relay, Load (Solid state, rated to switch 24 to 120VAC, 1amp. DC relay optional) Closed=Down
29	Blk	170	Down Relay, Line
23	Shield	Cut	Down Relay, Shield
35	Grn	167	∞†Up Relay, Load (Solid state, rated to switch 24 to 120VAC, 1amp. DC relay optional) Closed=Up
30	Blk	168	Up Relay, Line
24	Shield	Cut	Up Relay, Shield
36	Red	84	†*Arc Xfer Output - Signal Contact closes after arc transfer and time delay. Dry contact relay.
31	Blu	85	*Arc Xfer Output - Signal
25	Shield	Cut	*Arc Xfer Output - Shield
37	Red	79	**Arc Voltage Isolated + Divided (1/100) Signal
32	Grn	78	**Arc Voltage Isolated + Divided (1/100) Sig
26	Shield		**Arc Voltage Isolated + Divided (1/100),Shld

Notes: * Note on the µP PCB that resistor R150 and capacitor C78 are connected in series across the contacts. In some cases one lead of R150 must be cut from the control PC board as the R-C circuit may provide enough current flow to maintain machine motion input to cutting machine.

** Note on the µP PCB that resistor R155 and capacitor C79 are connected in series across the contacts. In some cases one lead of R155 must be cut from the control PC board as the R-C circuit may provide enough current flow to maintain machine motion input to cutting machine.

∞ Signals are AC relays. DC relays are available as an option from Hypertherm by ordering kit: 128404

†WARNING

When installing or servicing the HT4001, AC or DC line voltages may be present on the UP, DOWN and TRANSFER signals even if the power supply line disconnect switch is OFF. Make certain that all line disconnect switches relating to the HT4001 system are OFF during installation and when servicing.

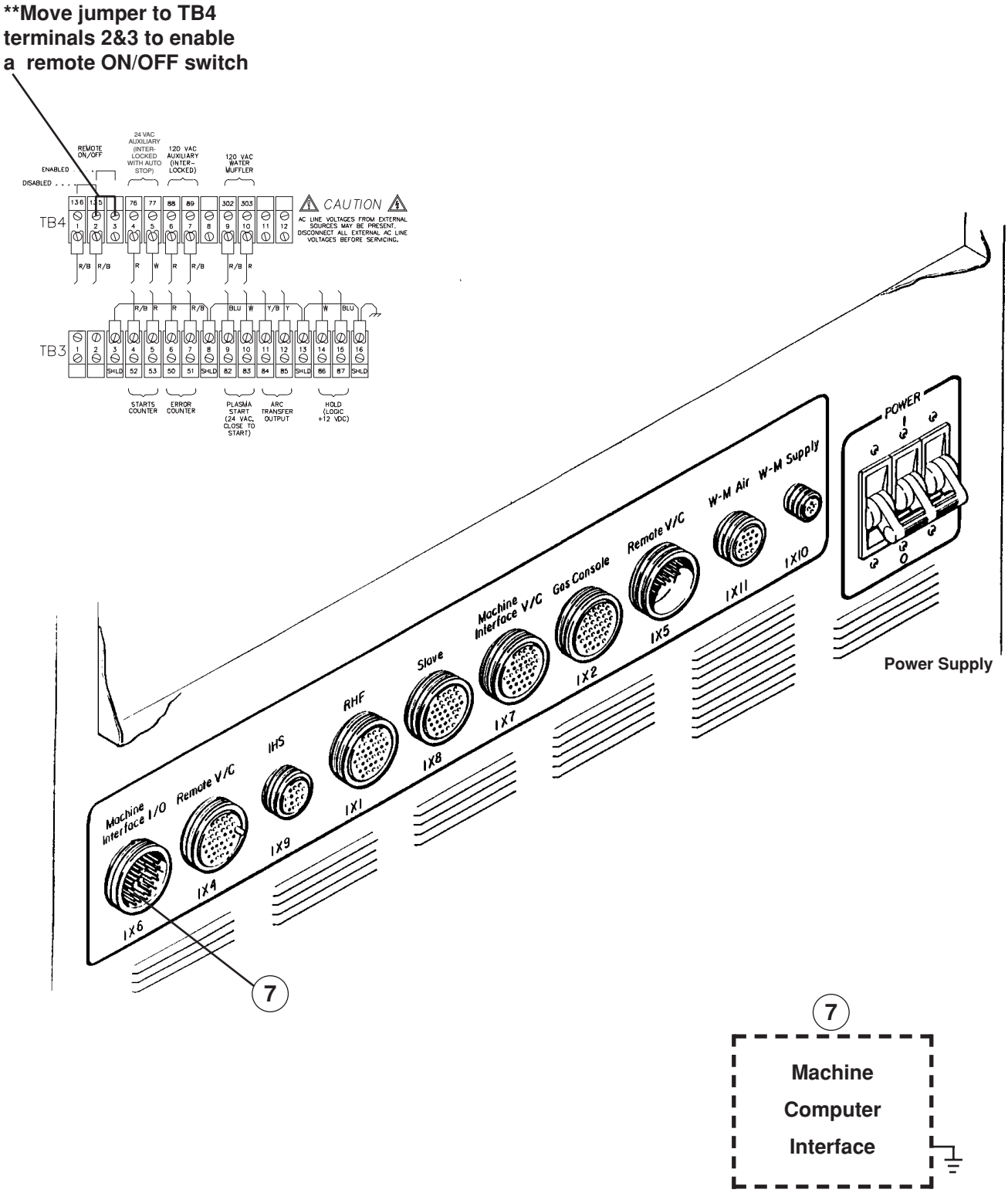

Figure 4-7 Machine Interface I/O Cable Connection – PS to Computer Interface

Power Supply Connections (cont.)

8 *Machine Interface V/C Cable – PS to Machine Interface*

Note: If HT4001 system uses the digital remote V/C unit to set voltage and current, skip this step. The machine interface V/C cable is used only with the programmable remote.

Before connecting the machine V/C interface cable, see the wiring diagrams in this manual and verify that the correct plug is attached to the µP control PCB REC6 receptacle.

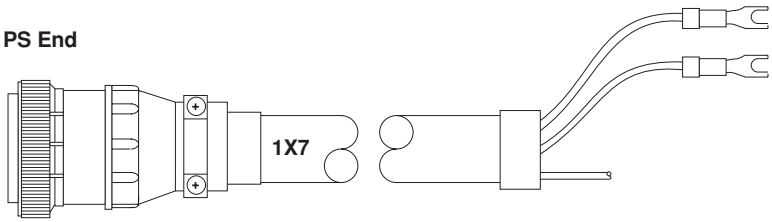

Part No.	Length	Part No.	Length
023851	15 ft (4.5 m)	023855	75 ft (23 m)
023852	25 ft (7.5 m)	023856	100 ft (30.5 m)
023853	35 ft (10.6 m)	023903	125 ft (38 m)
023854	50 ft (15 m)	023857	150 ft (46 m)
		023858	200 ft (61 m)

PS END SCKT	COLOR	DESCRIPTION
1	Black	Current 5
2	Wht	Current 10
3	Red	Current 20
4	Green	Current 40
5	Orange	Current 80
6	Blue	Current 100
7	White/Black	Current 200
8	Red/Black	Current 400
9	Green/Black	Current 800
10	Shield	Shield
11	Blue/Black	Current ICom
12	Black/White	spare
13	Red/White	spare
14	Green/White	Voltage V1.25
15	Blue/White	Voltage V2.5
16	Black/Red	Voltage V5
17	White/Red	Voltage V10
18	Orange/Red	Voltage V20
19	Blue/Red	Voltage V40
20	Red/Green	Voltage V80
21	Orange/Green	Voltage V100
22	Black/White/Red	Voltage V200
23	White/Black/Red	Voltage VCom

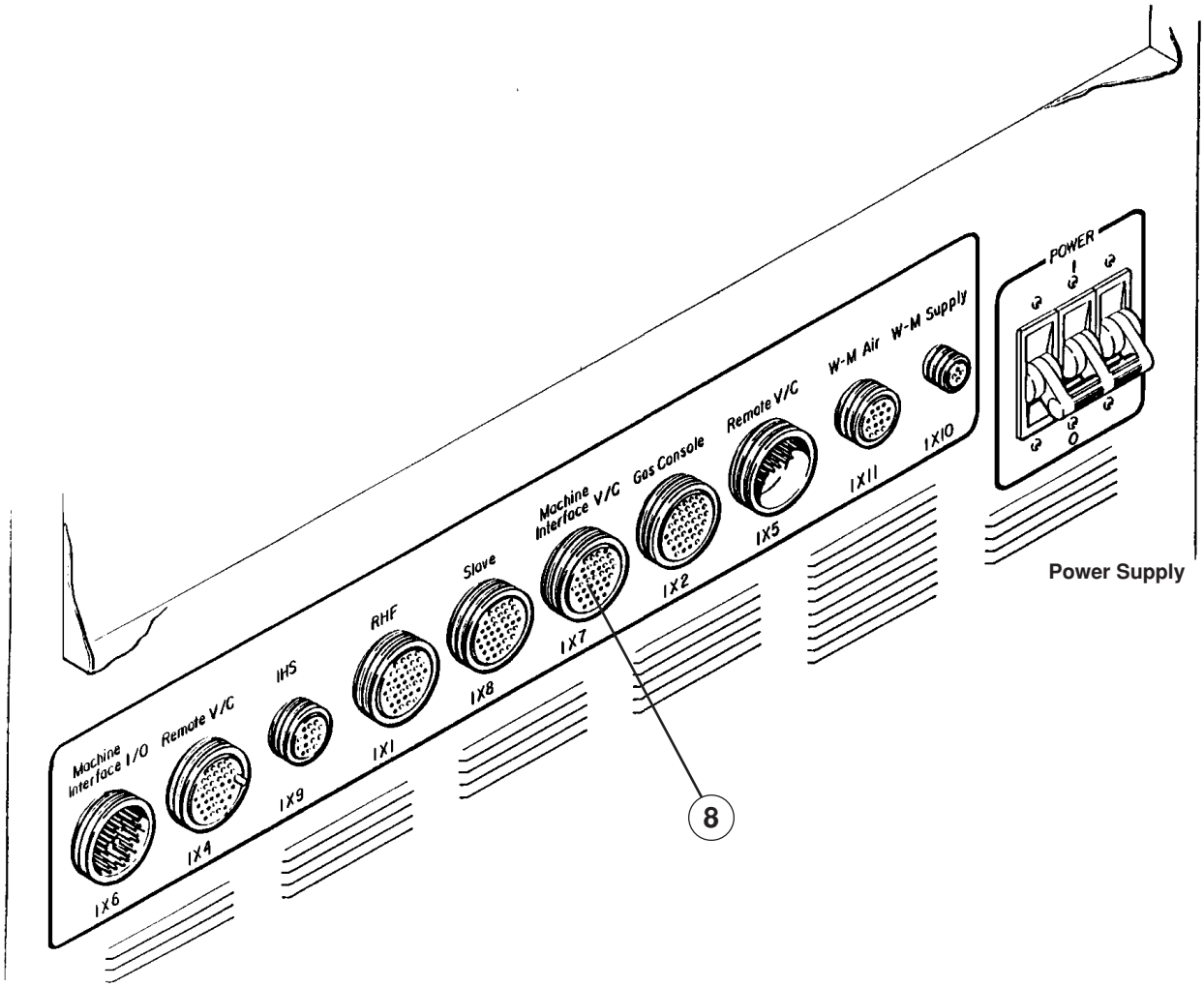

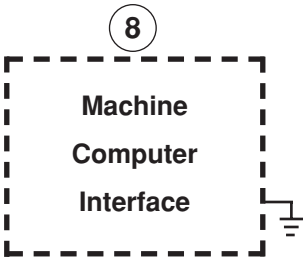

Figure 4-8 Machine Interface V/C Cable Connection – PS to Computer Interface

Power Supply Connections (cont.)

See IM191 RCC Installation for installation of Remote Current Control to HT4001.

9 *Remote Serial Cable – PS to Remote V/C*

Connect this cable from the power supply to either the digital or programmable remote.

PS End **V/C End**

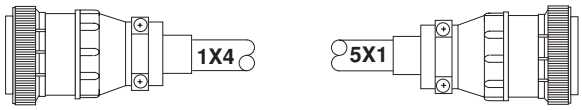

Part No.	Length	Part No.	Length
023911	15 ft (4.5 m)	023883	150 ft (46 m)
023878	25 ft (7.6 m)	023884	200 ft (61 m)
023879	50 ft (15 m)	023885	250 ft (76 m)
023880	75 ft (23 m)	023886	275 ft (84 m)
023881	100 ft (30.5 m)	023887	300 ft (92 m)
023882	125 ft (38 m)		

RUN LIST – REMOTE SERIAL CABLE			
SIGNAL	PS END	COLOR	V/C END
SID DATA	4	GREEN	1
SID COMMON	8	BLACK	2
SOD DATA	9	RED	3
SOD COMMON	15	BLACK	6
SHIELD	13	GRN/BLACK	
SHIELD	14	RED/BLACK	
SHIELD-(AC)	31	WHT/BLK	
AC POWER	35	WHITE	7
AC POWER	36	BLACK	8
		KEY	5

10 *Remote V/C Cable – PS to Remote V/C*

Connect this cable from the power supply to the programmable remote.

PS End **V/C End**

Part No.	Length	Part No.	Length
023834	15 ft (4.5 m)	023839	150 ft (46 m)
023835	25 ft (7.6 m)	023840	200 ft (61 m)
023836	50 ft (15 m)	023899	250 ft (76 m)
023837	75 ft (23 m)	023900	275 ft (84 m)
023838	100 ft (30.5 m)	023901	300 ft (92 m)
023898	125 ft (38 m)		

SIGNAL	PS END	COLOR	V/C END
Current 20	1	Black	1
Current 40	2	Blue	2
Current 80	3	Green	3
Current 100	4	White	4
Current 200	5	Orange	5
Current 400	6	Red	6
Common	7	Black/White	7

SIGNAL	PS END	COLOR	V/C END
Voltage 5	8	Blue/White	8
Voltage 10	9	Blue/Black	9
Voltage 20	10	Green/Black	10
Voltage 40	11	Orange/Black	11
Voltage 80	12	Red/Black	12
Voltage 100	13	Green/White	13
Voltage 200	14	Red/White	14
Spare	15	White/Black	15
Shield	16	Shld	16

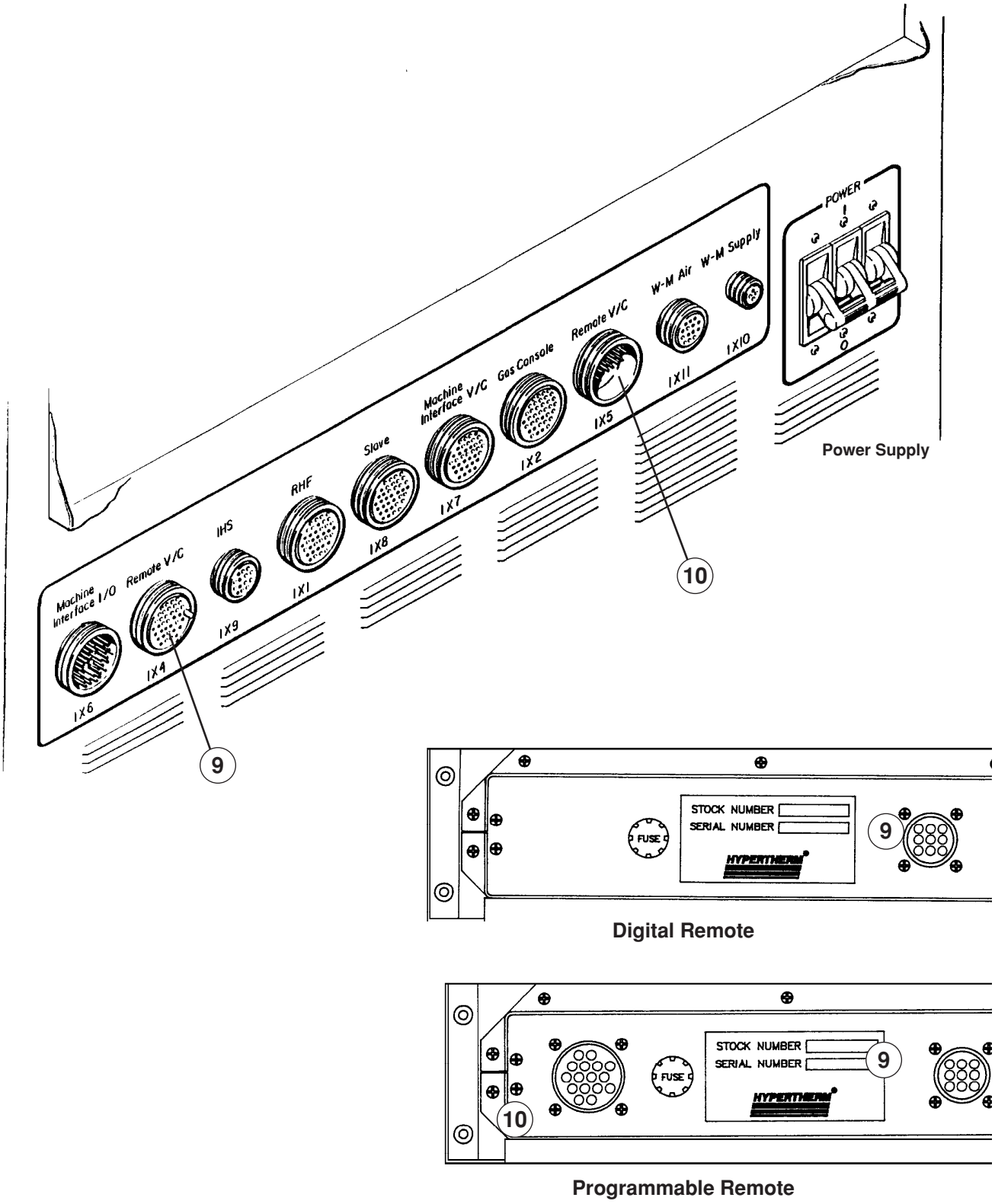

Figure 4-9 Remote Serial and V/C Cables – PS to Remote V/C

Power Supply Connections (cont.)

11 ***Timer/Counter Cable – PS to Timer/Counter***

Pass the timer/counter cable through one of the 2" bushings in the lower rear of the HT4001 power supply and connect to TB3. TB3 is located on the inside rear wall of the power supply.

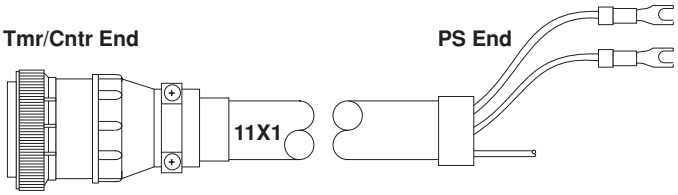

Part No.	Length	Part No.	Length
023789	10 ft (3 m)	023792	75 ft (23 m)
023790	25 ft (7.5 m)	023793	100 ft (30.5 m)
023791	50 ft (15 m)	023794	150 ft (46 m)

PS TB3 END	COLOR	TIMER/CNTR END	DESCRIPTION
53	Wht	1	Starts & Arc Time
52	Black	2	Starts & Arc Time
8	Drain	3	Drain
50	Red	15	Error Counter
51	Black	16	Error Counter
3	Drain	12	Drain

12 ***IHS Interface Cable – PS to IHS***

See pages 4-32 through 4-35 for remaining IHS connections.

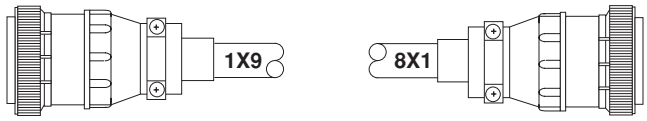

Part No.	Length	Part No.	Length
023859	25 ft (7.5 m)	023862	100 ft (30.5 m)
023860	50 ft (15 m)	023863	150 ft (46 m)
023861	75 ft (23 m)	023864	200 ft (61 m)

PS END	COLOR	IHS MODULE END	DESCRIPTION
1	Red	1	IHS Complete Signal
4	Black	4	IHS Complete Common
8	Shield		Drain
2	Green	2	Upper Limit Switch Signal
5	Black	3	Upper Limit Switch Common
9	Shield	5	Drain
11	Blk	9	AC Power
14	White	8	AC Power
7	Shield		AC Drain
		7	Key

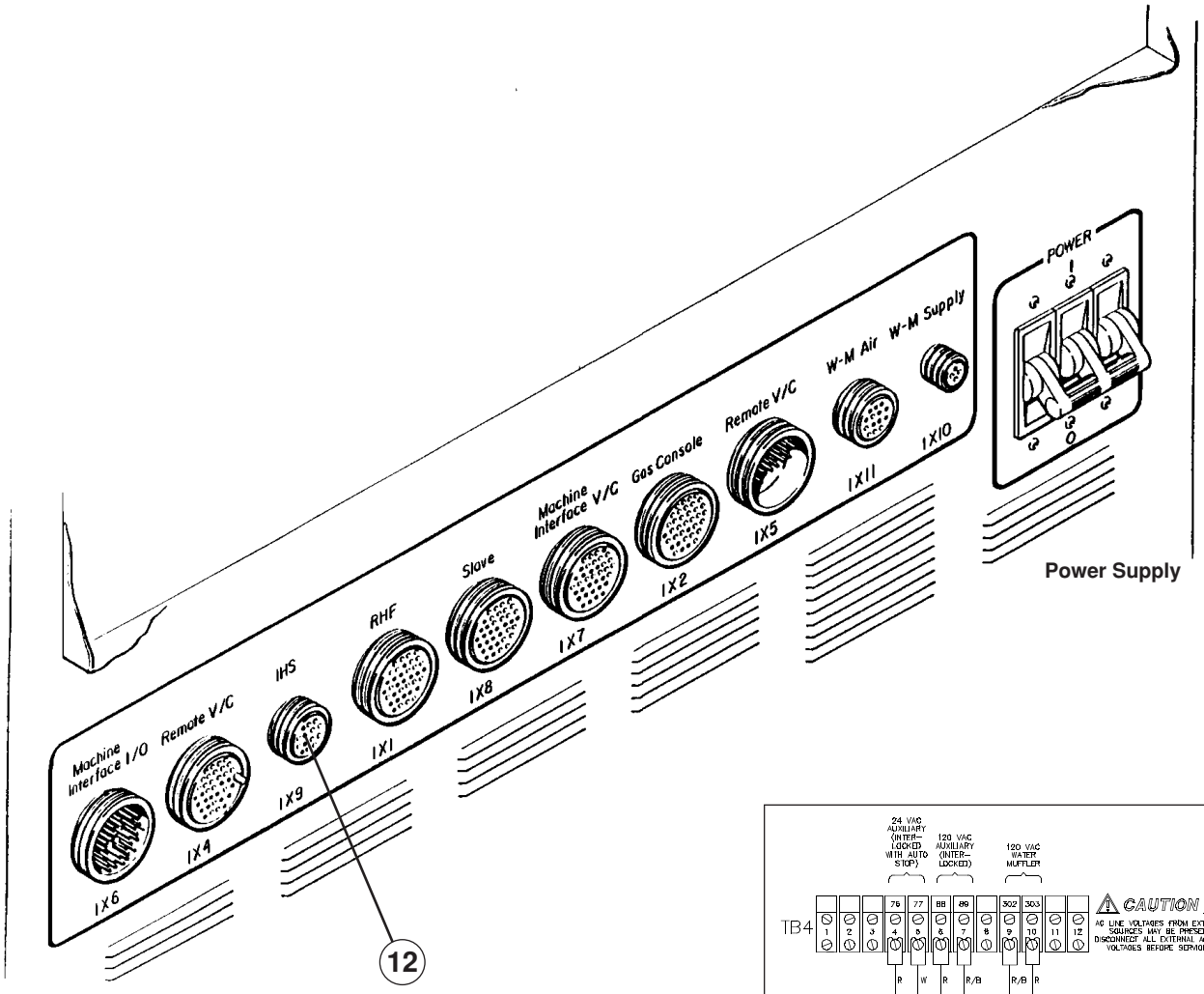

Power Supply

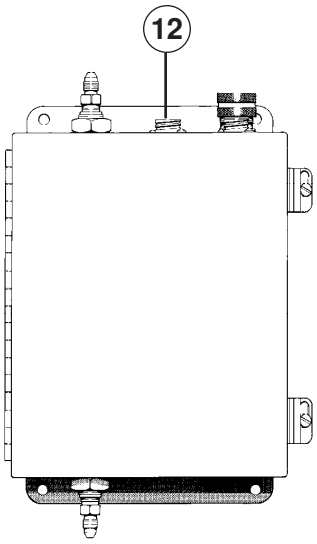

IHS Module

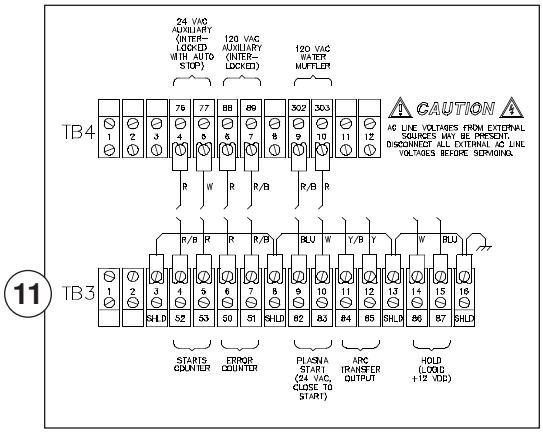

TB3 – Power Supply

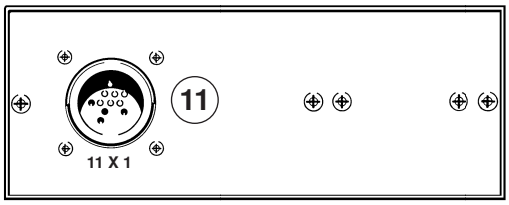

Timer/Counter

Figure 4-10 Timer/Counter Cable and IHS Cable Connections – PS to T/C PS to IHS

Power Supply Connections (cont.)

13 ***Water Muffler Air Control Cable – PS to Water Muffler Air Control Box***

See water muffler instruction manual IM173 for remaining connections to water muffler, and detailed information on the water muffler system.

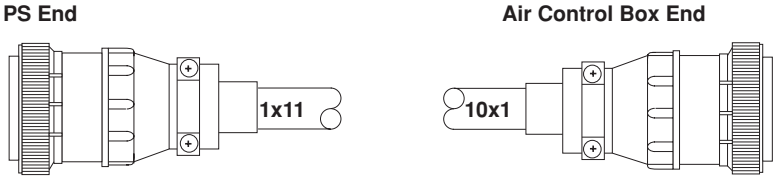

Part No.	Length	Part No.	Length
023905	25 ft (7.5 m)	023908	100 ft (30.5 m)
023906	50 ft (15 m)	023909	150 ft (46 m)
023907	75 ft (23 m)	023910	200 ft (61 m)

PS END (1X11)	COLOR	WM AIR CNTRL END (10X1)	SIGNAL
11	Wht	1	Water Muffler Hot
12	Black	2	AC Neutral
13	Red	3	Contactor Coil
14	Brown	4	Water Muffler Coil
6	Green	5	Ground

14 ***Water Muffler Pump Cable – PS to Water Muffler Pump***

See water muffler instruction manual IM173 for remaining connections to water muffler, and detailed information on the water muffler system.

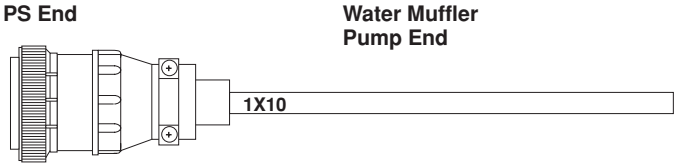

Part No.	Length
023866	50 ft (15 m)
023867	75 ft (23 m)
023868	100 ft (31 m)

PS END (1X10)	COLOR	SIGNAL
2	Black	Water Muffler Coil
4	White	AC Neutral
3	Green	Ground

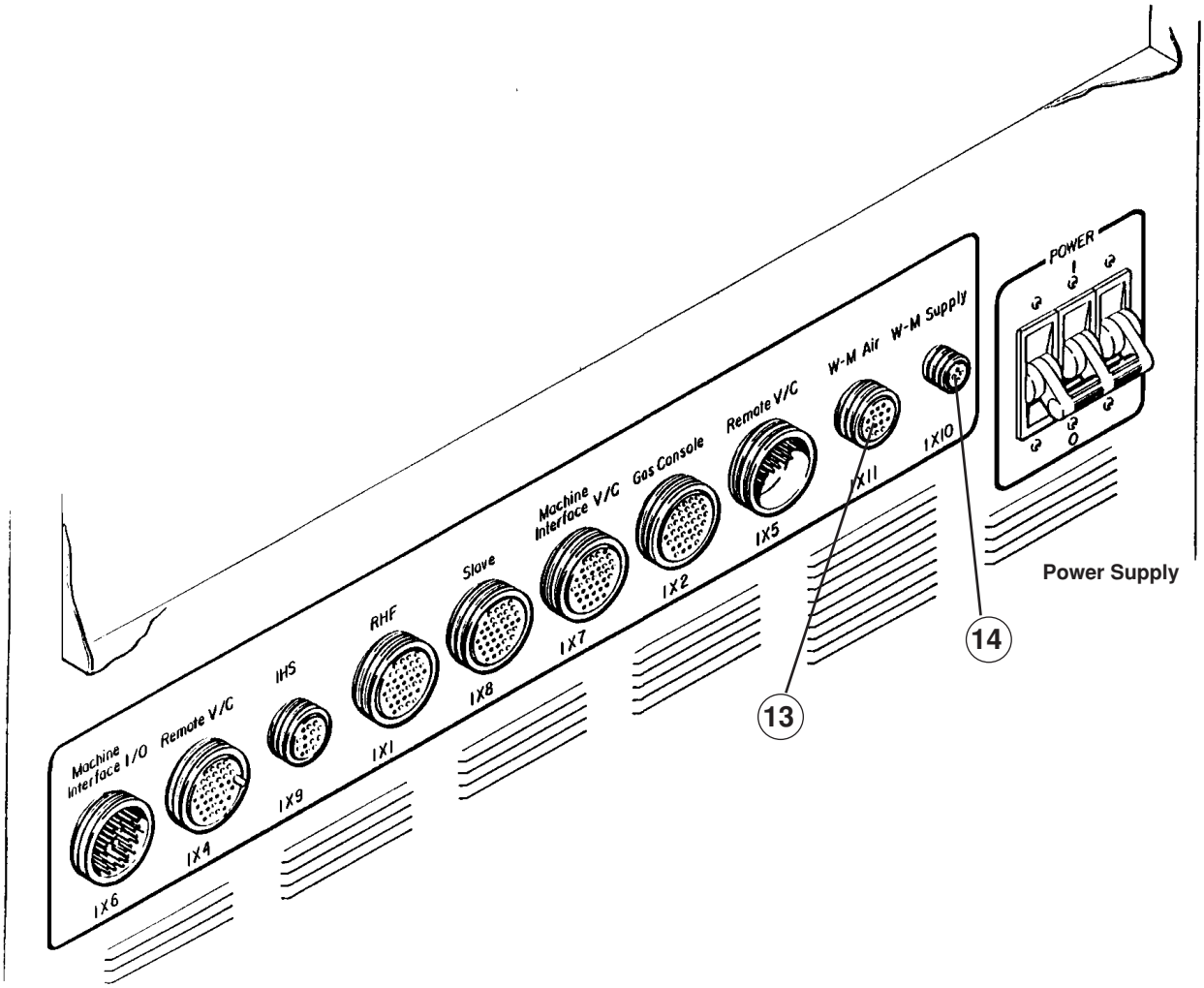

Figure 4-11 Water Muffler Connections – PS to Water Muffler

RHF Console Connections

See page 4-6 for power supply connections to RHF console.

(15) *Cooling Hose Set – RHF Console to Water Chiller*

There are two hoses in the hose set. For two-torch systems, double the hose order.

> **Caution** **Connect WATER OUT of the RHF console to RETURN of the water chiller, and connect WATER IN of the RHF console to DISCHARGE of the water chiller.**

See instruction manual IM241 (802410) for more information on the water chiller.

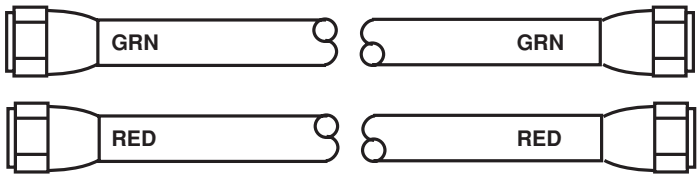

Part No.	Length	Part No.	Length
028652	10 ft (3 m)	028443	75 ft (23 m)
028440	15 ft (4.5 m)	028444	100 ft (30.5 m)
028653	20 ft (6 m)	028445	150 ft (46 m)
028441	25 ft (7.5 m)	028637	200 ft (61 m)
028442	50 ft (15 m)		

(16) *Injection Water Hose – RHF Console to Gas Console*

Note that the water injection hose is left-hand threaded. Turn counterclockwise to tighten.

See pages 4-26 through 4-29 for remaining gas console connections.

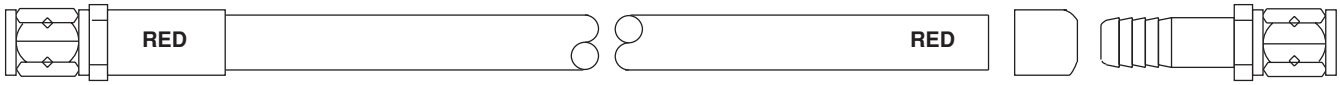

Part No.	Length	Part No.	Length	Part No.	Length
024335	26 in (.6 m)	024033	15 ft (4.5 m)	024208	45 ft (13.7 m)
024315	5 ft (1.5 m)	024018	20 ft (6 m)	024258	50 ft (15 m)
024046	6 ft (1.8 m)	024034	25 ft (7.5 m)	024179	53 ft (16 m)
024032	10 ft (3 m)	024035	30 ft (9 m)	024128	60 ft (18 m)
024261	11.5 ft (3.5 m)	024036	35 ft (10.5 m)	024345	75 ft (23 m)
024130	12 ft (3.6 m)	024037	40 ft (12.2 m)	024346	100 ft (30.5 m)
024132	14 ft (4.2 m)				

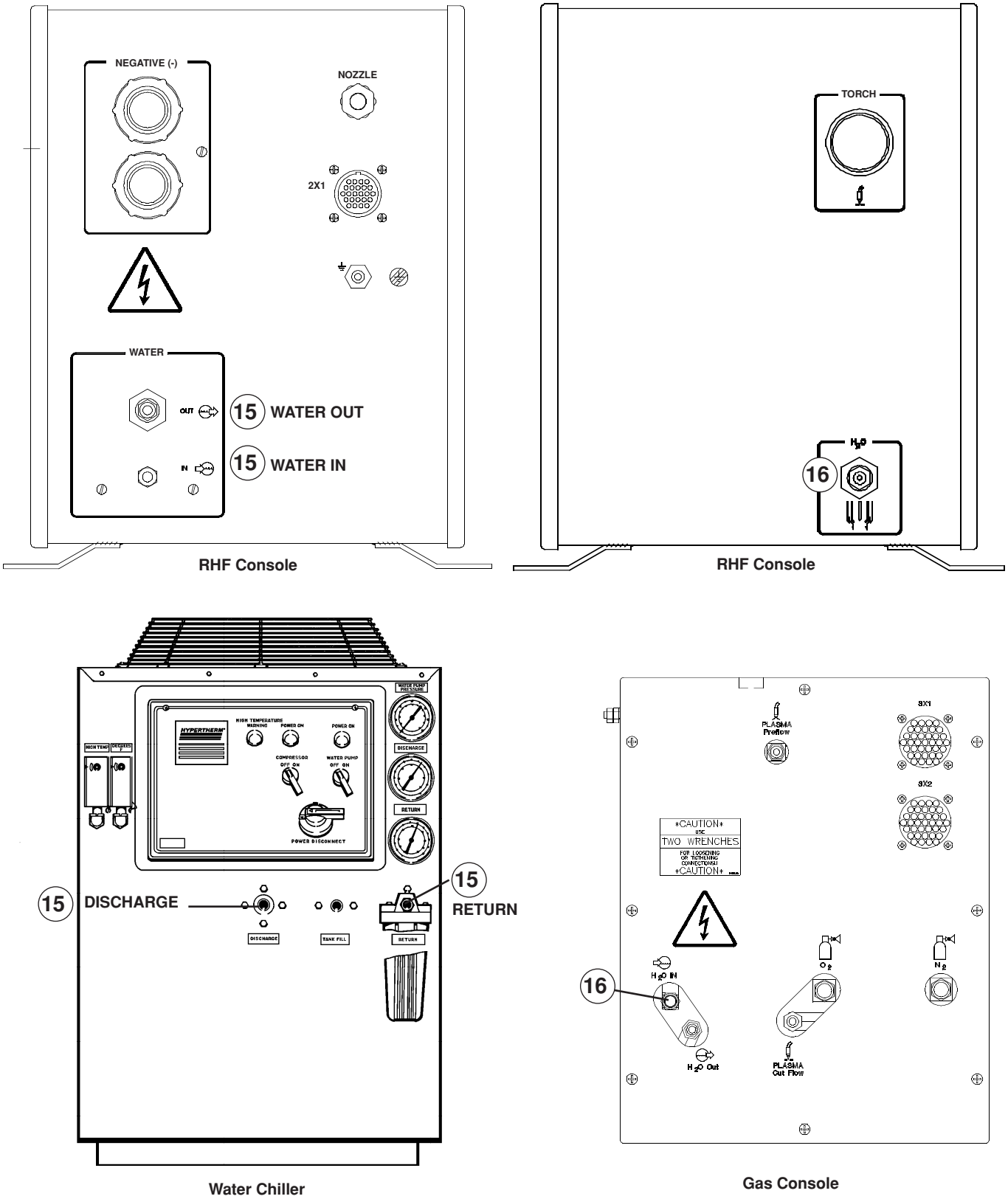

Figure 4-12 RHF Connections to Water Chiller and Gas Console

RHF Console Connections (cont.)

17 *Shielded Torch Leads – RHF Console to Torch*

Routing the Torch Leads

The leads must be routed between the RHF console and the torch before making connections. You will usually need to route the leads through a festoon or a power track. **Do not have the torch connected when routing leads.**

Connecting the Torch Leads to the RHF Console

Pass the torch leads through the brass ring of the RHF console and make connections as shown in Figure 4-13. The fittings on the cathode block are color-coded to correspond with the bands on the torch leads. Match color to color. Connect pilot arc lead as shown.

Connecting the Torch Leads to the Torch

1. Slide the insulating sleeve over the torch leads with the threaded end pointing towards the unconnected torch. (The insulating sleeve will screw onto the torch later.)

2. Using a 9/16" open-end wrench on the two largest torch fittings and a 1/2" open-end wrench on the two largest lead fittings, connect the leads to the torch. Note color code on torch and torch leads.

3. Attach and **hand tighten** the white pilot arc lead from the torch leads to the corresponding connector on the torch body.

See page 4-26 to connect injection water hose to torch, and 4-30 to connect plasma gas lead to torch. See also page 4-38 to mount the torch to the torch mounting bracket.

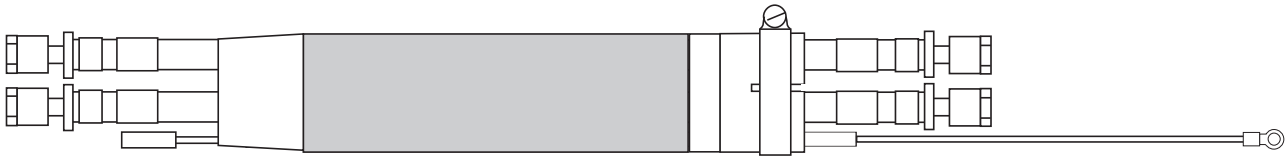

Part No.	Length	Part No.	Length
028508	10 ft (3 m)	028513	35 ft (10.5 m)
028509	15 ft (4.5 m)	028514	40 ft (12 m)
028510	20 ft (6 m)	028515	45 ft (13.5 m)
028511	25 ft (7.5 m)	028516	50 ft (15 m)
028512	30 ft (9 m)		

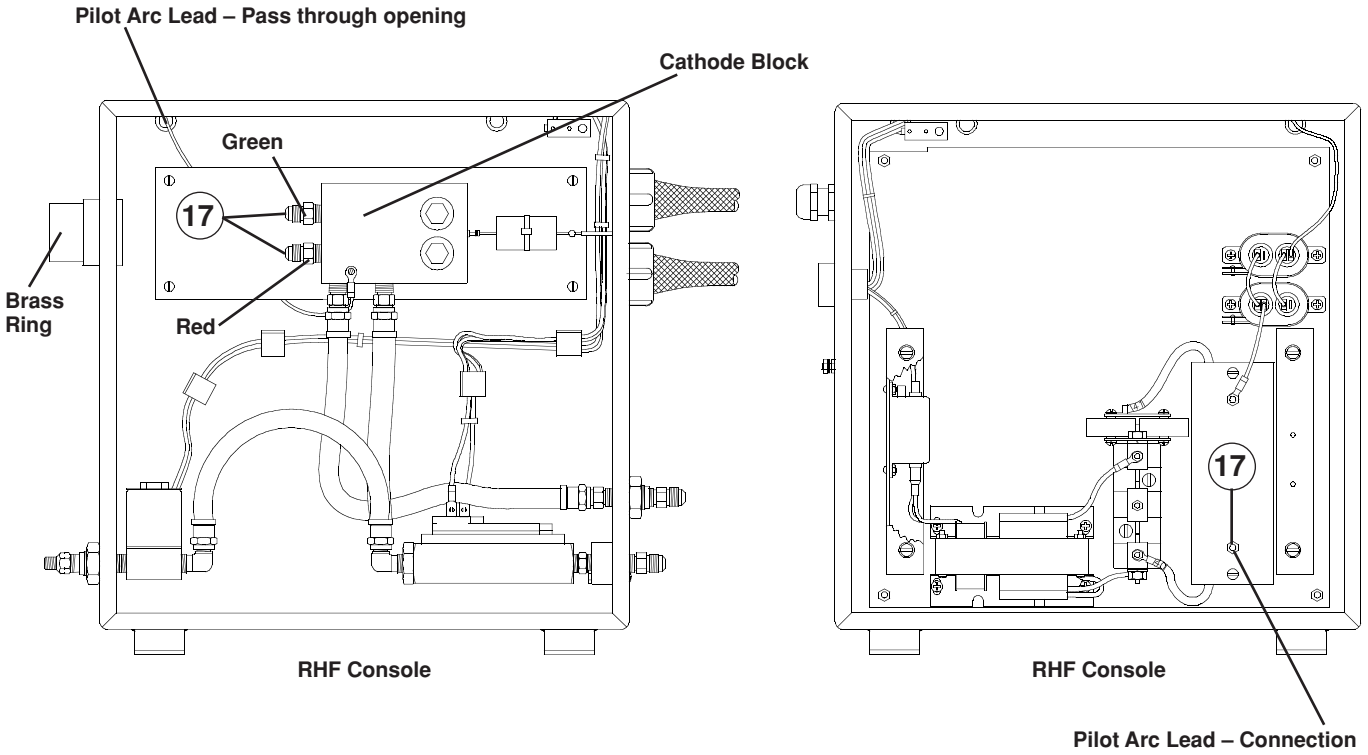

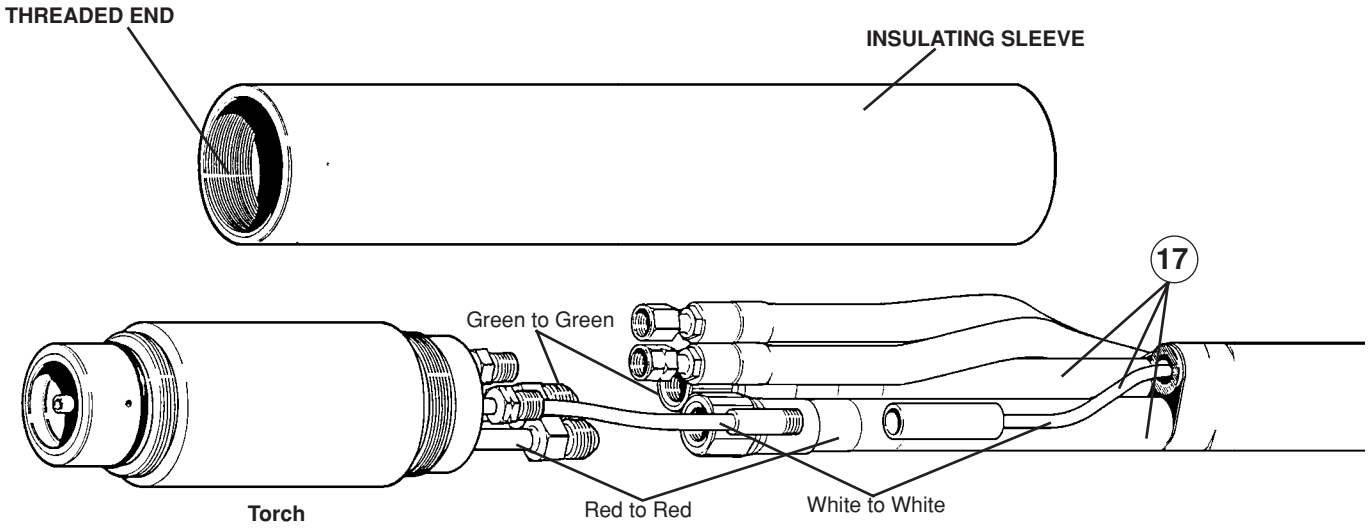

Figure 4-13 RHF Connections to Torch – Shielded Leads

Gas Console Connections

See page 4-10 for power supply connections to gas console, page 4-22 for RHF console connections to gas console and page 4-4 for torque specifications.

18 *Oxygen Supply Hose – Gas Console to Oxygen Supply*

Part No.	Length	Part No.	Length
024204	15 ft (4.5 m)	024206	100 ft (30.5 m)
024205	25 ft (7.5 m)	024159	150 ft (46 m)
024155	50 ft (15 m)	024333	200 ft (61 m)

Note: If cutting with nitrogen as the plasma gas, the oxygen hose does not need to be connected to the gas console.

19 *Nitrogen Supply Hose – Gas Console to Nitrogen Supply*

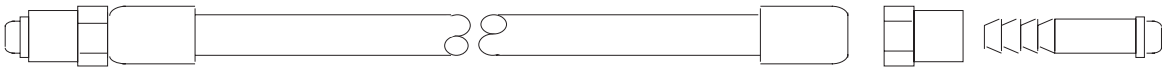

Part No.	Length	Part No.	Length
024210	10 ft (3 m)	024148	75 ft (23 m)
024203	15 ft (4.5 m)	024116	100 ft (30.5 m)
024232	20 ft (6 m)	024120	150 ft (46 m)
024134	25 ft (7.5 m)	024185	180 ft (55 m)
024211	35 ft (10.5 m)	024124	200 ft (61 m)
024112	50 ft (15 m)		

Note: If cutting with oxygen as the plasma gas, nitrogen must also be connected to the gas console to achieve the proper oxygen-nitrogen mixtures in the preflow and cut flow conditions.

20 *Injection Water Hose – Gas Console to Torch*

1. Slide the injection water hose through the torch insulating sleeve.
2. Using a 7/16" open-end wrench on the left-handed torch fitting and a 7/16" open-end wrench on the left-handed injection water hose fitting, turn the water-hose fitting in a counterclockwise direction to tighten.
3. Make injection water hose connection at gas console (Fig. 4-14).

See page 4-30 to connect plasma gas lead to torch.

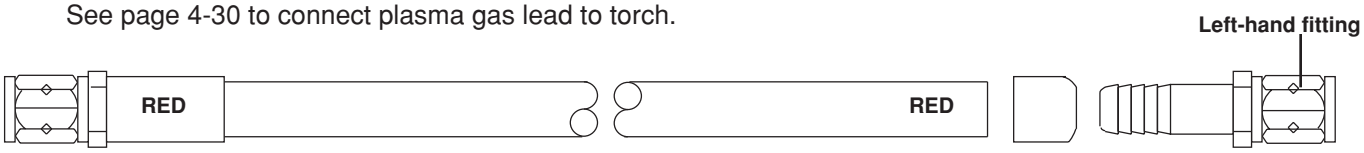

Part No.	Length	Part No.	Length	Part No.	Length
024335	26 in (.6 m)	024033	15 ft (4.5 m)	024208	45 ft (13.7 m)
024315	5 ft (1.5 m)	024018	20 ft (6 m)	024258	50 ft (15 m)
024046	6 ft (1.8 m)	024034	25 ft (7.5 m)	024179	53 ft (16 m)
024032	10 ft (3 m)	024035	30 ft (9 m)	024128	60 ft (18 m)
024261	11.5 ft (3.5 m)	024036	35 ft (10.5 m)	024345	75 ft (23 m)
024130	12 ft (3.6 m)	024037	40 ft (12.2 m)	024346	100 ft (30.5 m)
024132	14 ft (4.2 m)				

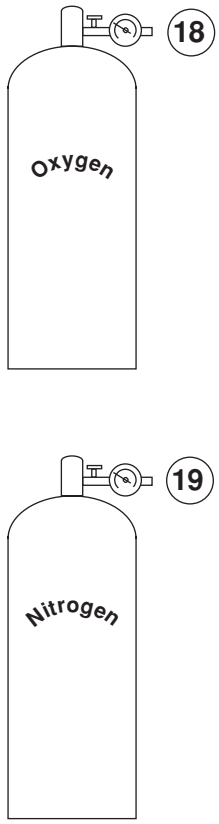

Gas supplies

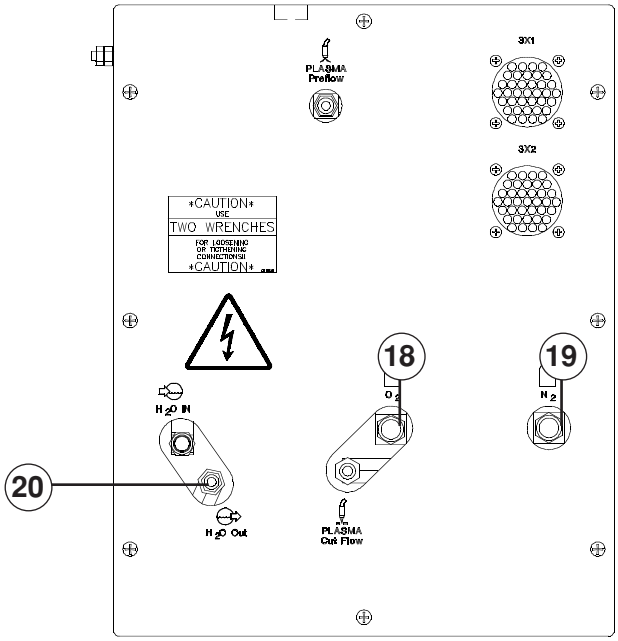

Gas Console

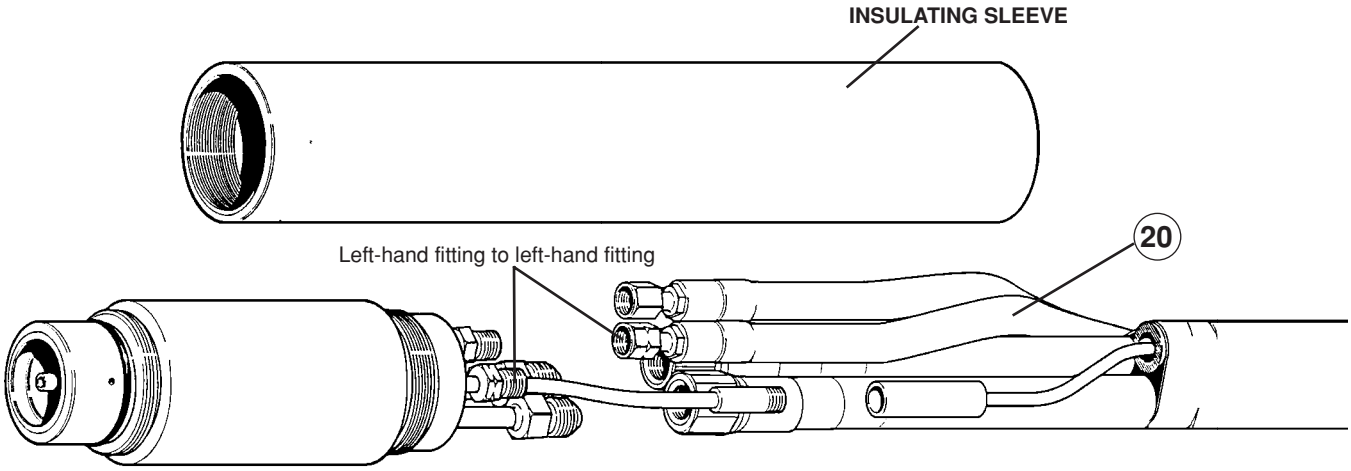

Torch

Figure 4-14 Gas Console Connections – Gas Console to Gas Supplies
Gas Console to Torch

Gas Console Connections (cont.)

21 ***Preflow Gas Hose – Gas Console to Motor Valve Console***

Note that this hose is left-hand threaded and is tightened in a counterclockwise direction.

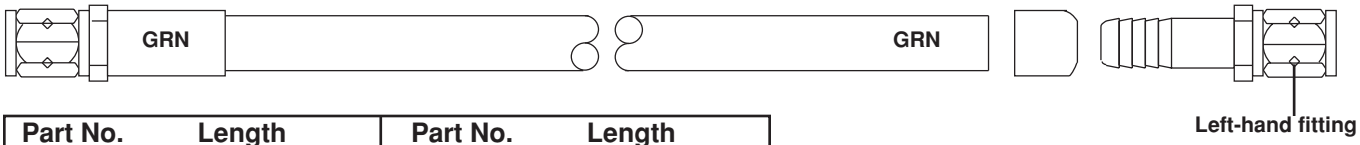

Part No.	Length	Part No.	Length
024316	5 ft (1.5 m)	024310	40 ft (12 m)
024307	10 ft (3 m)	024323	45 ft (13.5 m)
024320	15 ft (4.5 m)	024311	50 ft (15 m)
024308	20 ft (6 m)	024420	56 ft (17 m)
024321	25 ft (7.5 m)	024367	60 ft (18 m)
024309	30 ft (9 m)	024357	75 ft (23 m)
024322	35 ft (10.5 m)		

22 ***Cut Flow Gas Hose – Gas Console to Motor Valve Console***

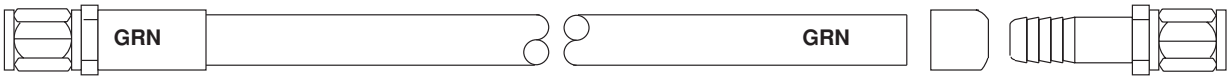

Part No.	Length	Part No.	Length
024317	5 ft (1.5 m)	024031	40 ft (12 m)
024026	10 ft (3 m)	024207	45 ft (13.5 m)
024027	15 ft (4.5 m)	024340	50 ft (15 m)
024017	20 ft (6 m)	024419	56 ft (17 m)
024028	25 ft (7.5 m)	024127	60 ft (18 m)
024029	30 ft (9 m)	024343	75 ft (23 m)
024030	35 ft (10.5 m)		

23 ***Gas Console/Motor Valve Console Cable – Gas Console to Motor Valve Console***

See page 4-30 for remaining motor valve console connections.

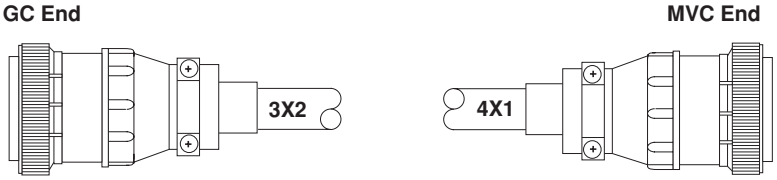

SIGNAL	GC END	COLOR	MVC END
SV4A Preflow/Cutflow	16	Black	16
SV4A Preflow/Cutflow	17	Yellow	17
Ground	10	Shield	10
SV4B Preflow/Cutflow	23	Red	23
SV4B Preflow/Cutflow	24	Yellow	24
Ground	25	Shield	25
SV5 Plasma Off	29	Black	29
SV5 Plasma Off	30	Red	30
Ground	34	Shield	34
MV1 Decrease	11	Black	11
120VAC Neut.	12	Brown	12
Ground	18	Shield	18
MV1 Increase	14	Red	14
Ground	21	Shield	21

Part No.	Length	Part No.	Length
023619	5 ft (1.5 m)	023650	40 ft (12 m)
023646	15 ft (4.5 m)	023651	45 ft (13.5 m)
023647	20 ft (6 m)	023584	50 ft (15 m)
023583	25 ft (7.5 m)	023811	56 ft (17 m)
023648	30 ft (9 m)	023691	60 ft (18 m)
023649	35 ft (10.5 m)	023654	75 ft (23 m)

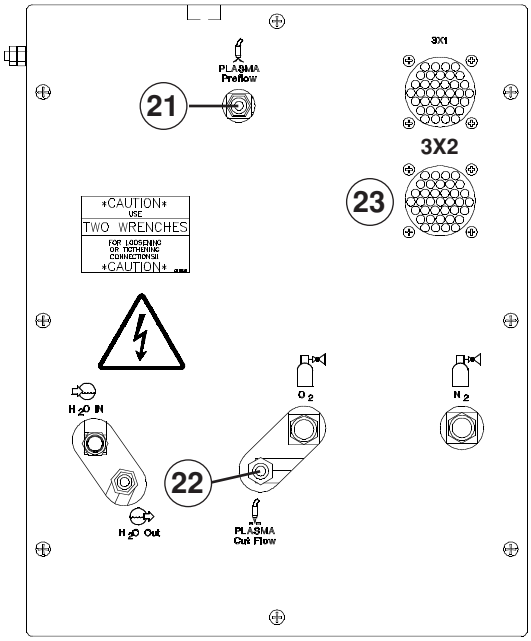

Gas Console

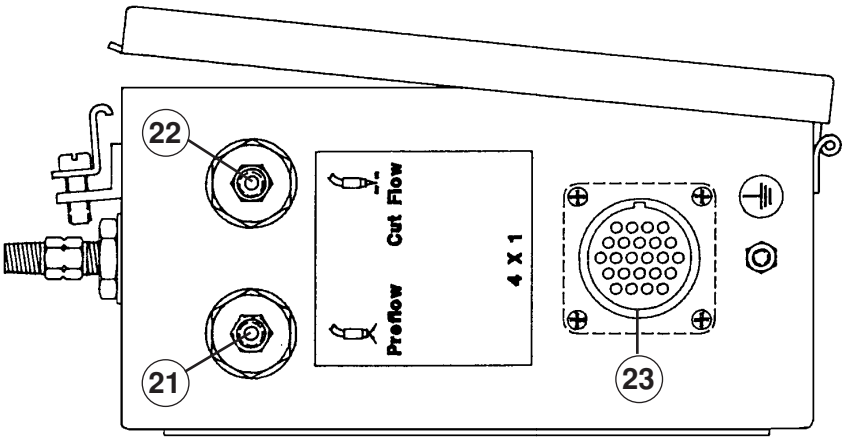

Motor Valve Console

Figure 4-15 Gas Console Connections – Gas Console to Motor Valve Console

Motor Valve Console Connections

See page 4-28 for motor valve console connections to gas console. Make torch connections on pgs 4-24 and 4-26 before making these motor valve console to torch connections. See page 4-4 for torque specifications.

(24) *Motor Valve Console Lead Assembly – Motor Valve Console to Torch*

1. Disconnect the plasma off-valve lead from the off valve.
2. Connect one end of the plasma off-valve lead to the remaining lead fitting of the torch. Use 7/16" open-end wrenches to tighten this connection (Fig. 4-16).
3. Slide the Insulating sleeve back over the torch body and screw together.
4. Reconnect the plasma off-valve lead to the off valve.
5. Make plasma-off cable and plasma lead connections at the motor valve console (Fig. 4-16).
6. Attach the torch to the torch mounting bracket. See *Mounting the Machine Torch* on page 4-38.

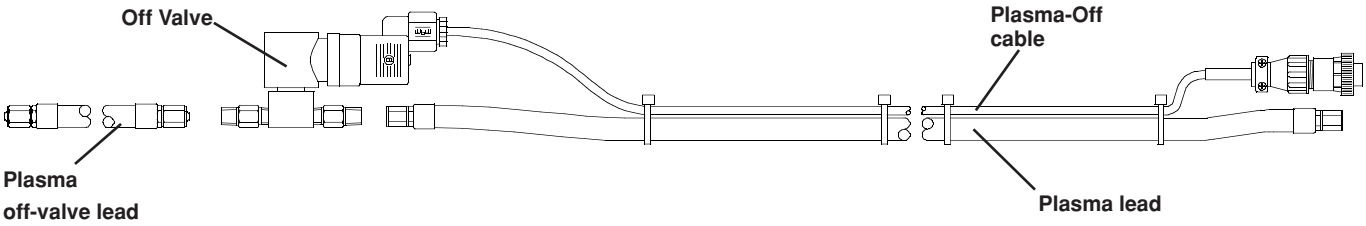

FUNCTION	MOTOR VALVE 4 X 2	WIRE COLOR	OFF-VALVE CONN.
Plasma Off & Vent	1	Black	1
	2	Red	2
Drain	3	N/A	Cut
Ground	4	Clear	⏚

Part No.	Length
129158	14 ft (4 m)

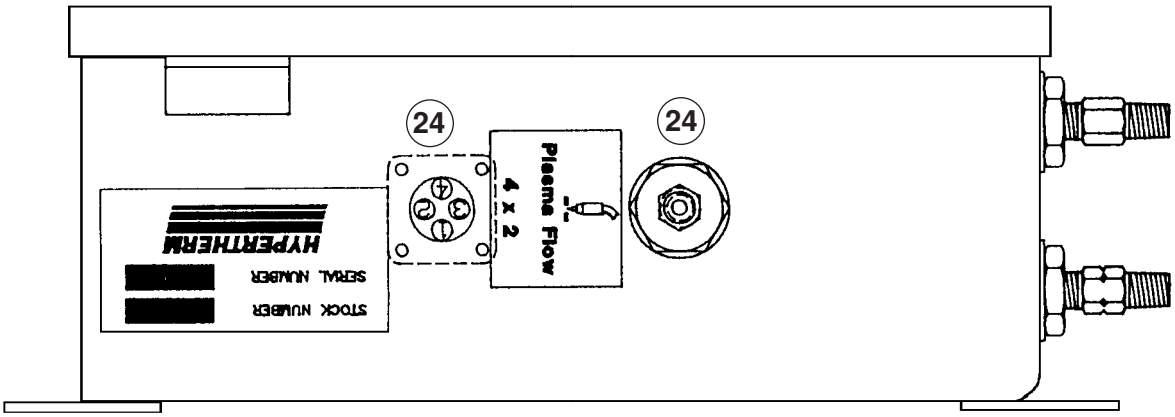

Motor Valve Console

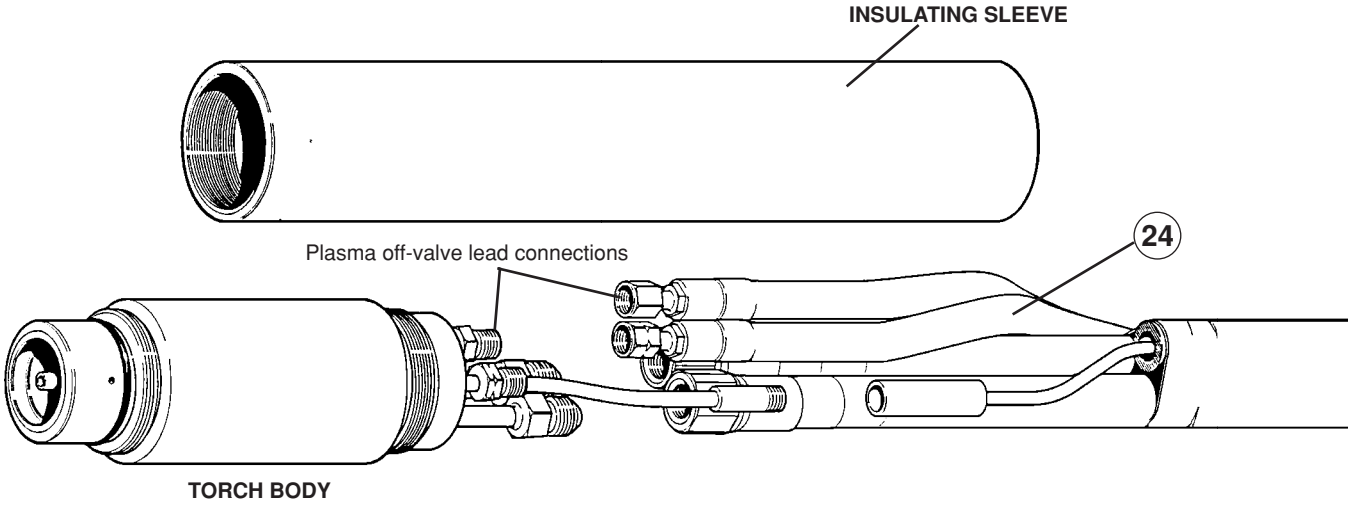

Figure 4-16 Motor Valve Console to Torch Connections

Initial Height Sensing Connections

See page 4-18 for IHS connection to power supply.

25 ***Air Supply Hose – IHS Module to Air Supply***
The customer must supply the 20 psig regulated shop air and the air hose. A #4 swivel fitting (015259) comes with the IHS console assembly.

26 ***Air Hose Assembly – IHS Module to Inductive Sensor Air Cylinder***
The 40-foot air hose is a component of the IHS leads packages – see page 7-47.

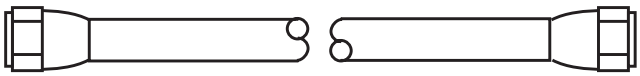

Part No.	Length
024144	40 ft (12 m)

27 ***Inductive IHS Torch Mounting Assembly***
The two inductive probes come as part of the IHS torch mounting subassembly – see page 7-47.

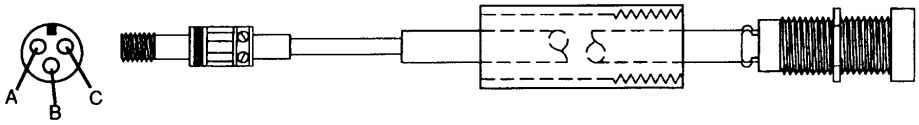

FUNCTION	PIN	COLOR
Power (+15 VDC)	A	Brown
Common	B	Blue
Signal	C	Black

Part No.
005074

28 ***IHS Sensor Cables - IHS Module to IHS Probes***
The 40-foot sensor cables are components of the IHS leads packages – see page 7-47.

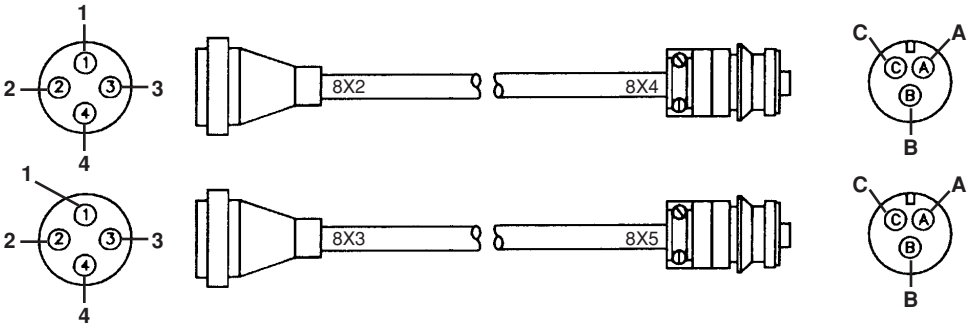

Part No.	Length
023888	2 ft (.6 m)
023869	40 ft (12 m)

Part No.	Length
023889	2 ft (.6 m)
023870	40 ft (12 m)

FUNCTION	IHS END	COLOR	PROBE END
Power (+15 VDC)	4	Red	A
Common	2	Black	B
Signal	1	Clear	C
Shield	3	Braid	

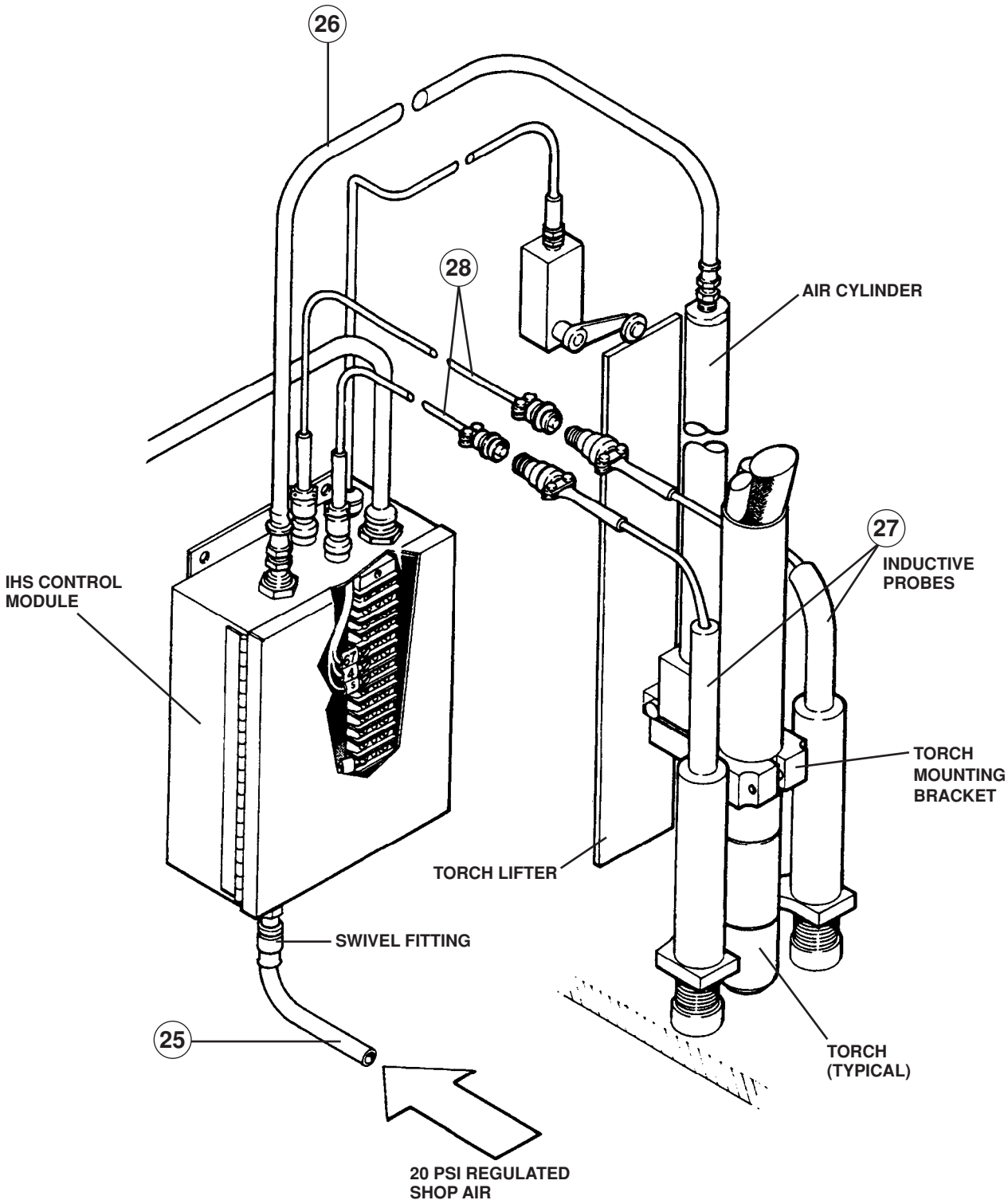

Figure 4-17 Initial Height Sensing Connections

Initial Height Sensing Connections (cont.)

Upper Limit Switch and Cable – Upper Limit Switch to IHS Module

Note: **The customer must supply the upper limit switch option.**

Switch specifications: **+12 VDC @ 1.2 ma**. Gold-type contacts preferred. Select a normally closed switch that opens when the lever is up (when the torch fully retracts). Install the upper limit switch behind the torch lifter as in figure 4-18.

Caution: Follow the cable installation procedure below to avoid electromagnetic interference problems with the torch lead set.

1. Use a shielded, twisted pair of 22-24 gauge wire (stranded). Use Belden #8761.
2. At the upper limit switch, connect the common wire (black) and signal wire (clear) to the upper limit switch. Cut the shield drain wire (uninsulated). Wrap the cut end with electrician's tape.
3. At the IHS control module, loosen the two (2) latches and open the front cover.
4. Route the cable through the strain relief to connect the cable wires to 1TB.
5. Connect the shield drain wire (uninsulated) to 1TB-10 (#S). This connects the cable shield to the HT4001 frame. The shield drain must not touch the IHS module case.
6. Connect the common wire (black) to 1TB-11 (#4).
7. Connect the signal wire (clear) to 1TB-12 (#67).

Note: If the upper limit switch signal comes from an interface on the cutting machine, the shield must be electrically isolated from other shields in other cables. Using a separate cable will avoid ground-loop problems.

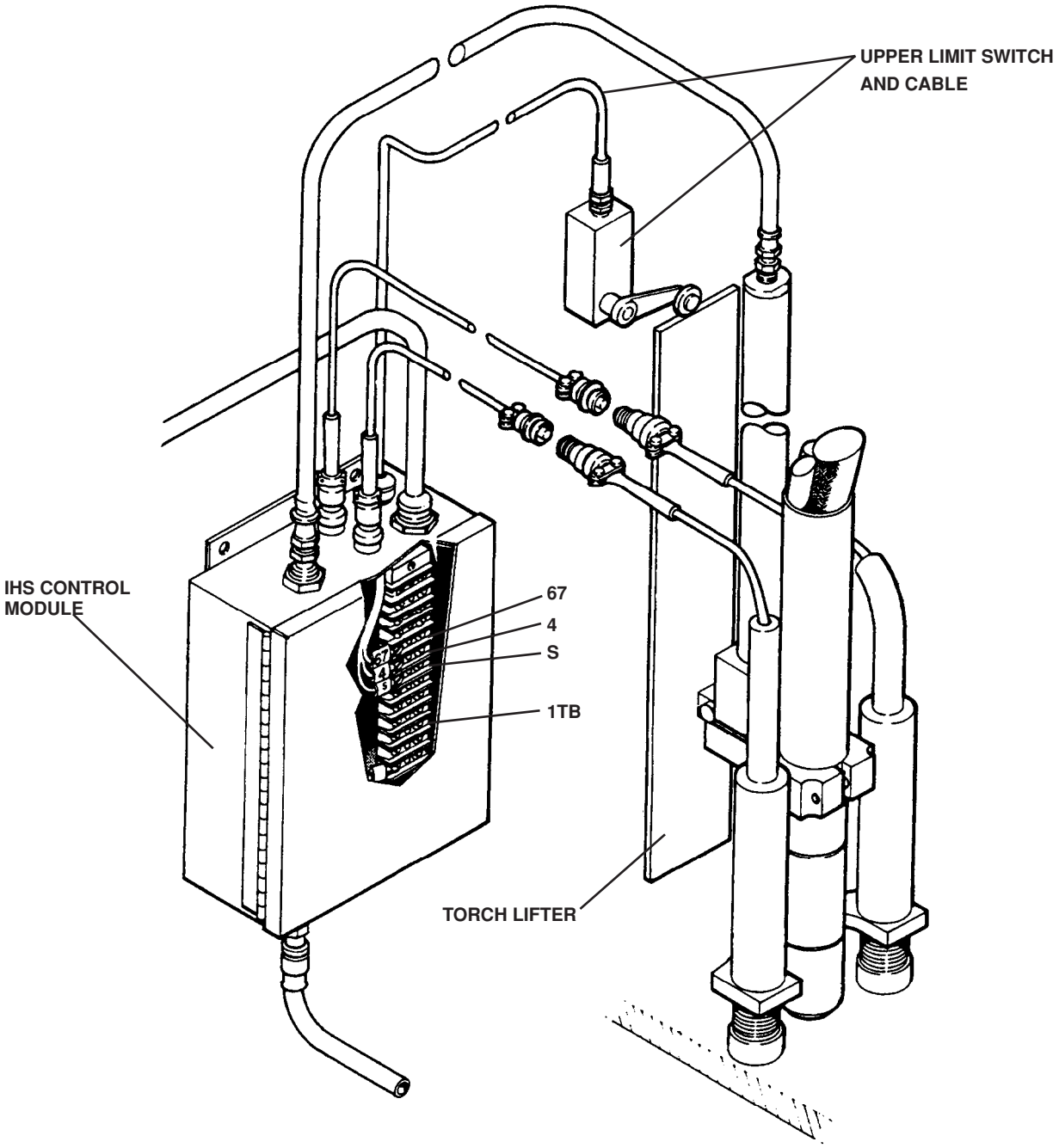

Figure 4-18 Initial Height Sensing Upper Limit Switch Connections

Optional Power Supply Connections

(29) ***Hold cable – PS to Second HT4001 Power Supply***
When using a multi-torch system, the hold cable interfaces the two HT4001 power supplies. Make connections at TB3 on both supplies. TB3 is located on the inside rear wall of the HT4001 power supply.

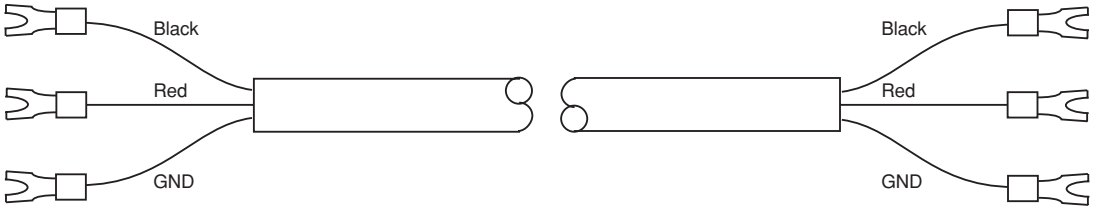

Part No.	Length	Part No.	Length
023340	15 ft (4.5 m)	023343	100 ft (30.5 m)
023341	25 ft (7.5 m)	023344	150 ft (46 m)
023342	50 ft (15 m)		

PS1 END	COLOR	PS2 END	FUNCTION
86	Black	86	Hold signal
87	Red	87	Hold common
PE	Shield	GND	Hold shield

(30) ***Slave Cable – PS to H401 or H601 Power Supply***

(31) ***Positive Lead – PS to H401 or H601 Power Supply***

(32) ***Negative Lead – PS to H401 or H601 Power Supply***

(33) ***Positive Lead – PS to Work Table (Additional lead needed when using slave)***

(34) ***Negative Lead – PS to RHF Console (Additional lead needed when using slave)***

When using more than 400 amps of cutting current, a slave power supply must be used with the HT4001 power supply. See Appendix A for details.

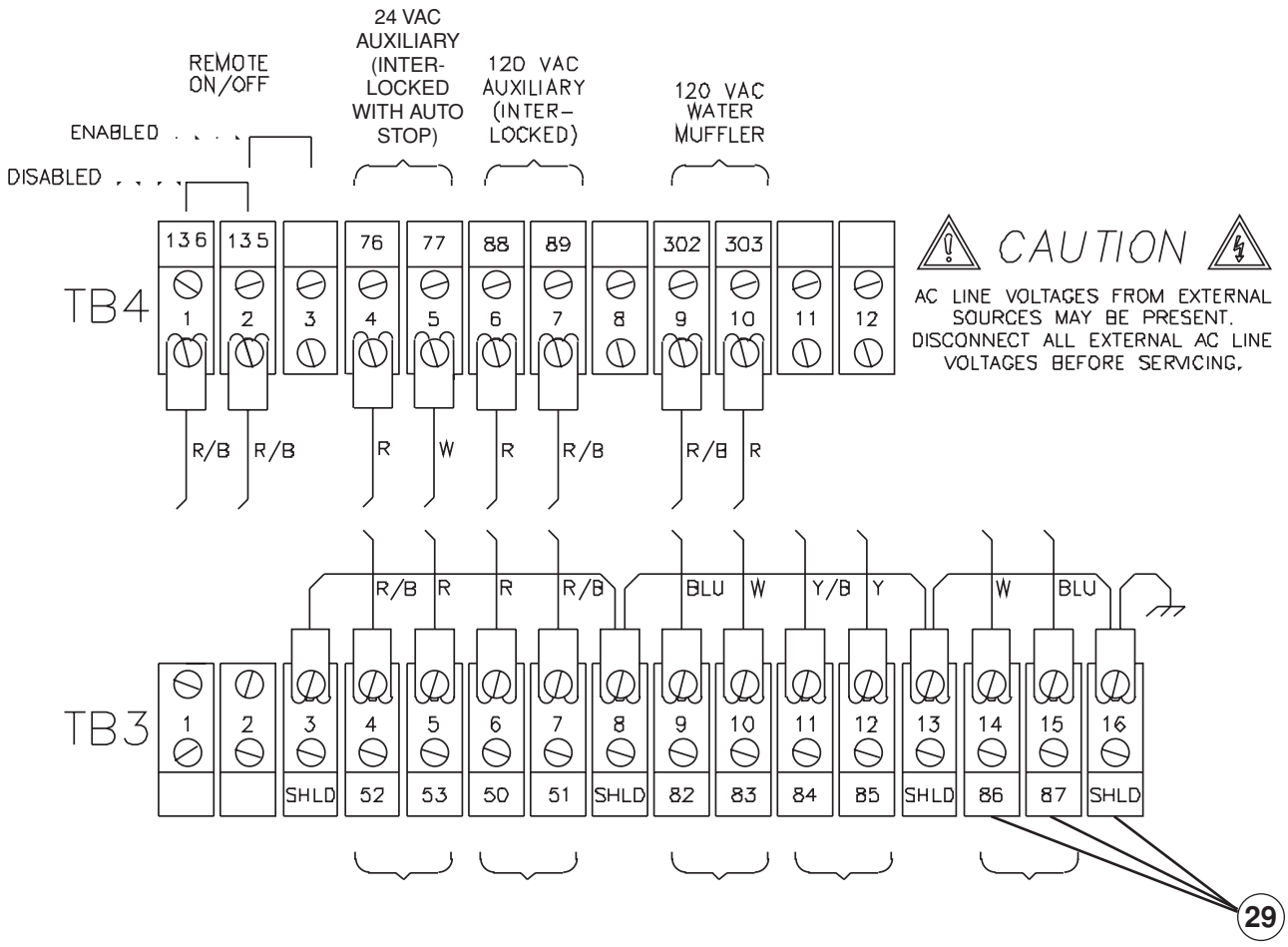

Figure 4-19 Hold Cable Connections to TB3

Mounting the Machine Torch

1. Install the machine torch (with torch leads attached) in the torch mounting bracket without IHS probes (Fig. 4-21) or the alternate torch mounting bracket (Fig. 4-20) if IHS is used.

2. Position the torch until the torch body extends all the way through the bracket, so that the bracket is now around the plastic torch sleeve and not touching the stainless steel torch body. Position the torch approximately .25 " (6 mm) from the workpiece.

3. Tighten the securing screw(s). See *Pre-Operation* in **Section 5** for final adjustment of torch.

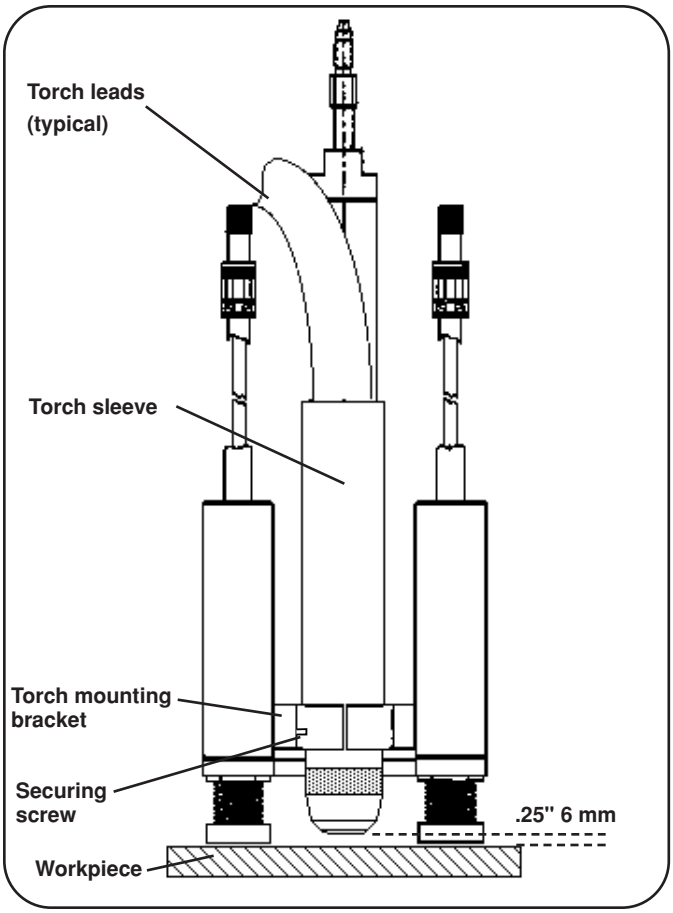

Figure 4-20 Mounting the Machine Torch (with IHS probes)

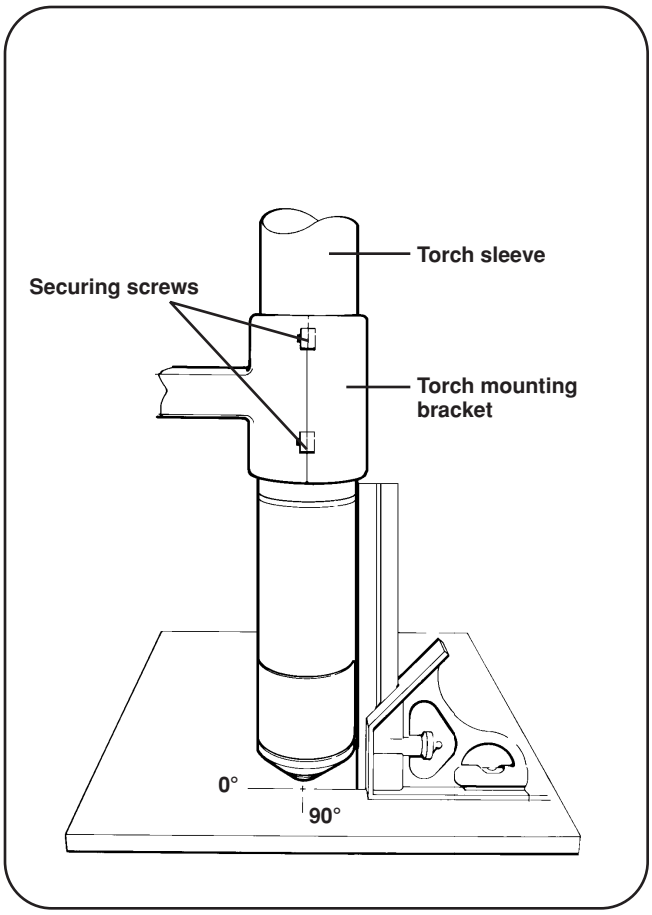

Figure 4-21 Torch Alignment (without IHS probes)

Torch Alignment

To guarantee the torch is at right angles to the workpiece, align the torch with a square at 0° and 90°. See figure 4-21.

Section 5

OPERATION

In this section:

Controls and Indicators 5-2
HT4001 Power Supply Front Panel 5-2
HT4001 Power Supply Rear Panel Control 5-2
Gas Console 5-4
Digital Remote (DR) V/C Module 5-6
Programmable Remote (PR) V/C Module 5-7
Timer/Counter 5-7
Pre-Operation System Checkout 5-8
Final Torch Adjustment 5-11
Daily Start-Up 5-13
How to Optimize Cut Quality 5-15
Tips for Table and Torch 5-15
Plasma Set-up Tips 5-15
Maximize the Life of Consumable Parts 5-15
Additional Factors of Cut Quality 5-16
Additional Improvements 5-17
Common Cutting Faults 5-18
Technical Questions 5-19
Cut Charts 5-19
Cut Chart and Consumable Parts Index 5-20
Changing Consumable Parts 5-33
Removal and Inspection 5-33
Replacement 5-33
Changing the Water Tube 5-35

Controls and Indicators

HT4001 Power Supply Front Panel (Fig. 5-1)

POWER

- **AC** Indicator
  Indicator illuminates when power up is complete.

- **DC** Indicator
  Illuminates when main contactor closes, indicating DC power is being supplied to the torch.

STATUS

- **RHF DOOR** LED
  When illuminated, indicates that one of the door interlock switches in the RHF console is disengaged. (RHF console door is open)

- **TRANSFORMER** LED
  When illuminated, indicates that either the power supply main transformer or one of the choppers is operating in an unacceptable temperature range.

- **COOLING WATER** LED
  When illuminated, indicates that the coolant flow to the electrode is inadequate.

- **PLASMA GAS** LED
  When illuminated, indicates that the plasma gas pressure is inadequate.

HT4001 Power Supply Rear Panel Control (Fig. 5-2)

POWER

- **UP** Position **(I)**
  In this position, AC is sent to the control transformer, turning the power supply on.

- **DOWN** Position **(O)**
  In this position, AC is cut off to the control transformer, turning the power supply off.

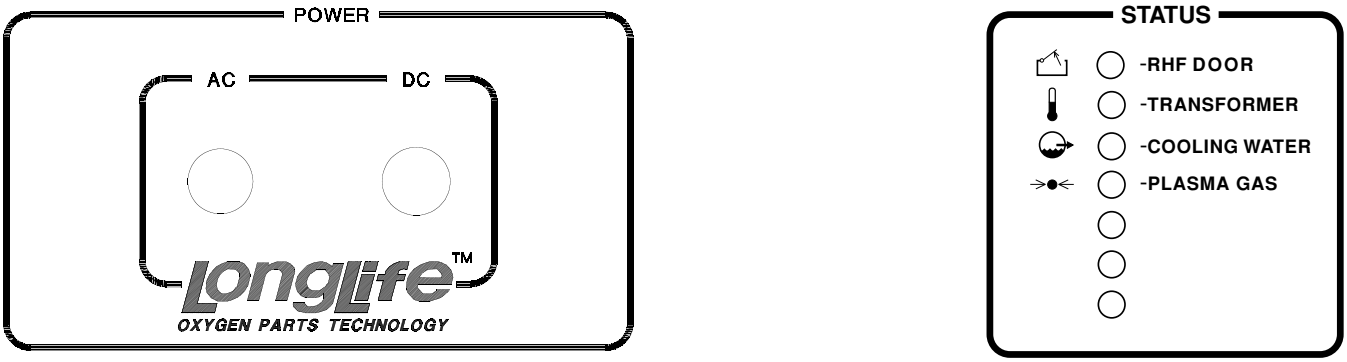

Figure 5-1 Power Supply Front Panel Indicators

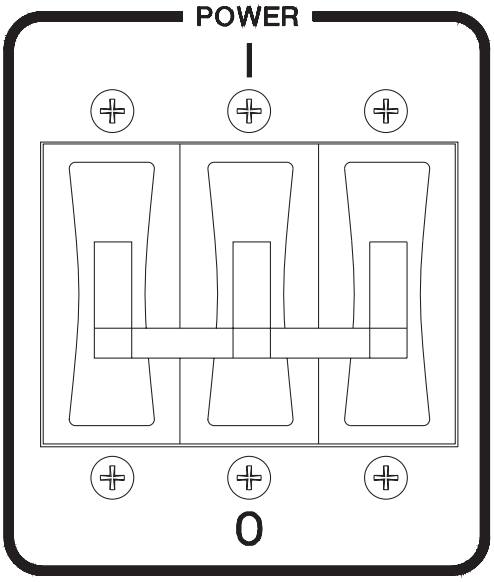

Figure 5-2 Power Supply Rear Panel Circuit Breaker

Controls and Indicators (cont.)

Gas Console (Fig. 5-3)

- **PLASMA N_2/O_2** Toggle Switch (S1)
  Selects the use of either nitrogen or oxygen as the plasma cutting gas.

- **Test Preflow** / **Run** / **Test Cut Flow** Toggle Switch (S2)

  Test Preflow – Used when setting the plasma gas preflow flow rates on the flow meters as specified in the *Cut Charts*. In this position the contactor is disabled.

  - **N_2** (FM1) and **O_2** (FM2) flow meters - In test preflow, indicate the percentage of plasma gas flow, nitrogen or oxygen/nitrogen mix, required for pre-cut conditions.

  - **N_2 Preflow** (MV2) and **O_2 Preflow** (MV3) metering valves - Adjusts plasma gas preflow.

  Test Cut Flow – Used when setting the plasma gas cut flow rate on the **N_2** or **O_2** flow meter for cutting conditions as specified in the *Cut Charts.* In this position the contactor is disabled.

  - **N_2** (FM1) or **O_2** (FM2) flow meter – In test cut flow, indicates the percentage of plasma gas flow, oxygen or nitrogen, required for cutting conditions.

  - **PLASMA Cut Flow** motor valve (MV1) (Activated by momentary switch) – Adjusts plasma gas test cut flow.

  Run – Enables the contactor and the subsequent firing of the arc after the gas flow rates have been set in the **Test Preflow** and **Test Cut Flow** positions and the **H_2O Injection** (torch water injection) as described below has been set.

- **H_2O Injection** flow meter (FM3) – Indicates the percentage of injection water flow as indicated in the *Cut Charts*.

- **H_2O Injection** metering valve (MV4) – Adjusts injection water flow as indicated in the *Cut Charts*.

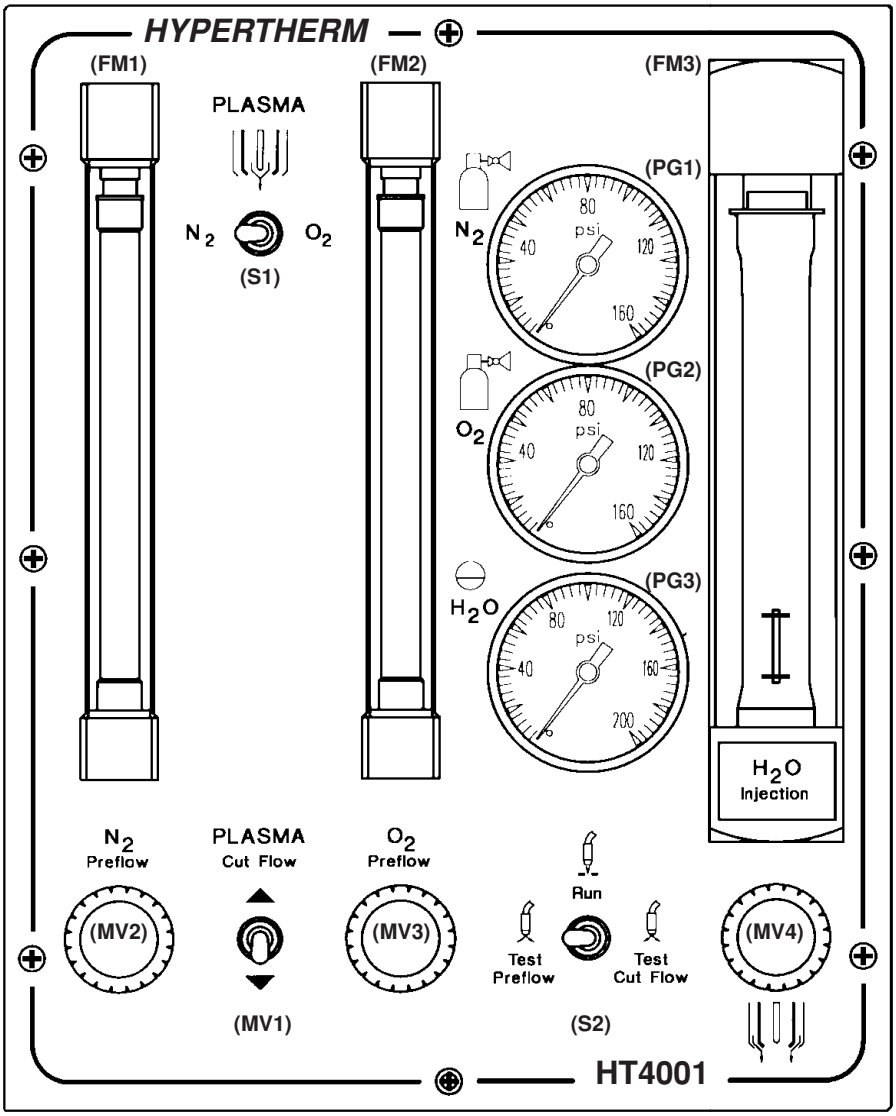

Figure 5-3 Gas Console Front Panel Controls and Indicators

Controls and Indicators (cont.)

Digital Remote (DR) V/C Module (Fig. 5-4)

- **VOLTAGE Adjust Pot**
  Adjusts the cutting arc voltage from 90 to 205 volts. Values are chosen from the *Cut Charts* and depend on the type of metal to cut, and metal thickness.

- **VOLTAGE LEDs**
  Displays cutting voltage.

- **CURRENT Adjust Pot**
  Adjusts the cutting arc current from 90 to 800 amps. Values are chosen from the *Cut Charts* and depend on the type of metal to cut, and metal thickness.

- **CURRENT LEDs**
  Displays cutting current.

- **UP / DOWN LEDs**
  Indicates that torch height is being adjusted up or down.

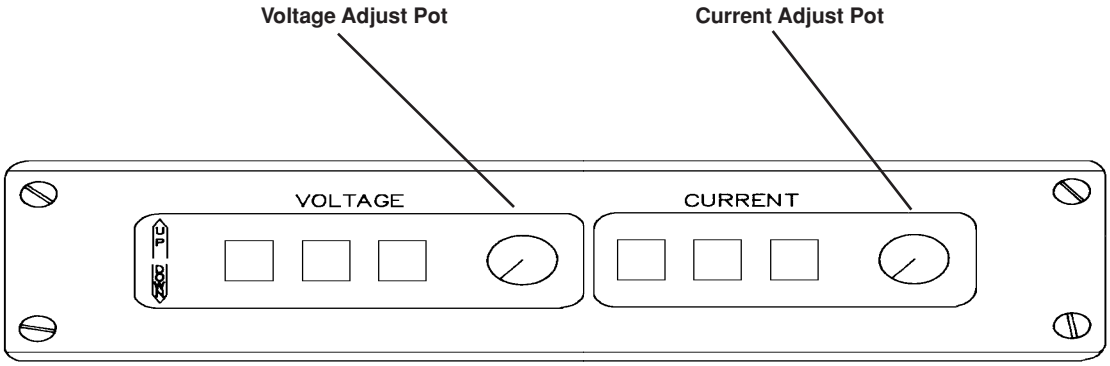

Figure 5-4 Digital Remote (DR) V/C Front Panel Controls and Indicators

Programmable Remote (PR) V/C Module (Fig. 5-5)

- **VOLTAGE LEDs**
  Displays cutting voltage during cut sequence.

- **CURRENT LEDs**
  Displays cutting current during cut sequence.

- **UP / DOWN LEDs**
  Indicates that torch height is being adjusted up or down.

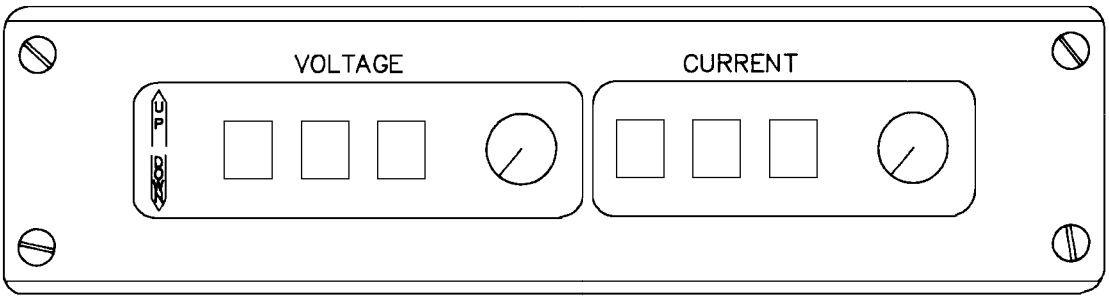

Figure 5-5 Programmable Remote (PR) V/C Front Panel Indicators

Timer/Counter (Fig. 5-6)

Each LCD counter is self-powered by a three-volt lithium battery.

- **STARTS** LCD Counter (w/Reset)
  Indicates the number of arc starts.

- **ARC TIME** LCD Counter
  Indicates the cumulative time that the arc is on in hours.

- **ERRORS** LCD Counter (w/Reset)
  Indicates the number of times that the arc cut cycle ends before the programmed current ramp down time has elapsed. This reading provides a direct correlation to the long-life operation of the electrode; the higher the reading, the shorter the electrode life.

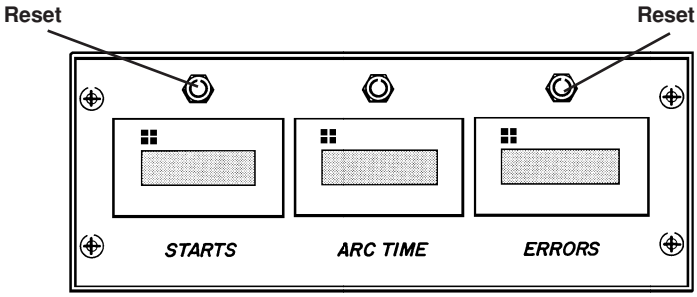

Figure 5-6 Timer / Counter Front Panel Indicators

Pre-Operation System Checkout

WARNING

Before operating this system, you must read the Safety section thoroughly! Wear proper clothing. Your cutting environment must meet requirements outlined in the Safety section. Turn main disconnect switches to the HT4001 power supply and water chiller OFF before proceeding.

The following procedure is for an HT4001 system with a water chiller, an IHS system with upper limit switch, and a Digital Remote (DR) V/C control module.

1. Set the main disconnect switches for the power supply and the water chiller to **OFF.**

2. Set the **S2** toggle switch on the gas console to **Run.**

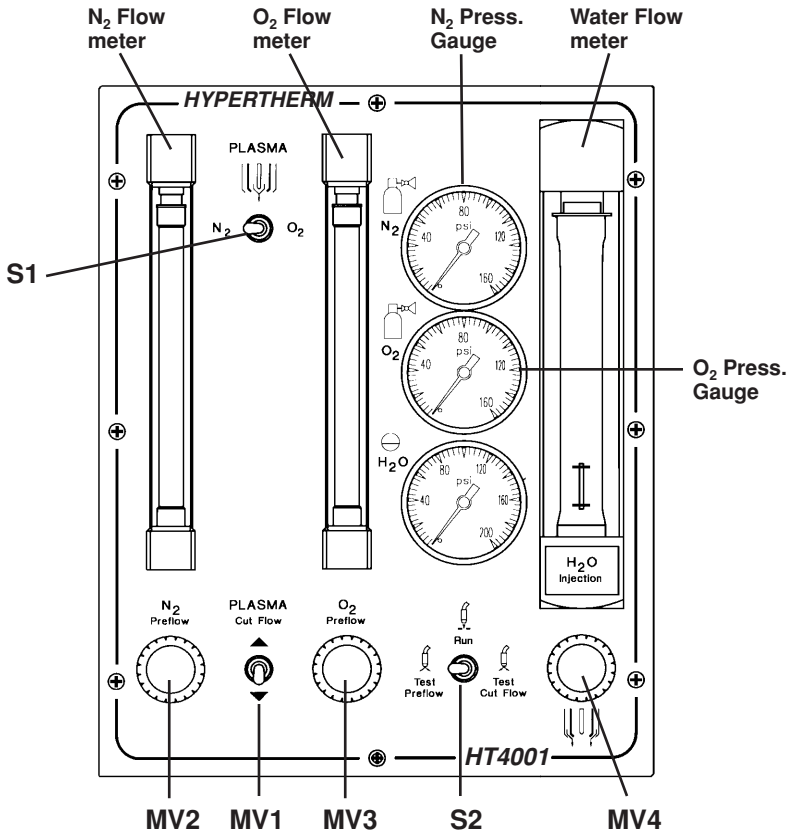

Figure 5-7 Gas Console Reference – Pre-Operation

3. Verify that the proper consumables are installed in the torch. Refer to the *Cut Charts* to choose the correct consumables for your cutting needs. See also *Changing Consumable Parts* later in this section.

4. Turn the required supply gas **ON.**

   Set the pressure on the **nitrogen** supply to read **150 psi +/- 10 psi (10.3 bar +/- 0.7 bar)** at the N_2 pressure gauge on the gas console.

   Set the pressure on the **oxygen** supply to read **120 psi +/- 10 psi (8.3 bar +/- 0.7 bar)** at the O_2 pressure gauge on the gas console.

5. Turn the water supply to the water chiller **ON**.

6. Set the main disconnect switch for the water chiller to the **ON** position and depress the **START** switch on the water chiller. Outlet water pressure should read between **175-185 psi (12-12.8 bar)** on the water chiller gauge. See IM241 Water Chiller Model D instruction manual for adjustment procedure, if necessary.

7. Set **S1** on the gas console to plasma gas N_2 or O_2.

8. Set the main disconnect switch for the power supply to **ON** and throw the **POWER** circuit breaker on the rear of the power supply to the UP position. Verify that the **POWER AC** indicator illuminates.

9. Set the **VOLTAGE** and **CURRENT** on the DR V/C module. Select the arc current and voltage from the *Cut Charts* for the type and thickness of metal to test cut.

   Notes:
   - If using the H-401 power supply as a slave and you need to reduce the existing arc current level, lower the current to below 360A on the remote V/C before resetting to the desired value.
   - If using the H-401 power supply as a slave, note that the current control adjust knob on the front of the H-401 supply will have no effect on setting current for the slave.

10. Set the **S2** toggle switch to **Test Preflow**. Set the preflow flow rate(s) on the O_2 and/or N_2 flow meters using the **MV2** and **MV3** metering valve. Select the test preflow rates from the *Cut Charts.*

11. Set **S2** to **Test Cut Flow.** Set the cut flow rate on the O_2 or N_2 flow meters using the **MV1** metering valve. Select the test cut flow rates from the *Cut Charts.*

12. Check the water flow rate at the water flow meter and adjust with **MV4,** if necessary. Water flow rates are specified in the *Cut Charts.*

13. Verify that there is a uniform conical water pattern at the front of the torch. If the pattern is irregular, shut the power supply down at the main disconnect switch and check the nozzle and swirl ring. Replace with new parts, if worn or damaged.

14. Set **S2** to **Run** after setting the preflow and cut flow rates.

15. Check the pilot arc operation by positioning the torch a **minimum of 3 inches (75 mm)** above the work.

16. Place the metal on the work table to make a test pierce. With manual starting, there is no machine motion.

    Note: The cutting machine must retract the torch at least one inch (25.4 mm) from the work before the start cycle, or probes may hit the workpiece when **START** button is depressed.

17. Set initial height to **ON**.

18. Depress the **START** button on your system. The probes will immediately descend and the torch will index toward the work approximately 0.5 seconds later. The **DOWN** indicator light on the V/C control should be on. When the torch nears the work, probes will inductively detect work surface and down motion will stop. The **DOWN** indicator light on the V/C module will go off and the probes will retract.

    At this point, set initial height to **OFF** and depress the **STOP** button. You are now ready for Final Torch Adjustment.

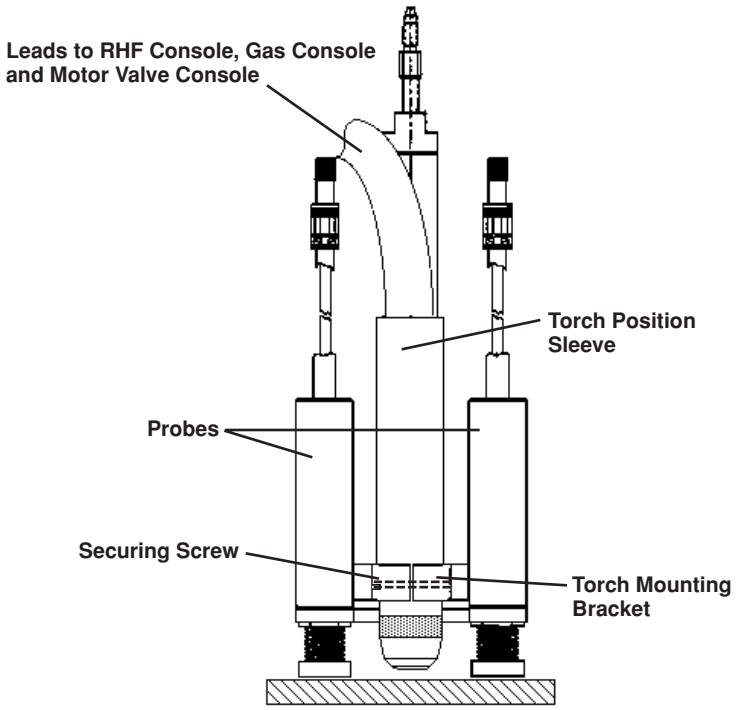

Figure 5-8 Torch with Inductive Probes

Final Torch Adjustment (Fig. 5-8)

- Look for the **Torch Standoff** distance on the *Cut Charts* for the thickness of material you are cutting.
- Loosen the **Securing Screw** on the torch mounting bracket and position the torch to twice the height specified under **Torch Standoff**. This is the initial torch height before piercing. (The torch will cut at the torch standoff distance after making the pierce.)
- Tighten the securing screw at this position.

Note: If not using the IHS, adjust the initial torch height in the standard mounting bracket to twice the torch standoff distance.

Note also: If arc does not transfer when set at twice the torch standoff (in the case of thick metal being cut at high current), gradually lower the initial height of the torch until transfer occurs.

19. Set the initial height to **ON** and press the **START** button on your system. Once the arc transfers and the machine delay time passes, the torch will pierce the metal. Press the **STOP** button to terminate the plasma arc. Verify that the **UP** indicator lights and the torch retracts to the upper limit switch.

20. Set the initial height to **OFF**.

21. Angle the workpiece on the work table (with one end higher than the other) to check the auto height (torch height control) mode. Position the torch at the highest point on the workpiece. Program a square cut pattern into the controller. (See controller instruction manual.)

22. Set the auto height to **ON**.

23. Manually lower the torch to approximately .25 inches (6 mm) above the workpiece.

24. Start the arc transfer from the controller.

25. When the arc transfers and the machine delay time passes, the arc will pierce the workpiece and machine motion will start. As the torch travels from a higher point to a lower point, verify that the torch stand-off distance from the workpiece remains constant, and the **DOWN** indicator lights on the DR V/C module.

    As the torch travels from a low point to a high point, verify that the torch stand-off distance from the workpiece remains constant, and the **UP** indicator lights on the DR V/C module.

    As the torch makes a corner cut, the machine motion speed should remain constant. The **UP** and **DOWN** indicators will not light while cornering. Machine motion and plasma arc will automatically stop when the cut is complete.

The system is now operational. Proceed to *Daily Startup*.

If the system does not function as outlined in this procedure, recheck the pre-installation requirements and installation directions in this manual. If all pre-installation and installation directives have been followed and you are still experiencing difficulty with the system, feel free to call Hypertherm's Field Service group at 1-800-643-9878.

Daily Start-Up

WARNING

Before operating this system, you must read the Safety section thoroughly! Wear proper clothing. Your cutting environment must meet requirements outlined in the Safety section. Turn main disconnect switches to the HT4001 power supply and water chiller OFF before proceeding.

1. Refer to the *Cut Charts* beginning on page 5-21 to choose the correct consumables for your cutting needs. Refer to *Changing Consumable Parts* later in this section for detailed information on the removal and replacement of consumables. Replace consumable parts, if needed.

2. Verify that the torch is squared to the material and adjusted to the proper height. Refer to *Torch Alignment* on page 4-38 for the torch alignment procedure. Refer to *Pre-Operation System Checkout* in this section to adjust the torch height.

3. Set **S2** on the gas console to **Run.**

4. Set the main disconnect switches for the power supply and the water chiller to **ON**.

5. Turn the supply gases **ON.**
   Set the pressure on the **nitrogen** supply to read **150 psi +/- 10 psi (10.3 bar +/- 0.7 bar)** at the N_2 pressure gauge on the gas console.

   Set the pressure on the **oxygen** supply to read **120 psi +/- 10 psi (8.3 bar +/- 0.7 bar)** at the O_2 pressure gauge on the gas console.

6. Turn the water supply to the water chiller **ON**.

7. Turn on the water chiller by depressing the **START** switch.

8. Set **S1** on the gas console to plasma gas N_2 or O_2.

9. Turn on the power supply by throwing the **POWER** circuit breaker on the rear of the power supply to the UP position.

10. Set the **VOLTAGE** from the Digital (DR) V/C module, or from the machine computer. Select the arc voltage from the *Cut Charts* for the type and thickness of metal to be cut.

Setting the Current

When setting the **CURRENT** from a low value to a higher value:
Set the desired value on the V/C module or CNC programmable current device.

When setting the **CURRENT** from a high value to a lower value:
With the V/C module, dial the current to 50 amps below the desired value, and then back up to the desired value.
When using a CNC programmable current device, set the current to the desired value and then restart the plasma system.

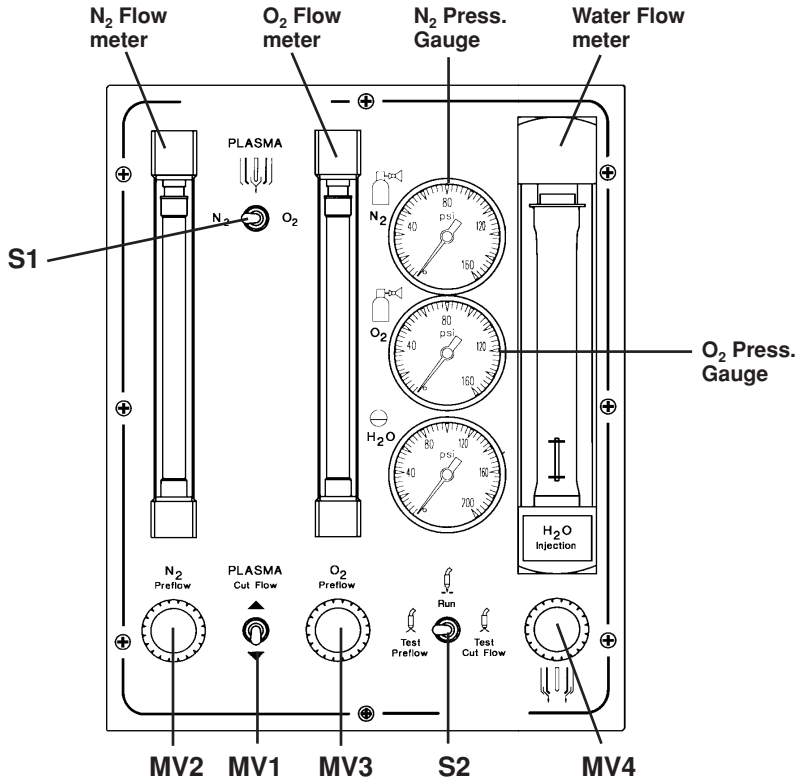

Figure 5-9 Gas Console Reference – Daily Startup

Note: If using the H-401 power supply as a slave, note that the current control adjust knob on the front panel of the H-401 will have no effect on setting current for the slave.

11. Set the **S2** toggle switch to **Test Preflow**. Set the preflow flow rate(s) on the O_2 and/or N_2 flow meters using the **MV2** and/or **MV3** metering valve(s). Select the test preflow rates from the *Cut Charts.*

    Note: If the power supply has been off for more than one hour, or if you have changed consumable parts or have changed gases, purge gas lines by leaving system in TEST PREFLOW for one minute.

12. Set **S2** to **Test Cut Flow**. Set the cut flow rate on the O_2 or N_2 flow meters using the **MV1** metering valve (momentary switch). Select the test cut flow rates from the *Cut Charts.*

    Note: If the power supply has been off for more than one hour, or if you have changed consumable parts or have changed gases, purge gas lines by leaving system in TEST PREFLOW for one minute.

13. Check the water flow rate at the water flow meter and adjust with **MV4** metering valve, if necessary. See the *Cut Charts* for water flow rates.

14. Verify that there is a uniform conical water pattern at the front of the torch. If the pattern is irregular, shut the power supply down at the main disconnect switch and check the nozzle and swirl ring. Replace with new parts, if worn or damaged.

15. Set **S2** to **Run**. The system is now ready for operation.

How to Optimize Cut Quality

The following tips and procedures will help produce square, straight, smooth and dross-free cuts.

Tips for Table and Torch

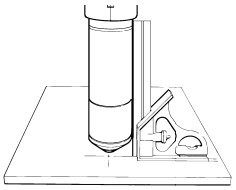

- Use a square to align the torch at right angles to the workpiece.
- The torch may travel more smoothly if you clean, check and “tune” the rails and drive system on the cutting table. Unsteady machine motion can cause a regular, wavy pattern on the cut surface.
- The torch must not touch the workpiece during cutting. Contact can damage the shield and nozzle, and affect the cut surface.

Plasma Set-Up Tips

Follow carefully each step in the *Daily Start-Up* procedure described earlier in this section.

Purge the gas lines before cutting.

Maximize the Life of Consumable Parts

Hypertherm’s LongLife® process automatically “ramps up” the gas and current flows at the start and ramps them down at the end of each cut, to minimize erosion of the electrode’s center surface. The LongLife process also requires that cuts start and stop on the workpiece.

- The torch should never fire into the air.
  - Starting the cut at the edge of the workpiece is acceptable, as long as the arc is not fired in the air.
  - To start with a pierce, use a pierce height that is 1.5 to 2 times the torch-to-work distance. See Cut Charts.
- Each cut should end with the arc still attached to the workpiece, to avoid arc blow-outs (ramp-down errors).
  - When cutting drop parts (small parts that drop down after being cut from the workpiece), check that the arc stays attached to the edge of the workpiece, for proper ramp-down.
- If arc blow-outs occur, try one or more of the following:
  - Reduce the cutting speed during the final part of the cut.
  - Stop the arc before the part is completely cut, to allow completion of the cut during the ramp-down.
  - Program the path of the torch into the scrap area for ramp-down.

    Note: Use a “chain cut” if possible, so the path of the torch can lead directly from one cut part into the next, without stopping and starting the arc. However, do not allow the path to lead off the workpiece and back on, and remember that a chain cut of long duration will cause electrode wear.

    Note: It may be difficult to achieve the full benefits of the LongLife process in some conditions.

Additional Factors of Cut Quality

Cut Angle

A cut part whose 4 sides average less than 4° of cut angle is considered acceptable.

Note: The squarest cut angle will be on the right side with respect to the forward motion of the torch.

Note: To determine whether a cut-angle problem is being caused by the plasma system or the drive system, make a test cut and measure the angle of each side. Next, rotate the torch 90° in its holder and repeat the process. If the angles are the same in both tests, the problem is in the drive system.

If a cut-angle problem persists after “mechanical causes” have been eliminated (See *Tips for Table and Torch,* previous page), check the torch-to-work distance, especially if cut angles are all positive or all negative.

- A positive cut angle results when more material is removed from the top of the cut than from the bottom.
- A negative cut angle results when more material is removed from the bottom of the cut.

Dross

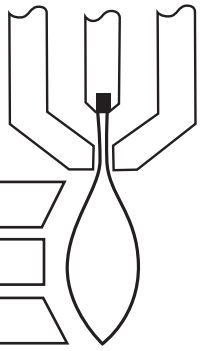

Problem	Cause	Solution
Negative cut angle	The torch is too low.	Increase arc voltage to raise the torch.
Square cut		
Positive cut angle	The torch is too high.	Decrease arc voltage to lower the torch.

Low-speed dross forms when the torch’s cutting speed is too slow and the arc shoots ahead. It forms as a heavy, bubbly deposit at the bottom of the cut and can be removed easily. Increase the speed to reduce the dross.

High-speed dross forms when the cutting speed is too fast and the arc lags behind. It forms as a thin, linear bead of solid metal attached very close to the cut. It is welded to the bottom of the cut and is difficult to remove. To reduce high-speed dross:

- Decrease the cutting speed.
- Decrease arc voltage, to decrease the torch-to-work distance.
- Increase O_2 in the shield gas to increase the range of dross-free cutting speeds. (Only HyDefinition and HT4400 systems can accommodate mixed-gas shield gases.)

Notes: Dross is more likely to form on warm or hot metal than on cool metal. For example, the first cut in a series of cuts will likely produce the least dross. As the workpiece heats up, more dross may form on subsequent cuts.

Dross is more likely to form on mild steel than on stainless steel or aluminum.

Worn or damaged consumables may produce intermittent dross.

Straightness of the Cut Surface

A typical plasma cut surface is slightly concave.

The cut surface may become more concave, or convex. Correct torch height is required to keep the cut surface acceptably close to straight.

A strongly concave cut surface occurs when the torch-to-work distance is too low. Increase the arc voltage to increase the torch-to-work distance and straighten the cut surface.

A convex cut surface occurs when the torch-to-work distance is too great or the cutting current is too high. First, reduce the arc voltage, then reduce the cutting current. If there is overlap between different cutting currents for that thickness, try the consumables designed for the lower current.

Additional Improvements

Some of these improvements involve trade-offs, as described.

Smoothness of Cut Surface (Surface Finish)

- (HyDefinition and HT4400 only) On mild steel, a higher concentration of N_2 in the O_2-N_2 shield mixture may produce a smoother cut surface.
  Trade-off: This may produce more dross.

- (HyDefinition and HT4400 only) On mild steel, a higher concentration of O_2 in the O_2-N_2 shield mixture may increase the cutting speed and produce less dross.
  Trade-off: This may produce a rougher cut surface.

Piercing

- The pierce delay must be sufficiently long that the arc can pierce the material before the torch moves, but not so long that the arc “wanders” while trying to find the edge of a large hole.

- A higher shield gas preflow may help blow the molten metal away during piercing.
  Trade-off: This may reduce starting reliability.

  Note: When piercing at maximum thicknesses, the ring of dross that forms during the pierce may be high enough to contact the torch when the torch begins to move after the pierce is complete. A “flying pierce,” which makes the pierce while the torch is moving, may eliminate the torch vibration that follows contact between the torch and the ring of dross.

How to Increase Cutting Speed

- Decrease the torch-to-work distance.
  Trade-off: This will increase the negative cut angle

  Note: The torch must not touch the workpiece while piercing or cutting.

Common Cutting Faults

- Torch pilot arc will initiate, but will not transfer. Causes can be:

  1. Work cable connection on cutting table not making good contact.

  2. Malfunction in HT4001 system. See *Troubleshooting* in **Maintenance** section.

- Workpiece is not totally penetrated, and there is excessive sparking on top of the workpiece. Causes can be:

  1. Current is set too low (check *Cut Chart* information).

  2. Cut speed is too high (check *Cut Chart* information).

  3. Torch parts are worn (see *Changing Consumable Parts*).

  4. Metal being cut is too thick.

- Dross forms on the bottom of the cut – See Dross on page 5-16.
- Cut angle not square – See How to Optimize Cut Quality on page 5-15.
- Short consumable life – See Maximize the Life of Consumable Parts on page 5-15.

Technical Questions

Claims for defective merchandise -- All units shipped from Hypertherm undergo rigorous quality control testing. However, if your system does not function correctly:

1. Re-check all pre-installation and installation requirements and connections.

2. If you are unable to solve the problem, call your distributor. He/she will be able to help you, or refer you to an authorized Hypertherm repair facility.

3. If you need additional assistance, call Customer Service at 1-800-643-0030 or Technical Service at 1-800-643-9878.

Cut Charts

The Cut Charts on the following pages are optimized to provide the best cut angle, least dross and best cut surface finish. Keep in mind that the charts provide a good starting point and that optimum cutting must be tuned to the application and materials on site. Increasing cut speed, lowering the torch standoff, for example, all present certain trade-offs as mentioned in *How to Get Better Cut Quality*. Depending on the cutting application, it is up to the operator to determine if the trade-offs are acceptable.

Before cutting, check all settings and adjustments and check for damaged torch parts and worn consumable parts.

WARNING

CE countries must operate the PAC620 machine torch using a special CE retaining cap in order to comply with CE regulations. Cap removal tool (004732) must be used to put on and remove the retaining caps. Part numbers for the CE retaining caps are indicated in the cut charts.

HT4001 without Slave – Cut Chart and Consumable Parts Index

Consum. Type	Metal	Amps	Plasma Gas	Retaining Cap	Nozzle	Swirl Ring	Electrode	Page
*STANDARD	Mild Steel	260	Oxygen	020579	020086	020623	020663	5-21
		340	Oxygen	020579	020086	120135	120630	5-21
		260	Nitrogen	020579	020089	020039	020082	5-22
		400	Nitrogen	020579	020084	020039	020082	5-22
	Stainless	260	Nitrogen	020579	020089	020039	020082	5-23
		400	Nitrogen	020579	020084	020039	020082	5-23
	Aluminum	260	Nitrogen	020579	020089	020039	020082	5-24
		400	Nitrogen	020579	020084	020039	020082	5-24
**BEVEL	Mild Steel	260	Oxygen	120390	120384	020623	020975	5-25
		340	Oxygen	120390	120384	120460	120836	5-26
	Mild / Stainless	260	Nitrogen	120390	120386	020039	020968	5-27
		400	Nitrogen	120390	120387	020039	020968	5-27
	Aluminum	260	Nitrogen	120390	120386	020039	020968	5-28
		400	Nitrogen	120390	120387	020039	020968	5-28

HT4001 with Slave – Cut Chart and Consumable Parts Index

Consum. Type	Metal	Amps	Plasma Gas	Retaining Cap	Nozzle	Swirl Ring	Electrode	Page
*STANDARD	Mild / Stainless	260	Nitrogen	020580	020281	020039	020285	5-29
		400	Nitrogen	020580	020282	020039	020285	5-29
		600	Nitrogen	020580	020283	020039	020285	5-29
		760	Nitrogen	020580	020284	020040	020285	5-29
	Aluminum	260	Nitrogen	020580	020281	020039	020285	5-30
		400	Nitrogen	020580	020282	020039	020285	5-30
		600	Nitrogen	020580	020283	020039	020285	5-30
		760	Nitrogen	020580	020284	020040	020285	5-30
**BEVEL	Mild / Stainless	260	Nitrogen	120390	120386	020039	020968	5-31
		400	Nitrogen	120390	120387	020039	020968	5-31
		600	Nitrogen	120390	120388	020039	020968	5-31
		760	Nitrogen	120390	120389	020040	020968	5-31
	Aluminum	260	Nitrogen	120390	120386	020039	020968	5-32
		400	Nitrogen	120390	120387	020039	020968	5-32
		600	Nitrogen	120390	120388	020039	020968	5-32
		760	Nitrogen	120390	120389	020040	020968	5-32

* Use standard consumables with the PAC620 if the torch will only be making cuts 90° to the work surface.
** Use bevel consumables with the PAC620 if the torch will be making cuts between 45° and 90° to the work surface.

HT4001 without Slave

PAC620 Torch – Standard Consumables

Mild Steel – Oxygen Plasma

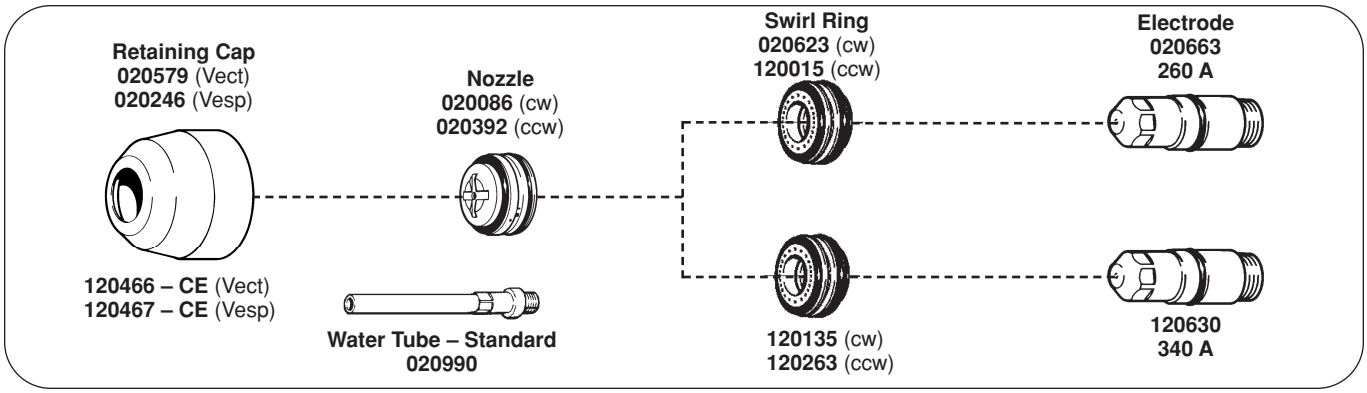

ENGLISH

Electrode	Material Thickness (in)	Material Thickness (mm)	Test Preflow Rate (N_2) (%)	Test Preflow Rate (O_2) (%)	Test Cut Flow Rate (O_2) (%)	Water Flow Setting (%)	Arc Volts (V)	Arc Current (A)	Torch Standoff (in)	Torch Standoff (mm)	Travel Speed (ipm)	Travel Speed (mm/min)
260A	1/4	6.35	16	11	80	60	120	260	1/8	3	170	4320
	1/2	12.7	16	11	80	60	130	260	3/16	5	100	2540
	3/4	19.1	16	11	80	60	135	260	3/16	5	70	1780
	1	25.4	16	11	80	60	140	260	3/16	5	50	1270
340A	1/2	12.7	16	11	80	60	130	340	1/8	3	110	2800
	3/4	19.1	16	11	80	60	140	340	3/16	5	85	2160
	7/8	22.2	16	11	80	60	145	340	3/16	5	75	1900
	1	25.4	16	11	80	60	145	340	3/16	5	65	1650
	1-1/4	31.8	16	11	80	60	145	340	3/16	5	45	1140

METRIC

Electrode	Material Thickness (mm)	Test Preflow Rate (N_2) (%)	Test Preflow Rate (O_2) (%)	Test Cut Flow Rate (O_2) (%)	Water Flow Setting (%)	Arc Volts (V)	Arc Current (A)	Torch Standoff (mm)	Travel Speed (mm/min)
260A	8	16	11	80	60	125	260	3-4	3850
	10	16	11	80	60	130	260	4	3300
	12	16	11	80	60	130	260	4-5	2730
	15	16	11	80	60	135	260	5	2260
	20	16	11	80	60	135	260	5	1700
	25	16	11	80	60	140	260	5	1300
340A	15	16	11	80	60	135	340	5	2570
	20	16	11	80	60	140	340	5	2080
	25	16	11	80	60	145	340	5	1680
	30	16	11	80	60	145	340	5	1280

Notes: Minimum O_2 inlet pressures remain at one setting of 120 psi (8.2 bar) for all material thickness.
Minimum N_2 inlet pressures remain at one setting of 150 psi (10.3 bar) for all material thickness.
O_2 flow rate at full scale is 127 scfh (60 l/min) @ 120 psi (8.2 bar) inlet pressure.
N_2 flow rate at full scale is 374 scfh (176 l/min) @ 150 psi (10.3 bar) inlet pressure.
Water chiller pump outlet pressure remains between 175-185 psi (12-12.8 bar) for all material thickness.
Set initial torch height (before piercing) to approximately twice the Torch Standoff distance for the material you are cutting.

HT4001 without Slave

PAC620 Torch – Standard Consumables

Mild Steel – Nitrogen Plasma

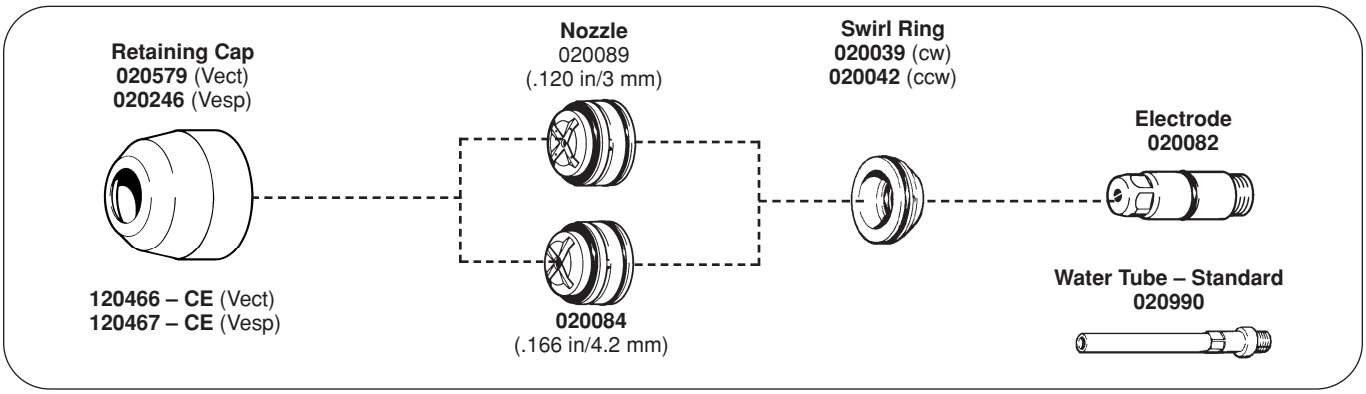

ENGLISH

Nozzle	Material Thickness (in)	Material Thickness (mm)	Test Preflow Rate (N_2) (%)	Test Cut Flow Rate (N_2) (%)	Water Flow Setting (%)	Arc Volts (V)	Arc Current (A)	Torch Standoff (in)	Torch Standoff (mm)	Travel Speed (ipm)	Travel Speed (mm/min)
.120" 260A max.	.035	.889	30	30	45	125	260	1/8	3	450	11430
	.075	1.91	30	30	45	130	260	1/8	3	300	7620
	1/8	3.18	30	30	45	135	260	1/4	6	200	5080
	1/4	6.35	30	30	45	145	260	5/16	8	145	3690
.166" 400A max.	1/8	3.18	45	45	62	140	300	1/4	6	175	4450
	1/4	6.35	45	45	62	140	360	1/4	6	145	3690
	3/8	9.53	45	45	62	145	360	1/4	6	125	3180
	1/2	12.7	45	45	62	150	400	1/4	6	95	2420
	3/4	19.1	45	45	62	150	400	5/16	8	50	1270
	1	25.4	45	45	62	155	400	3/8	10	30	760

METRIC

Nozzle	Material Thickness (mm)	Test Preflow Rate (N_2) (%)	Test Cut Flow Rate (N_2) (%)	Water Flow Setting (%)	Arc Volts (V)	Arc Current (A)	Torch Standoff (mm)	Travel Speed (mm/min)
3 mm 260A max.	6	30	30	45	145	260	8	3840
4.2 mm 400A max.	6	45	45	62	140	360	6	4660
	8	45	45	62	145	360	6	3420
	10	45	45	62	145	360	6	3060
	12	45	45	62	150	400	6	2580
	15	45	45	62	150	400	6-7	2000
	20	45	45	62	150	400	8	1190
	25	45	45	62	155	400	10	790

Notes:
- Minimum N_2 inlet supply pressure remains at one setting of 150 psi (10.3 bar) for all material thickness.
- Water chiller pump outlet pressure remains between 175-185 psi (12-12.8 bar) for all material thickness.
- N_2 flow rate at full scale is 374 scfh (176 l/min) @ 150 psi (10.3 bar) inlet pressure.
- Set initial torch height (before piercing) to approximately twice the Torch Standoff distance for the material you are cutting.
  Note: If arc does not transfer when set at twice the torch standoff (in the case of thick metal being cut at high current), gradually lower the initial height of the torch until transfer occurs.

HT4001 without Slave

PAC620 Torch – Standard Consumables

Stainless Steel – Nitrogen Plasma

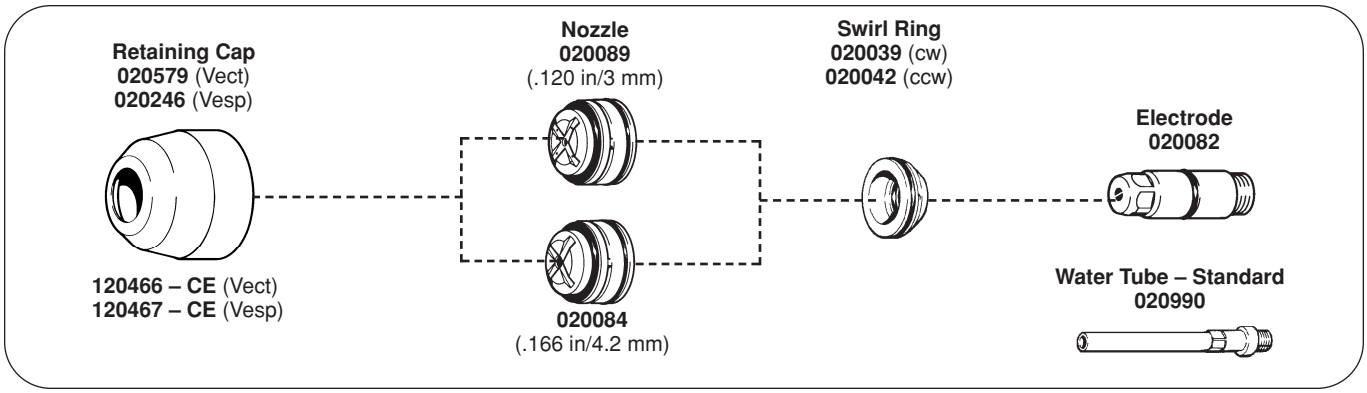

ENGLISH

Nozzle	Material Thickness (in)	Material Thickness (mm)	Test Preflow Rate (N_2) (%)	Test Cut Flow Rate (N_2) (%)	Water Flow Setting (%)	Arc Volts (V)	Arc Current (A)	Torch Standoff (in)	Torch Standoff (mm)	Travel Speed (ipm)	Travel Speed (mm/min)
.120" 260A max.	.035	.889	30	30	45	125	260	1/8	3	450	11430
	.075	1.91	30	30	45	130	260	1/8	3	300	7620
	1/8	3.18	30	30	45	135	260	1/8	3	200	5080
	1/4	6.35	30	30	45	145	260	1/8	3	150	3810
.166" 400A max.	3/8	9.53	45	45	62	150	380	3/16	5	125	3170
	1/2	12.7	45	45	62	155	400	3/16	5	100	2540
	3/4	19.1	45	45	62	160	400	3/16	5	50	1270
	1	25.4	45	45	62	165	400	1/4	6	30	760
	1-1/2	38.1	45	45	62	185	400	1/4	6	20	510
	2	50.8	45	45	62	200	400	1/4	6	12	300

METRIC

Nozzle	Material Thickness (mm)	Test Preflow Rate (N_2) (%)	Test Cut Flow Rate (N_2) (%)	Water Flow Setting (%)	Arc Volts (V)	Arc Current (A)	Torch Standoff (mm)	Travel Speed (mm/min)
3 mm 260A max.	6	30	30	45	145	260	3	3950
4.2 mm 400A max.	10	45	45	62	150	380	5	3070
	12	45	45	62	155	400	5	2680
	15	45	45	62	160	400	5	2080
	20	45	45	62	160	400	5-6	1200
	25	45	45	62	165	400	6	790
	35	45	45	62	180	400	6	570
	50	45	45	62	200	400	6	310

Notes:
- Minimum N_2 inlet supply pressure remains at one setting of 150 psi (10.3 bar) for all material thickness.
- Water chiller pump outlet pressure remains between 175-185 psi (12-12.8 bar) for all material thickness.
- N_2 flow rate at full scale is 374 scfh (176 l/min) @ 150 psi (10.3 bar) inlet pressure.
- Set initial torch height (before piercing) to approximately twice the Torch Standoff distance for the material you are cutting.
  Note: If arc does not transfer when set at twice the torch standoff (in the case of thick metal being cut at high current), gradually lower the initial height of the torch until transfer occurs.

HT4001 without Slave

PAC620 Torch – Standard Consumables

Aluminum – Nitrogen Plasma

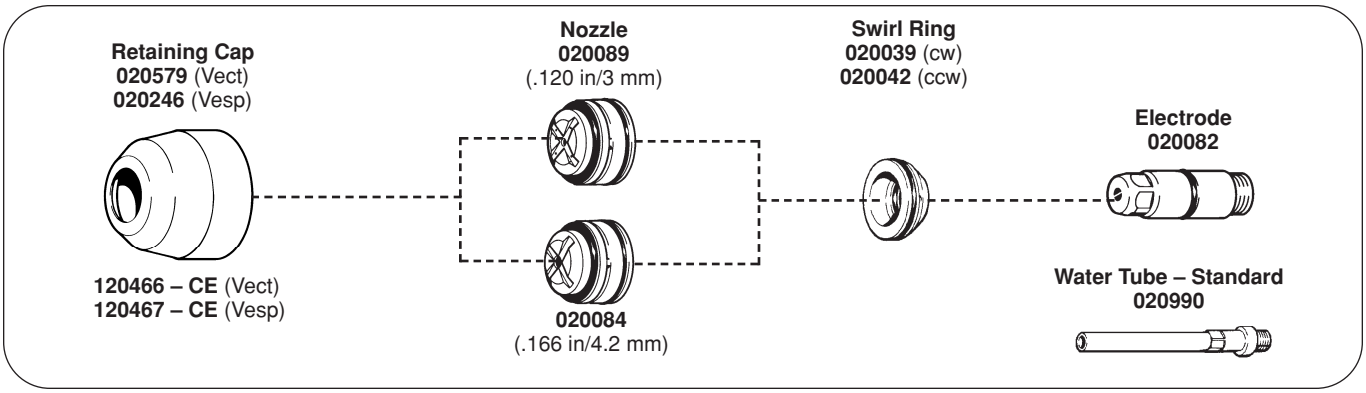

ENGLISH

Nozzle	Material Thickness (in)	Material Thickness (mm)	Test Preflow Rate (N_2) (%)	Test Cut Flow Rate (N_2) (%)	Water Flow Setting (%)	Arc Volts (V)	Arc Current (A)	Torch Standoff (in)	Torch Standoff (mm)	Travel Speed (ipm)	Travel Speed (mm/min)
.120" 260A max.	.035	.889	30	30	45	125	260	1/8	3	540	13700
	.075	1.91	30	30	45	130	260	1/8	3	360	9140
	1/8	3.18	30	30	45	135	260	1/8	3	240	6100
	1/4	6.35	30	30	45	145	260	1/8	3	180	4570
.166" 400A max.	3/8	9.53	45	45	62	150	360	3/16	5	150	3800
	1/2	12.7	45	45	62	155	380	3/16	5	120	3050
	3/4	19.1	45	45	62	160	400	3/16	5	60	1520
	1	25.4	45	45	62	165	400	1/4	6	35	900
	1-1/2	38.1	45	45	62	190	400	1/4	6	30	760
	2	50.8	45	45	62	200	400	1/4	6	15	380

METRIC

Nozzle	Material Thickness (mm)	Test Preflow Rate (N_2) (%)	Test Cut Flow Rate (N_2) (%)	Water Flow Setting (%)	Arc Volts (V)	Arc Current (A)	Torch Standoff (mm)	Travel Speed (mm/min)
3 mm 260A max.	6	30	30	45	145	260	3	4730
4.2 mm 400A max.	10	45	45	62	150	360	5	3700
	12	45	45	62	155	380	5	3200
	15	45	45	62	160	400	5	2500
	20	45	45	62	160	400	5-6	1420
	25	45	45	62	165	400	6	940
	35	45	45	62	190	400	6	790
	50	45	45	62	200	400	6	400

Notes:
- Minimum N_2 inlet supply pressure remains at one setting of 150 psi (10.3 bar) for all material thickness.
- Water chiller pump outlet pressure remains between 175-185 psi (12-12.8 bar) for all material thickness.
- N_2 flow rate at full scale is 374 scfh (176 l/min) @ 150 psi (10.3 bar) inlet pressure.
- Set initial torch height (before piercing) to approximately twice the Torch Standoff distance for the material you are cutting.
  Note: If arc does not transfer when set at twice the torch standoff (in the case of thick metal being cut at high current), gradually lower the initial height of the torch until transfer occurs.

HT4001 without Slave

PAC620 Torch – Standard Consumables

Mild Steel – Oxygen Plasma

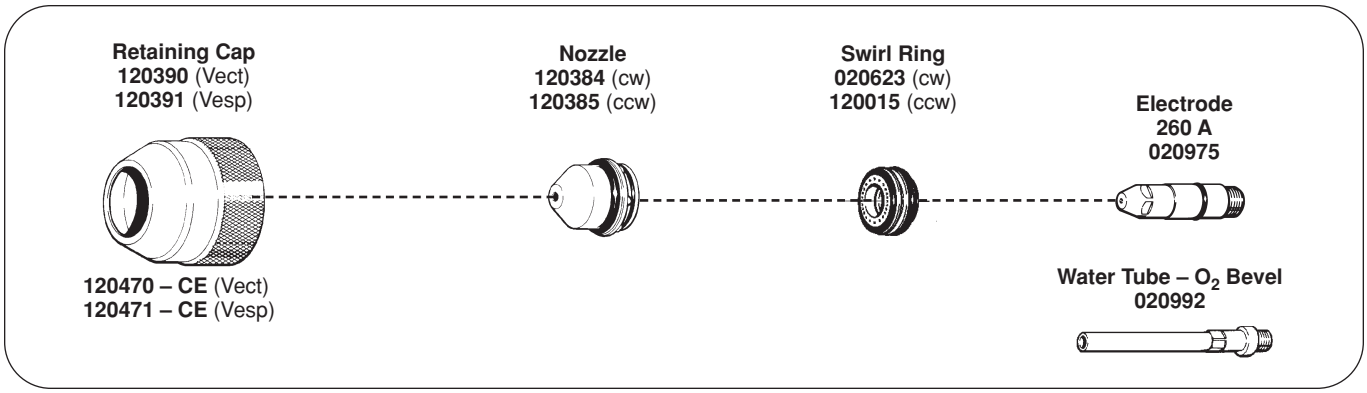

ENGLISH

Electrode	Material Thickness (in)	Material Thickness (mm)	Test Preflow Rate (N_2) (%)	Test Preflow Rate (O_2) (%)	Test Cut Flow Rate (O_2) (%)	Water Flow Setting (%)	Arc Volts (V)	Arc Current (A)	Torch Standoff (in)	Torch Standoff (mm)	Travel Speed (ipm)	Travel Speed (mm/min)
260A	1/4	6.35	16	11	85-90	73	120	260	1/8	3	165	4190
	1/2	12.7	16	11	85-90	73	125	260	1/8	3	100	2540
	3/4	19.1	16	11	85-90	73	135	260	3/16	5	65	1650
	1	25.4	16	11	85-90	73	140	260	1/4	6	45	1140

METRIC

Electrode	Material Thickness (mm)	Test Preflow Rate (N_2) (%)	Test Preflow Rate (O_2) (%)	Test Cut Flow Rate (O_2) (%)	Water Flow Setting (%)	Arc Volts (V)	Arc Current (A)	Torch Standoff (mm)	Travel Speed (mm/min)
260A	6	16	11	85-90	73	122	260	3	4200
	8	16	11	85-90	73	124	260	3-4	3600
	10	16	11	85-90	73	127	260	4	3000
	12	16	11	85-90	73	130	260	4-5	2500
	15	16	11	85-90	73	132	260	5	2100
	20	16	11	85-90	73	136	260	5-6	1500
	25	16	11	85-90	73	141	260	5	1100

Notes: Minimum O_2 inlet pressure remains at one setting of 120 psi (8.2 bar) for all material thickness.
Minimum N_2 inlet pressure remains at one setting of 150 psi (10.3 bar) for all material thickness.
O_2 flow rate at full scale is 127 scfh (60 l/min) @ 120 psi (8.2 bar) inlet pressure.
N_2 flow rate at full scale is 374 scfh (176 l/min) @ 150 psi (10.3 bar) inlet pressure.
Water chiller pump outlet pressure remains between 175-185 psi (12-12.8 bar) for all material thickness.
Set initial torch height (before piercing) to approximately twice the Torch Standoff distance for the material you are cutting.

HT4001 without Slave

PAC620 Torch – Beveling Consumables

Mild Steel – Oxygen Plasma

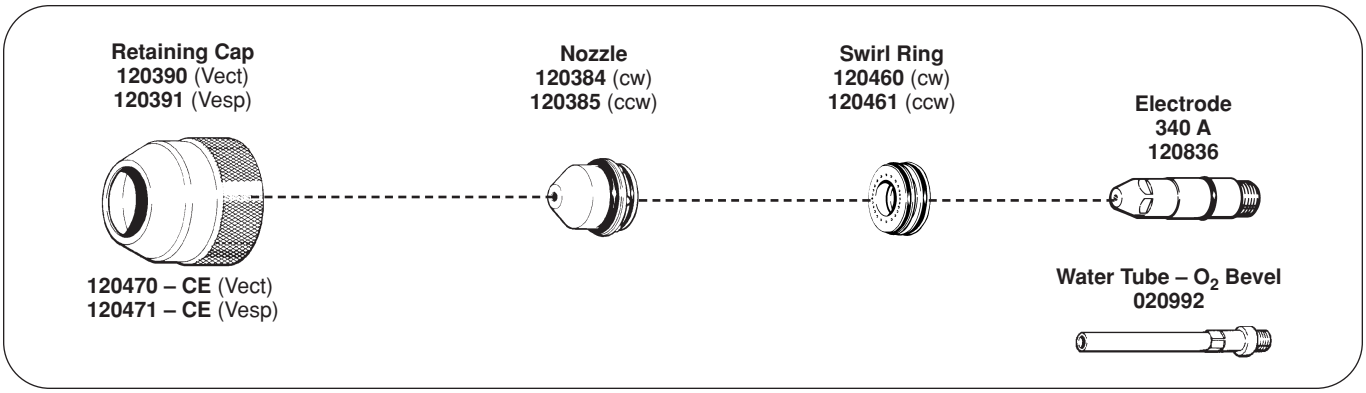

ENGLISH

Electrode	Material Thickness (in)	Material Thickness (mm)	Test Preflow Rate (N_2) (%)	Test Preflow Rate (O_2) (%)	Test Cut Flow Rate (O_2) (%)	Water Flow Setting (%)	Arc Volts (V)	Arc Current (A)	Torch Standoff (in)	Torch Standoff (mm)	Travel Speed (ipm)	Travel Speed (mm/min)
340A	1/2	12.7	16	11	85	73	135	340	3/16	5	110	2800
	3/4	19.1	16	11	85	73	140	340	3/16	5	85	2160
	1	25.4	16	11	85	73	145	340	3/16	5	65	1650
	1-1/4	31.8	16	11	85	73	145	340	3/16	5	45	1140

METRIC

Electrode	Material Thickness (mm)	Test Preflow Rate (N_2) (%)	Test Preflow Rate (O_2) (%)	Test Cut Flow Rate (O_2) (%)	Water Flow Setting (%)	Arc Volts (V)	Arc Current (A)	Torch Standoff (mm)	Travel Speed (mm/min)
340A	15	16	11	85	73	135	340	5	2570
	20	16	11	85	73	140	340	5	2080
	25	16	11	85	73	145	340	5	1680
	30	16	11	85	73	145	340	5	1280

Notes: Minimum O_2 inlet pressure remains at one setting of 120 psi (8.2 bar) for all material thickness.
Minimum N_2 inlet pressure remains at one setting of 150 psi (10.3 bar) for all material thickness.
O_2 flow rate at full scale is 127 scfh (60 l/min) @ 120 psi (8.2 bar) inlet pressure.
N_2 flow rate at full scale is 374 scfh (176 l/min) @ 150 psi (10.3 bar) inlet pressure.
Water chiller pump outlet pressure remains between 175-185 psi (12-12.8 bar) for all material thickness.
Set initial torch height (before piercing) to approximately twice the Torch Standoff distance for the material you are cutting.

HT4001 without Slave

PAC620 Torch – Beveling Consumables

Mild Steel or Stainless Steel – Nitrogen Plasma

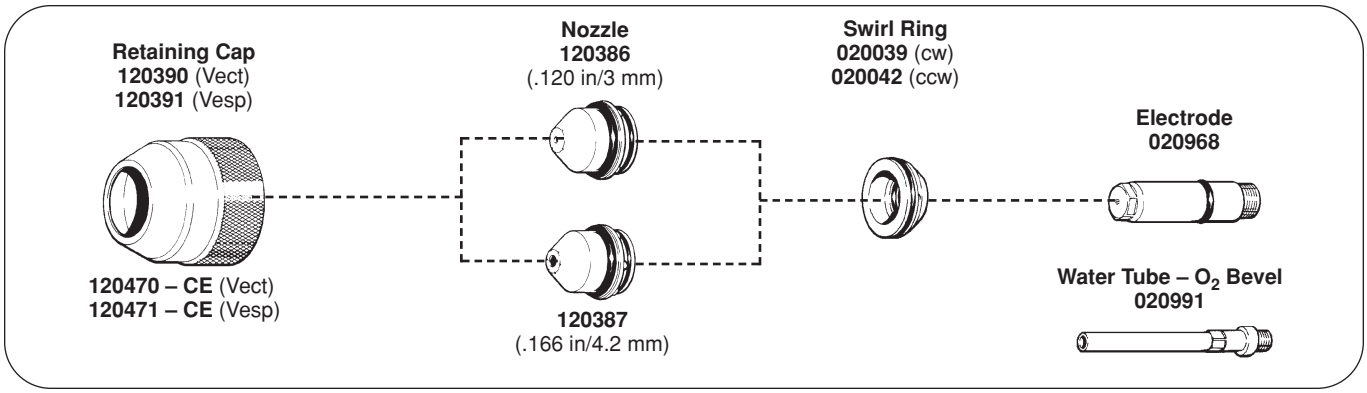

ENGLISH

Nozzle	Material Thickness (in)	Material Thickness (mm)	Test Preflow Rate (N_2) (%)	Test Cut Flow Rate (N_2) (%)	Water Flow Setting (%)	Arc Volts (V)	Arc Current (A)	Torch Standoff (in)	Torch Standoff (mm)	Travel Speed (ipm)	Travel Speed (mm/min)
.120" 260A max.	.035	.889	30	30	45	125	240	1/8	3	425	10800
	.075	1.91	30	30	45	130	240	1/8	3	285	7240
	1/8	3.18	30	30	45	145	240	3/16	5	190	4830
	1/4	6.35	30	30	45	155	240	3/16	5	145	3680
.166" 400A max.	1/8	3.18	45	45	62	125	300	1/4	6	170	4320
	1/4	6.35	45	45	62	135	340	1/4	6	140	3560
	3/8	9.53	45	45	62	145	360	1/4	6	120	3050
	1/2	12.7	45	45	62	145	380	5/16	8	90	2290
	3/4	19.1	45	45	62	150	400	5/16	8	50	1270
	1	25.4	45	45	62	155	400	3/8	10	30	760

METRIC

Nozzle	Material Thickness (mm)	Test Preflow Rate (N_2) (%)	Test Cut Flow Rate (N_2) (%)	Water Flow Setting (%)	Arc Volts (V)	Arc Current (A)	Torch Standoff (mm)	Travel Speed (mm/min)
3 mm 260A max.	6	30	30	45	155	240	5	3800
4.2 mm 400A max.	6	45	45	62	135	340	6	3640
	8	45	45	62	140	360	6	3300
	10	45	45	62	145	360	6	2930
	12	45	45	62	145	380	6-7	2450
	15	45	45	62	150	400	8	1900
	20	45	45	62	150	400	8	1200
	25	45	45	62	155	400	10	790

Notes:
- Minimum N_2 inlet supply pressure remains at one setting of 150 psi (10.3 bar) for all material thickness.
- Water chiller pump outlet pressure remains between 175-185 psi (12-12.8 bar) for all material thickness.
- N_2 flow rate at full scale is 374 scfh (176 l/min) @ 150 psi (10.3 bar) inlet pressure.
- Set initial torch height (before piercing) to approximately twice the Torch Standoff distance for the material you are cutting.
  Note: If arc does not transfer when set at twice the torch standoff (in the case of thick metal being cut at high current), gradually lower the initial height of the torch until transfer occurs.

HT4001 without Slave

PAC620 Torch – Beveling Consumables

Aluminium – Nitrogen Plasma

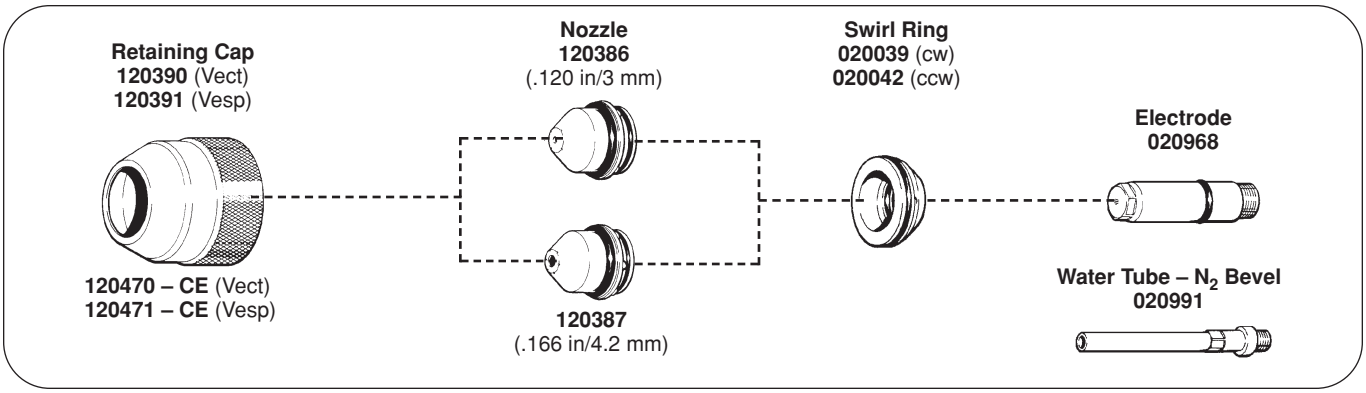

ENGLISH

Nozzle	Material Thickness (in)	Material Thickness (mm)	Test Preflow Rate (N_2) (%)	Test Cut Flow Rate (N_2) (%)	Water Flow Setting (%)	Arc Volts (V)	Arc Current (A)	Torch Standoff (in)	Torch Standoff (mm)	Travel Speed (ipm)	Travel Speed (mm/min)
.120" 260A max.	.035	.889	30	30	45	120	240	1/8	3	520	13200
	.075	1.91	30	30	45	125	240	1/8	3	345	8760
	1/8	3.18	30	30	45	130	260	3/16	5	230	5840
	1/4	6.35	30	30	45	140	260	1/4	6	170	4320
.166" 400A max.	1/8	3.18	55	55	62	140	280	1/4	6	220	5590
	1/4	6.35	55	55	62	150	320	1/4	6	165	4190
	3/8	9.53	55	55	62	150	340	1/4	6	130	3300
	1/2	12.7	55	55	62	150	360	1/4	8	110	2800
	3/4	19.1	55	55	62	150	380	5/16	8	60	1520
	1	25.4	55	55	62	165	380	3/8	10	35	890

METRIC

Nozzle	Material Thickness (mm)	Test Preflow Rate (N_2) (%)	Test Cut Flow Rate (N_2) (%)	Water Flow Setting (%)	Arc Volts (V)	Arc Current (A)	Torch Standoff (mm)	Travel Speed (mm/min)
3 mm 260A max.	6	30	30	45	140	260	6	4500
4.2 mm 400A max.	6	55	55	62	150	320	6	4340
	8	55	55	62	150	340	6	3720
	10	55	55	62	150	340	6	3220
	12	55	55	62	150	360	6	2900
	15	55	55	62	150	360	6-7	2330
	20	55	55	62	155	380	8	1430
	25	55	55	62	160	380	10	930

Notes:
- Minimum N_2 inlet supply pressure remains at one setting of 150 psi (10.3 bar) for all material thickness.
- Water chiller pump outlet pressure remains between 175-185 psi (12-12.8 bar) for all material thickness.
- N_2 flow rate at full scale is 374 scfh (176 l/min) @ 150 psi (10.3 bar) inlet pressure.
- Set initial torch height (before piercing) to approximately twice the Torch Standoff distance for the material you are cutting.
  Note: If arc does not transfer when set at twice the torch standoff (in the case of thick metal being cut at high current), gradually lower the initial height of the torch until transfer occurs.

HT4001 with Slave

PAC620 Torch – Standard Consumables

Mild Steel or Stainless Steel – Nitrogen Plasma

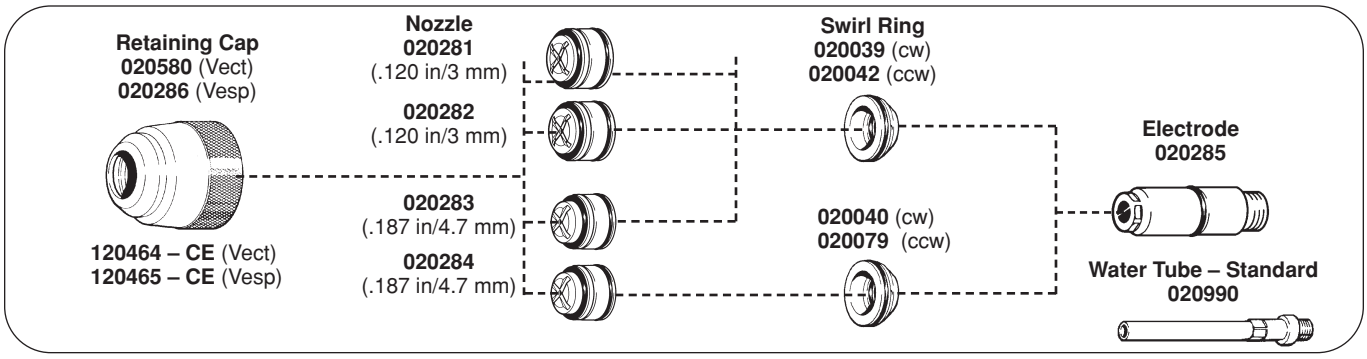

ENGLISH

Nozzle	Material Thickness (in)	Material Thickness (mm)	Test Preflow Rate (N_2) (%)	Test Cut Flow Rate (N_2) (%)	Water Flow Setting (%)	Arc Volts (V)	Arc Current (A)	Torch Standoff (in)	Torch Standoff (mm)	Travel Speed (ipm)	Travel Speed (mm/min)
.120" 260A max.	.035	.889	30	30	45	125	260	1/8	3	450	11430
	.075	1.91	30	30	45	130	260	1/8	3	300	7620
	1/8	3.18	30	30	45	135	260	1/4	6	200	5080
	1/4	6.35	30	30	45	145	260	5/16	8	145	3680
.166" 400A max.	1/8	3.18	45	45	62	140	300	1/4	6	175	4450
	1/4	6.35	45	45	62	140	360	1/4	6	145	3690
	3/8	9.53	45	45	62	145	360	1/4	6	125	3180
	1/2	12.7	45	45	62	150	400	1/4	8	95	2420
	3/4	19.1	45	45	62	150	400	5/16	8	50	1270
	1	25.4	45	45	62	155	400	3/8	10	30	760
.187" 600A max.	1/2	12.7	45	45	65	145	480	5/16	8	110	2800
	3/4	19.1	45	45	65	155	500	3/8	10	70	1780
	1	25.4	45	45	65	160	560	3/8	10	60	1530
	1-1/2	38.1	45	45	65	170	600	3/8	10	30	760
	2	50.8	45	45	65	180	600	3/8	10	20	510
.220" 760A max.	2	50.8	70	70	73	180	700	1/2	13	25	630
	3	76.2	70	70	73	200	760	5/8	16	12	300

METRIC

Nozzle	Material Thickness (mm)	Test Preflow Rate (N_2) (%)	Test Cut Flow Rate (N_2) (%)	Water Flow Setting (%)	Arc Volts (V)	Arc Current (A)	Torch Standoff (mm)	Travel Speed (mm/min)
3 mm 260A max.	6	30	30	45	145	260	8	3800
4.2 mm 400A max.	6	45	45	62	140	360	6	3770
	8	45	45	62	145	360	6	3430
	10	45	45	62	145	360	6	3050
	12	45	45	62	150	380	6	2600
	15	45	45	62	150	400	6-7	2000
	20	45	45	62	150	400	9	1200
	25	45	45	62	155	400	10	790
4.7 mm 600A max.	15	45	45	65	150	500	9	2400
	20	45	45	65	155	500	10	1750
	25	45	45	65	160	560	10	1540
	35	45	45	65	165	580	10	950
	50	45	45	65	180	600	10	520
5.5 mm 760A max.	60	70	70	73	190	740	15	510
	75	70	70	73	200	760	16	320

Notes:
- Minimum N_2 inlet supply pressure remains at one setting of 150 psi (10.3 bar) for all material thickness.
- Water chiller pump outlet pressure remains between 175-185 psi (12-12.8 bar) for all material thickness.
- N_2 flow rate at full scale is 374 scfh (176 l/min) @ 150 psi (10.3 bar) inlet pressure.
- Set initial torch height (before piercing) to approximately twice the Torch Standoff distance for the material you are cutting.
  Note: If arc does not transfer when set at twice the torch standoff (in the case of thick metal being cut at high current), gradually lower the initial height of the torch until transfer occurs.

HT4001 with Slave

PAC620 Torch – Standard Consumables

Aluminum – Nitrogen Plasma

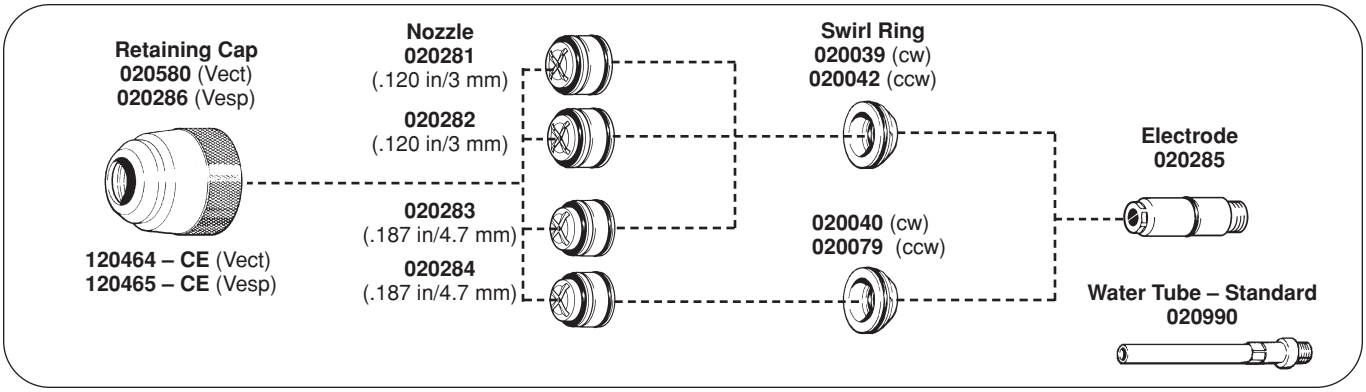

ENGLISH

Nozzle	Material Thickness (in)	Material Thickness (mm)	Test Preflow Rate (N_2) (%)	Test Cut Flow Rate (N_2) (%)	Water Flow Setting (%)	Arc Volts (V)	Arc Current (A)	Torch Standoff (in)	Torch Standoff (mm)	Travel Speed (ipm)	Travel Speed (mm/min)
.120" 260A max.	.035	.889	30	30	45	125	260	1/8	3	540	13710
	.075	1.91	30	30	45	130	260	1/8	3	360	9150
	1/8	3.18	30	30	45	135	260	3/16	5	240	6100
	1/4	6.35	30	30	45	145	260	1/4	6	180	4570
.166" 400A max.	1/8	3.18	45	45	62	140	300	1/4	6	230	5840
	1/4	6.35	45	45	62	145	320	1/4	6	180	4570
	3/8	9.53	45	45	62	150	360	1/4	6	150	3810
	1/2	12.7	45	45	62	150	380	1/4	6	120	3050
	3/4	19.1	45	45	62	160	400	5/16	8	60	1530
	1	25.4	45	45	62	170	400	3/8	10	35	890
.187" 600A max.	1	25.4	45	45	65	155	500	3/8	10	80	2030
	1-1/2	38.1	45	45	65	170	560	3/8	10	45	1150
	2	50.8	45	45	65	180	600	3/8	10	30	760
.220" 760A max.	2	50.8	70	70	73	180	700	1/2	13	30	760
	3	76.2	70	70	73	200	760	5/8	16	15	380

METRIC

Nozzle	Material Thickness (mm)	Test Preflow Rate (N_2) (%)	Test Cut Flow Rate (N_2) (%)	Water Flow Setting (%)	Arc Volts (V)	Arc Current (A)	Torch Standoff (mm)	Travel Speed (mm/min)
3 mm 260A max.	6	30	30	45	145	260	6	4740
4.2 mm 400A max.	6	45	45	62	145	320	6	4700
	8	45	45	62	150	340	6	4170
	10	45	45	62	150	360	6	3700
	12	45	45	62	150	380	6	3200
	15	45	45	62	155	400	7	2500
	20	45	45	62	160	400	8-9	1420
	25	45	45	62	170	400	10	930
4.7 mm 600A max.	30	45	45	65	165	540	10	1710
	40	45	45	65	175	600	10	1090
	50	45	45	65	180	600	10	780
5.5 mm 760A max.	60	70	70	73	190	740	14	620
	75	70	70	73	200	760	16	380

Notes:
- Minimum N_2 inlet supply pressure remains at one setting of 150 psi (10.3 bar) for all material thickness.
- Water chiller pump outlet pressure remains between 175-185 psi (12-12.8 bar) for all material thickness.
- N_2 flow rate at full scale is 374 scfh (176 l/min) @ 150 psi (10.3 bar) inlet pressure.
- Set initial torch height (before piercing) to approximately twice the Torch Standoff distance for the material you are cutting.
  Note: If arc does not transfer when set at twice the torch standoff (in the case of thick metal being cut at high current), gradually lower the initial height of the torch until transfer occurs.

HT4001 with Slave

PAC620 Torch – Beveling Consumables

Mild Steel or Stainless Steel – Nitrogen Plasma

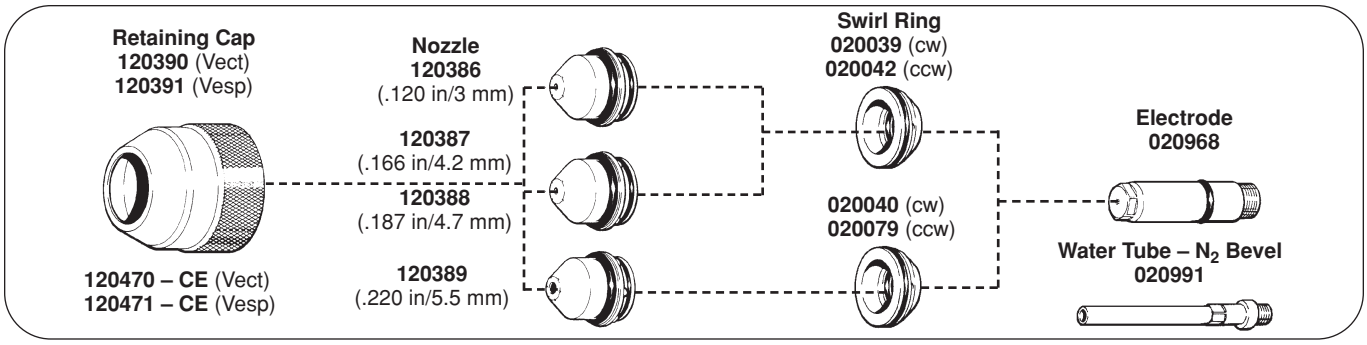

ENGLISH

Nozzle	Material Thickness (in)	Material Thickness (mm)	Test Preflow Rate (N_2) (%)	Test Cut Flow Rate (N_2) (%)	Water Flow Setting (%)	Arc Volts (V)	Arc Current (A)	Torch Standoff (in)	Torch Standoff (mm)	Travel Speed (ipm)	Travel Speed (mm/min)
.120" 260A max.	.035	.889	30	30	45	125	240	1/8	3	425	10800
	.075	1.91	30	30	45	130	240	1/8	3	285	7240
	1/8	3.18	30	30	45	145	240	3/16	5	190	4820
	1/4	6.35	30	30	45	155	240	3/16	6	145	3680
.166" 400A max.	1/8	3.18	45	45	62	125	300	1/4	6	170	4320
	1/4	6.35	45	45	62	135	340	1/4	6	140	3550
	3/8	9.53	45	45	62	145	360	1/4	6	120	3050
	1/2	12.7	45	45	62	145	380	5/16	7	90	2280
	3/4	19.1	45	45	62	150	400	5/16	7	50	1270
	1	25.4	45	45	62	155	400	3/8	10	30	760
.187" 600A max.	1/2	12.7	55	55	65	140	480	3/8	10	100	2540
	3/4	19.1	55	55	65	145	500	3/8	10	70	1780
	1	25.4	55	55	65	150	560	3/8	10	60	1520
	1-1/2	38.1	55	55	65	165	580	3/8	10	30	760
	2	50.8	55	55	65	175	600	7/16	10	20	510
.220" 760A max.	1-1/4	31.8	60	60	73	170	700	1/2	13	40	1020
	2	50.8	60	60	73	175	720	1/2	13	25	630
	3	76.2	60	60	73	185	760	5/8	16	12	300

METRIC

Nozzle	Material Thickness (mm)	Test Preflow Rate (N_2) (%)	Test Cut Flow Rate (N_2) (%)	Water Flow Setting (%)	Arc Volts (V)	Arc Current (A)	Torch Standoff (mm)	Travel Speed (mm/min)
3 mm 260A max.	6	30	30	45	155	240	5	3800
4.2 mm 400A max.	6	45	45	62	135	340	6	3640
	8	45	45	62	140	360	6	3300
	10	45	45	62	145	360	6	2930
	12	45	45	62	145	380	6-7	2450
	15	45	45	62	150	400	8	1910
	20	45	45	62	150	400	8	1190
	25	45	45	62	155	400	10	790
4.7 mm 600A max.	15	55	55	65	140	500	10	2260
	20	55	55	65	145	500	10	1740
	25	55	55	65	150	560	10	1540
	35	55	55	65	160	580	10	950
	50	55	55	65	175	600	11	530
5.5 mm 760A max.	35	60	60	73	170	700	13	950
	50	60	60	73	175	720	13	650
	60	60	60	73	180	740	15	510
	75	60	60	73	185	760	16	320

Notes:
- Minimum N_2 inlet supply pressure remains at one setting of 150 psi (10.3 bar) for all material thickness.
- Water chiller pump outlet pressure remains between 175-185 psi (12-12.8 bar) for all material thickness.
- N_2 flow rate at full scale is 374 scfh (176 l/min) @ 150 psi (10.3 bar) inlet pressure.
- Set initial torch height (before piercing) to approximately twice the Torch Standoff distance for the material you are cutting. Note: If arc does not transfer when set at twice the torch standoff (in the case of thick metal being cut at high current). gradually lower the initial height of the torch until transfer occurs.

HT4001 with Slave

PAC620 Torch – Beveling Consumables

Aluminum – Nitrogen Plasma

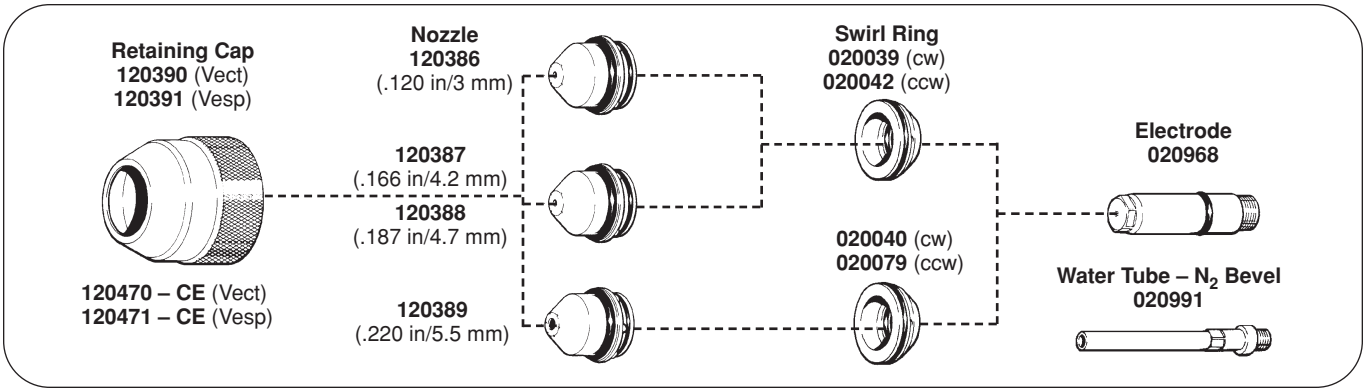

ENGLISH

Nozzle	Material Thickness (in)	Material Thickness (mm)	Test Preflow Rate (N_2) (%)	Test Cut Flow Rate (N_2) (%)	Water Flow Setting (%)	Arc Volts (V)	Arc Current (A)	Torch Standoff (in)	Torch Standoff (mm)	Travel Speed (ipm)	Travel Speed (mm/min)
.120" 260A max.	.035	.889	30	30	45	120	240	1/8	3	520	13200
	.075	1.91	30	30	45	125	240	1/8	3	345	8760
	1/8	3.18	30	30	45	130	260	3/16	5	230	5840
	1/4	6.35	30	30	45	140	260	1/4	6	170	4320
.166" 400A max.	1/8	3.18	55	55	62	140	280	1/4	6	220	5590
	1/4	6.35	55	55	62	150	320	1/4	6	165	4190
	3/8	9.53	55	55	62	150	340	1/4	6	130	3300
	1/2	12.7	55	55	62	150	360	1/4	6	110	2790
	3/4	19.1	55	55	62	150	380	5/16	8	60	1520
	1	25.4	55	55	62	165	380	3/8	10	35	890
.187" 600A max.	1	25.4	55	55	65	165	500	3/8	10	70	1780
	1-1/2	38.1	55	55	65	170	600	3/8	10	35	890
	2	50.8	55	55	65	170	600	3/8	10	25	630
.220" 760A max.	2	50.8	60	60	73	175	700	1/2	13	30	760
	3	76.2	60	60	73	200	760	5/8	16	20	510

METRIC

Nozzle	Material Thickness (mm)	Test Preflow Rate (N_2) (%)	Test Cut Flow Rate (N_2) (%)	Water Flow Setting (%)	Arc Volts (V)	Arc Current (A)	Torch Standoff (mm)	Travel Speed (mm/min)
3 mm 260A max.	6	30	30	45	140	260	6	4500
4.2 mm 400A max.	6	55	55	62	150	320	6	4350
	8	55	55	62	150	340	6	3700
	10	55	55	62	150	340	6	3200
	12	55	55	62	150	360	6	2900
	15	55	55	62	150	360	7	2350
	20	55	55	62	150	380	8	1400
	25	55	55	62	165	380	10	930
4.7 mm 600A max.	30	55	55	65	170	560	10	1460
	35	55	55	65	170	600	10	1100
	50	55	55	65	170	600	10	650
5.5 mm 760A max.	60	60	60	73	190	740	14	680
	75	60	0	73	200	760	16	520

Notes:
- Minimum N_2 inlet supply pressure remains at one setting of 150 psi (10.3 bar) for all material thickness.
- Water chiller pump outlet pressure remains between 175-185 psi (12-12.8 bar) for all material thickness.
- N_2 flow rate at full scale is 374 scfh (176 l/min) @ 150 psi (10.3 bar) inlet pressure.
- Set initial torch height (before piercing) to approximately twice the Torch Standoff distance for the material you are cutting.
  Note: If arc does not transfer when set at twice the torch standoff (in the case of thick metal being cut at high current). gradually lower the initial height of the torch until transfer occurs.

Changing Consumable Parts

	WARNING
Always disconnect the power supply from the main power source before inspecting or changing the torch parts.	

Inspect the consumable parts before cutting for wear, and replace when needed. **Always place the consumables on a clean, dry, oil free surface after removing. Dirty consumables can cause the torch to malfunction.** Refer to Figure 5-10.

Removal and Inspection

1. Unscrew the retaining cap. If the torch is using one of the CE retaining caps, use the CE cap tool (004732) to remove the retaining cap.

2. Remove the nozzle from the torch. Check the ceramic portion of the nozzle for signs of wear and arcing.

3. Unscrew the electrode from the torch head using a 7/16" (11 mm) hex wrench (wrench supplied in all of the spare parts kits). Replace the electrode if the crater in the center of the insert is in excess of .050 inch (1.3 mm) deep.

4. Remove the swirl ring from the electrode and inspect it for plugged holes or other damage.

5. If the tip of the water tube is damaged at all, see *Changing the Water Tube* later in this section.

Replacement

Before replacing the consumable parts, clean the current ring in the torch – see Figure 5-10. Use a clean paper towel or cotton swab to remove any dirt, grease, etc., from the current ring.

1. Replace the electrode by screwing it back into the torch head. Use the 7/16" (11 mm) socket wrench to tighten down the electrode. **Do not overtighten.**

2. Apply a light coating of silicone grease to both O-rings of the swirl ring before installing. As a guideline, you should be able to feel the grease on your fingers, but not see it. **Do not use an excessive amount of grease.** Too much grease will plug the swirl ring ports, causing improper gas flow during operation.

   When installing the swirl ring, make sure to place the smaller diameter end up toward the rear of the torch.

3. Before installing the nozzle, apply a small amount of silicone grease to the nozzle's O-rings. As a guideline, you should be able to feel the grease on your fingers, but not see it. **Do not use an excessive amount of grease.** Insert the nozzle into the torch and push it into place.

4. Replace the retaining cap by **tightening it snugly by hand to insure good electrical contact** between the nozzle and the torch. If the torch is using one of the CE retaining caps, use the CE cap tool to replace the retaining cap.

   If the cap does not go on easily, clean the threads on the torch body and the retaining cap and apply a small amount of silicone grease to the O-ring located just below the threads of the torch body.

   Note: Failure to tighten the retaining cap snugly (or to keep the threads and current ring clean) will result in pitting of the stainless steel current ring causing gas and water leaks around the upper nozzle O-ring, impairing cut quality. Unless using the CE cap tool for CE retaining caps, the **retaining cap should be tightened by hand only.**

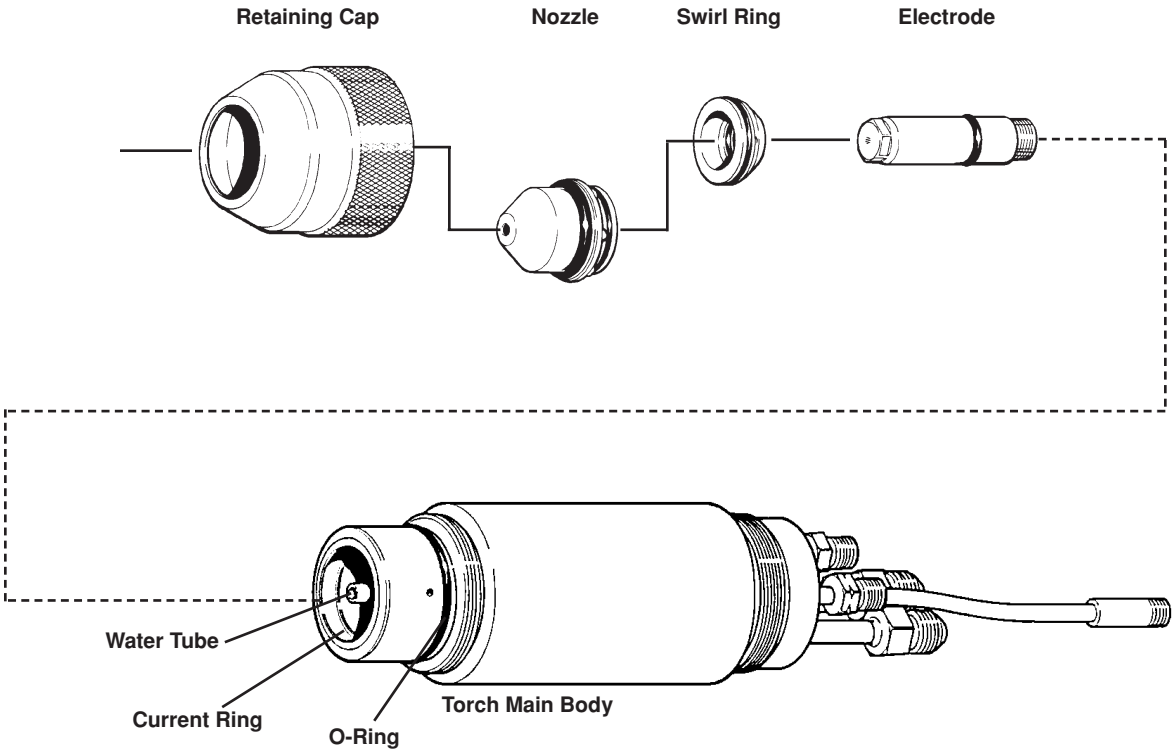

Figure 5-10 Changing Consumable Parts

Changing the Water Tube

Problems and causes you may find with a defective or improperly installed water tube:

- Short electrode life: Water tube not screwed in tightly; wrong water tube for consumables
- Flow switch interlock shutting down the system: Water flow restricted due to loose water tube.
- Humming or rattling sound coming from the torch: Water tube bent or loose

If you suspect a problem with the water tube, you may need to replace it.

1. Disconnect power supply from power source.
2. Remove all consumables from torch (see *Changing Consumable Parts* earlier in this section.
3. Verify that the correct water tube is installed – The standard water tube (020990) is recessed about 5/64 of an inch (2 mm) from the end of the torch head. The nitrogen beveling water tube (020991) extends about 19/64 of and inch (7.5 mm) from the end of the torch head. The oxygen beveling water tube (020992) extends about 23/64 of an inch (9.1 mm) from the end of the torch head.
   Note: part numbers are laser engraved on the water tubes.
4. Look for any damage or bends in the water tube.
5. Remove and replace the water tube by using the water tube wrench (027347) supplied with the consumable parts kits – Fig. 5-11. **When installing water tube, do not overtighten!** Snug down by hand only.

WARNING

Always disconnect the power supply from the main power source before inspecting or changing the torch parts.

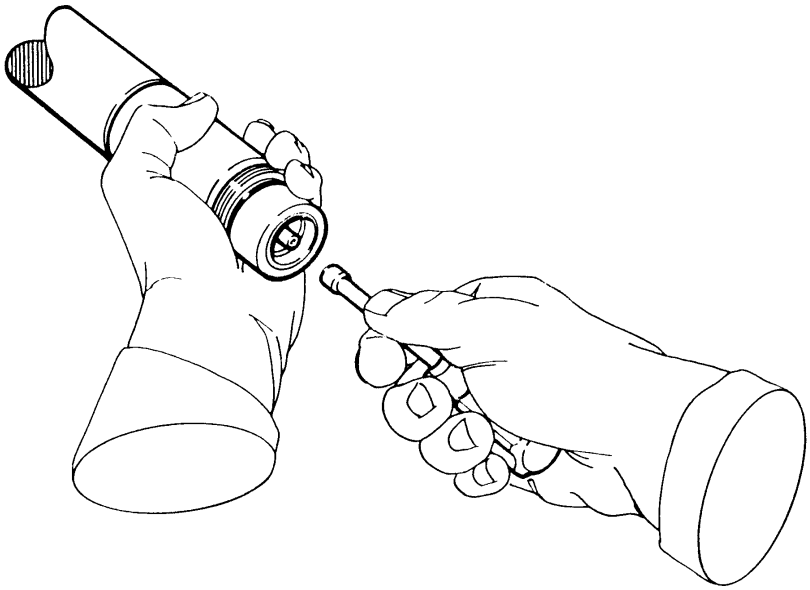

Figure 5-11 Changing the Water Tube

Hypertherm

Section 6

MAINTENANCE

In this section:

Introduction 6-2
Routine Maintenance 6-3
Torch and Torch Leads 6-3
Power Supplies 6-3
Gas Console 6-4
Motor Valve Console 6-4
Remote HF Console 6-4
HT4001 Initialization and Sequence of Operation 6-5
Initial Checks 6-11
Troubleshooting 6-14
STATUS LED Troubleshooting 6-20
Chopper Module Test Procedure 6-22
Relay Board PCB4 Status Indicators 6-24
Error Codes 6-28
Torch Coolant Draining 6-30

Introduction

The HT4001, and all Hypertherm plasma systems, undergo rigorous testing prior to shipment and should require little maintenance if proper installation and operation procedures are followed.

In this section are: routine maintenance procedures, initialization and sequence of operation flowcharts, an initial checks procedure, a troubleshooting guide to aid in servicing the HT4001 system including a troubleshooting guide for the STATUS indicators, a chopper module test procedure and a description of the relay board status LEDs.

Hypertherm assumes that the service personnel performing the troubleshooting testing are high-level electronic service technicians that have worked with high voltage electro-mechanical systems. Knowledge of final isolation troubleshooting techniques is also assumed.

In addition to being technically qualified, maintenance personnel must perform all testing with safety in mind. Refer to the *Safety* section for operating precautions and warning formats.

If you need additional assistance or need to order parts, call our Customer Service or Technical Service Group at 1-800-647-9878.

WARNING

SHOCK HAZARD: The large electrolytic capacitor(s) (blue-cased cylinder(s)) store large amounts of energy in the form of electric voltage. Even if the power is off, dangerous voltages exist at the capacitor terminals, on the chopper, and the diode heatsinks. Never discharge the capacitor(s) with a screwdriver or other implement … explosion, property damage and/or personal injury will result. Wait at least five minutes after turning the power supply off before touching the chopper or the capacitor(s).

Routine Maintenance

The HT4001 system is designed to require little regular maintenance under normal use. The following maintenance checks, are suggested to keep your system in top running condition.

Torch and Torch Leads (See also Torch Coolant Draining at the end of this section)

Inspection

Inspect the torch and torch leads on a routine basis.

- The torch consumable parts and torch main body should always be inspected prior to cutting. Worn or damaged parts can cause gas and water leaks which can affect the cut quality. Check for pitting and burn marks on the consumable parts and replace, if necessary. See *Changing Consumable Parts* in **Section 5.**
- Ensure that all connections are tight, but do not overtighten.
- The torch leads should be checked occasionally for cracking and damage.

Power Supplies

Inspection

Inspect the power supplies on a routine basis

- Check the exterior for any damage. If there is damage, ensure it does not affect safe operation of the power supply.
- Remove covers and inspect the interior. Check wiring harnesses and connections for wear and damage. Check for loose connections, and look for areas of discoloration due to overheating.
- Inspect the contacts on the contactor every 2 months. Worn contacts can be replaced by ordering kit 129972 for all voltages except 200V or 129973 for 200V power supplies.

Cleaning

Cleaning the power supply periodically is necessary to keep dust and foreign matter from inside the unit.

- Remove the covers and blow out the unit with compressed air. In an excessively dirty environment, clean the power supply on a weekly basis.

Protecting Copper Surfaces

To protect copper surfaces in the injection water/torch coolant open loop, do the following twice a year:

1. Mix a 16 ounce container of corrosion inhibitor benzotriazole (128020) in the water chiller's 45 gallon water reservoir.
2. Turn on the water chiller and run the pump for 2 hours. Do not start the power supply or attempt to cut with the torch while recirculating the solution.
3. Turn water chiller off and leave power supply off for 8 hours.
4. Resume normal operating procedures.

Gas Console

Inspection

Inspect the gas console on a routine basis.

- Check the exterior for any damage. Look for damaged glass tubes in the flowmeters and check the pressure gauges for damage.
- Inspect all interconnecting cables, hoses and leads for wear and damage. Ensure all connections are tight and that there are no leaks. Do not overtighten fittings.

Cleaning

Keep the flowmeters and pressure gauges free of dirt, dust and foreign matter.

Motor Valve Console

Inspection

Inspect the motor valve console on a routine basis.

- Check the exterior for any damage.
- Inspect all interconnecting cables, hoses and leads for wear and damage.
  Ensure all connections are tight and that there are no leaks. Do not overtighten fittings.

Cleaning

Check the valve console periodically for dust and foreign matter inside the unit.

- Open the cover and blow out the unit with compressed air. It is important to keep the cover closed except when cleaning or maintenance is being performed.

Remote HF Console

Inspection

Inspect the RHF console on a routine basis.

- Check the exterior for any damage. If there is damage, ensure that it does not affect safe operation of the console.
- Open the cover and inspect the interior. Check all cables and hoses for wear and damage. Check for loose connections, look for areas of discoloration due to overheating. Check for plumbing leaks.

Cleaning

- Open the cover and blow out the unit with compressed air. It is important to keep the cover closed except when cleaning or when maintenance is being performed.

HT4001 Initialization and Sequence of Operation

On the following page is a flowchart outlining the system initialization during proper HT4001 operation. This flowchart details system functioning from the time the power supply circuit breaker is turned ON, up to the ready state. Following the system initialization is a second flowchart outlining the system sequence of operation beginning with the ready state and continuing through the setup, START command and cutting process. In both flowcharts, shaded boxes represent action taken by the operator.

The following symbols used in the flowcharts are ANSI standard flowcharting symbols. Their names and definitions are as follows:

Terminus

The terminus is used to indicate the beginning or ending point of a flowchart.

Task/Process Box

The process or task box is used to indicate any process or task other than an input/output operation or a decision.

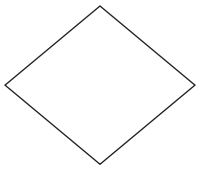

Decision Diamond

The decision diamond is used to indicate a decision or branching point.

Preparation

The preparation symbol is used to indicate an instruction modification.

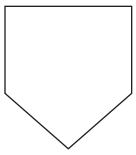

Off-page Connector

The off-page connector is used to indicate exit or entry from another page to the flowchart.

HT4001 Initialization

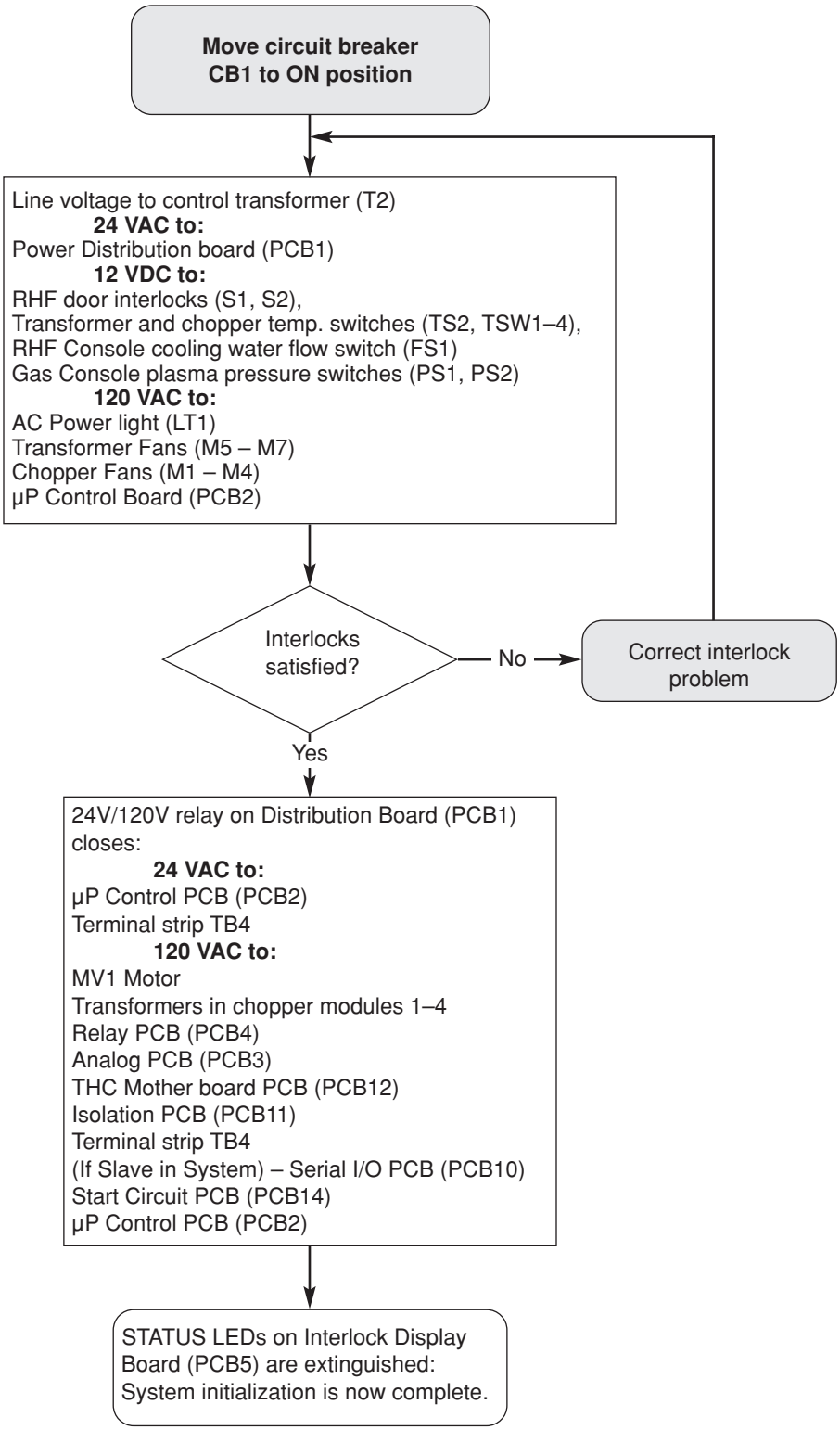

HT4001 Sequence of Operation

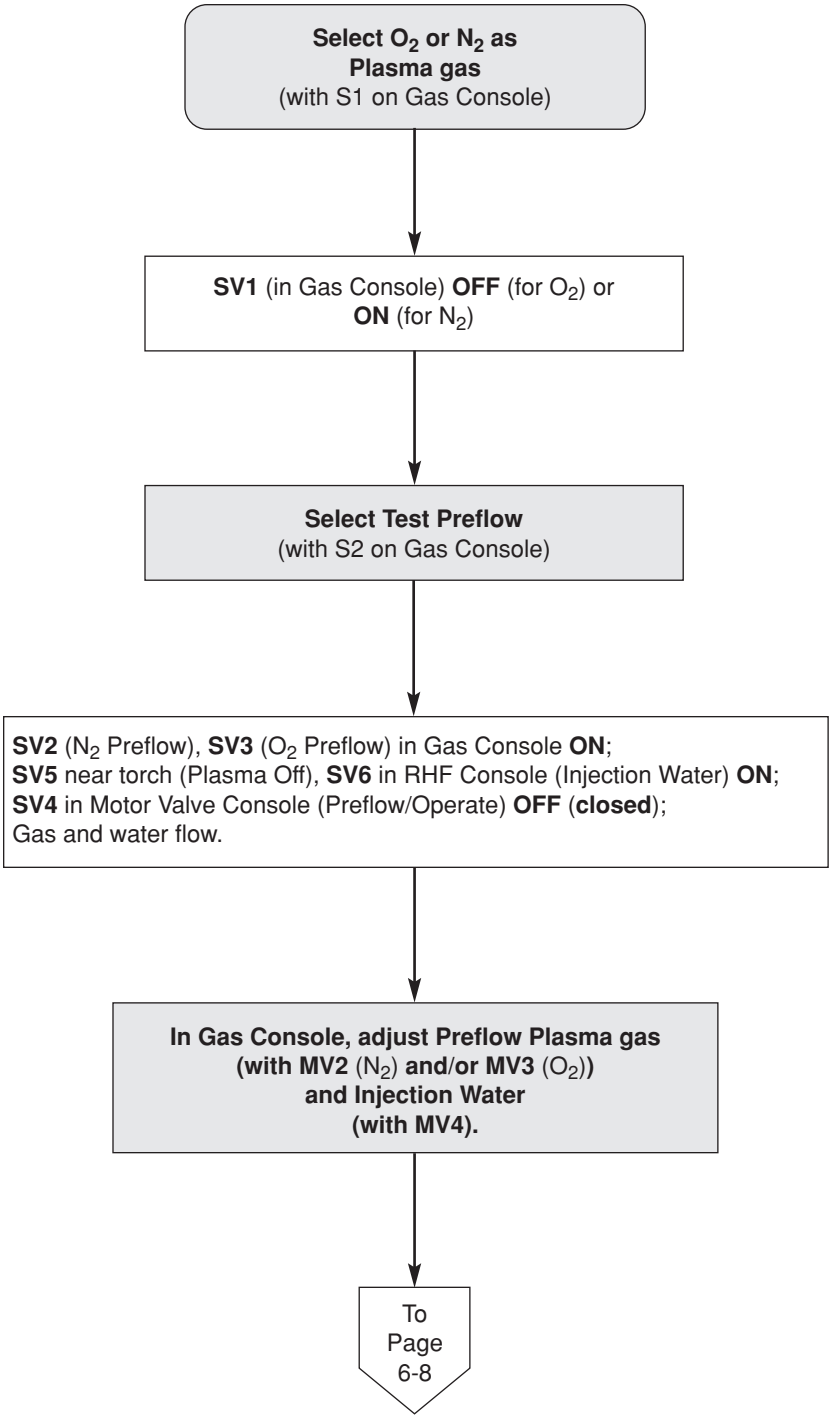

HT4001 Sequence of Operation (cont.)

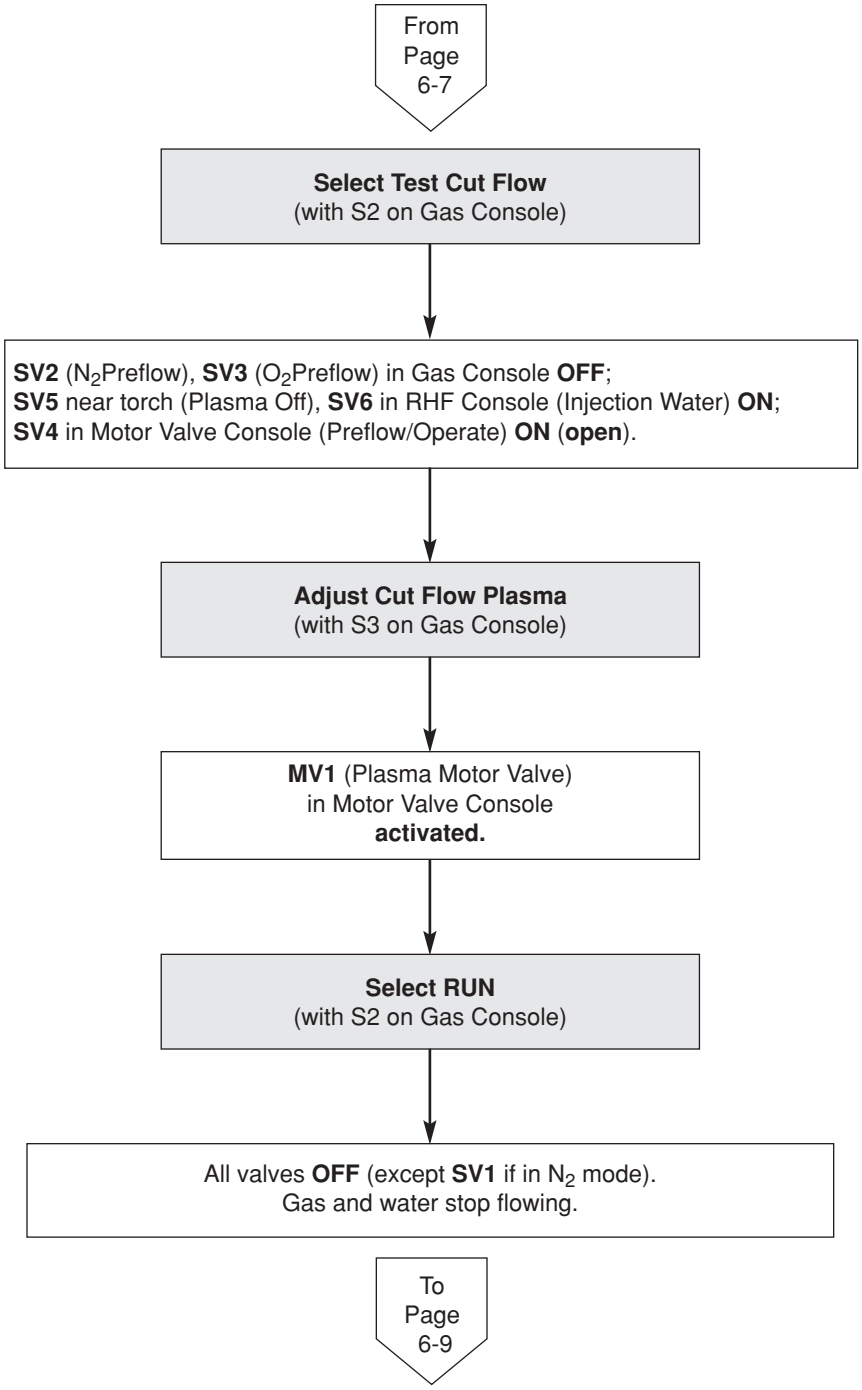

HT4001 Sequence of Operation (cont.)

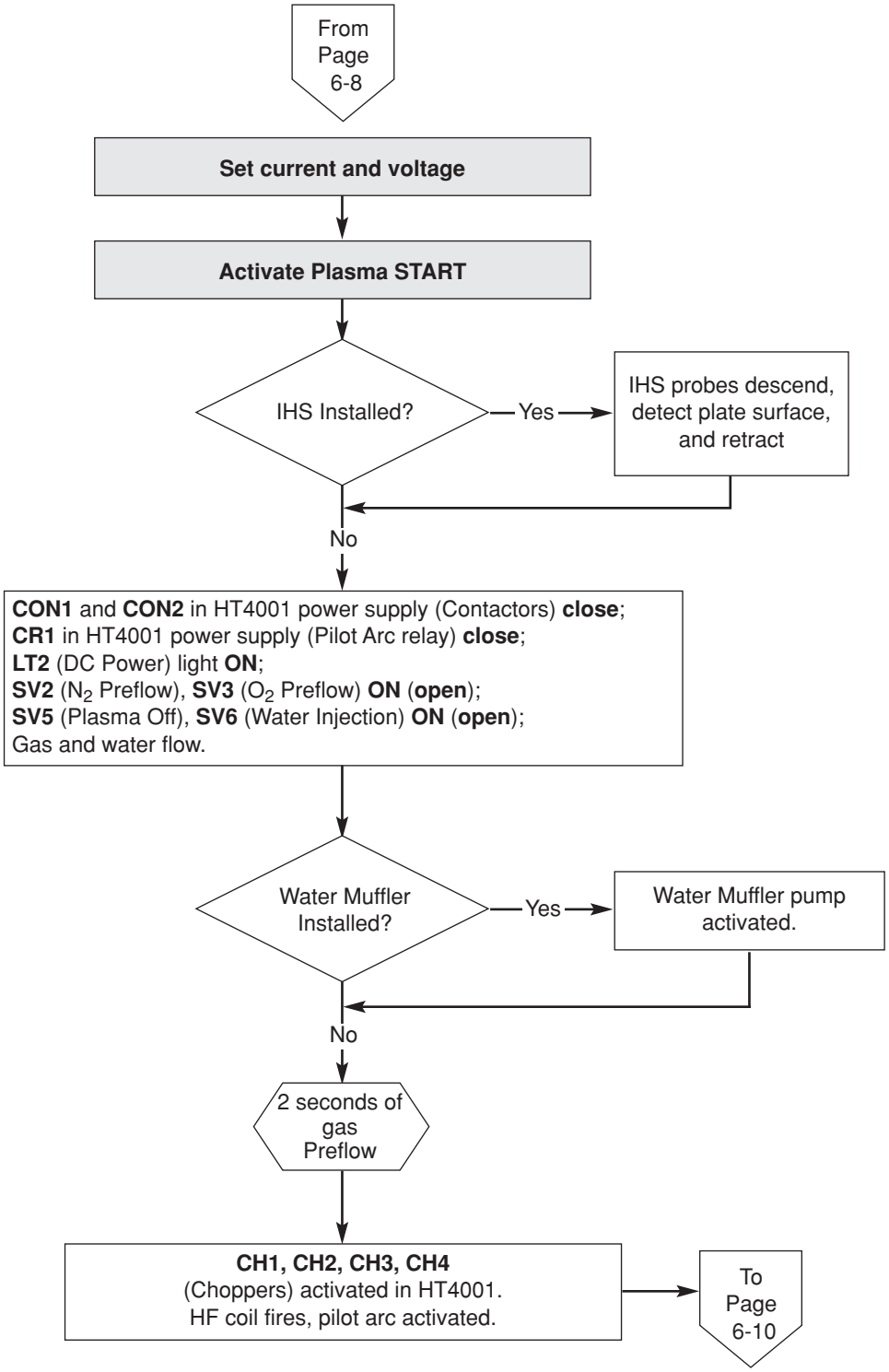

HT4001 Sequence of Operation (cont.)

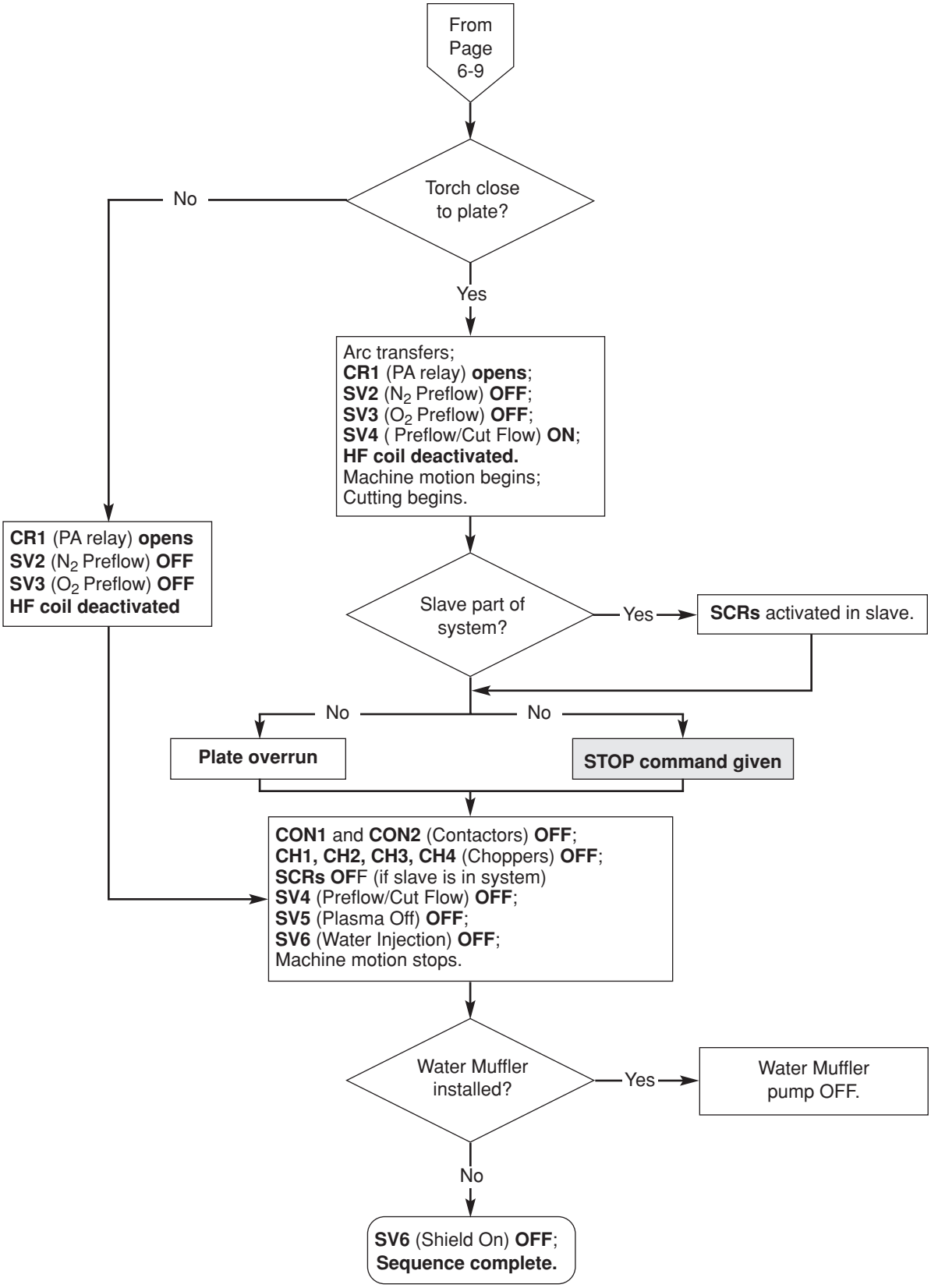

Initial Checks

Before tracking down specific problems, do a visual check and verify proper voltages are present at the power source, transformer(s) and power distribution board.

WARNING

SHOCK HAZARD: Always use caution when servicing a power supply when plugged in and the covers are removed. Dangerous voltages exist within the power supply which could cause injury or death.

1. Disconnect line power by turning main disconnect switch off.

2. Using a Phillips head screwdriver, remove top plate, two side plates, front plate, and rear plate of power unit.

3. Inspect interior of power unit(s) for discoloration on PC boards, or other apparent damage. If a component or module is obviously defective upon visual inspection, remove and replace it before doing any testing. Refer to the *Parts List* section to identify parts and part numbers.

4. If no damage is apparent, plug in the power supply unit(s), and apply power by turning on the main disconnect switch.

5. Measure the voltage at CON1 between L1, L2 and L3. Refer to Figure 6-1 for detail of CON1. The voltage between any two of the three points at CON1 should be equal to your supply line voltage. If there is a problem at this point, disconnect main power and check connections, power cable, and fuses or circuit breaker at main power disconnect box. Repair and/or replace defective component(s) if necessary.

   For the 400 volt CE power supplies, measure the voltage between the U, V and W terminals of TB5 in the EMI filter located on the top of the HT4001 power supply. Refer to Appendix C. Also refer to the wiring diagram in **Section 8**, if required. The voltage between any two of the three terminals should be equal to the supply voltage. If there is a problem at this point, disconnect main power and check connections, power cable, and fuses at line disconnect switch. Repair and/or replace defective component(s) if necessary.

   For the 200/220 – volt power supplies, measure the voltage between the L1, L2 and L3 terminals of TB5 located on the top of the HT4001 power supply. Refer to Appendix D. Also refer to the wiring diagram in **Section 8**, if required. The voltage between any two of the three terminals should be equal to the supply voltage (200 or 220 VAC). If there is a problem at this point, disconnect main power and check connections, power cable, and fuses at line disconnect switch. Repair and/or replace defective component(s) if necessary.

(Continued on page 6-13)

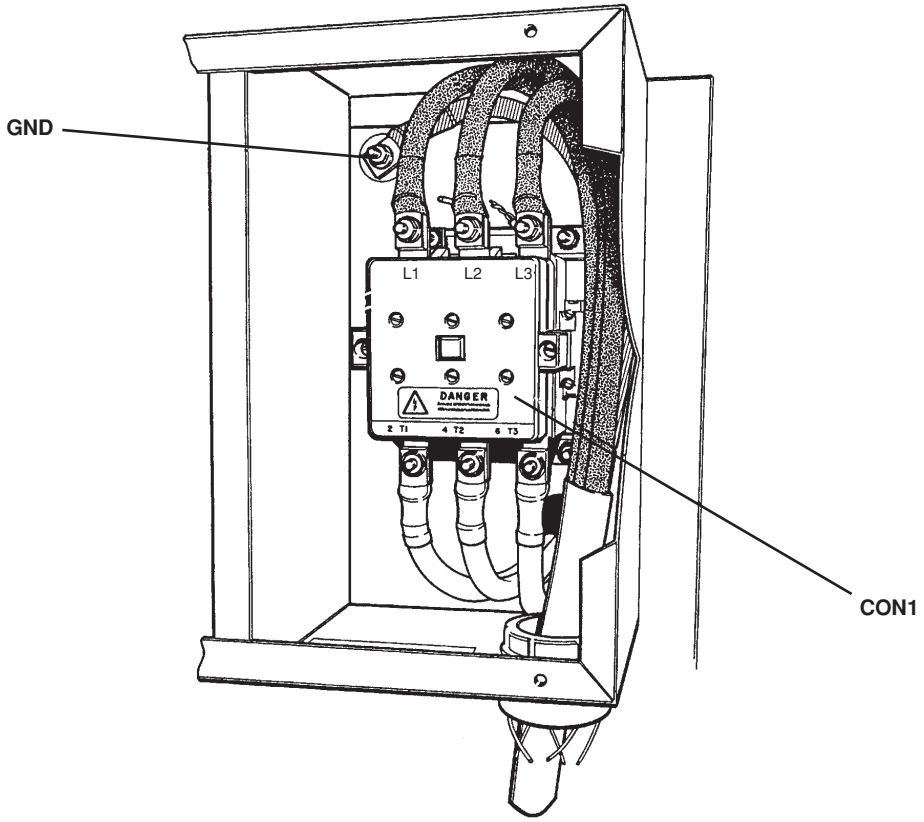

Figure 6-1 Primary Power Measurement Location – HT4001

WARNING

There is line voltage at the contactors after the line disconnect switch is ON, even if the circuit breaker on the HT4001 power supply is OFF. As a common safety practice, ALWAYS verify that the line disconnect switch is in the OFF position before installing, disconnecting or servicing in these areas.

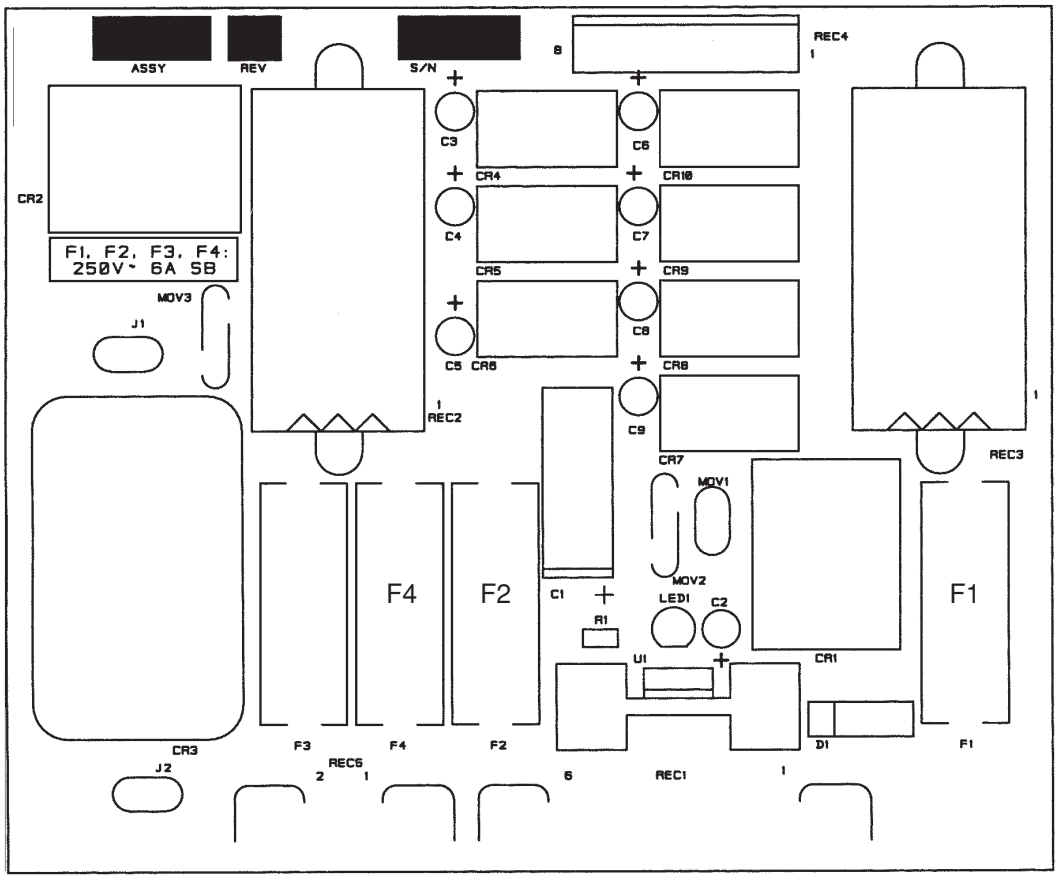

Figure 6-2 Power Distribution Board PCB1

6. Measure voltage at power distribution board PCB1. Refer to Figure 6-2 for detail of PCB1. Look on the board for fuses F1, F2 and F4. Measurements between each fuse and chassis ground should be as follows:

F1:	24 VAC
F2:	120 VAC
F4:	120 VAC

If voltages are not present, or incorrect at one or more of these points, disconnect power and troubleshoot PCB1 fuses and associated pins, connectors and wiring between power distribution board connector REC1 and control transformer secondary T1.

Also, check wiring and connections between T1, CB1, CON1, and L1 and L2.

Repair and/or replace defective component(s) if necessary.

Troubleshooting

The troubleshooting section is presented by following normal operational sequence.

Before troubleshooting for specific problems, be sure that unit passes *Initial Checks* as outlined earlier in this section.

WARNING

SHOCK HAZARD: Always use caution when servicing a power supply when the covers are removed. Dangerous voltages exist within the power supply which could cause injury or death. If questions or problems arise during servicing, call the Hypertherm Technical Services Department at 1-800-647-9878.

Move circuit breaker CB1 to ON position

Problem	*Possible Causes* and Solutions
1. The fans are not operating and the POWER AC indicator does not illuminate.	**1.1.** *Main disconnect switch is in OFF position.* Turn main disconnect switch ON.
	1.2. *Associated wiring not making good contact.* Check wiring from main disconnect switch to REC1 of power distribution board.
	1.3. *CR2 on the power distribution board (PCB1) is defective.* Check that CR2 switches when CB1 is switched to ON. See Figure 6-2 for location of CR2. If CR2 is defective, replace PCB1.
2. The POWER AC indicator illuminates, but the fans are not running.	**2.1.** *Terminal lugs located at the fans (see Figure 7-1 for location of fans) are not seated together securely and/or not getting 120VAC from power distribution board.* • Check pins, connectors and associated wiring for good continuity. • Check for 120VAC at the terminals.

Problem	*Possible Causes* and Solutions
3. The fans are running, but the POWER AC indicator is not illuminated.	**3.1.** *Light bulb LT1 is blown.* Replace LT1. See page 7-5 for part number information.
4. The POWER AC indicator is illuminated, the fans are running, but one or more of the STATUS indicators is also illuminated.	**4.1.** *There is an interlock fault condition.* To troubleshoot STATUS fault conditions, see *Status LED Troubleshooting* later in this section.

Select Test Preflow
(with S2 on Gas Console)

5. No gas flow.	**5.1.** *Gas supply is turned off.* Turn supply gas ON. **5.2.** *Leak in gas hose.* Check for and repair/replace leaking hose. **5.3.** *Metering valves MV2 (N_2) or MV3 (O_2) closed.* Open valves. See page 5-5 for location of MV2 and MV3. **5.4.** *One or more solenoid valves not functioning or not getting signal to open or close from relay board.* See *Sequence of Operation* flowchart to determine which valves are on or off. Use system wiring diagrams and relay board status indicators in Test Preflow mode later in this section to troubleshoot.
6. Cannot adjust gas to proper level.	**6.1.** *Hosing from supply is pinched.* Check and repair any kinks in hosing line. **6.2.** *Leak in gas hose.* Check for and repair/replace leaking hose. **6.3.** *Supply hose inner diameter is too small.* Use larger diameter hose.

Problem	*Possible Causes* and Solutions
7. No injection water flow.	**7.1.** *Water supply is turned off.* Turn water supply ON. **7.2.** *Water chiller is turned off.* Turn water chiller ON. **7.3.** *Leak(s) in water hose(s).* Check for and repair/replace leaking hose(s). **7.4.** *Injection water metering valve MV4 is closed.* Open valve. See page 5-5 for location of MV4. **7.5.** *Solenoid valve SV6 not functioning or not getting signal to open from relay board.* Use system wiring diagrams and relay board status indicators in Test Preflow mode later in this section to troubleshoot.

Select Test Cut flow
(with S2 on Gas Console)

8. No gas flow.	*See problem 5.*
9. Cannot adjust gas to proper level.	**9.1.** *Hosing from supply is pinched.* Check and repair any kinks in hosing line. **9.2.** *Leak in gas hose.* Check for and repair/replace leaking hose. **9.3.** *Supply hose inner diameter is too small.* Use larger diameter hose. **9.4.** *MV1 in Motor Valve Console not being activated or not functioning.* Check wiring from S3 on Gas Console to MV1 in Motor Valve Console. If wiring is OK, check for 120VAC when activating switch. If there is no 120VAC, check voltage/wiring from S3 to power distribution board (PCB1). Repair and/or replace defective component(s).
10. No injection water flow.	*See problem 7.*

Problem	*Possible Causes* and Solutions
	Select RUN (with S2 on Gas Console)
11. Gases and/or water continue to flow.	**11.1.** *One or more valves not closing.* All valves should close when in RUN mode (except SV1 if in N_2 mode). Check wiring using the system wiring diagram as reference to troubleshoot.
	Activate Plasma START
12. The POWER DC indicator is illuminated, but there is no high frequency and no pilot arc.	**12.1.** *There is no spark between the spark gap electrodes.* (Spark gap assembly is located in the RHF console) Clean (with emery cloth), align, and/or re-gap (.020" per gap) the electrodes, if necessary. Ensure that the electrode surfaces between the gaps are flat. If surfaces are rounded, replace and re-gap. • Visually inspect the high voltage transformer T1 in the RHF console for leaking oil or overheating. See Figure 7-8 for location of T1. Replace T1 if leaking or overheating. • Check for 120VAC at T1 after START command is given. Note that door interlock switches S1 and S2 have to be closed in order to pass the START sequence. Switch will close in both IN position, and if pulled OUT. • If there is <u>no</u> 120VAC at T1, use wiring diagrams and check pins, connectors and associated wiring from T1 to relay board PCB4 (see Figure 6-4 for detail of PCB4). If connections are OK, there may be a problem with relay PCB4 or control board PCB2. • If there <u>is</u> 120VAC at T1, shut down system and remove capacitors C5A and C5B in RHF console. Restart system and see if a faint spark is now observed across the gaps. • If a spark is <u>not</u> observed at the gaps, replace T1. If there <u>is</u> a spark, shut down system, and replace capacitors C5A and C5B. **(Always replace the capacitors in pairs).** **12.2.** *There is no high frequency at the torch.* Check for a shorted torch, a damaged nozzle lead, or loose lead connections. Replace the torch or nozzle lead or tighten the lead connections.

Problem	*Possible Causes* and Solutions
13. The POWER DC indicator illuminates, and there is high frequency, but there is no pilot arc.	**13.1.** *Pilot arc relay CR1 is not closing (not getting 120VAC from relay board PCB4).* See if the CR1 relay contacts close after the START command is given. (See Figure 7-3 for location of CR1) If CR1 does not close: • With an AC voltmeter across the relay, see if 120VAC is coming from PCB4 after START command is given. • If there is no 120VAC, check connectors, terminals, pins, and associated wiring to PCB4. • If wiring is OK, there may be a problem with PCB4 or control board PCB2. **13.2.** *Pilot arc relay CR1 is defective.* If there is 120VAC across the relay (see above steps), and CR1 does not close, replace CR1. **13.3.** *Main contactor (CON1) or PCB4 is defective.* • With an AC voltmeter, see if contactor CON1 is getting 120VAC after START command is given. (The contactor should make a loud clicking sound if it is getting the 120VAC. See Figure 7-7 for location of CON1) If there is no 120VAC, check pins, connectors and associated wiring from CON1 to PCB4. • If wiring is OK, PCB4 or PCB2 may be defective. • If CON1 is getting 120VAC from PCB4 as described above, measure the voltage between all secondary terminals of main transformer T2 going to choppers CH1-CH4 after the START command is given (See sheet 3 of 13 in the wiring diagrams). The voltage between any two of the three points for each chopper should be equal to 200VAC. If there is no voltage at any of the above points, replace CON1. If there is voltage at some but not all of the above points, check wiring and connections to and from T2. If wiring checks out OK, return to *Initial Checks* section and repeat steps 1-5.

Problem	*Possible Causes* and Solutions
14. The unit stops cutting during cut, or cuts poorly.	**14.1.** *Arc not transferring to workpiece.* Check work cable. Good contact must be made in order for the arc to transfer to the workpiece. Connect or repair the work cable.
	14.2. *There is insufficient air or gas pressure.* Check gas inlet pressure specifications under *Cut Charts* in **Operation** section. Check plasma gas and water injection pressures in TEST and RUN modes as specified under *Cut Charts* in **Operation** section.
	14.3. *Consumable parts are worn.* See *Changing Consumable Parts* in the **Operation** section (section 5).
	14.4. *System needs fine tuning to correct a faulty cutting condition.* Optimum cutting sometimes needs to be fine tuned to the application and materials on site. Certain cutting faults can be corrected by adjusting the suggested parameters in the *Cut Charts*. See *Cutting Techniques* beginning on page 5-15.
	14.5. *Torch is getting insufficient current.* Check the arc current setting for the type and thickness of metal you are cutting from the *Cut Charts* in the **Operation** section (section 5).
	14.6. *The power supply has overheated.* Shut down system and wait for unit to cool down. If unit will not restart, see *Status LED Troubleshooting* guide later in this section.
	14.7. *Choppers are defective or not functioning.* See *Chopper Module Test Procedure* later in this section.
	14.8. *Input voltage has dropped below 15% of nominal value.* See *Error Codes* later in this section and *Power Requirements* in **Section 3**.

STATUS LED Troubleshooting

Be certain that the power supply has been through the *Initial Checks* as outlined earlier in this section before troubleshooting STATUS LEDs.

When one of the STATUS LEDs illuminates, there is a fault condition that must be corrected in order for the HT4001 power supply to become operational. If more than one LED illuminates, the system has multiple interlock problems that must be corrected.

Notes: LED ON = ◯ LED OFF = ●
Lower three LEDs not connected to interlocks. See system wiring diagrams for reference.

Problem

Possible Causes and Solutions

1. RHF DOOR illuminated:

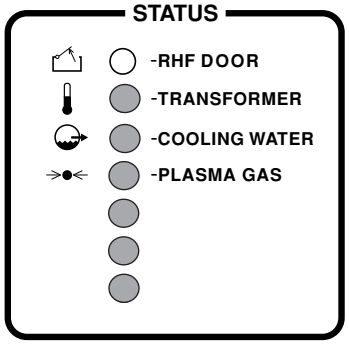

1.1. *RHF door(s) is (are) not closed.*
This LED will extinguish when 12 VDC is able to complete a path through switches S1 and S2 in the RHF console. S1 and S2 are closed when the doors of the RHF console are shut.

- Verify continuity between pins 34&35 of the RHF cable on the power supply connector end. (See sheet 8 in wiring diagrams).
- Verify that S1 and S2 are functioning correctly.
- Check cable, connectors and associated wiring from REC3 of PCB1 to RHF console.

Repair and/or replace defective component(s), if necessary.

2. TRANSFORMER illuminated:

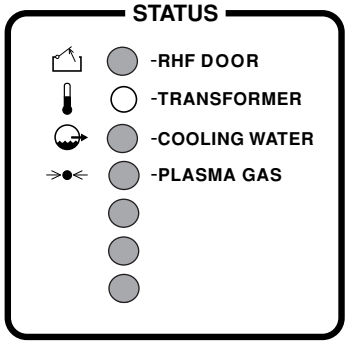

2.1. *Transformer T2 or one of the choppers is overheating.*
This LED will extinguish when the main transformer (T2) is operating in a normal temperature range (under 165° C) and choppers (CH1-4) are also operating in a normal temperature range (under 82° C). Temperature switches are connected in series and will open and illuminate LED when transformer overheats or if any of the choppers overheat.

- Check temperature switches (normally closed).
- Check pins, connectors and associated wiring to temperature switches.
- Leave the fans running, and try restarting the unit after one hour. If LED still illuminates, one of the choppers or the main transformer may need to be replaced.

Problem

Possible Causes and Solutions

3. COOLING WATER illuminated:

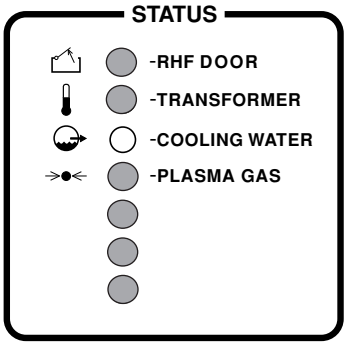

3.1. *Coolant flow too slow.*
This LED will extinguish when flowswitch FS1 in the RHF console closes after sensing a coolant flow of at least **1.25 gpm (4.7 l/m)**.

- Verify that the water chiller is plugged in and is ON.
- Verify that the water supply is connected to the water chiller and is ON.
- Verify that there are no leaks from the water chiller to the RHF console to the torch.

3.2. *Flow switch FS1 in RHF console not functioning.*

- Check cable, and wiring from REC3 of PCB1 to pins 7&8 of RHF console cable connector for continuity.
- If wiring is OK and inlet coolant flow is OK, FS1 may need to be replaced.

Repair and/or replace defective component(s), if necessary.

4. PLASMA GAS illuminated:

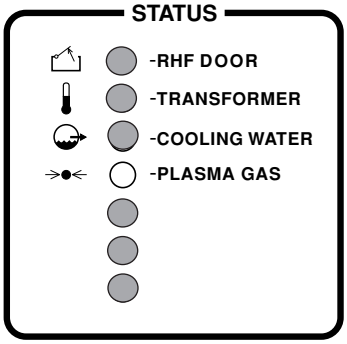

4.1. *Plasma gas pressure too low.*
This LED will extinguish when PS1 and PS2 (in O_2 mode) or PS1 (in N_2 mode) close after sensing plasma gas pressure of at least **80 psi (5.5 bar)**.

- Verify that incoming plasma gas pressure is **120 psi (8.2 bar)** for O_2 and **150 psi (10.3 bar)** for N_2.
- Check for gas leaks or loose gas connections if pressure is inadequate.

4.2. *PS1 and/or PS2 in gas console not functioning.*

- Check wiring, cables and connectors from REC3 of PCB1 to pins 14&15 of gas console cable receptacle.

  If wiring is OK, and inlet gas pressure is OK, PS1 and/or PS2 may need to be replaced.

Repair and/or replace defective component(s), if necessary.

Chopper Module Test Procedure

Note: Take voltages with a digital multimeter (DVM) capable of storing min. and max. readings.

WARNING

SHOCK HAZARD: Use extreme care when working near the chopper modules. The large electrolytic capacitor(s) (blue-cased cylinder(s)) store large amounts of energy in the form of electric voltage. Even if the power is off, dangerous voltages exist at the capacitor terminals, on the chopper, and the diode heatsinks. Never discharge the capacitor(s) with a screwdriver or other implement … explosion, property damage and/or personal injury will result.

1. Turn all power to the HT4001 system OFF.
   Disconnect two terminals on line filter to disable the high frequency transformer T1. See Figure 7-8 for location of T1.
   Note: RHF console doors must be re-shut before attempting to start system.

2. Remove large fuses F1, F2, F3 and F4. Check to see if fuse(s) is (are) open.

3. Place the positive lead of the DVM to the **+** side of the bridge and the negative lead to the **–** side of the bridge. See Figure 6-3. Note that actual connection points are hidden by cap support bracket in Figure 6-3.

4. Turn power to the HT4001 ON, and start system up. After the START command has been given, check voltage. The input to the chopper at these points should be about +360 VDC. If the input is OK and corresponding fuse F1, F2, F3 or F4 is blown, replace the chopper module. If there is no +360 VDC input, check the 3ϕ AC input to the chopper. Also, check contactors (CON1, CON2), contacts, and connections and associated wiring to the contactor. See *Routine Maintenance – Power Supplies* in this section to inspect and replace contacts. Repair and/or replace defective component(s) if necessary.

5. If voltage from above step is +360 VDC and corresponding fuse is not blown, check output of choppers.

CH1
- Place the positive lead of the DVM at point (+) WORK on the chopper module (wire #48A) and negative lead at point (-) TORCH (wire #39A). See Figure 6-3.
- Turn the system on and press the START command. After the START command has been given, check the voltage. If the output from these points is +360 VDC, chopper is OK.

CH2
- To check the output of CH2, repeat the above procedure for CH1 but put the positive lead of the DVM at wire #48B and the negative lead at wire #39B.

Before checking output of choppers CH3 and CH4, switch connector PL3.6 with PL3.9 and also switch connector PL3.5 with PL3.7 on analog PCB3. See Figure 6-3A.

CH3: To check the output of CH3, repeat the above procedure for CH1 but put the positive lead of the DVM at wire #48C and the negative lead at wire #39C.

CH4: To check output of CH4, repeat the above procedure for CH1 but put the positive lead of the DVM at wire #48D and the negative lead at wire #39D.

Return analog PCB3 connectors PL3.6, PL3.9, PL3.5 and PL3.7 to their original positions.

6. If a chopper does not output +360 VDC, check to see if LED1 logic power light is illuminated. If LED1 is extinguished, check if 120V is going to JP6. If there is no 120V at JP6, check wiring back to power distribution board. Repair or replace defective component(s), if necessary. Also check to see if LED3 is turning green when enabled (normal condition). If LED1 is illuminated and LED3 is red when enabled (fault condition), then make sure that JP9 is seated properly.

7. If a chopper still does not output +360 VDC after completing these instructions through step 6, there may be a problem with the control signal or the chopper module. The chopper drive signal comes through the analog board PCB3 as an analog level from 0 to +6.2 VDC, which varies the duty cycle and subsequent output current of the chopper. These analog signals are on PCB3 pins 5&6 PL3.9 for CH1, pins 5&6 PL3.5 for CH2, pins 5&6 PL3.6 for CH3, and pins 5&6 PL3.7 for CH4.

   To check choppers in non-transferred mode:

   - Ensure that high frequency is still disabled (see step 1).
   - On analog board PCB3, disconnect PL3.9 from REC9 (to test CH1), or disconnect PL3.5 from REC5 (to test CH2), or disconnect PL3.6 (to test CH3), or disconnect PL3.7 (to test CH4).
   - Place voltmeter across the output of the chopper in test and press the START command.
   - If the voltmeter reads +360 VDC, then there is a problem with either control board PCB2 or analog board PCB3.
   - If the voltmeter reads 0 volts, then replace the chopper module.

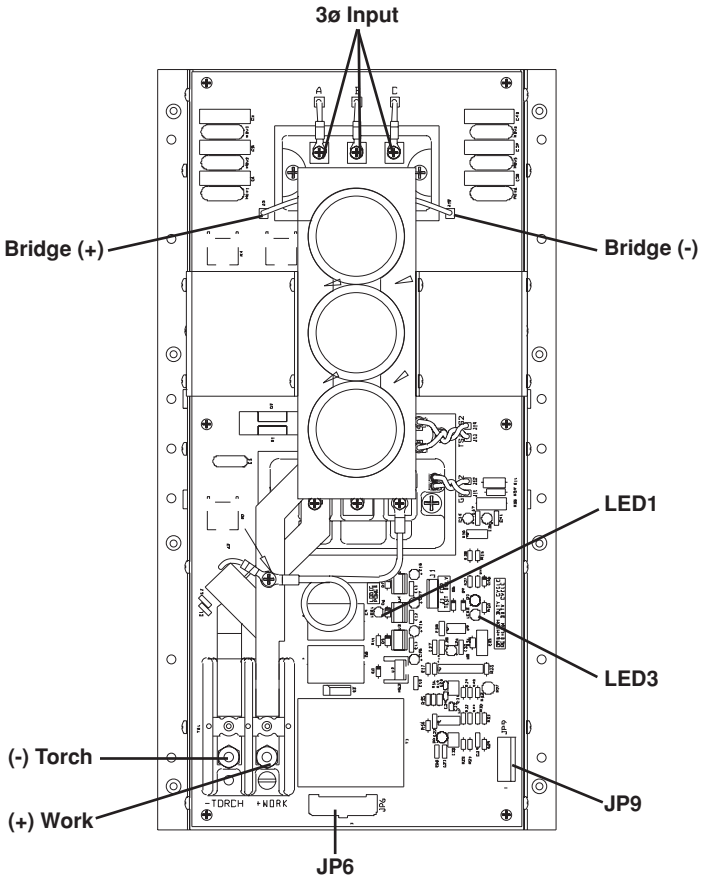

Figure 6-3 Chopper Module – Front View

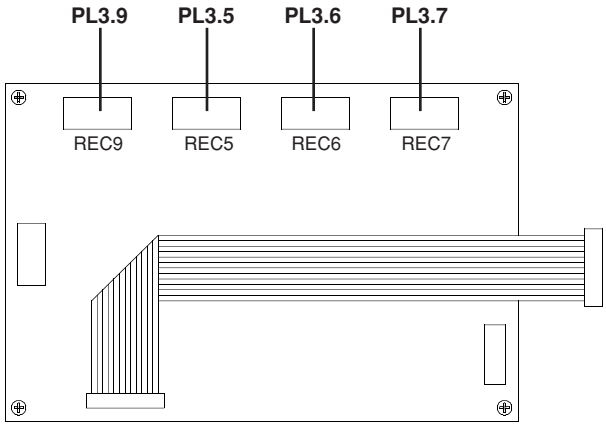

Figure 6-3A Analog PCB3

Relay Board PCB4 Status Indicators

Relay board PCB4 interfaces certain controls in the power supply, gas console, RHF console, and motor valve console to the control board (PCB2). The control board sends a command to the relay board, and the relay board responds by sending 120VAC to the control (and also lighting an LED on the relay board). The control board also tells the relay board to shut off the 120VAC to the particular control (which shuts off the LED). LEDs are located adjacent to the relay that switches the 120VAC. There are also four LEDs indicating on-board conditions.

On the following pages are the LEDs that will light under different modes of operation.

REC2 Pin#	Description	REC3 Pin#	Description	REC4 Pin#	Description
1&2	Slave On	1&2	Plasma Preflow	7&8	LT2: DC ON
5&6	Arc On	3&4	Cutflow	9&10	CON1
		5&6	Plasma N_2/O_2	11&12	Pilot Arc Relay
		7&8	Preflow	13&14	Start Counter
		9&10	Plasma Off	15&16	Error Counter
		11&12	HV Transformer	1&2	Slave 400A
		13&14	RHF Injection Watter	3&4	O_2 Cut Flow
				5&6	Slave 200A

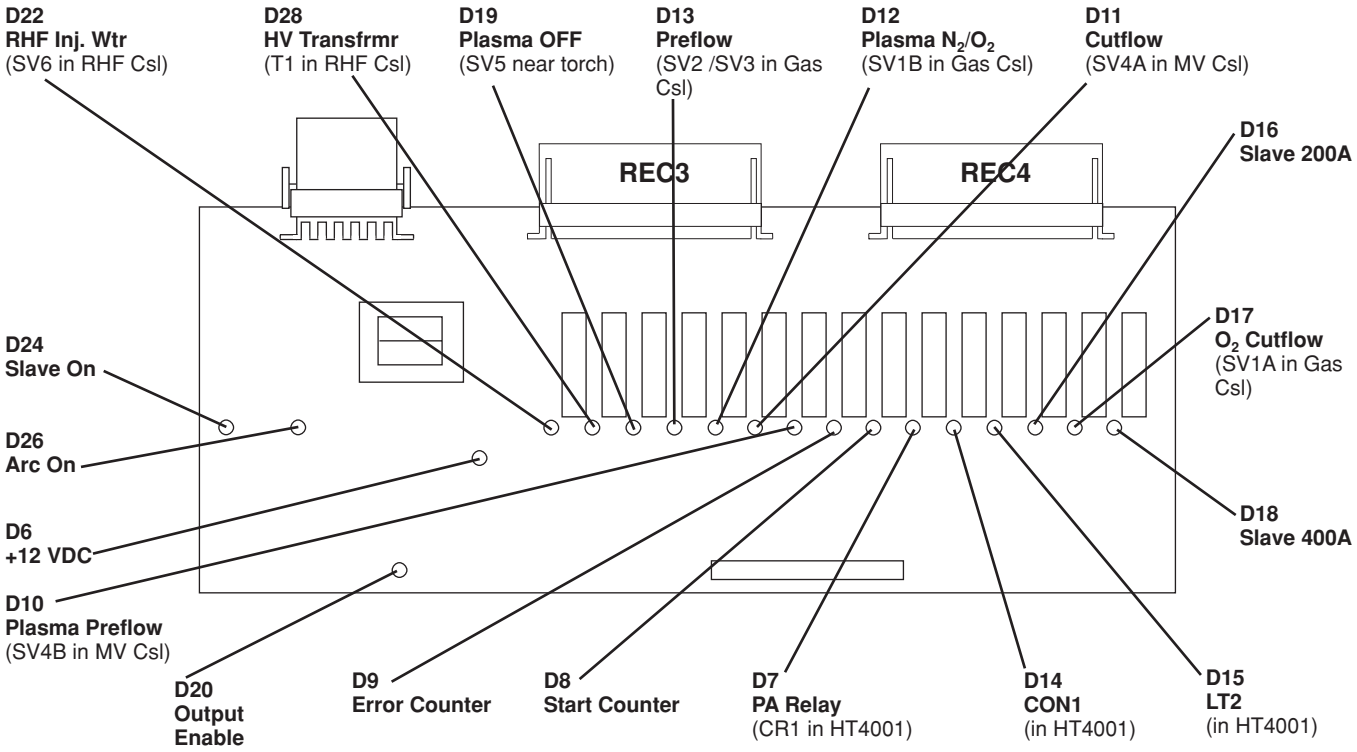

Figure 6-4 Relay Board PCB4 Status Indicators

Note: In all Relay Board Figures, LED ON = ○ LED OFF = ●

Relay Board LED Status
Test Preflow Mode – O_2

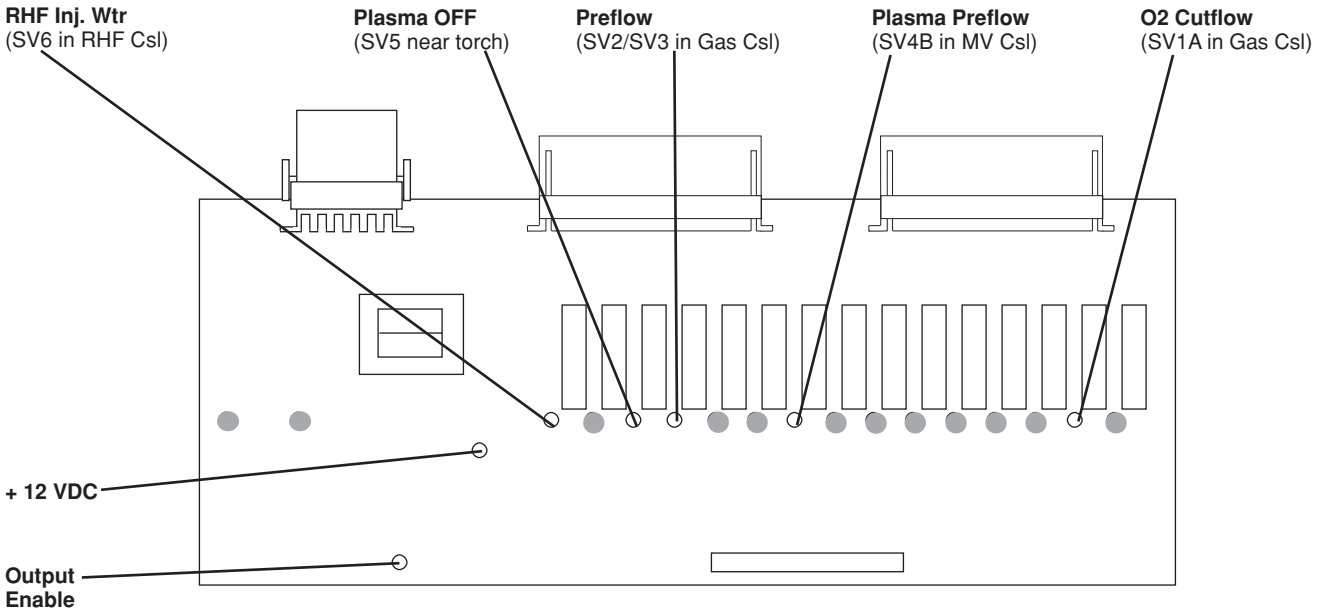

Figure 6-5 Relay Board PCB4 in O_2 Test Preflow

Relay Board LED Status
Test Preflow Mode – N_2

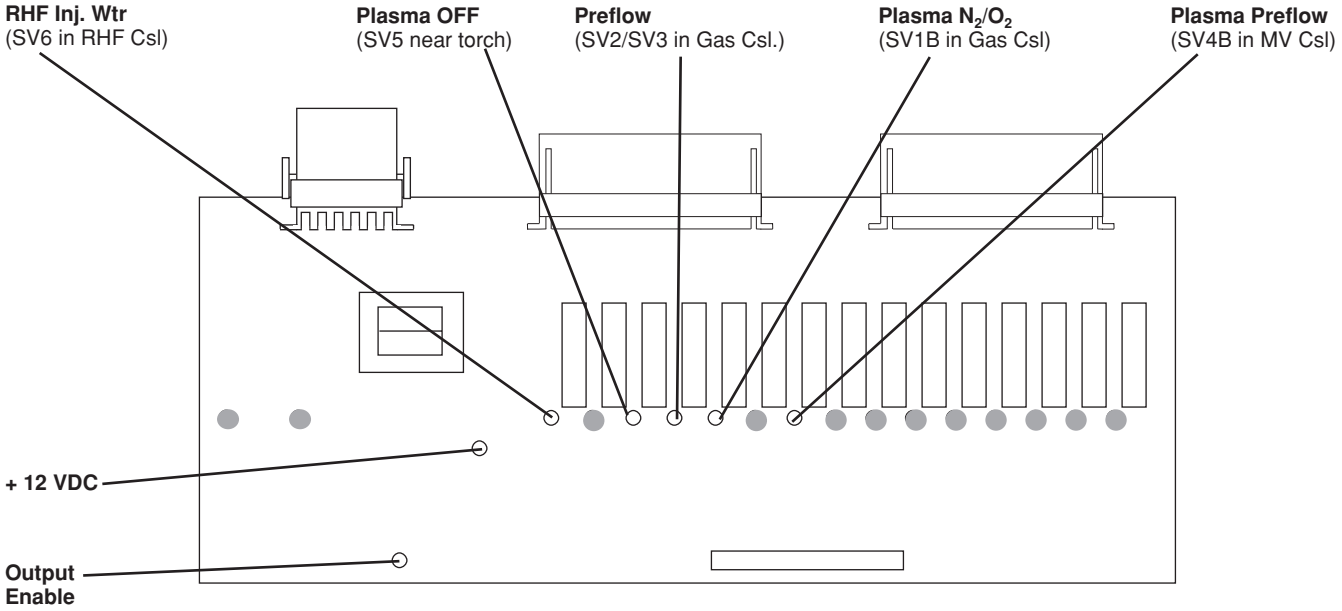

Figure 6-6 Relay Board PCB4 in N_2 Test Preflow

Relay Board LED Status
Test Cut Flow Mode – O_2

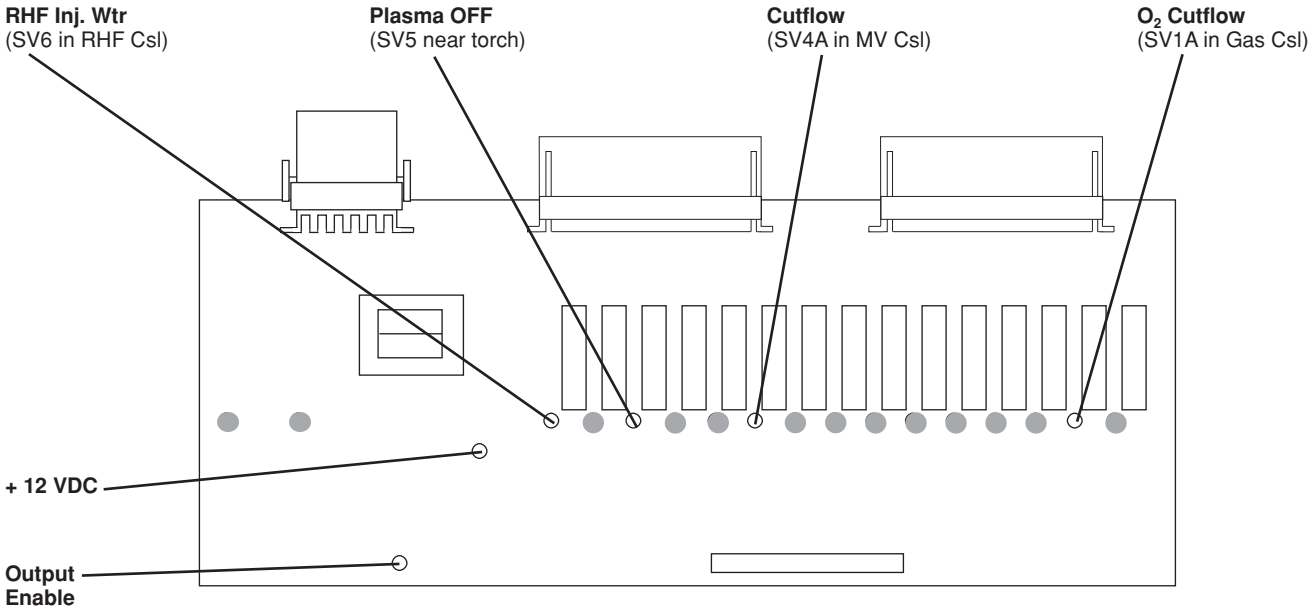

Figure 6-7 Relay Board PCB4 in O_2 Test Cut Flow

Relay Board LED Status
Test Cut Flow Mode – N_2

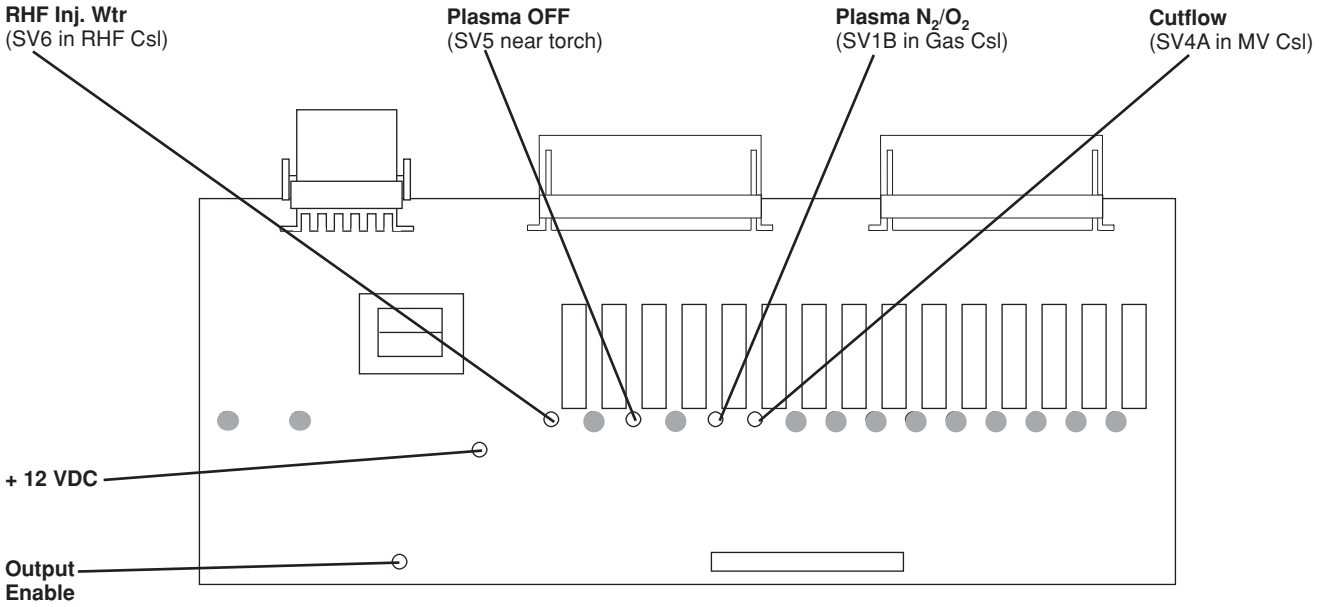

Figure 6-8 Relay Board PCB4 in N_2 Test Cut Flow

Relay Board LED Status
Run Mode – O_2 or N_2

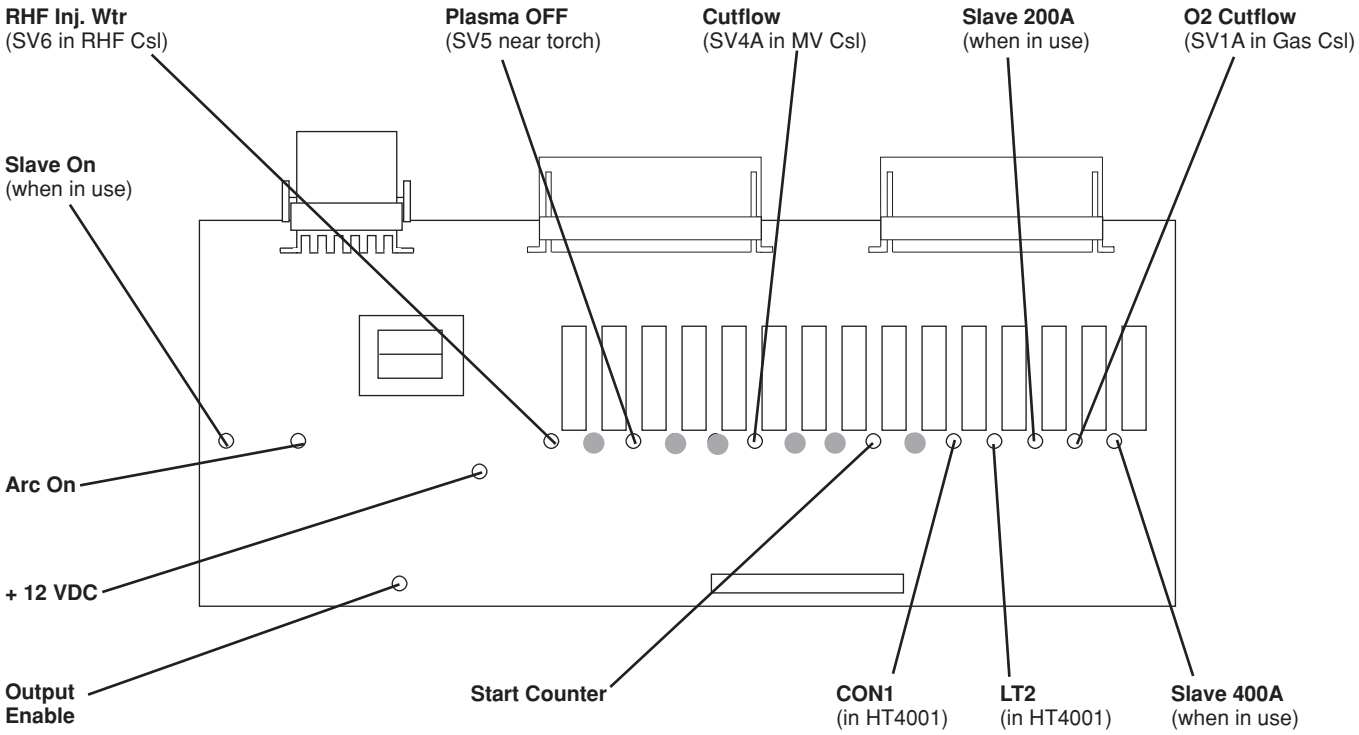

Figure 6-9 Relay Board PCB4 in RUN Mode

Error Codes

The microcontroller on control board PCB2 will alert the user when certain errors occur in the HT4001 system, by flashing the **ERROR CODE** LED on the control board. The power supply front cover must be removed to observe control board PCB2 and the **ERROR CODE** LED (see Figure 7-1 for location of PCB2 and Figure 6-10 for location of **ERROR CODE** LED on PCB2)

The **ERROR CODE** LED will blink on for .5 seconds and off for .5 seconds with a two second gap before repeating the blinking sequence. An explanation of the error codes appears on the following page.

During the error code flashing, all outputs from the control board are turned off, and the power supply is in an idle mode. After the error is corrected, you may resume operation of the system by activating the START signal.

Note: If the **ERROR CODE** LED remains on without blinking, this indicates that a microcontroller internal RAM or ROM self-check error has occurred (power supply will hang up).

For troubleshooting purposes, the **PLASMA START** LED is also shown in Figure 6-10. When lit, this LED indicates that the plasma START command has been received at the control board.

Postflow Gas Control

Disconnected terminals at connector PL2.5 will give the torch 10 seconds of postflow gas.If the terminals are connected together, the torch will have no postflow gas.

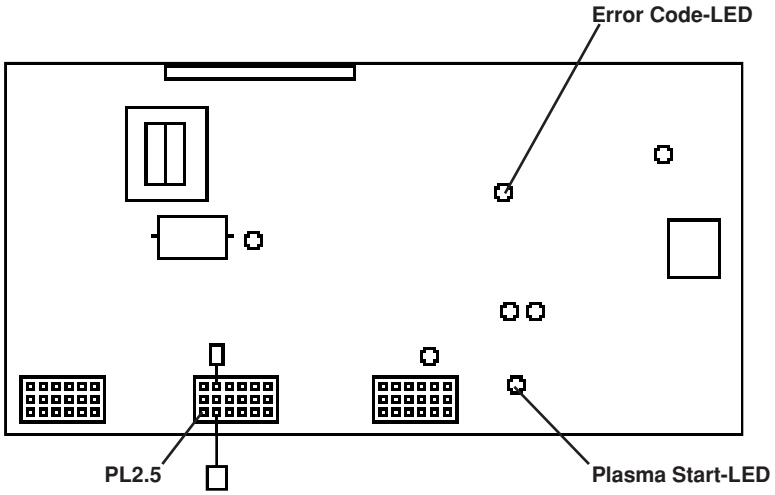

Figure 6-10 HT4001 Control Board Error Code LED Location

Number of blinks	Explanation
1	One blink indicates that the IHS Complete signal has not been returned within 30 seconds after the plasma START command has been given.
2	Two blinks indicates that an “interlock” error has occurred.
3	Three blinks indicates that an interlock failed during plasma cutting.
4	Four blinks indicates that the HOLD input (for multi-torch systems) was not released within 30 seconds after the end of preflow.
5	Five blinks indicates that the transfer of the arc to the workpiece was not sensed within 75 milliseconds of torch ignition.
6	Six blinks indicates that current was lost during ramp up.
7	Seven blinks indicates that current was lost from choppers #1 (CH1) or #2 (CH2).
8	Eight blinks indicates that current was lost from choppers #3 (CH3) or #4 (CH4).
9	Nine blinks indicates that the current was lost during ramp down.
10	Ten blinks indicates that injection water pressure was lost in TEST mode.
11	Eleven blinks indicates that injection water pressure was lost during plasma cutting.
12	Twelve blinks indicates that current from slave was lost.
13	Thirteen blinks indicates that the slave is not connected.
14	Fourteen blinks indicates that there is a software program error.
15	Fifteen blinks indicates that the input voltage has dropped below 15% of the nominal value. Eg: Input voltage for a 480V power supply drops below 408V.

Figure 6-11 HT4001 Error Codes

Torch Coolant Draining

If the torch needs to be changed or transported, follow this procedure for draining the torch coolant from the torch and torch leads.

1. Disconnect all power to the HT4001 system.
2. Disconnect the torch leads from the RHF console, motor valve console and gas console.
3. Ensure that the consumables are installed in the torch.
4. Position the torch lead fittings over a drain or other suitable device to collect coolant.
5. Blow clean, dry, oil-free air at 80-120 psi (5.5-8.3 bar) into the hose with the green band. Coolant will flow out of hose with the red band.

Hypertherm

Section 7

PARTS LIST

In this section:

Introduction 7-2
Finding Part Numbers 7-2
HT4001 Interconnection Reference Map 7-3
HT4001 Power Supply
- Outside Front Panel 7-5
- Inside Front Panel 7-7
- Front Bail 7-9
- Rear Bail 7-11
- Inside Floor 7-13
- Rear Wall Inside 7-15
- Rear Wall Outside 7-17

Remote High Frequency Console 7-19
Gas Console 7-21
Motor Valve Console 7-23
Remote V/C – Digital Remote (DR) Control Module 7-25
Remote V/C – Programmable (PR) Control Module 7-27
IHS Console 7-29
Timer/Counter 7-30
HT4001 Cables, Leads, Torch Leads and Hoses 7-31
PAC620 Machine Torch Assembly 7-41
Torch Mounting Bracket 7-41
Consumable Parts Kits 7-42
- PAC620: HT4001 without Slave, Standard 7-42
- PAC620: HT4001 without Slave, Bevel 7-43
- PAC620: HT4001 with Slave, Standard 7-44
- PAC620: HT4001 with Slave, Bevel 7-45
- PAC620: HT4001 CE without Slave, Standard 7-46
- PAC620: HT4001 CE with Slave, Standard 7-46

Recommended Spare Parts 7-47
- Power Supply 7-47
- Remote High Frequency Console 7-47
- Gas Console 7-47

IHS System and Components 7-48
IHS Leads Packages and Components 7-48

Introduction

The format to list and call out Hypertherm parts is as follows:

Item	Part Number	Description	Designator	Qty.
	029890	**Control Panel SA: HT4001 Pwr Supply**		1
5	001459	Panel: HT4001 Pwr Supply		1
10	**041149**	**PCB Assy:200/4X00/HD Interlock**	**PCB5**	1

Item: Refers to item call out on opposing or same page.
Number (Ex. 5) refers to numbered call out 5 on opposing or same page.

Part: Number Refers to Hypertherm part numbers.
Bold part numbers (Ex. **029890**) signify parent or subassemblies that contain additional items.
Normal-style part numbers (Ex. 001459) signify items under parent subassembly.

Description: Describes the item.
Bold descriptions not indented (Ex. **Control Panel SA:HT4001 Pwr Supply**) signify parent assemblies that contain additional items.

Normal-style part numbers that are indented (Ex.Panel:HT4001 Pwr Supply) signify items under parent or subassembly.

Bold descriptions that are indented (Ex. **PCB Assy:200/4X00/HD interlock**) represent subassemblies that are under a parent assembly.

Designator: Represents a cross reference designation in wiring diagrams.
(Ex. **PCB5** refers to PCB5 shown in wiring diagrams)

Qty.: Refers to the number of items in the parent or subassembly.

Finding Part Numbers

On the following page is an interconnect diagram with reference letters and numbers corresponding to system components, cabling and hosing. Find the system component reference number or letter in the diagram, and find the same reference number or letter in the parts list. Components with many parts (such as the HT4001 power supply) are additionally broken down to major components and subassemblies.

Note:	Reference letter H:	See H-401/H-601 manual (800410)
	Reference letter J:	See Water Chiller manual (800880)
	Reference letter K:	See Water Muffler manual (801730)
	Reference letter L:	See specifications in cutting machine's documentation.

HT4001 Interconnection Reference Map

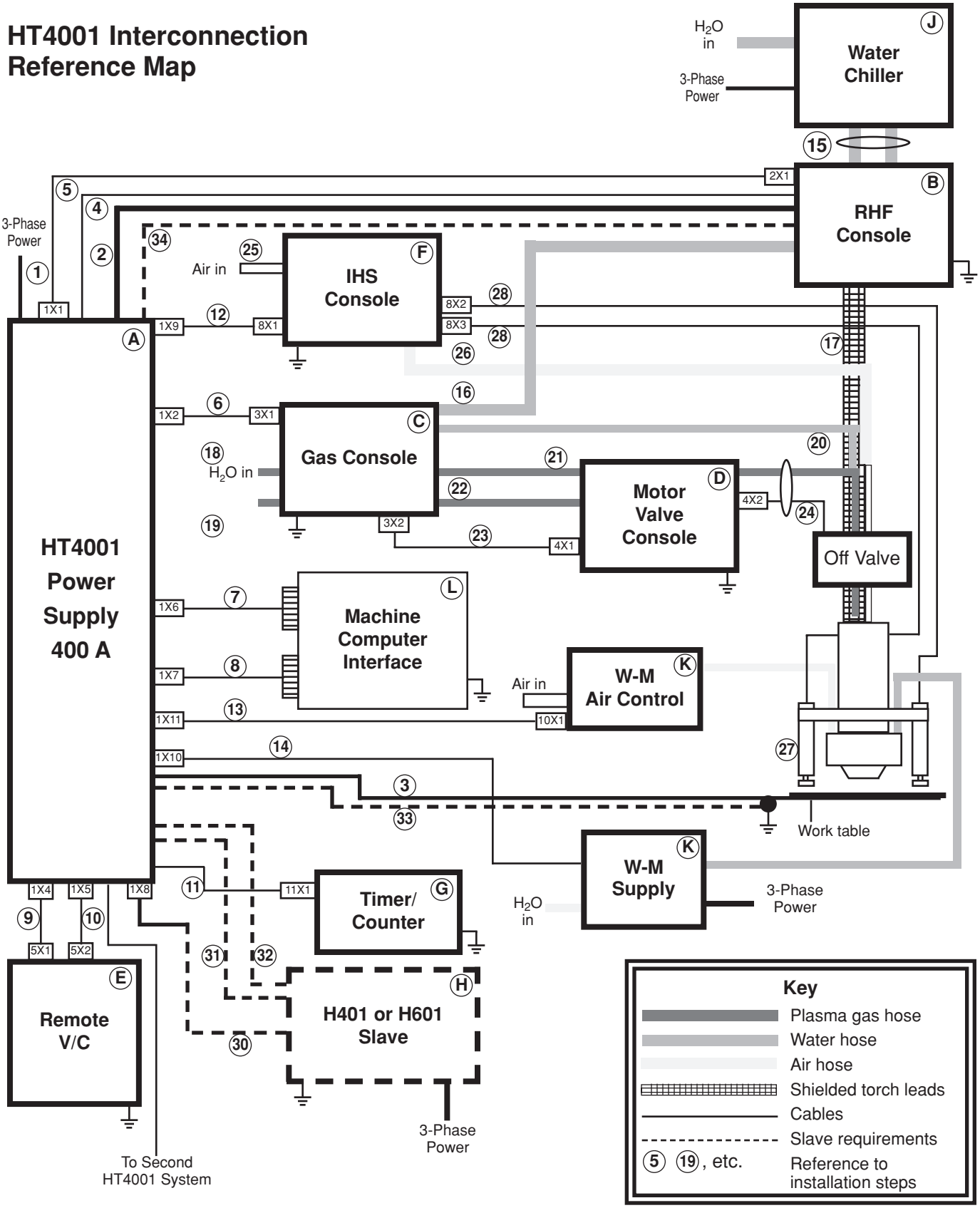

Figure 7-A HT4001 Interconnect Reference Map with IHS, Water Muffler and Slave

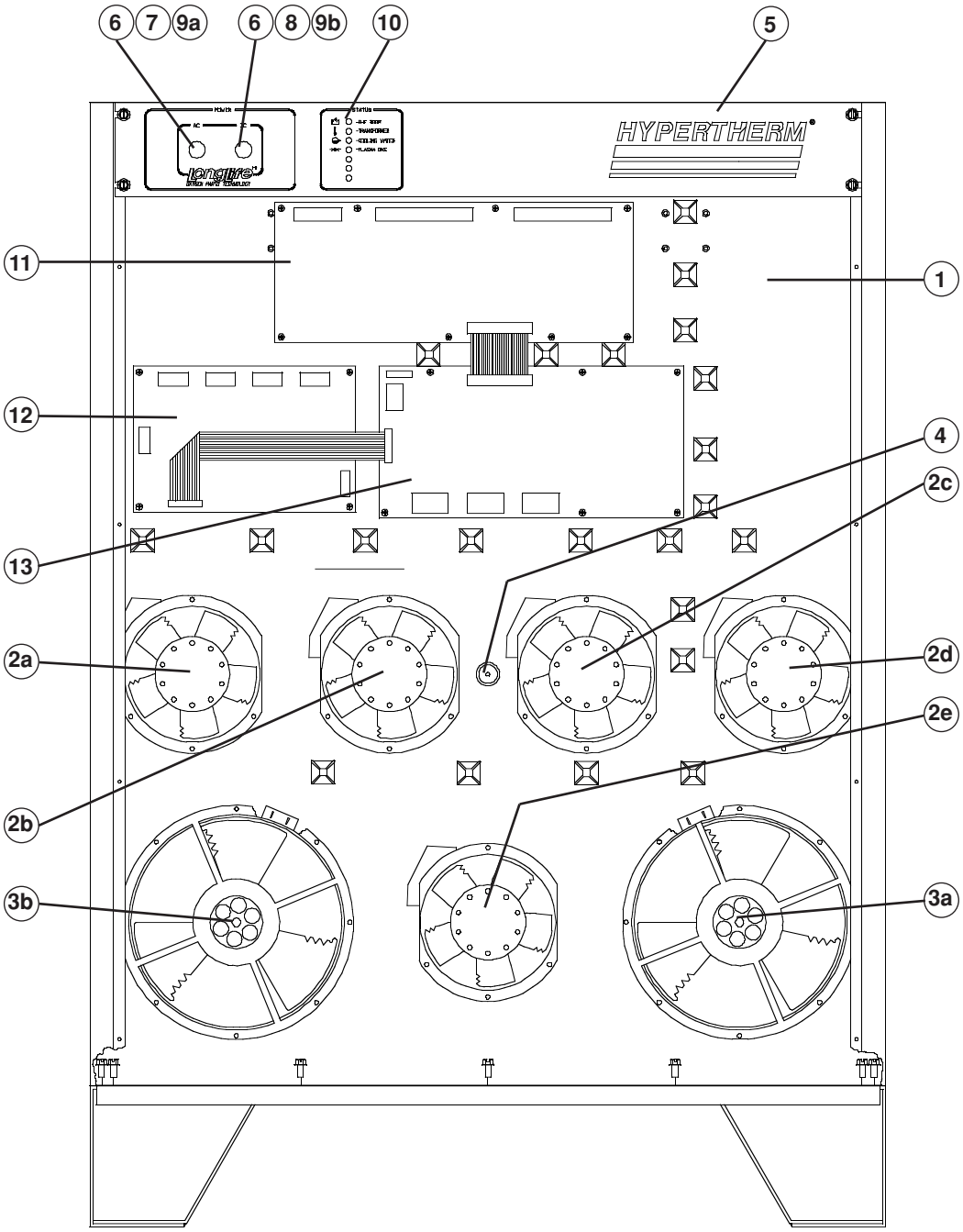

Figure 7-1 HT4001 Power Supply – Outside Front Panel

HT4001 Power Supply Ⓐ : Outside Front Panel

Item	Part Number	Description	Designator	Qty.
1	001451	Panel, HT4001 Power Supply		1
2a	027080	Fan 225 CFM 120VAC 50/60Hz	**M1**	1
2b	027080	Fan 225 CFM 120VAC 50/60Hz	**M2**	1
2c	027080	Fan 225 CFM 120VAC 50/60Hz	**M3**	1
2d	027080	Fan 225 CFM 120VAC 50/60Hz	**M4**	1
2e	027080	Fan 225 CFM 120VAC 50/60Hz	**M6**	1
3a	027079	Fan 450-550 CFM 120VAC 50/60Hz	**M5**	1
3b	027079	Fan 450-550 CFM 120VAC 50/60Hz	**M7**	1
4	004634	Sprt:HT4001 Power Supply Front Panel		1
	029890	**Control Panel SA: HT4001 Pwr Supply**		1
5	001459	Panel: HT4001 Pwr Supply		1
6	005151	Lamp Holder; T2 light bulb		2
7	005177	Lens: Green		1
8	005089	Lens: White		1
9a	005149	Light Bulb: 120VAC T2	**LT1**	1
9b	005149	Light Bulb: 120VAC T2	**LT2**	1
10	**041536**	**PCB Assy:200/4X00/HD Interlock**	**PCB5**	1
11	**041589**	**PCB Assy: 4001 Relay**	**PCB4**	1
	003087	Relay: 12VDC SA NO/NC		3
	003134	Relay: 12-280VAC Out 5A, Solid State		15
12	**041282**	**PCB Assy: HT4001 4-Channel Anlg**	**PCB3**	1
13	**041763**	**PCB Assy: HT4001 Control Board II**	**PCB2**	1

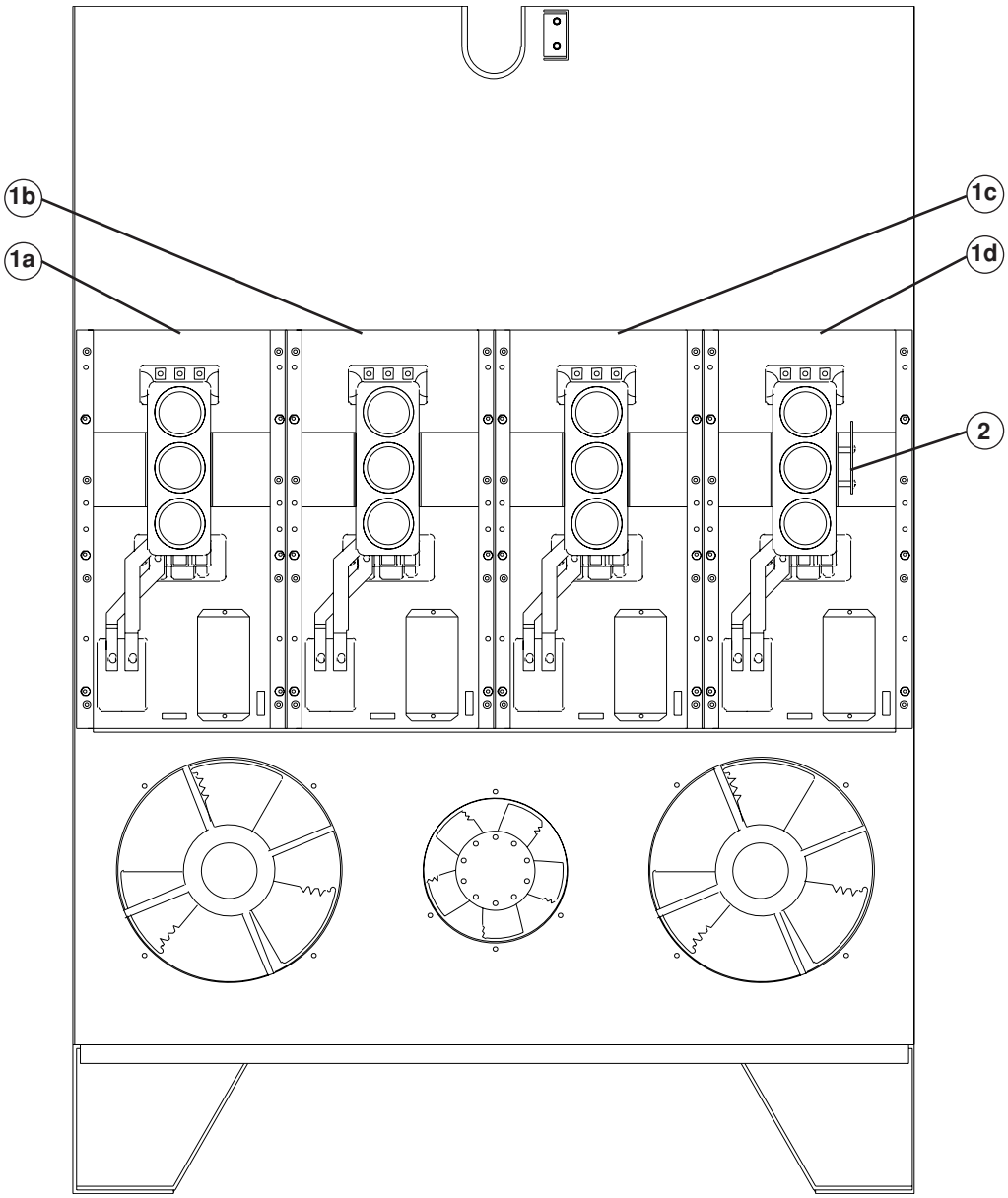

Figure 7-2 HT4001 Power Supply – Inside Front Panel

HT4001 Power Supply Ⓐ – Inside Front Panel

Item	Part Number	Description	Designator	Qty.
1a	129160	CH100-CE/LVD Chopper SA	CH1	1
1b	129160	CH100-CE/LVD Chopper SA	CH2	1
1c	129160	CH100-CE/LVD Chopper SA	CH3	1
1d	129160	CH100-CE/LVD Chopper SA	CH4	1
2	041564	PCB Assembly: Phase Loss Det. Circuit	PCB21	1

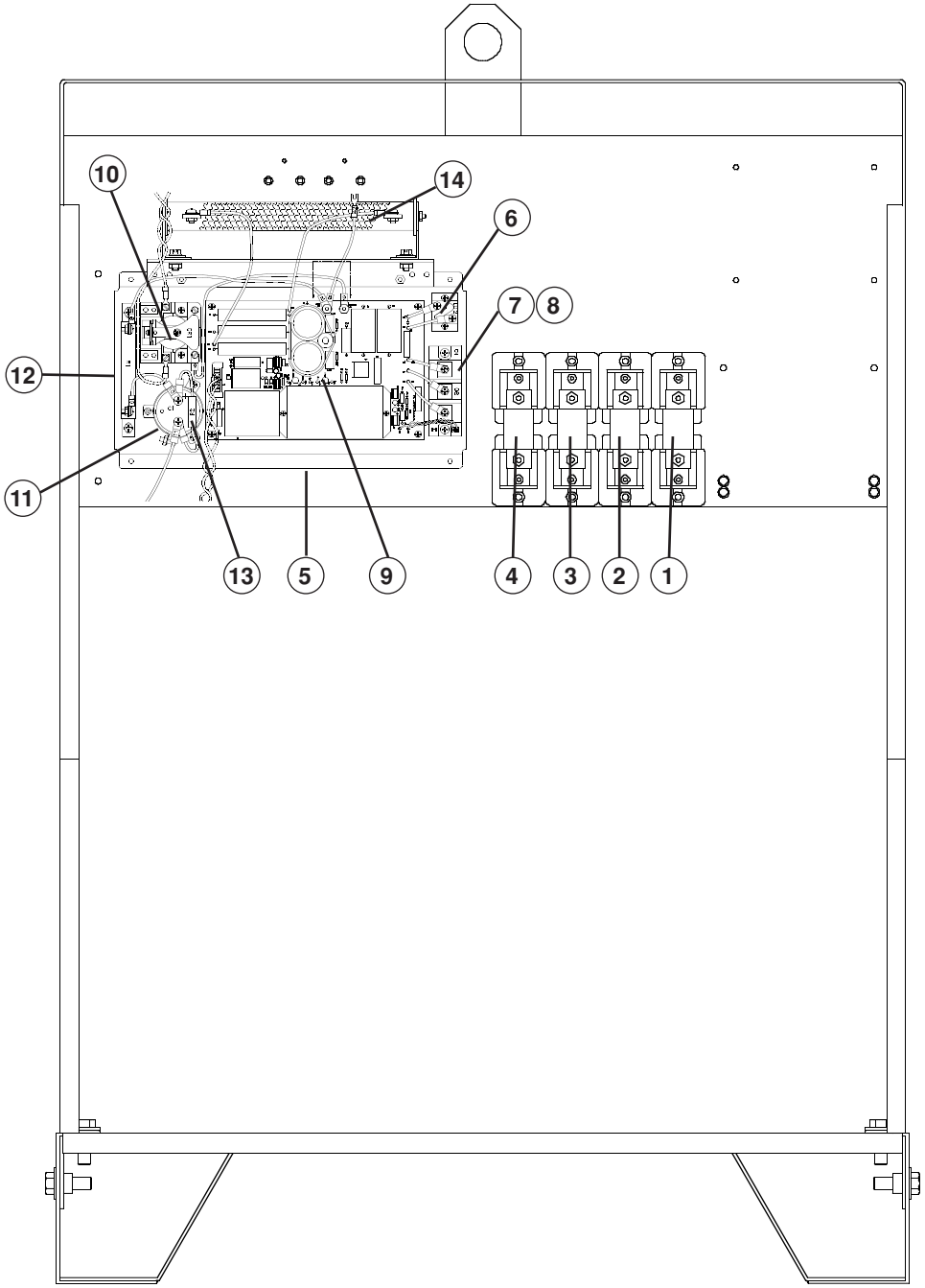

Figure 7-3 HT4001 Power Supply – Front Bail

HT4001 Power Supply Ⓐ – Front Bail (Wall)

Item	Part Number	Description	Designator	Qty.
1	008317	Fuse: 125A 250V	**F1**	1
2	008317	Fuse: 125A 250V	**F2**	1
3	008317	Fuse: 125A 250V	**F3**	1
4	008317	Fuse: 125A 250V	**F4**	1
5	**129349**	**HT4001 Start Circuit SA II**		1
6	009739	Diode:1000V 100A	**D12**	1
7	109798*	Diode:600V 200A Fast IGBTMod	**Q8**	1
8	008905*	Thermal Pad:AL-370-134		1
9	**041585**	**PCB Assy:HT4001 Start Circuit II**	**PCB14**	1
10	003021	Relay:120VAC SPST NO	**CR1**	1
11	009911	Capacitor:510UF	**C1**	1
12	009826	Resistor:4-Ohm 50W	**R1**	1
13	009015	Resistor:10K-Ohm 10W	**R2**	1
14	009877	Resistor: 1-Ohm 500W	R3	1

* Order thermal pad when ordering 009798.

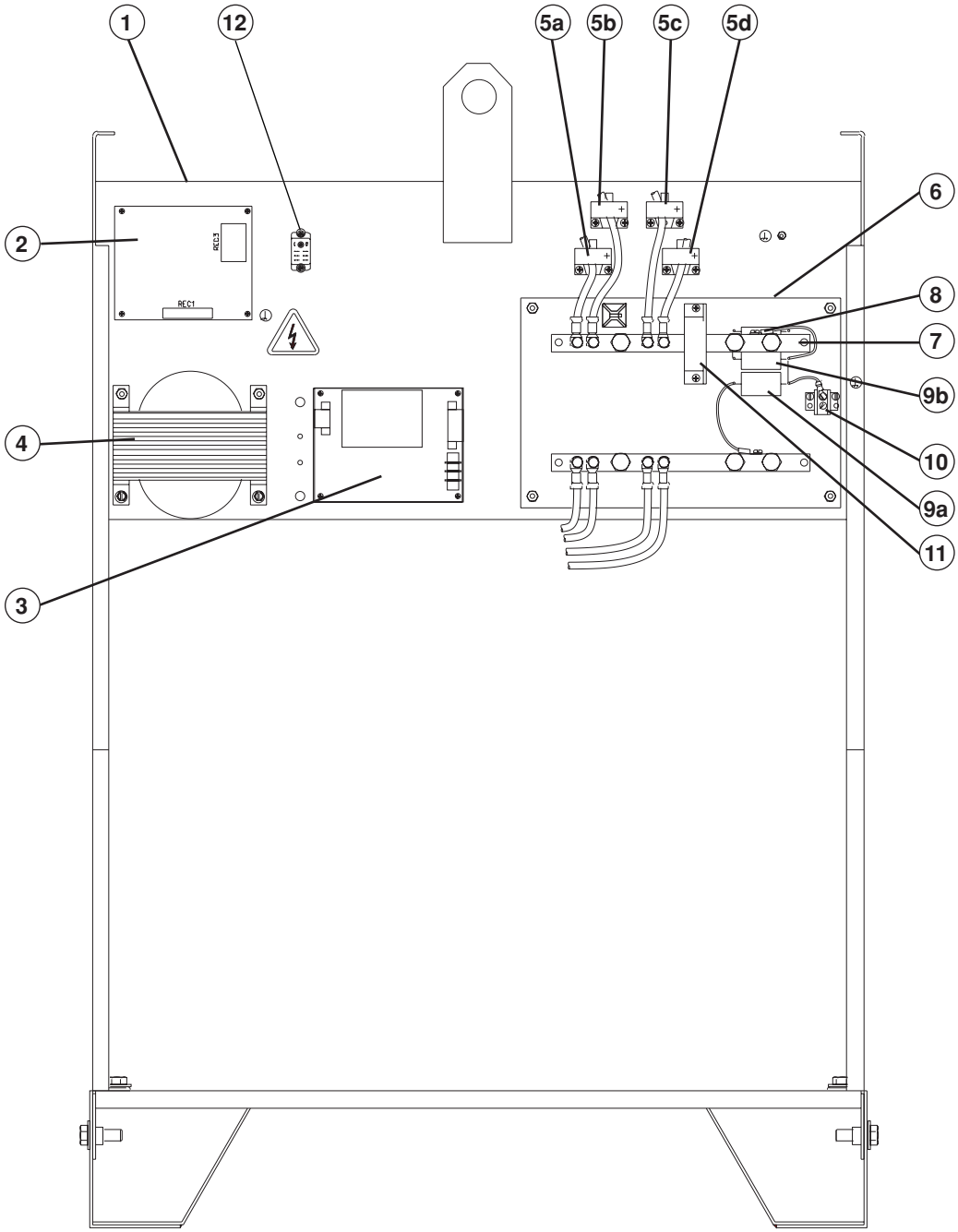

Figure 7-4 HT4001 Power Supply – Rear Bail

HT4001 Power Supply Ⓐ – Rear Bail (Wall)

Item	Part Number	Description	Designator	Qty.
1	001456	Bail: HT4001 Power Supply		1
2	**041534**	**PCB Assy: Power Dist.**	**PCB1**	1
3	**041377**	**PCB Assy: 9251 Iso-Amp**	**PCB11**	1
4	**029903**	**Control Xfrmr SA: 200-220V/50Hz**	**T1**	1
4	**029905**	**Control Xfrmr SA: 240-480V/60Hz**	**T1**	1
4	**029904**	**Control Xfrmr SA: 380-415V/50Hz**	**T1**	1
4	**129304**	**Control Xfrmr SA: 440-480V/50Hz**	**T1**	1
4	**029906**	**Control Xfrmr SA: 575-600V/60Hz**	**T1**	1
5a	109004	Current Sensor: Hall100A=4V	**CS1**	1
5b	109004	Current Sensor: Hall100A=4V	**CS2**	1
5c	109004	Current Sensor: Hall100A=4V	**CS3**	1
5d	109004	Current Sensor: Hall100A=4V	**CS4**	1
6	**029891**	**I/O Panel SA: HT4001 Power Supply**	**PCB10**	1
7	004636	Busbar: HT4001 Power Supply		2
8	009015	Resistor: 10KΩ	**R2**	1
9a	009224	Cap: .22µF 1000V	**C1**	1
9b	009224	Cap: .22µF 1000V	**C3**	1
10	008873	Terminal Board: 1-Term, 2-Row	**TB1**	1
11	109005	Current Sensor: Hall 1000A=4V	**CS5**	1
12	003142	Relay; 120VAC DPDT	CRA	1

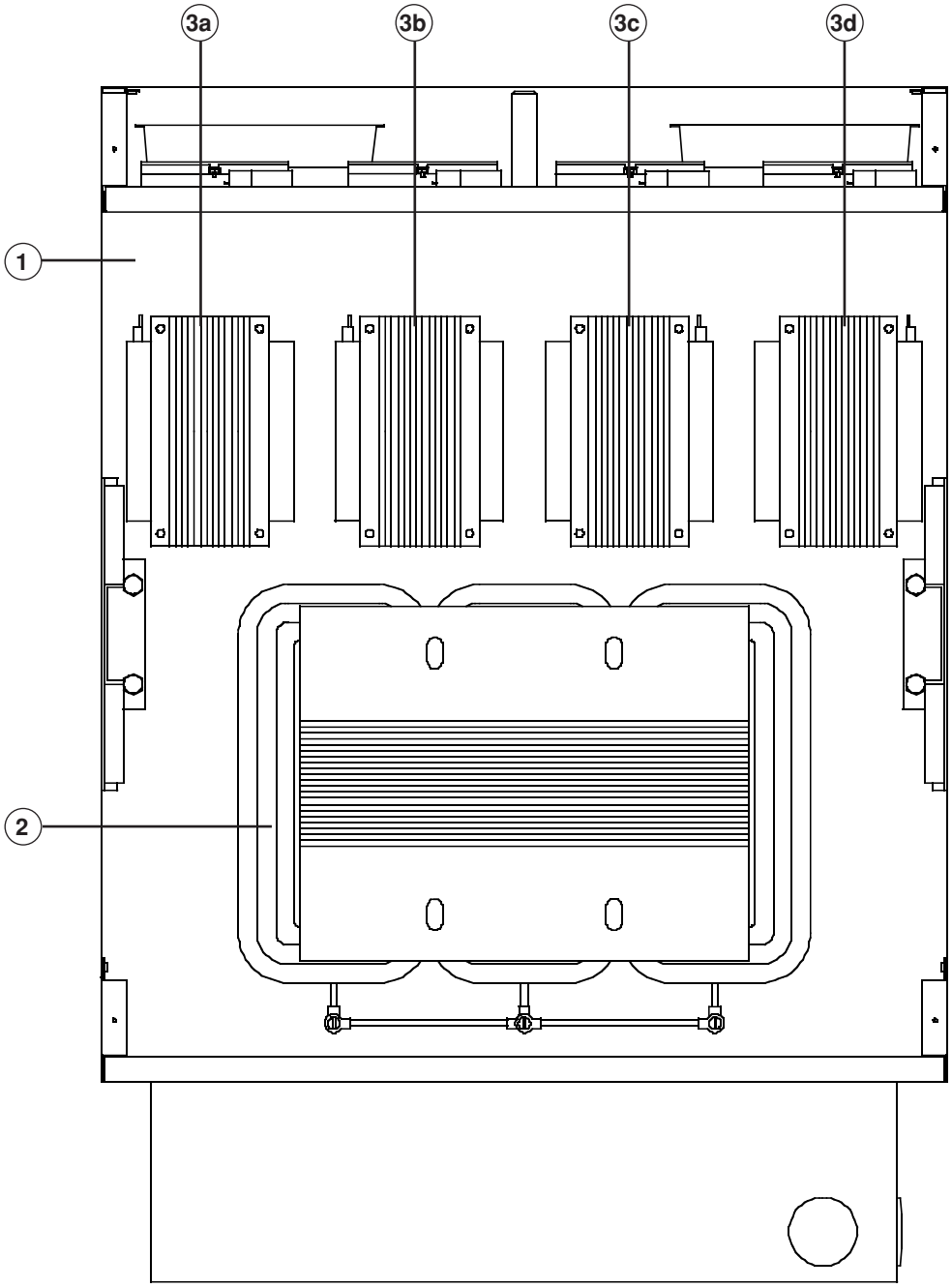

Figure 7-5 HT4001 Power Supply – Inside Floor

HT4001 Power Supply Ⓐ – Inside Floor

Item	Part Number	Description	Designator	Qty.
1	001450	Base: HT4001 Power Suppy		1
2	014173*	Transformer: HT4001 80kW 200/3/50	**T2**	1
2	014172**	Transformer: HT4001 80kW 480/3/60	**T2**	1
2	014174***	Transformer: HT4001 80kW 380-415/3/50	**T2**	1
2	014175****	Transformer: HT4001 80kW 575-600/3/60	**T2**	1
2	014226*****	Transformer: HT4001 80kW 440/480	**T2**	1
3a	014080	Inductor: 200/2000/4000 100A 4mH	**L1**	1
3b	014080	Inductor: 200/2000/4000 100A 4mH	**L2**	1
3c	014080	Inductor: 200/2000/4000 100A 4mH	**L3**	1
3d	014080	Inductor: 200/2000/4000 100A 4mH	**L4**	1

* Used on 200 volt power supply
** Used on 240/480 volt power supplies
*** Used on 380/415 volt power supplies
**** Used on 575/600 volt power supplies
***** Used on 440/480 volt power supplies

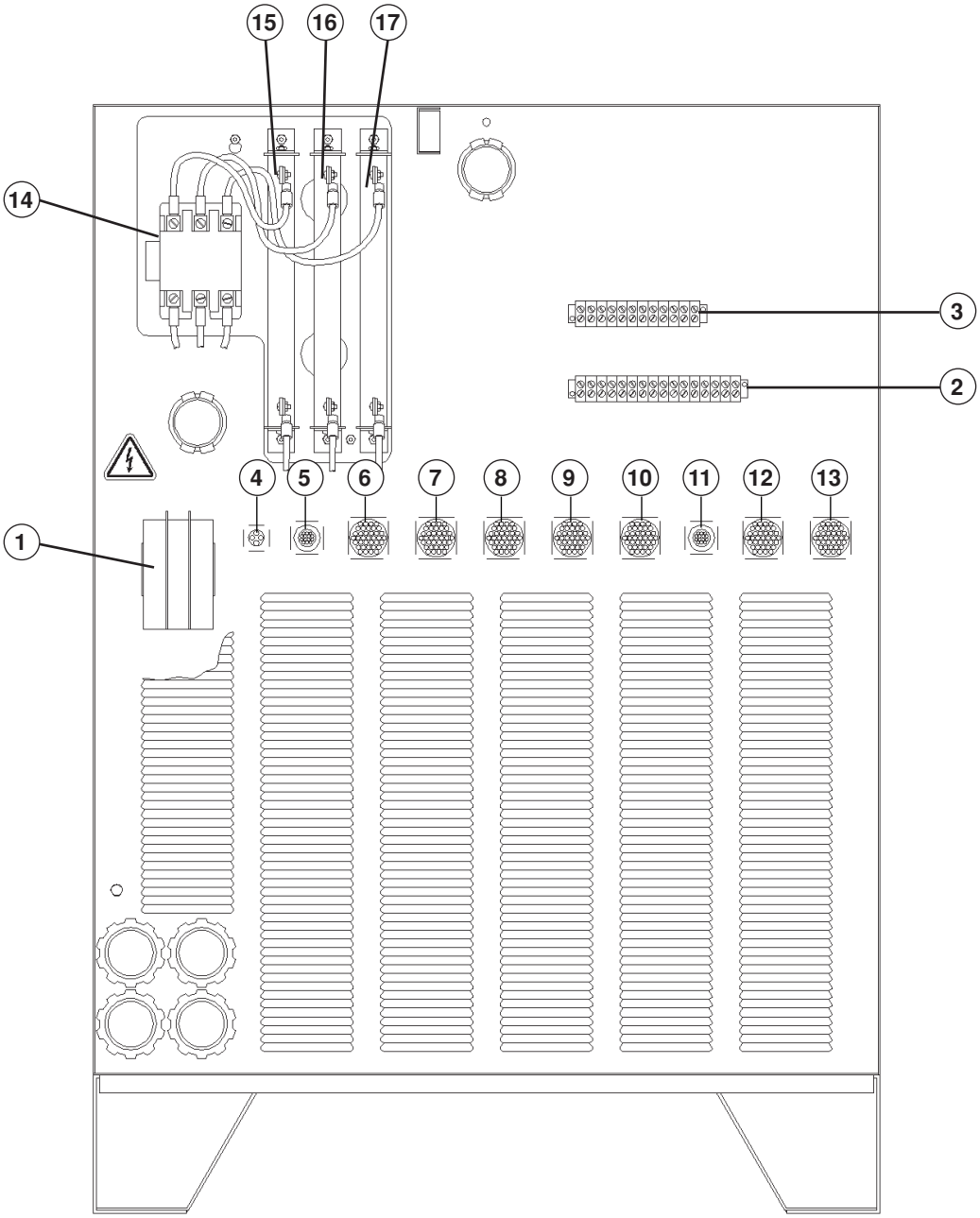

Figure 7-6 HT4001 Power Supply – Rear Wall Inside

HT4001 Power Supply Ⓐ : Rear Wall Inside

Item	Part Number	Description	Designator	Qty.
1	003152	Circuit Breaker: 3 P, 5A 600V 24V-TC	**CB1**	1
	029887	**Harness: HT4001 Power Supply**		1
2	008073	Terminal Board: 16-Term	**TB3**	1
3	008079	Terminal Board: 12-Term	**TB4**	1
4	008210	Receptacle Shell: CPC 11-4 Rvs Sex	**1X10**	1
5	008201	Receptacle Shell: CPC 17-14 Rvs Sex	**1X9**	1
6	008447	Receptacle Shell: CPC 23-37 Std Sex	**1X8**	1
7	008208	Receptacle Shell: CPC 23-37 Rvs Sex	**1X7**	1
8	008208	Receptacle Shell: CPC 23-37 Rvs Sex	**1X6**	1
9	008208	Receptacle Shell: CPC 23-37 Rvs Sex	**1X5**	1
10	008208	Receptacle Shell: CPC 23-37 Rvs Sex	**1X4**	1
11	008201	Receptacle Shell: CPC 17-4 Rvs Sex	**1X3**	1
12	008208	Receptacle Shell: CPC 23-37 Rvs Sex	**1X2**	1
13	008447	Receptacle Shell: CPC 23-37 Std Sex	**1X1**	1
	008176	Pin:24-20 AWG Type III + CRP		126
	008186	Socket: 24-20 AWG Type III + CRP		136
	008203	Socket: 18-16 AWG Type III + CRP		10
	008205	Pin: 18-16 AWG Type III + CRP		4
	129350*	**Chassis SA:HT4001 In Rush 200V**		
	129328	**Chassis SA:HT4001 In Rush**		
14	003139	Contactor:90A 3P 120VAC	**CON2**	1
15	009625	Resistor:2.0-Ohm 395W	**R1**	1
16	009625	Resistor:2.0-Ohm 395W	**R2**	1
17	009625	Resistor:2.0-Ohm 395W	**R3**	1

* Used only with 200V power supplies 077002 and 077016

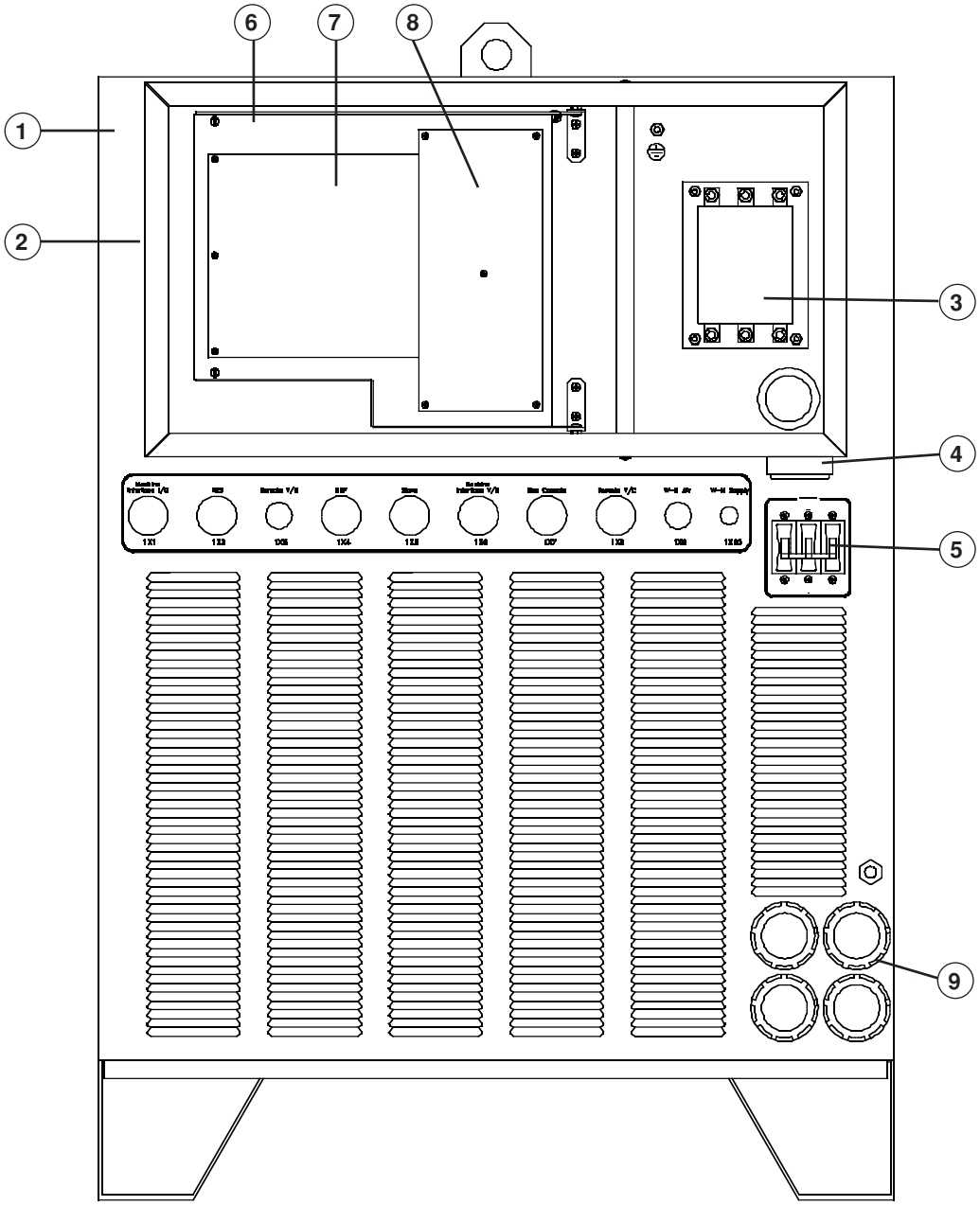

Figure 7-7 HT4001 Power Supply – Rear Wall Outside

HT4001 Power Supply Ⓐ : Rear Wall Outside

Item	Part Number	Description	Designator	Qty.
1	001452	Panel, HT4001 Power Supply Rear		1
2	001457	Enclosure: HT4001 Contactor		1
3	003217	Contactor: 185A 3ph 120VAC Coil	**CON1**	1
3**	003218	Contactor: 265A 3ph 120VAC Coil	**CON1**	1
4	008052	Strain relief: 2" NPT Basket		1
5	003152	Circuit Breaker: 3 P 5A 600V 24V-TC	**CB1**	1
6*	**029889**	**HT4001 THC Module**		1
7*	**041358**	**PCB Assy: HT4001 750A THC**	**PCB13**	1
8*	**041359**	**PCB Assy: HT4001 Mthr Bd**	**PCB12**	1
9	008147	Bushing: 2" I.D. X 2" NPT Insul		4

* Not in power supplies ordered w/o THC
** Used in 077002 and 077016 200VAC power supplies only

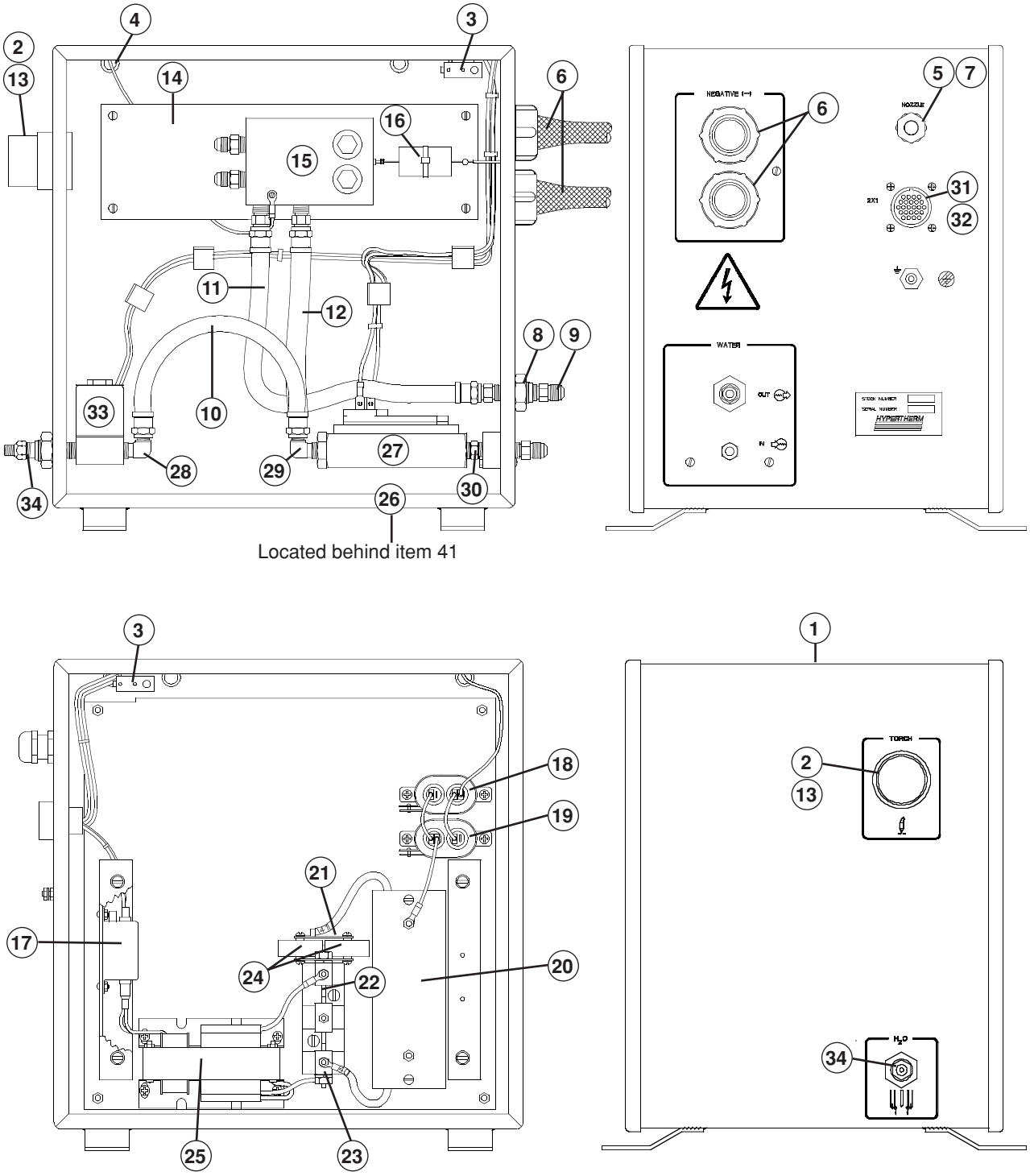

Figure 7-8 Remote High Frequency Console

Remote High Frequency Console Ⓑ (077010)

Item	Part Number	Description	Designator	Qty.
	077010	**HT4001 RHF Console**		
1	001466	Encl: HT4001 RHF CSL		1
2	004078	Shld Adptr:200/400/500/HD1070		1
3	005100	Switch, Door Interlock	**S1, S2**	2
4	008082	Bshg: 1/2 ID X 5/8 Hole		3
5	008212	Strainrlf: 1/2NPT X .197-.354		1
6	008482	Strainrlf, 1-1/4 NPS Basket		2
7	008643	Locknut, 1/2" NPT		1
8	015001	Adapter, Bulkhead, 1/4 NPTF		2
9	015012	Adapter, 1/4 NPT X #6		3
10	**024040**	**Hose Assy, #4 X 12"**		1
11	**024111**	**Hose Assy, #6 X 13"**		1
12	**024256**	**Hose Assy, #6 X 6-1/2"**		1
13	027014	Lockwasher, 1-3/4" internal star		1
	029641	**Neg Bus SA**		1
14	002135	Pnl: Neg Bus		1
15	004074	Blk: 200/400/500 Cath Neg Bus		1
16	009224	Cap, Pol .22 µF 1000 WVDC 10%		1
	129041	**Hi Frequency Panel SA**		
17	009040	Filter, AC, 3 Amp 3WI	**FL1**	1
18	009246	Cap, Poly-Paper .5µF 2500V	**C4A**	1
19	009246	Cap, Poly-Paper .5µF 2500V	**C4B**	1
20	**009320**	**Inductor, Hi Freq Coil**	**T2**	1
	009350	**Spark Gap Assy**	**SG1**	1
21	004144	Bar:009350 Spk Gap Cap Mtg		1
22	004061	Electd: Spk Gap 1/8 X 1.6		3
23	004140	Base:40/100/200/HD Spk Gap		1
24	009280	Cap: .002µF 15 kv	**C5A,C5B**	2
25	**029902**	**High Voltage Transformer SA**	**T1**	1
	014021	Transformer, 5000VAC 20ma		1
	029658	**Manf SA HT4000 RHF Csl Flsw**		1
26	005140	Flsw:1.20 GPM SPST 1/4 NPT	**FS1**	1
27	005139	Flsw: 0.25 GPM SPST 1/4 NPT	**FS2**	1
28	015014	Adapter 90, 1/4 NPT x #4		1
29	015015	Adapter 90, 1/4 NPT X #6		1
30	015510	Nipple 1/4 X Cl, Hex		2
	029882	**Harn: HT4001 RHF Csl**		1
31	008193	Rcpt Shell: CPC 17-16 Std Sex	**2X1**	1
32	008205	Pin: 18-16 AWG Type III		12
33	006031	Sol Valve:350# 1/4 FPT 120V NC	**SV6**	1
34	015047	Adapt, 1/4 MNPT X ACC "A" /LH		1

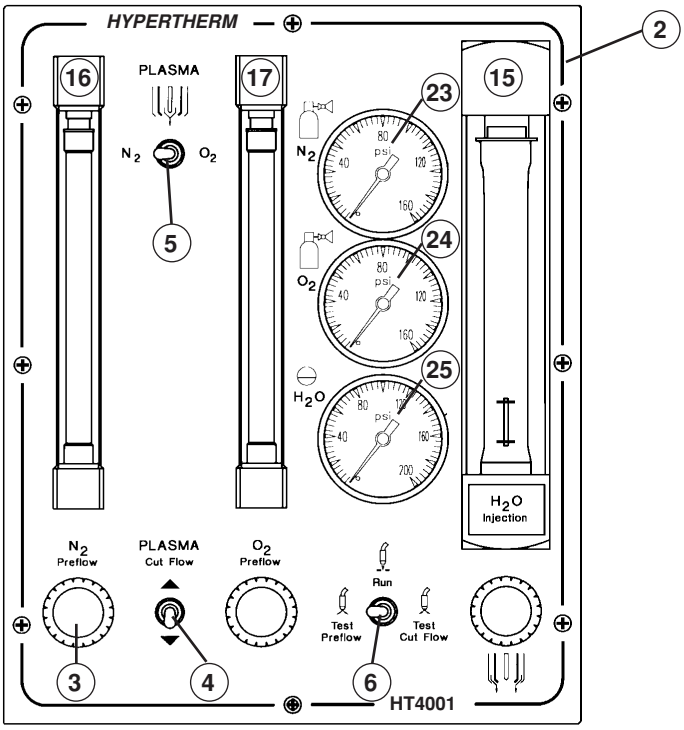

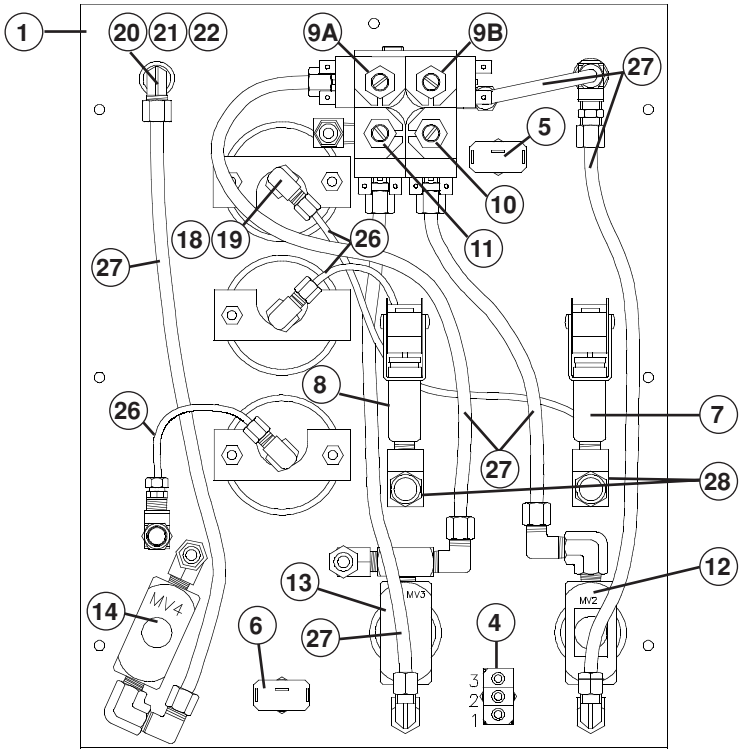

Figure 7-9 Gas Console

Gas Console © (073216)

Item	Part Number	Description	Designator	Qty.
	073216	**HT4001 Gas Console III**		
1	001335	Encl: HT400X/2000 Gas Csl		1
	129089	**Front Pnl SA HT4001 Gas Csl III**		1
2	001463	Pnl:HT4000 Gas Cnsl II Front		1
3	004117	Cap:Needle Valve		3
4	005042	Tgl Sw: SP MOM ON/OFF/ON	**S3**	1
5	005181	Tgl Sw: DPDT Maint ON/NONE/ON	**S1**	1
6	005180	Tgl Sw: SP3T Maint ON/OFF/ON	**S2**	1
7	005243	PressSw:80 PSI 1/8 NPT	**PS1**	1
8	005243	PressSw:80 PSI 1/8 NPT	**PS2**	1
9A	006109	Sol Valve: 150# Manif 120V 2-Way NC	**SV1A**	1
9B	006109	Sol Valve: 150# Manif 120V 2-Way NC	**SV1B**	1
10	006109	Sol Valve: 150# Manif 120V 2-Way NC	**SV2**	1
11	006109	Sol Valve: 150# Manif 120V 2-Way NC	**SV3**	1
12	006064	Meter Valve:1/8 FPT .125 Orf	**MV2**	1
13	006064	Meter Valve:1/8 FPT .125 Orf	**MV3**	1
14	006064	Meter Valve:1/8 FPT .125 Orf	**MV4**	1
15	011069	Flowmeter:1.9 SCFM/3F9 Flt (No-V)	**FM3**	1
16	011056	Flowmeter:0-10 SC/BT-8 Flt Cal 2%	**FM1**	1
	011057	Flowtube/BT-8 Float:0-10 SC Cal. 2%		1
	011081	Float Stop		1
	011008	Shield, Plastic, 63S0503M0010		1
17	011053	Flowmeter:0-10 SC/BP-8 Flt Cal 2%	**FM2**	1
	011058	Flowtube/BP-8 Float:0-10 SC Cal. 2%		1
	011081	Float Stop		1
	011008	Shield, Plastic, 63S0503M0010		1
18	015135	Insert, 1/8 OD Brass		6
19	015136	Adapter: 1/8 FPT X 1/8 CPRSN 90		3
20	015139	Adapter: 1/4 FPT X 1/4 CPRSN 90		1
21	015608	Sleeve, Delrin 1/4" OD		10
22	015609	Insert Brass 1/4 plastic tube		10
23	022020	Press Gauge:160#/Bar 2" 1/8CBM	**PG1**	1
24	022020	Press Gauge:160#/Bar 2" 1/8CBM	**PG2**	1
25	022024	Press Gauge:200#/Bar 2" 1/8CBM	**PG3**	1
26	046048	Tubing, 1/8 OD Blk Air Brake		1.6ft
27	046078	Tubing, 1/4 OD X .040 Blk Nyl		3.4ft
28	015299*	Filter:.10 Micron 1/8FPT Brass Inline		2
	004717**	Manifold, Gas Console		1
	129165	**Harness:HT4001 III Gas Console**		1
	008208	Rcpt Shell:CPC 23-37 Rvs Sex	**3X1**	1
	008176	Pin:24-20 AWG Type III + CRP		20
	008447	Rcpt Shell:CPC 23-37 Std Sex	**3X2**	1
	008186	Skt:24-20 AWG Type III + CRP		11

* Located behind pressure switches
** Located behind solenoid valves

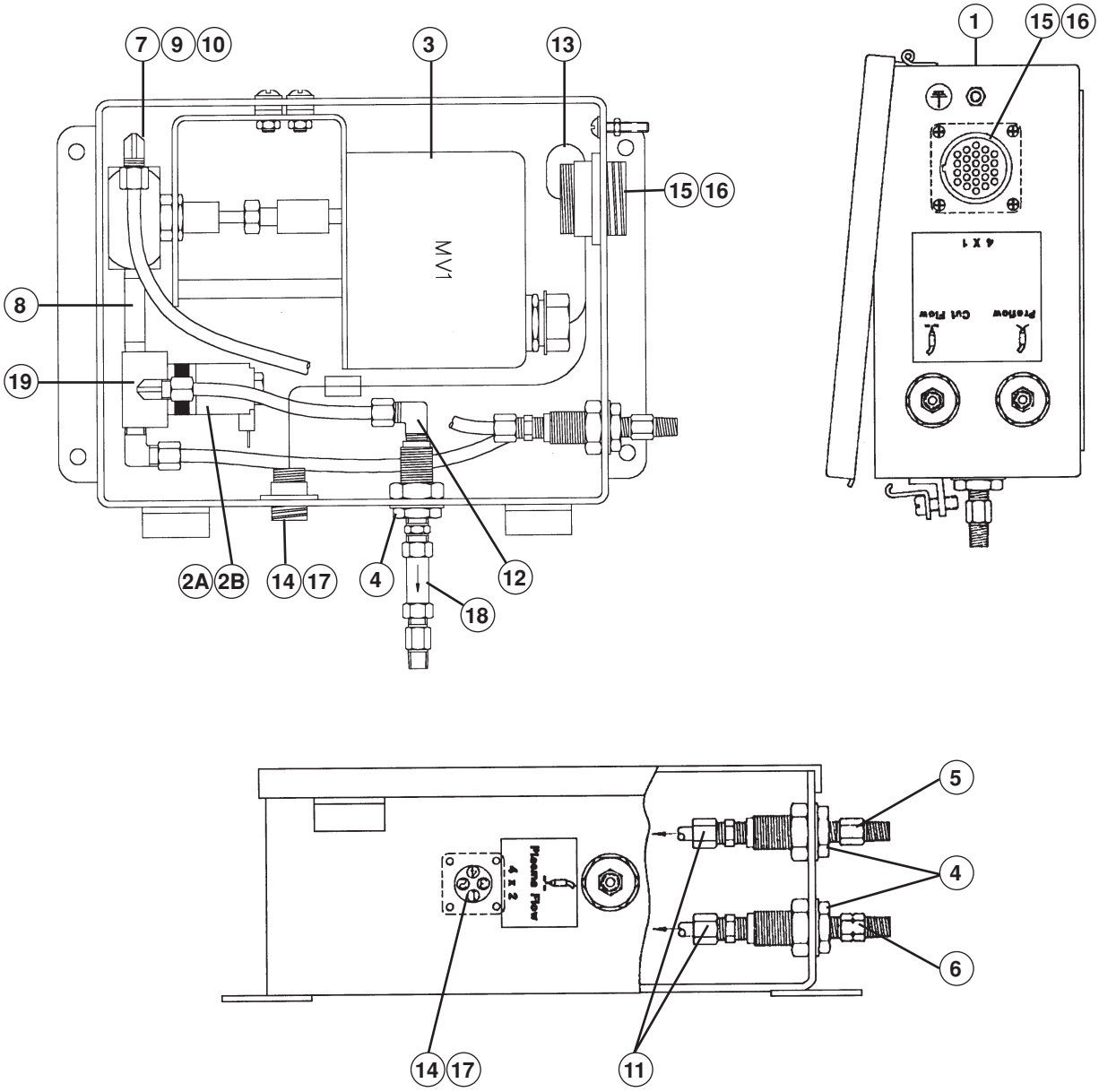

Figure 7-10 Motor Valve Console

Motor Valve Console Ⓓ (073214)

Item	Part Number	Description	Designator	Qty.
	073214	HT4001 Motor Valve Console		
1	002218	Encl: 2000/400X Mtr Valve Csl		1
2A	006109	Sol Valve: 150# Manif 120V 2-Way NC	**SV4A**	1
2B	006109	Sol Valve: 150# Manif 120V 2-Way NC	**SV4B**	1
3	006063	Mtr Valve: Elec 1/8FPT .125 orf	**MV1**	1
4	015050	Adapter, 1/8FPT X 1-1/2		3
5	015116	Adapter, 1/8 NPT X RH 'A'		1
6	015210	Adapter, 1/8 NPT X LH 'A'		1
7	015530	Street Elbow 1/8 90		1
8	015588	Nipple, 1/8 X 2"		1
9	015608	Sleeve, Delrin 1/4" OD		6
10	015609	Insert Brass (1/4 OD)		6
11	015611	Adapter, 1/8NPT X 1/4 CPRSN		2
12	015612	Adapter, 1/8NPT X 1/4 CPRSN 90		3
13	**029759**	**Harn: HT400X Mtr Valve Csl**		**1**
14	008210	Rcpt Shell: CPC 11-4 Rvs Sex	**4X2**	1
15	008447	Receptacle, 23-37, Std Sex CPC	**4X1**	1
	029765	**Wire GP: HT400X Mtr Valve Csl**		**1**
16	008176	Pin: 24-20 AWG Type III + CRP		3
17	008186	Skt: 24-20 AWG Type III + CRP		4
18	015299	Filter:.10Micron 1/8FPT Brass Inline		1
19	004718	Manifold: Motor Valve		1

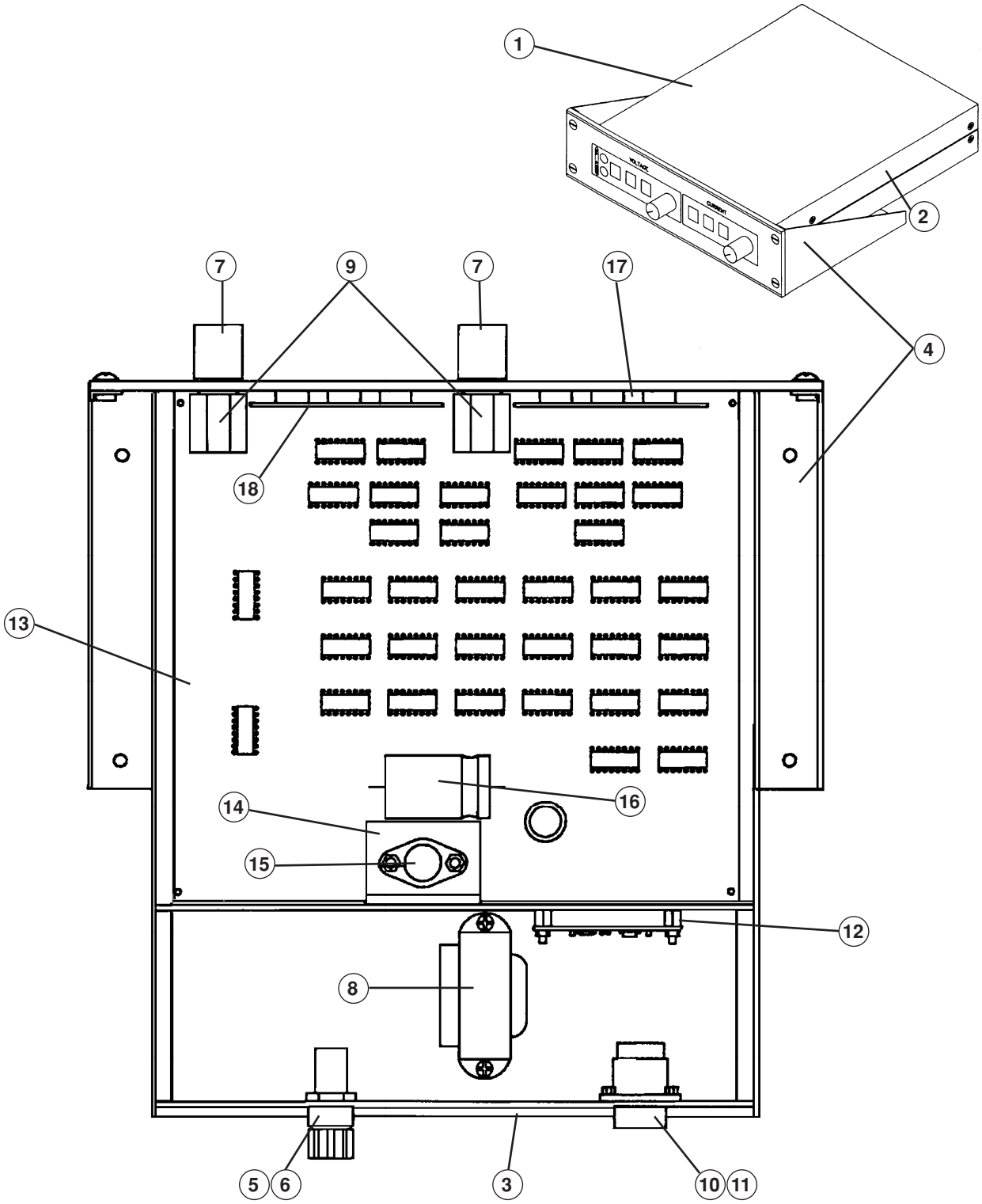

Figure 7-11 Remote V/C – Digital (DR) Control Module

Remote V/C Ⓔ Digital Remote (DR) Control Module (077012)

Item	Part Number	Description	Designator	Qty.
	077012	**Control Module, 750A Digital V/C (DR)**		**1**
1	002107	Cov: DR/PR V/C Top		1
2	002106	Cov: DR/PR V/C Bottom		1
3	002119	Panel, Rear, DR V/C		1
4	004119	Bracket, Mtg, DR/PR V/C		1
5	008069	Fuse, 3/8 Amp 250V 1/4 X 1-1/4 Slow		1
6	008165	Fuseholder, Panel mount 1/4 x 1-1/4		1
7	008164	Knob: .735 Dia. 1/4 Sft Black		2
8	014012	Transf'mer, DR/PR/SR Rmt		1
	029899	**Filter PNL-PCB SA: 077012 RVC**		**1**
9	009871	Potentiometer, 500 Ohm 10 turn		2
10	008175	Receptacle, Shell Size 13-9	**5X1**	1
11	008176	Pin, 20-24 AWG Type III+ CRP		6
	074016	Term 22-18 .250 FEM QC Insul		2
	074038	Term 22-18 FEM QC Insul		5
	074041	Term 22-18 #6 Ring Uninsul		2
	074067	Term 22-18 .25 MAL QC Insul		2
12	**041070**	**PC BD Assy Opto-Iso**		**1**
	008097	Terminal, 1/16 Pnl Swg Mt		4
13	**041370**	**PC BD Assy: 750A DR V/C**		**1**
14	004116	Heatsink, DR/PR SR V/C		1
15	042059	IC: Regulator +5V 1.5A		1
16	009274	Capacitor, 2600 UF 15VDC		1
	008097	Terminal, 1/16 Pnl Swg Mt		11
	008098	Terminal, 1/16 Pnl Prs Mt		9
17	**041076**	**PC BD Assy Rem Volt Disp**		**1**
18	**041077**	**PC BD Assy Rem Curr Disp**		**1**

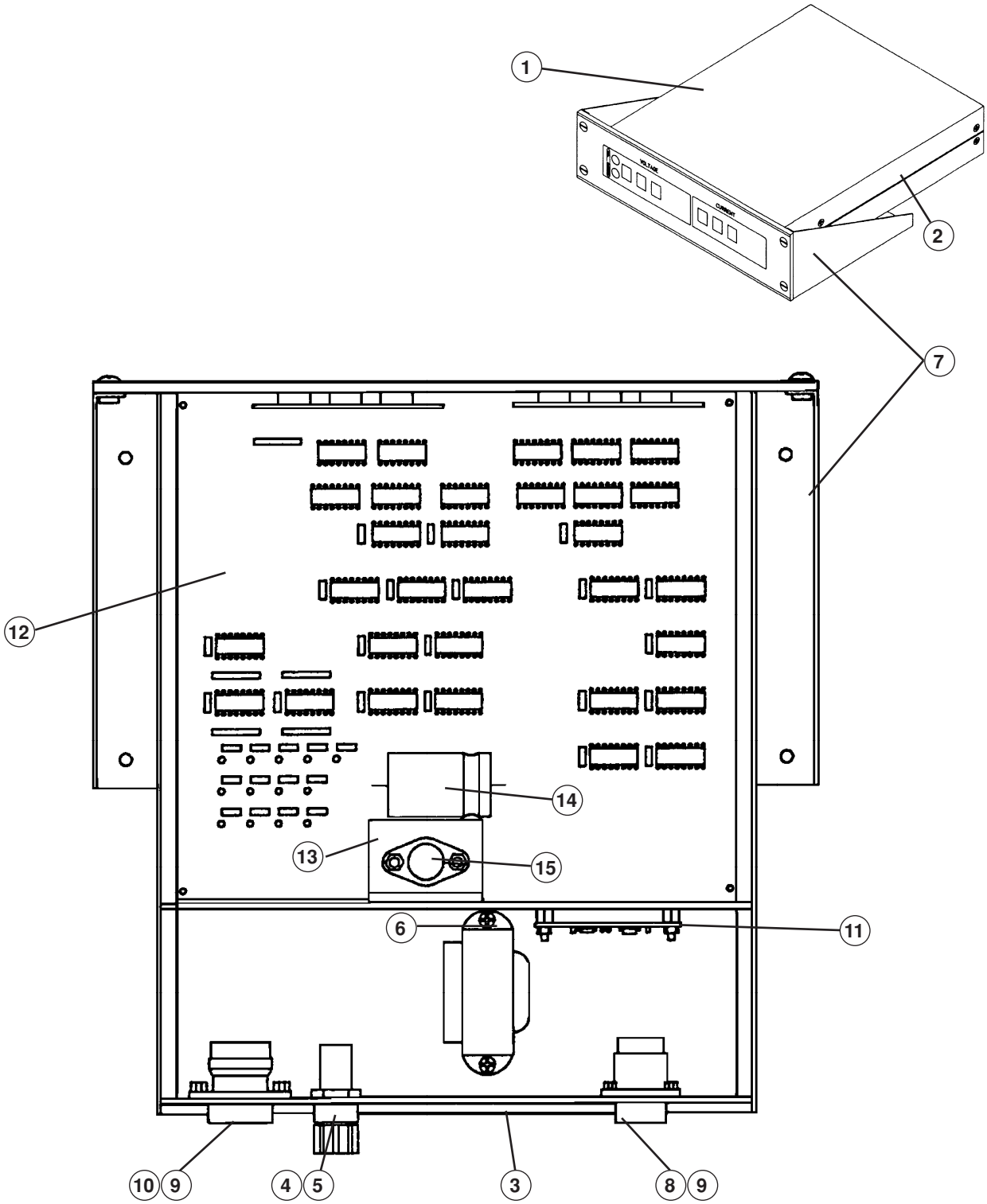

Figure 7-12 Remote V/C - Programmable (PR) Control Module

Remote V/C Ⓔ : Programmable (PR) Control Module (077013)

Item	Part Number	Description	Designator	Qty.
	077013	**Control Module, 750A Programmable V/C**		**1**
1	002107	Cov: DR/PR V/C Top		1
2	002106	Cov: DR/PR V/C Bottom		1
3	002123	Panel, Rear, PR V/C		1
4	008069	Fuse, 3/8 Amp 250V 1/4 X 1-1/4 Slow		1
5	008165	Fuseholder, Panel mount 1/4 x 1-1/4		1
6	014012	Transf'mer, DR/PR/SR Rmt		1
7	004119	Bracket, Mtg, DR/PR V/C		1
	029900	**Filter PNL-PCB SA: 077013 RVC**		**1**
8	008175	Receptacle, Shell 13-9 Std Sex	**5X1**	1
9	008176	Pin, 20-24 AWG Type III		22
10	008193	Recp, CPC 17-16 Standard Sex	**5X2**	1
	074016	Term 22-18 .250 FEM QC Insul		2
	074038	Term 22-18 FEM QC Insul		5
	074041	Term 22-18 #6 Ring Uninsul		4
	074067	Term 22-18 .25 MAL QC Insul		2
11	**041070**	**PC BD Assy Opto-Iso**		**1**
	008097	Terminal, 1/16 Pnl Swg Mt		4
12	**041371**	**PC BD Assy: 750A PR V/C**		**1**
13	004116	Heatsink, DR/PR SR V/C		1
14	009274	Capacitor, 2600 UF 15VDC		1
15	042059	IC: Regulator +5V 1.5A		1
	008097	Terminal, 1/16 Pnl Swg Mt		18
	008098	Terminal, 1/16 Pnl Prs Mt		7

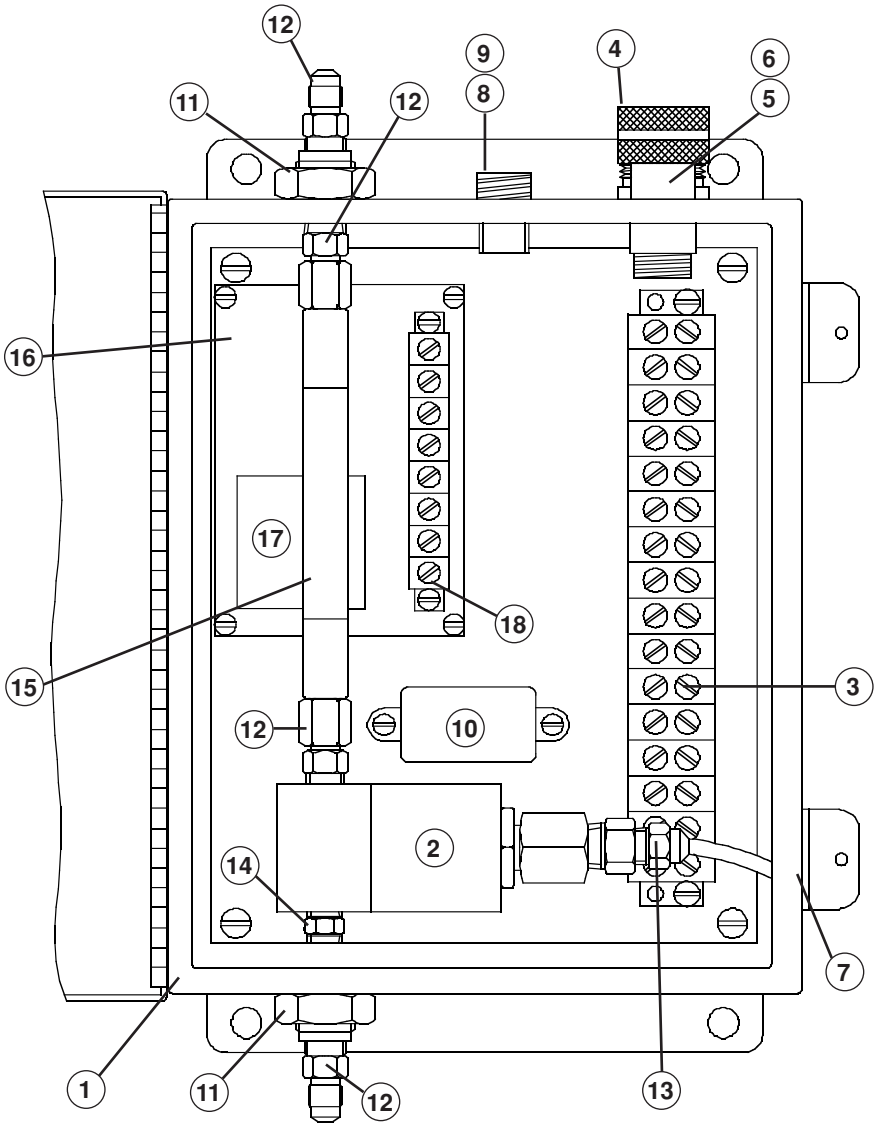

Figure 7-13 IHS Console

IHS Console Ⓕ (053016)*

Item	Part Number	Description	Designator	Qty.
	053016	**Control Module, IND IHS, HT400**		
1	002095	Encl., Ind IHS Cont. Mdl		1
2	006021	Valve, SOL 75# 1/4 FPT		1
3	008073	Terminal Strip (16)		1
4	008071	Strain Relief, 1/2 X .375-.500		1
5	008175	Receptacle, Shell Size 13-9 Std Sex	**8X1**	1
6	008176	Pin, 20-24 AWG Type III		7
7	008177	Grommet, 3/8 ID 7/16 Hole		1
8	008186	Socket, 20-24 AWG Type III		8
9	008210	Receptacle, 11-4 Rvs Sex	**8X2, 8X3**	2
10	009041	Filter, AC, 1 Amp 1B3		1
11	015001	Adapter, Bulkhead, 1/4 FPT X 15/16		2
12	015005	Adapter, 1/4 NPT x #4		4
	015259	Swivel, #4		1
13	015100	Adapter, 1/4 NPT x 1/4 Poly		1
14	015502	Nipple, 1/4 x CL		1
15	**024038**	**Hose Assy, 1/4 Blk #4 x 7"**		**1**
16	**041043**	**PC BD Assy Ind-IHS**		**1**
17	041023	Power Source, IHS/PCC Xmtr		1
18	008094	Terminal Strip (8)		1

* See also page 7-47 for breakdown of IHS system and leads components

Timer/Counter Ⓖ (073057)

Item	Part Number	Description	Designator	Qty.
	073057	**HT4X00 Cntr-Tmr**		
1	001068	Encl:DCC/PCC/RCC RVR		1
2	001391	Pnl:Cntr-Tmr Rear		1
3	001392	Pnl:Cntr-Tmr Front		1
4	005161	PB Sw:Blk SPST NO Sub-Mini		2
5	008176	Pin:24-20 AWG Type III + CRP		4
6	008193	RCPT Shell:CPC 17-16 Std Sex	**11X1**	1
7	027274	Counter, Self Powered LCD		2
8	027275	Meter, Self Powered ET		1
–	003140	Relay:120VAC DP AU Cont		2

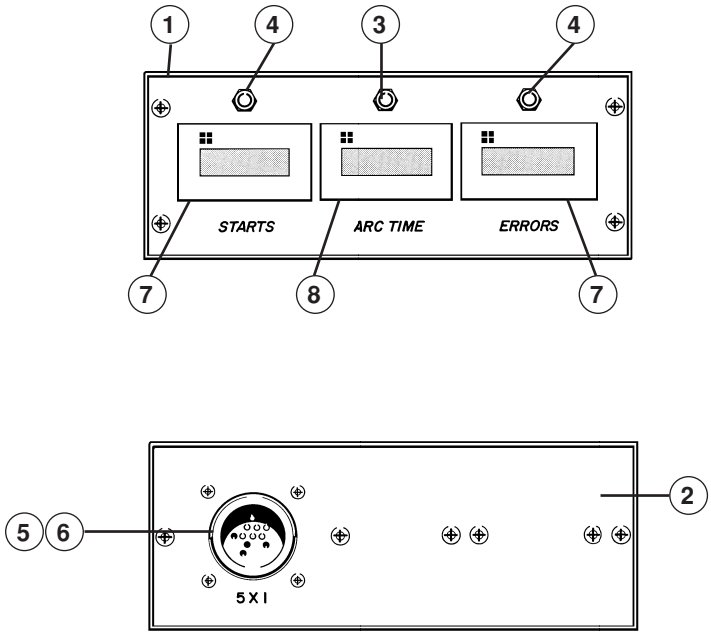

Figure 7-14 Timer/Counter

HT4001 Cables, Leads, Torch Leads and Hoses

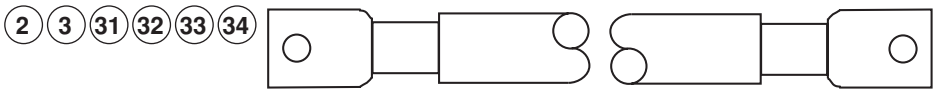

Part No.	Length	Part No.	Length	Part No.	Length
023382	15 ft (4.6 m)	123316	60 ft (18.3 m)	023081	150 ft (45.8 m)
023136	20 ft (6.1 m)	023124	75 ft (22.9 m)	123028	170 ft (51.9 m)
023078	25 ft (7.6 m)	123098	80 ft (24.4 m)	123097	175 ft (53.4 m)
023101	30 ft (9.2 m)	023080	100 ft (30.5 m)	023316	180 ft (54.9 m)
023135	40 ft (12.2 m)	123064	110 ft (33.6 m)	023188	200 ft (61 m)
023079	50 ft (15.3 m)	123084	125 ft (38.1 m)	023815	250 ft (76.3 m)

Figure 7-15 Negative Lead – PS to Remote High Frequency (RHF) Console and PS to Slave/ Positive Lead – PS to Work Table and PS to Slave

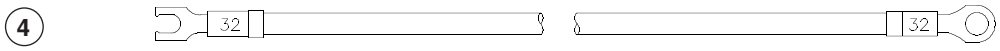

Part No.	Length	Part No.	Length
123009	25 ft (7.6 m)	123086	125 ft (38.1 m)
123010	50 ft (15.3 m)	123013	150 ft (45.8 m)
123327	60 ft (18.3 m)	123057	170 ft (51.9 m)
123011	75 ft (22.9 m)	123014	200 ft (61 m)
123012	100 ft (30.5 m)		

Figure 7-16 Nozzle Lead – PS to RHF Console

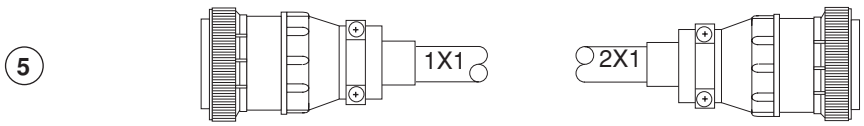

Part No.	Length	Part No.	Length
023764	50 ft (15.3 m)	123085	125 ft (38.1 m)
123314	60 ft (18.3 m)	023767	150 ft (45.8 m)
023765	75 ft (22.9 m)	123029	170 ft (51.9 m)
023766	100 ft (30.5 m)	023768	200 ft (61 m)
123065	110 ft (33.6 m)	023769	300 ft (91.5 m)

Figure 7-17 PS/RHF Cable – PS to RHF Console

6

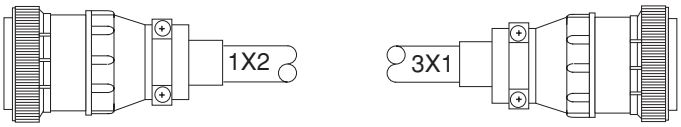

Part No.	Length	Part No.	Length
023496	50 ft (15.3 m)	123031	170 ft (51.9 m)
023497	75 ft (22.9 m)	023500	200 ft (61 m)
023498	100 ft (30.5 m)	023812	250 ft (76.3 m)
123067	110 ft (33.6 m)	023819	300 ft (91.5 m)
123087	125 ft (38.1 m)	023576	350 ft (106.8 m)
023499	150 ft (45.8 m)		

Figure 7-18 Gas Console Cable – PS to Gas Console

7

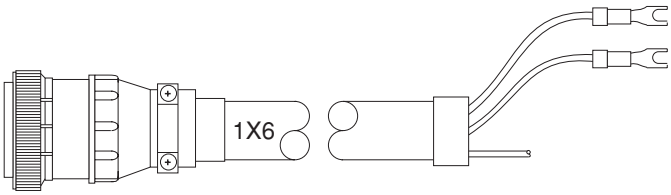

Part No.	Length	Part No.	Length
023892	25 ft (7.6 m)	123089	125 ft (38.1 m)
023893	50 ft (15.3 m)	023896	150 ft (45.8 m)
023894	75 ft (22.9 m)	123033	170 ft (51.9 m)
023895	100 ft (30.5 m)	023897	200 ft (61 m)
123069	110 ft (33.6 m)		

Figure 7-19 Machine Interface I/O Cable – PS to Machine Interface

8

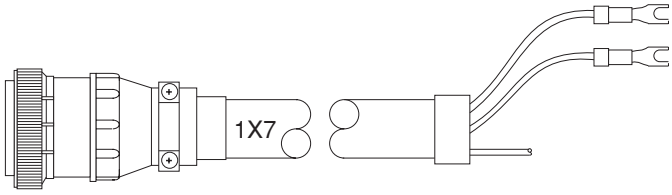

Part No.	Length	Part No.	Length
023902	6 ft (1.8 m)	023855	75 ft (22.9 m)
023851	15 ft (4.6 m)	023856	100 ft (30.5 m)
023852	25 ft (7.6 m)	023903	125 ft (38.1 m)
023853	35 ft (10.7 m)	023857	150 ft (45.8 m)
023854	50 ft (15.3 m)	023858	200 ft (61 m)

Figure 7-20 Machine Interface V/C Cable – PS to Machine Interface

9

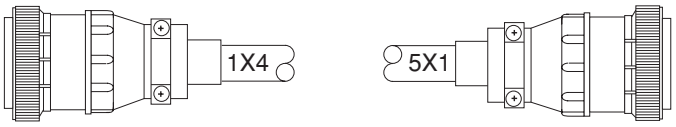

Part No.	Length	Part No.	Length
023990	7 ft (2.1 m)	123188	120 ft (36.6 m)
023911	15 ft (4.6 m)	023882	125 ft (38.1 m)
023878	25 ft (7.6 m)	023883	150 ft (45.8 m)
023879	50 ft (15.3 m)	023884	200 ft (61 m)
123040	60 ft (18.3 m)	023885	250 ft (76.3 m)
023880	75 ft (22.9 m)	023886	275 ft (83.9 m)
123073	85 ft (25.9 m)	023887	300 ft (91.5 m)
023881	100 ft (30.5 m)		

Figure 7-21 Remote Serial Cable – PS to Remote V/C

10

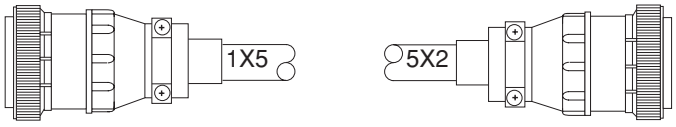

Part No.	Length	Part No.	Length
023834	15 ft (4.6 m)	023839	150 ft (45.8 m)
023835	25 ft (7.6 m)	023840	200 ft (61 m)
023836	50 ft (15.3 m)	023899	250 ft (76.3 m)
023837	75 ft (22.9 m)	023900	275 ft (83.9 m)
023838	100 ft (30.5 m)	023901	300 ft (91.5 m)
023898	125 ft (38.1 m)		

Figure 7-22 Remote V/C Cable – PS to Remote V/C

11

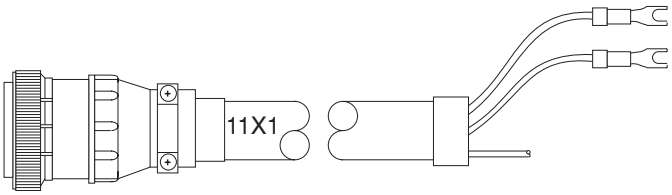

Teile-Nr.	Länge	Part No.	Length
023789	10 ft (3 m)	123063	110 ft (33.6 m)
023790	25 ft (7.5 m)	123083	125 ft (38.1 m)
023791	50 ft (15 m)	023794	150 ft (46 m)
023792	75 ft (23 m)	123027	170 ft (51.9 m)
023793	100 ft (30.5 m)		

Figure 7-23 Timer/Counter Cable – PS to Timer/Counter

12

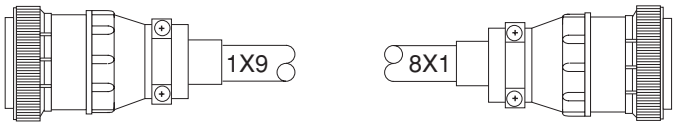

Part No.	Length	Part No.	Length
023859	25 ft (7.6 m)	023862	100 ft (30.5 m)
023860	50 ft (15.3 m)	023863	150 ft (45.8 m)
023861	75 ft (22.9 m)	023864	200 ft (61 m)

Figure 7-24 IHS Interface Cable – PS to IHS

13

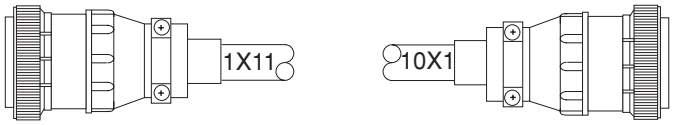

Part No.	Length	Part No.	Length
023905	25 ft (7.6 m)	123149	120 ft (36.6 m)
023906	50 ft (15.3 m)	023909	150 ft (45.8 m)
023907	75 ft (22.9 m)	123034	180 ft (54.9 m)
023908	100 ft (30.5 m)	023910	200 ft (61 m)

Figure 7-25 Water Muffler Air Control Cable – PS to Water Muffler Air Control Box

14

Part No.	Length
023866	50 ft (15.3 m)
023867	75 ft (22.9 m)
023868	100 ft (30.5 m)

Figure 7-26 Water Muffler Pump Cable – PS to Water Muffler Pump

15

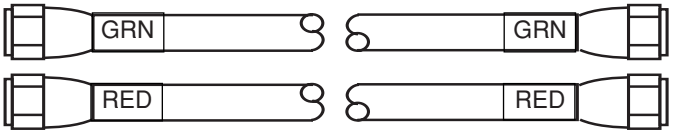

Part No.	Length	Part No.	Length
028760	3 ft (0.9 m)	128078	85 ft (25.9 m)
028860	7 ft (2.1 m)	028444	100 ft (30.5 m)
028652	10 ft (3 m)	028902	110 ft (33.6 m)
028440	15 ft (4.6 m)	028896	115 ft (35.1 m)
028653	20 ft (6.1 m)	128129	120 ft (36.6 m)
028441	25 ft (7.6 m)	028747	125 ft (38.1 m)
028442	50 ft (15.3 m)	028445	150 ft (45.8 m)
128052	60 ft (18.3 m)	128064	170 ft (51.9 m)
028443	75 ft (22.9 m)	028637	200 ft (61 m)

Figure 7-27 Cooling Hose Set – RHF Console to Water Chiller

16

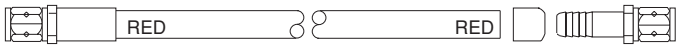

Part No.	Length	Part No.	Length	Part No.	Length
024335	26 in (.6 m)	024018	20 ft (6.1 m)	024489	56 ft (17.1 m)
024315	5 ft (1.5 m)	024034	25 ft (7.6 m)	024128	60 ft (18.3 m)
024046	6 ft (1.8 m)	024035	30 ft (9.2 m)	024441	61 ft (18.6 m)
024032	10 ft (3 m)	024036	35 ft (10.7 m)	024469	62 ft (18.9 m)
024261	11.5 ft (3.5 m)	024037	40 ft (12.2 m)	024345	75 ft (22.9 m)
024130	12 ft (3.7 m)	024208	45 ft (13.7 m)	024346	100 ft (30.5 m)
024132	14 ft (4.3 m)	024258	50 ft (15.3 m)		
024033	15 ft (4.6 m)	024179	53 ft (16.2 m)		

Figure 7-28 Injection Water Hose – RHF Console to Gas Console

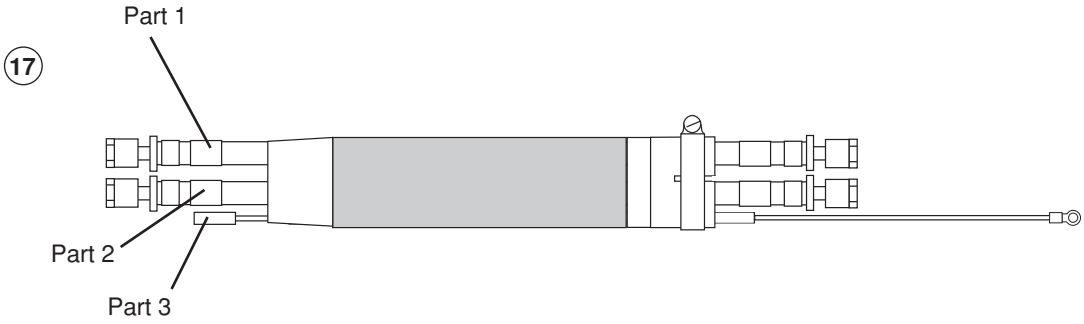

Shielded Torch Leads Part No.	Part 1	Part 2	Part 3	Length
028508	023032	023032	023377	**10 ft (3 m)**
028509	023034	023034	023378	**15 ft (4.6 m)**
028510	023012	023012	023267	**20 ft (6 m)**
028511	023013	023013	023379	**25 ft (7.6 m)**
028512	023014	023014	023380	**30 ft (9.2 m)**
028513	023015	023015	023271	**35 ft (10.7 m)**
028514	023016	023016	023367	**40 ft (12.2 m)**
028515	023387	023387	023511	**45 ft (13.7 m)**
028516	023513	023513	023512	**50 ft (15.3 m)**
028770	023772	023772	023779	**55 ft (16.8 m)**
028771	023052	023052	023321	**60 ft (18.3 m)**

Figure 7-29 Shielded Torch Leads – RHF Console to Torch

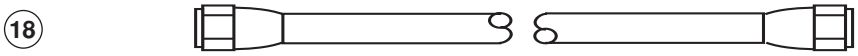

Part No.	Length	Part No.	Length
024204	15 ft (4.6 m)	024450	115 ft (35.1 m)
024205	25 ft (7.6 m)	024516	120 ft (36.6 m)
024155	50 ft (15.3 m)	024490	125 ft (38.1 m)
024398	75 ft (22.9 m)	024159	150 ft (45.8 m)
024487	85 ft (25.9 m)	024470	180 ft (54.9 m)
024206	100 ft (30.5 m)	024333	200 ft (61 m)
024481	110 ft (33.6 m)		

Figure 7-30 Oxygen Supply Hose – Gas Console to Oxygen Supply

19

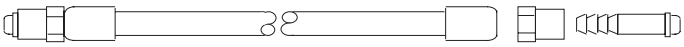

Part No.	Length	Part No.	Length
024505	6 ft (1.8 m)	024488	85 ft (25.9 m)
024210	10 ft (3 m)	024116	100 ft (30.5 m)
024203	15 ft (4.6 m)	024482	110 ft (33.6 m)
024232	20 ft (6.1 m)	024451	115 ft (35.1 m)
024134	25 ft (7.6 m)	024517	120 ft (36.6 m)
024211	35 ft (10.7 m)	024491	125 ft (38.1 m)
024112	50 ft (15.3 m)	024120	150 ft (45.8 m)
024148	75 ft (22.9 m)	024185	180 ft (54.9 m)
		024124	200 ft (61 m

Figure 7-31 Nitrogen Supply Hose – Gas Console to Nitrogen Supply

20

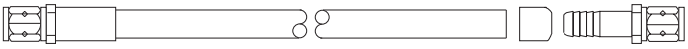

Part No.	Length	Part No.	Length	Part No.	Length
024335	26 in (.6 m)	024018	20 ft (6.1 m)	024489	56 ft (17.1 m)
024315	5 ft (1.5 m)	024034	25 ft (7.6 m)	024128	60 ft (18.3 m)
024046	6 ft (1.8 m)	024035	30 ft (9.2 m)	024441	61 ft (18.6 m)
024032	10 ft (3 m)	024036	35 ft (10.7 m)	024469	62 ft (18.9 m)
024261	11.5 ft (3.5 m)	024037	40 ft (12.2 m)	024345	75 ft (22.9 m)
024130	12 ft (3.7 m)	024208	45 ft (13.7 m)	024346	100 ft (30.5 m)
024132	14 ft (4.3 m)	024258	50 ft (15.3 m)		
024033	15 ft (4.6 m)	024179	53 ft (16.2 m)		

Figure 7-32 Injection Water Hose – Gas Console to Torch

21

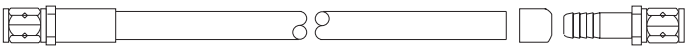

Part No.	Length	Part No.	Length
024316	5 ft (1.5 m)	024310	40 ft (12.2 m)
024307	10 ft (3 m)	024323	45 ft (13.7 m)
024320	15 ft (4.6 m)	024311	50 ft (15.3 m)
024308	20 ft (6.1 m)	024420	56 ft (17.1 m)
024321	25 ft (7.6 m)	024367	60 ft (18.3 m)
024309	30 ft (9.2 m)	024357	75 ft (22.9 m)
024322	35 ft (10.7 m)	024358	100 ft (30.5 m)

Figure 7-33 Preflow Gas Hose – Gas Console to Motor Valve Console

22

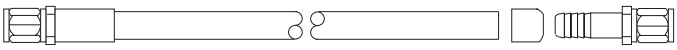

Part No.	Length	Part No.	Length
024317	5 ft (1.5 m)	024031	40 ft (12.2 m)
024026	10 ft (3 m)	024207	45 ft (13.7 m)
024027	15 ft (4.6 m)	024340	50 ft (15.3 m)
024017	20 ft (6.1 m)	024419	56 ft (17.1 m)
024028	25 ft (7.6 m)	024127	60 ft (18.3 m)
024029	30 ft (9.2 m)	024343	75 ft (22.9 m)
024030	35 ft (10.7 m)	024344	100 ft (30.5 m)

Figure 7-34 Cut Flow Gas Hose – Gas Console to Motor Valve Console

23

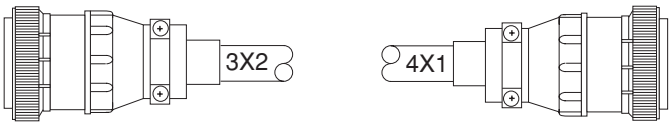

Part No.	Length	Part No.	Length
023619	5 ft (1.5 m)	023650	40 ft (12.2 m)
023646	15 ft (4.6 m)	023651	45 ft (13.7 m)
023647	20 ft (6.1 m)	023584	50 ft (15.3 m)
023583	25 ft (7.6 m)	023811	56 ft (17.1 m)
023648	30 ft (9.2 m)	023691	60 ft (18.3 m)
023649	35 ft (10.7 m)	023654	75 ft (22.9 m)

Figure 7-35 Gas Console/Motor Valve Console Cable – Gas Console to Motor Valve Console

24

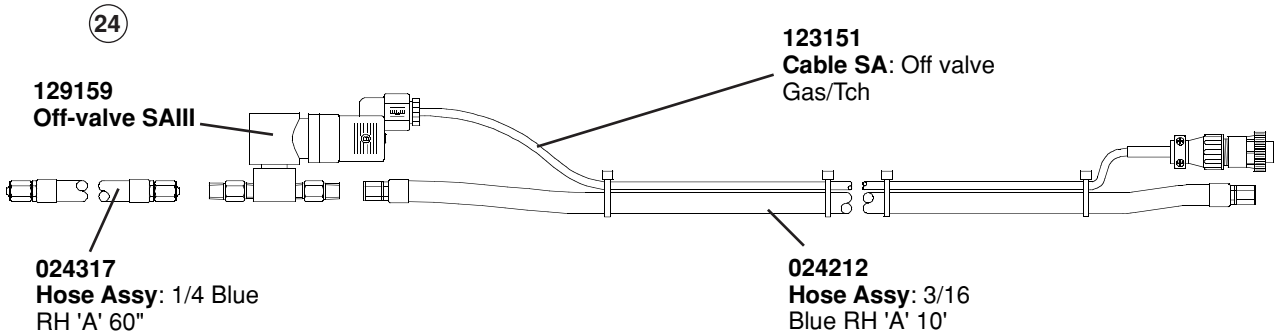

Part No.	Length
129158	14 ft (4.3 m)

Figure 7-36 Motor Valve Console Lead Assembly – Motor Valve Console to Torch

26

Part No.	Length
024144	40 ft (12.2 m)

Figure 7-37 Air Hose Assembly – IHS Module to Inductive Sensor Air Cylinder

27

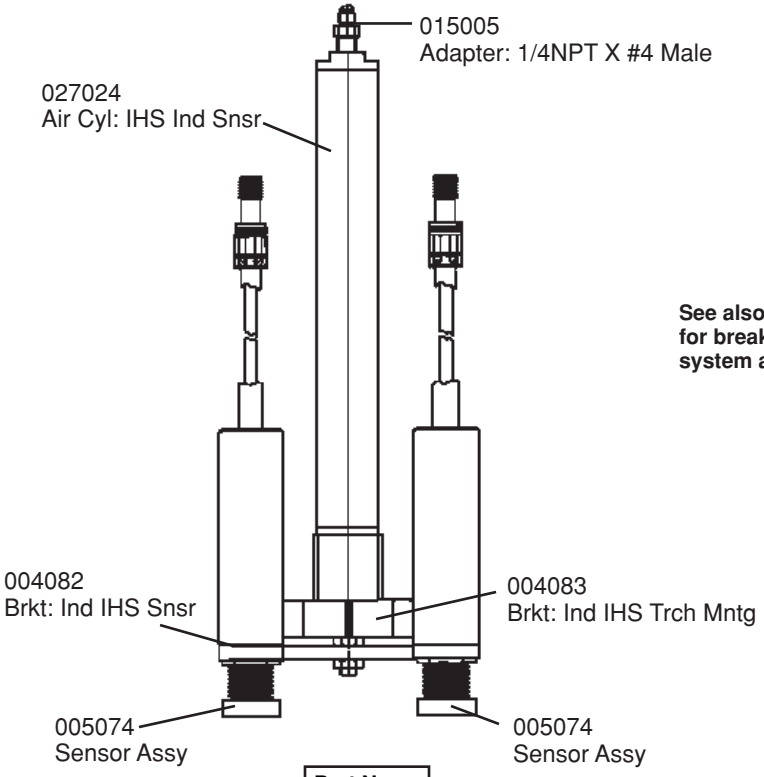

See also pg. 7-47 for breakdown of IHS system and leads

Part No.
029044

Figure 7-38 Inductive IHS Torch Mounting Assembly

28

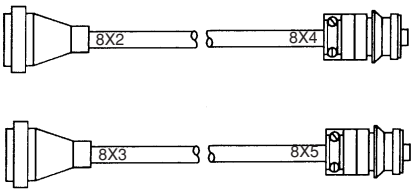

Part No.	Length
023888 023869	2 ft (.6 m) 40 ft (12.2 m)

Part No.	Length
023889 023870	2 ft (.6 m) 40 ft (12.2 m)

Figure 7-39 IHS Sensor Cables – IHS Module to IHS Probes

29

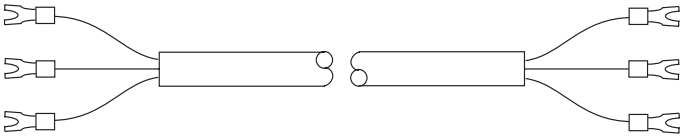

Part No.	Length	Part No.	Length
023340	15 ft (4.6 m)	023343	100 ft (30.5 m)
023341	25 ft (7.6 m)	023344	150 ft (45.8 m)
023342	50 ft (15.3 m)		

Figure 7-40 Hold Cable – PS to Second HT4001 Power Supply

30

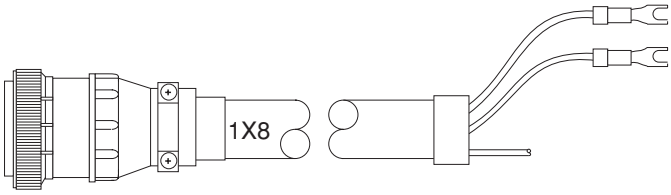

Part No.	Length
123377	25 ft (7.6 m)

Figure 7-41 Slave Cable – PS to H-401 Slave

31 32 33 34 *See page 7-31*

PAC620 Machine Torch Assembly (35)

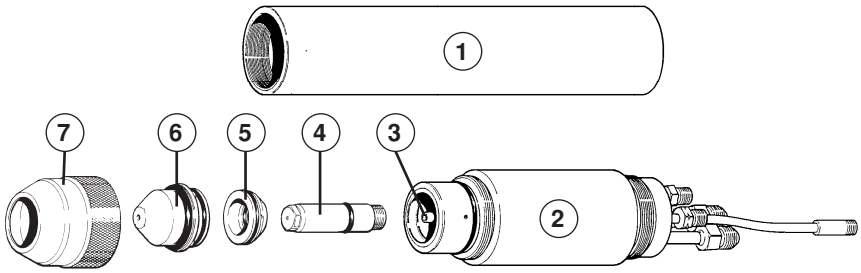

Figure 7-42 PAC620 Beveling Torch Assembly

Item	Part Number	Description	Qty.
	028741	**PAC620 Bvlng Trch Assy**	
1	020749	Torch mounting Sleeve:PAC610/620	1
2	**020970**	**PAC620 Bev Torch Main Body**	1
3	020991	Water Tube:620 Bev N2 Electdcool	1
4	020968	Electrode:PAC620 Bev N2	1
5	020039	Swirl Ring: .120/.166/.187 N2	1
6	120387	Nozzle:PAC620 Bev. .166 N2	1
7	120392	Ret Cap:PAC620 Bev N2 Noz Vectra	1

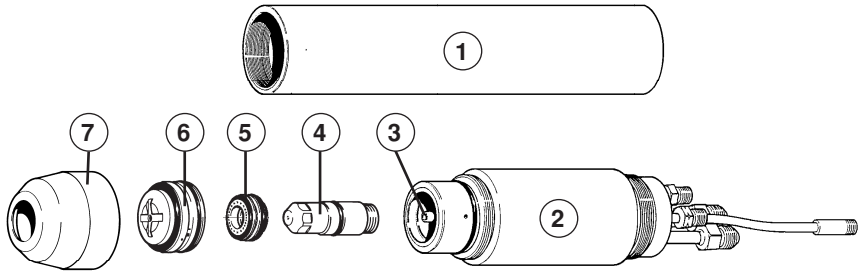

Figure 7-43 PAC620 Standard Torch Assembly

Item	Part Number	Description	Qty.
	028507	**PAC620 Standard Trch Assy**	
1	020041	Torch mounting Sleeve:2" Generic	1
2	**020328**	**PAC620 Standard Torch Main Body**	1
3	020990	Water Tube:400/600/170 Electdcool	1
4	020663	Electrode: O2	1
5	020623	Swirl Ring: O2	1
6	020086	Nozzle: .099 O2	1
7	020579	Ret Cap:PAC620 Standard (Vectra)	1

Torch Mounting Bracket

020046 **Torch Mounting Bracket (2") with Clevis**

Consumable Parts Kits

PAC620 Consumable Kit: HT4001 without Slave, Standard

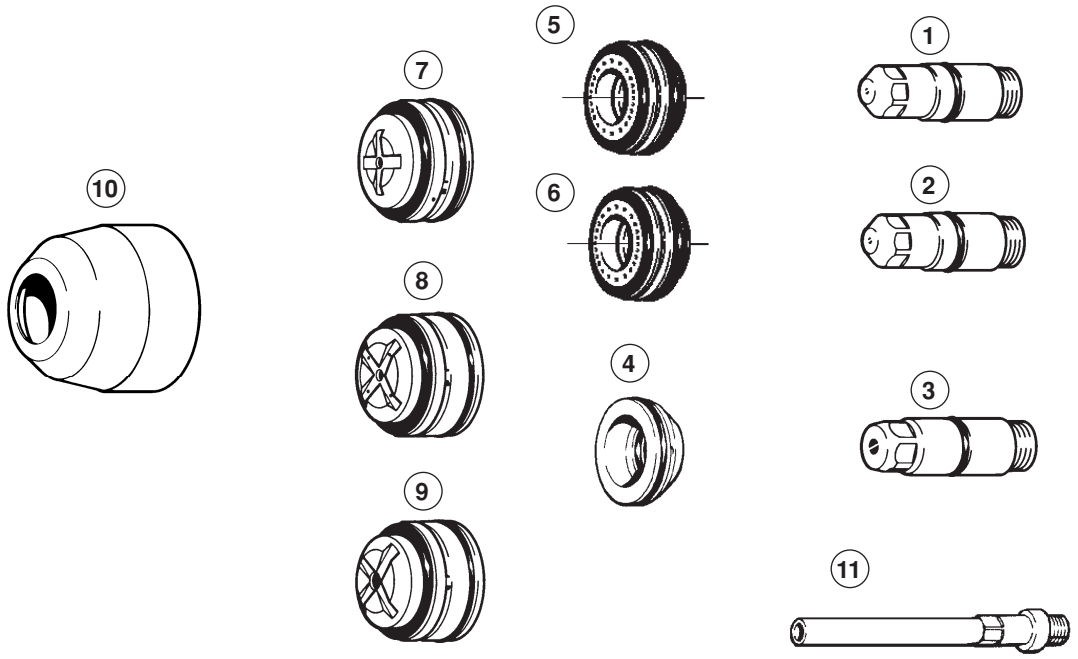

Figure 7-44 Consumable Parts - PAC620 400A Standard

Item	Part Number	Description
	028825	**PAC620 Parts Kit: HT4001 w/o Slave, Standard**
1	020663	Electrode: O2, 260A
2	120630	Electrode: O2, 340A
3	020082	Electrode: N2, 400A
4	020039	Swirl Ring: N2, .120/.166/.187
5	020623	Swirl Ring: O2
6	120135	Swirl Ring: 340A O2
7	020086	Nozzle: O2
8	020089	Nozzle: N2, .120
9	020084	Nozzle: N2, .166
10	020579	Ret Cap: Tprd Nozzle Standard (Vectra)
11	020990	Water Tube:400/600/170
	001067	Box:Gray Plastic
	004147	Electrode Gauge Assembly
	027001	Electrode Wrench:7/16 Hex
	027012	Lubricant:Silicone 2-Oz Tube
	027347	Tool:Water Tube Replacement
	025028	Kit: O-rings

PAC620 Consumable Kit: HT4001 without Slave, Bevel

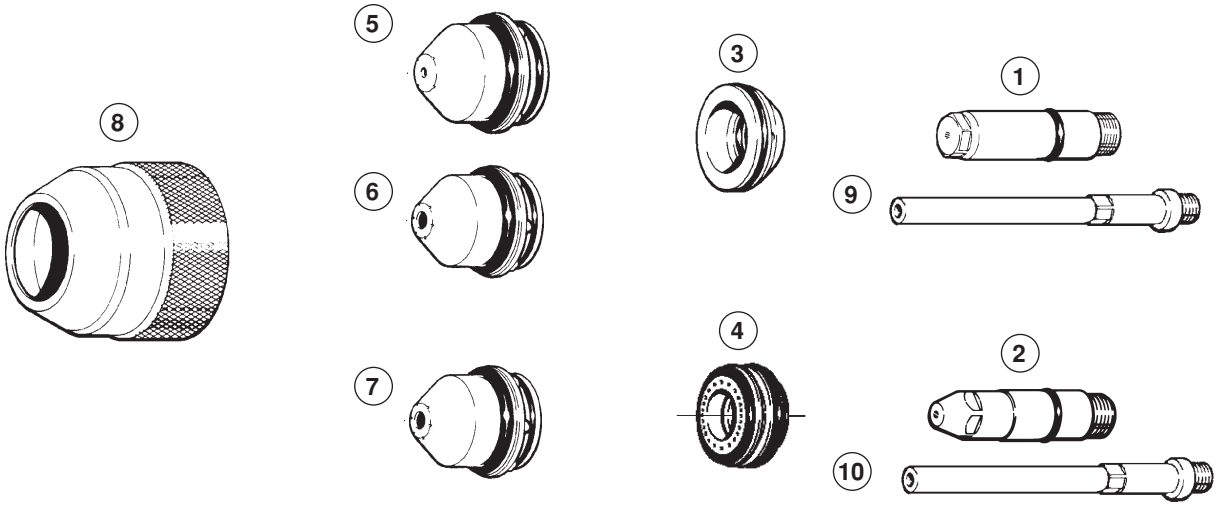

Figure 7-45 Consumable Parts – PAC620 400A Bevel

Item	Part Number	Description
	028826	**PAC620 Parts Kit: HT4001 w/o Slave, Bevel**
1	020968	Electrode: PAC620 Bev N2
2	020975	Electrode: PAC620 Bev O2
3	020039	Swirl Ring: N2
4	020623	Swirl Ring: O2
5	120386	Nozzle: PAC620 Bev N2, .120
6	120387	Nozzle: PAC620 Bev N2, .166
7	120384	Nozzle: PAC620 Bev O2, .099
8	120390	Ret Cap: PAC620 Bev (Vectra)
9	020991	Water Tube:PAC620 Bevel, N_2
10	020992	Water Tube: PAC620 Bev O2
	001067	Box:Gray Plastic
	004147	Electrode Gauge Assembly
	027001	Electrode Wrench:7/16 Hex
	027012	Lubricant:Silicone 2-Oz Tube
	027347	Tool:Water Tube Replacement
	025028	Kit:170/400/500/600/610 O-rings

Consumable Parts Kits (cont.)

PAC620 Consumable Kit: HT4001 with Slave, Standard

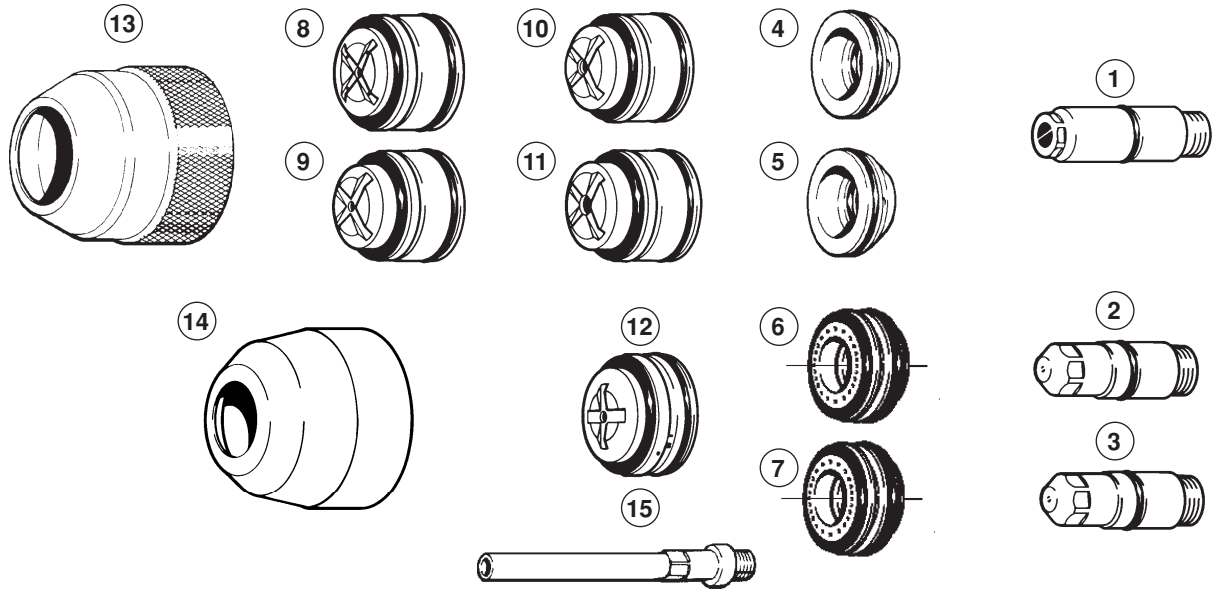

Figure 7-46 Consumable Parts – PAC620 760A Standard

Item	Part Number	Description
	028827	**PAC620 Parts Kit: HT4001 w/ Slave, Standard**
1	020285	Electrode: N2
2	020663	Electrode: O2, 260A
3	120630	Electrode: O2, 340A
4	020039	Swirl Ring: N2, .120/.166/.187
5	020040	Swirl Ring: N2, .220
6	020623	Swirl Ring: O2
7	120135	Swirl Ring: O2, 340A
8	020281	Nozzle: N2, .120
9	020282	Nozzle: N2, .166
10	020283	Nozzle: N2, .187
11	020284	Nozzle: N2, .220
12	020086	Nozzle: O2
13	020580	Ret Cap: N2, Standard (Vectra)
14	020579	Ret Cap: Tprd Nozzle Standard (Vectra)
15	020990	Water Tube:400/600/170
	001067	Box:Gray Plastic
	004147	Electrode Gauge Assembly
	027001	Electrode Wrench:7/16 Hex
	027012	Lubricant:Silicone 2-Oz Tube
	027347	Tool:Water Tube Replacement
	025028	Kit: O-rings

PAC620 Consumable Kit: HT4001 with Slave, Bevel

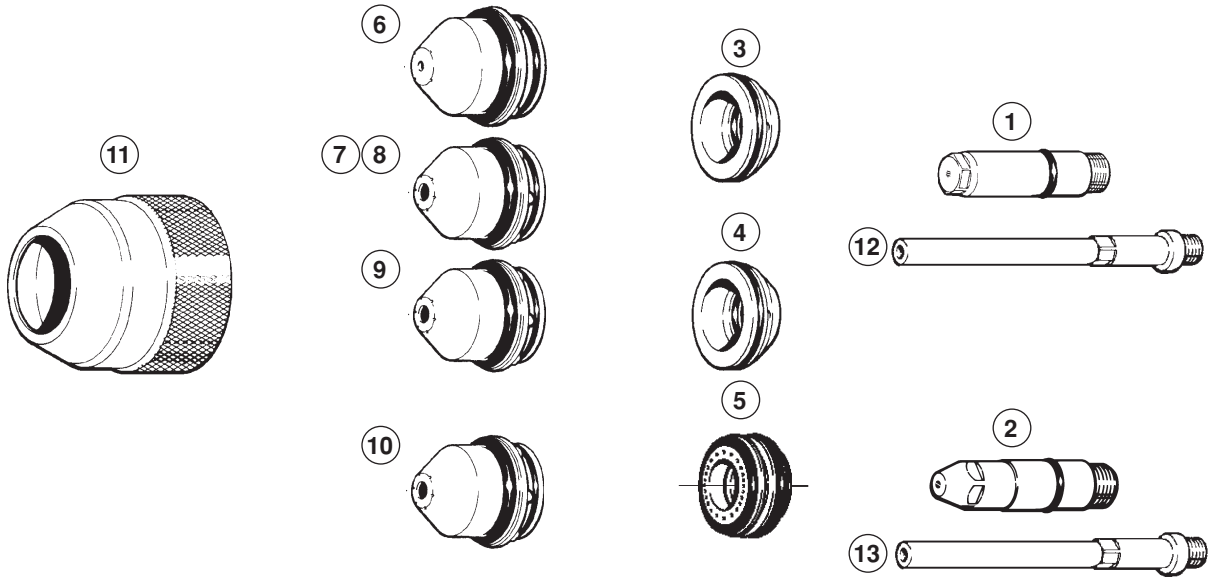

Figure 7-47 Consumable Parts – PAC620 760A Bevel

Item	Part Number	Description
	028828	**PAC620 Parts Kit: HT4001 w/ Slave, Bevel**
1	020968	Electrode: PAC620 Bev N2
2	020975	Electrode: PAC620 Bev O2
3	020039	Swirl Ring: N2, .120/.166/.187
4	020040	Swirl Ring: N2, .220
5	020623	Swirl Ring: O2
6	120386	Nozzle: PAC620 Bev N2, .120
7	120387	Nozzle: PAC620 Bev N2, .166
8	120388	Nozzle: PAC620 Bev N2, .187
9	120389	Nozzle: PAC620 Bev N2, .220
10	120384	Nozzle: PAC620 Bev O2, .099
11	120390	Ret Cap: PAC620 Bev (Vectra)
12	020991	Water Tube:PAC620 Bevel, N_2
13	020992	Water Tube: PAC620 Bev O2
	001067	Box:Gray Plastic
	004147	Electrode Gauge Assembly
	027001	Electrode Wrench:7/16 Hex
	027012	Lubricant:Silicone 2-Oz Tube
	027347	Tool:Water Tube Replacement
	025028	Kit:170/400/500/600/610 O-rings

Consumable Parts Kits (cont.)

PAC620 Consumable Kit: HT4001 CE without Slave, Standard

Part Number	Description
128130	**PAC620 Parts Kit: HT4001 CE w/o Slave, Standard**
020663	Electrode: O2, 260A
120630	Electrode: O2, 340A
020082	Electrode: N2, 400A
020039	Swirl Ring: N2, .120/.166/.187
020623	Swirl Ring: O2
120135	Swirl Ring: 340A O2
020086	Nozzle: O2
020089	Nozzle: N2, .120
020084	Nozzle: N2, .166
120466	Ret Cap CE: Tprd Nozzle Standard (Vectra)
020990	Water Tube:400/600/170
001067	Box:Gray Plastic
004147	Electrode Gauge Assembly
027001	Electrode Wrench:7/16 Hex
027012	Lubricant:Silicone 2-Oz Tube
027347	Tool:Water Tube Replacement
004732	Tool:Cap Removal
025028	Kit: O-rings

PAC620 Consumable Kit: HT4001 CE with Slave, Standard

Part Number	Description
128131	**PAC620 Parts Kit: HT4001 CE w/ Slave, Standard**
020285	Electrode: N2
020663	Electrode: O2, 260A
120630	Electrode: O2, 340A
020039	Swirl Ring: N2, .120/.166/.187
020040	Swirl Ring: N2, .220
020623	Swirl Ring: O2
120135	Swirl Ring: O2, 340A
020281	Nozzle: N2, .120
020282	Nozzle: N2, .166
020283	Nozzle: N2, .187
020284	Nozzle: N2, .220
020086	Nozzle: O2
120464	Ret Cap CE: N2, Standard (Vectra)
120466	Ret Cap CE: Tprd Nozzle Standard (Vectra)
020990	Water Tube:400/600/170
001067	Box:Gray Plastic
004147	Electrode Gauge Assembly
027001	Electrode Wrench:7/16 Hex
027012	Lubricant:Silicone 2-Oz Tube
027347	Tool:Water Tube Replacement
004732	Tool:Cap Removal
025028	Kit: O-rings

See *Consumable Parts Kits* beginning on page 6-42 for graphics of consumable parts.

Recommended Spare Parts

Power Supply

Part Number	Description	Designator	Qty.	Page (Ref) Showing Item
005149	Bulb: 120VAC T2	LT1,LT2	2	7-4
027080	Fan: 225CFM 120VAC 50/60 Hz	M1-M4,M6	1	7-4
027079	Fan: 450-550 CFM 120VAC 50/60 Hz	M5, M7	1	7-4
041588	PCB Assy: HT4001 Control Board II	PCB2	1	7-4
081038	Firmware: HT4001		2	7-4
041246	PCB Assy: 2000/HD Relay	PCB4	1	7-4
041359	PCB Assy: HT4001 750A THC Mother	PCB12	1	7-16
041358	PCB Assy: HT4001 750A THC	PCB13	1	7-16
008317	Fuse: 125 Amp, 250V	F1-F4	4	7-8
003217	Contactor: 170A 3Ø, 120VAC	CON1	1	7-16
003152	Circuit Breaker; 2 Pole 5A 600V 100ma	CB1	1	7-14,7-16
041534	PCB Assy: Power Distribution	PCB1	1	7-10
041536	PCB Assy:200/4x0x/HD Interlock	PCB5	1	7-4
129160	CH100-CE/LVD Chopper SA	CH1-CH4	1	7-6
109004	Current Sensor:Hall 100A=4V	CS1-CS4	2	7-10
109005	Current Sensor:Hall 1000A=4V	CS5	1	7-10

Remote High Frequency Console

009280	Cap: .002µF 15 15kV	C5A,C5B	2	7-18
004061	Electrode:Sprk Gap 1/8 x 1.6		3	7-18
029902	HV Transformer SA	T1	1	7-18
005139	Flowswitch:0.25 GPM SPST 1/4 NPT	FS2	1	7-18
005140	Flowswitch:1.20 GPM SPST 1/4 NPT	FS1	1	7-18
006031	Solenoid Valve:350# 1/4 FPT 120V NC	SV6	1	7-18
003149	Relay:120VAC 2PDT NO/NC	CR1	1	7-18
009795	Diode: 1200V 20A	D1	1	7-18

Gas Console

005162	Pressure Switch:0-200psi 1/8 NPT	PS1,PS2	1	7-20
006109	Solenoid Valve: 150# 1/8FPT 120V 2WNC	SV1A-SV3	1	7-20
011056	Flowmeter: 0.45 GPM/1.9SCFM	FM1	1	7-20
011057	Flow tube/BT-8 Float: 0-10 SC Cal. 2%		1	7-20
011081	Float Stop		1	7-20
011053	Flowmeter: 7.8 GPM/44CFH	FM2	1	7-20
011058	Flow tube/BP-8 Float: 0-10 SC Cal. 2%		1	7-20
011081	Float Stop		1	7-20
011008	Shield: Plastic, for 011053 or 011056		1	7-20
011069	Flowmeter:1.9 SCFM/SF-11 Flt	FM3	1	7-20
022020	Gauge: Pressure:160#/Bar 2"	PG1,PG2	1	7-20
022024	Gauge: Pressure:200#/Bar 2"	PG3	1	7-20

IHS System and Components

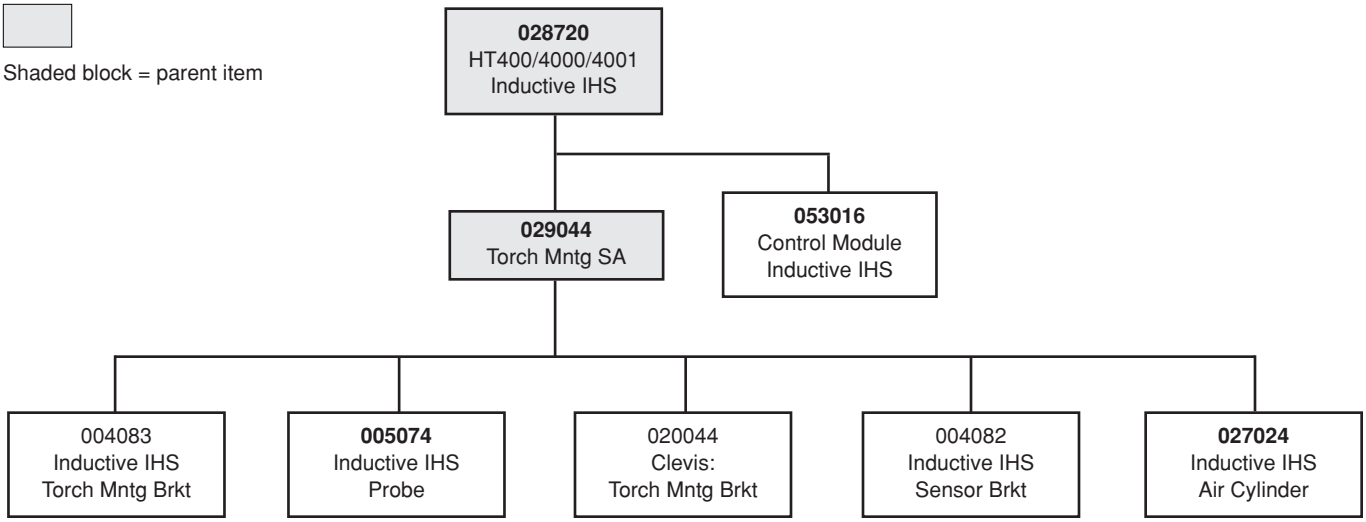

IHS Leads Packages and Components

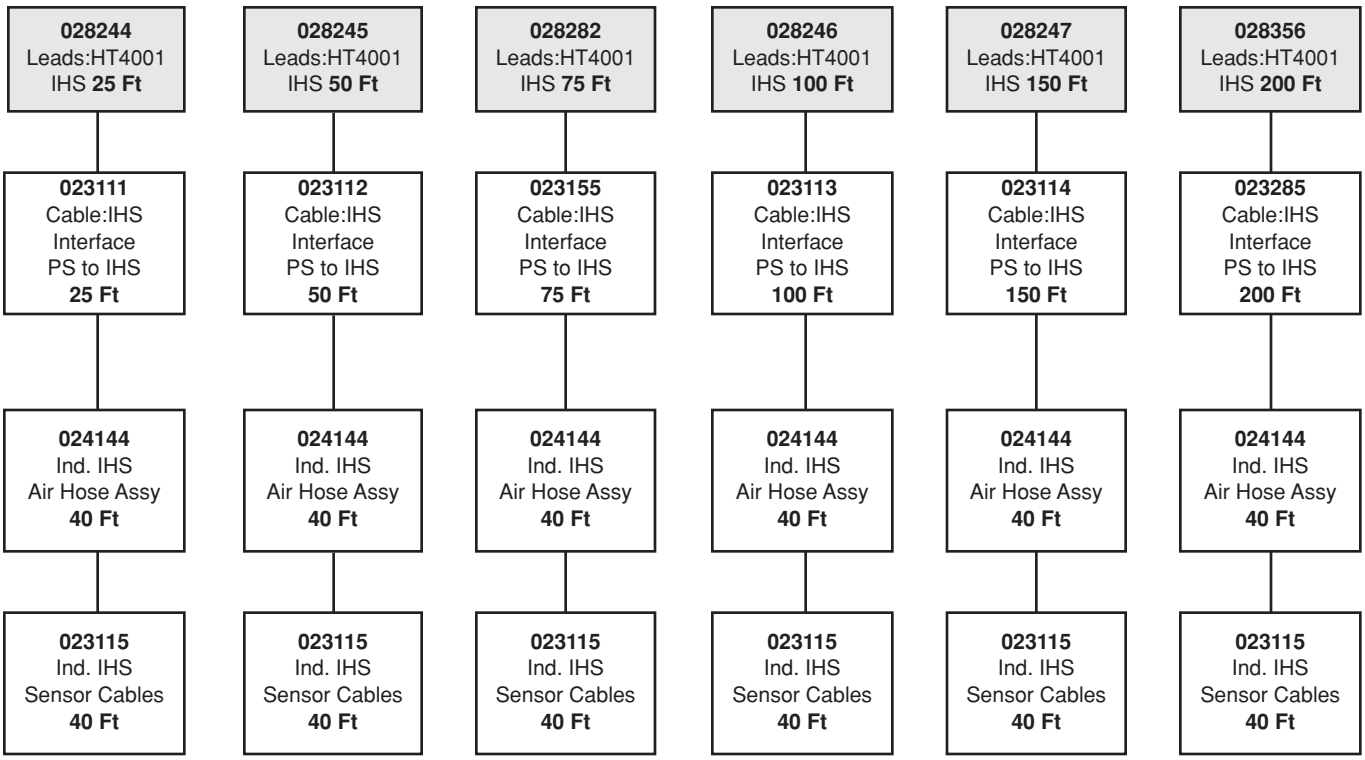

Hypertherm

Section 8

Wiring Diagrams

In this section:

Introduction 8-2
Wiring Diagram Symbols 8-2
HT4001 System Wiring Diagrams 8-5

Information

This section contains the wiring diagrams for the HT4001 system. When tracing a signal path or referencing with the **Parts List** or **Troubleshooting** sections, please be aware of the following format to assist you in understanding the wiring diagrams' organization:

- Sheet numbers are located in the lower right-hand corner.
- Page-to-page referencing is done in the following manner:

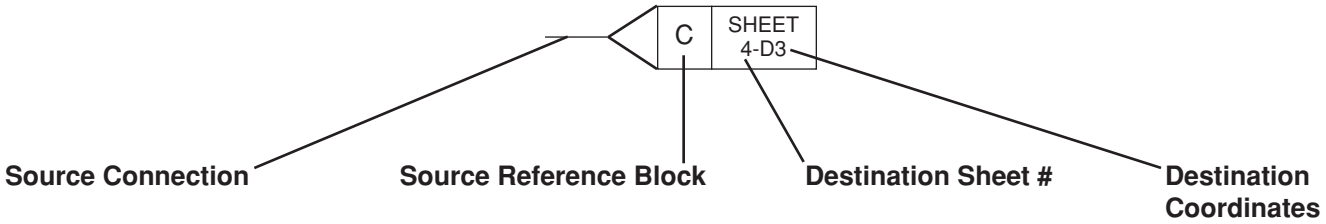

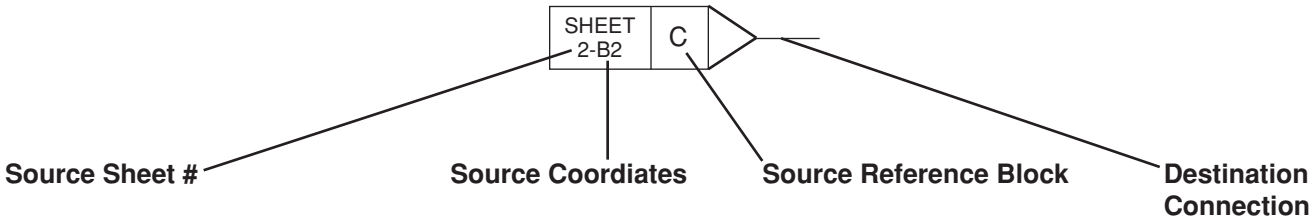

Destination and **Source Coordinates** refer to letters A-D on the Y-axis of each sheet and numbers 1-4 on the X-axis of each sheet. Lining up the coordinates will bring you to the source or destination blocks (similar to a road map).

Wiring Diagram Symbols

Wiring diagram symbols and their identification precede the system wiring diagrams in this section.

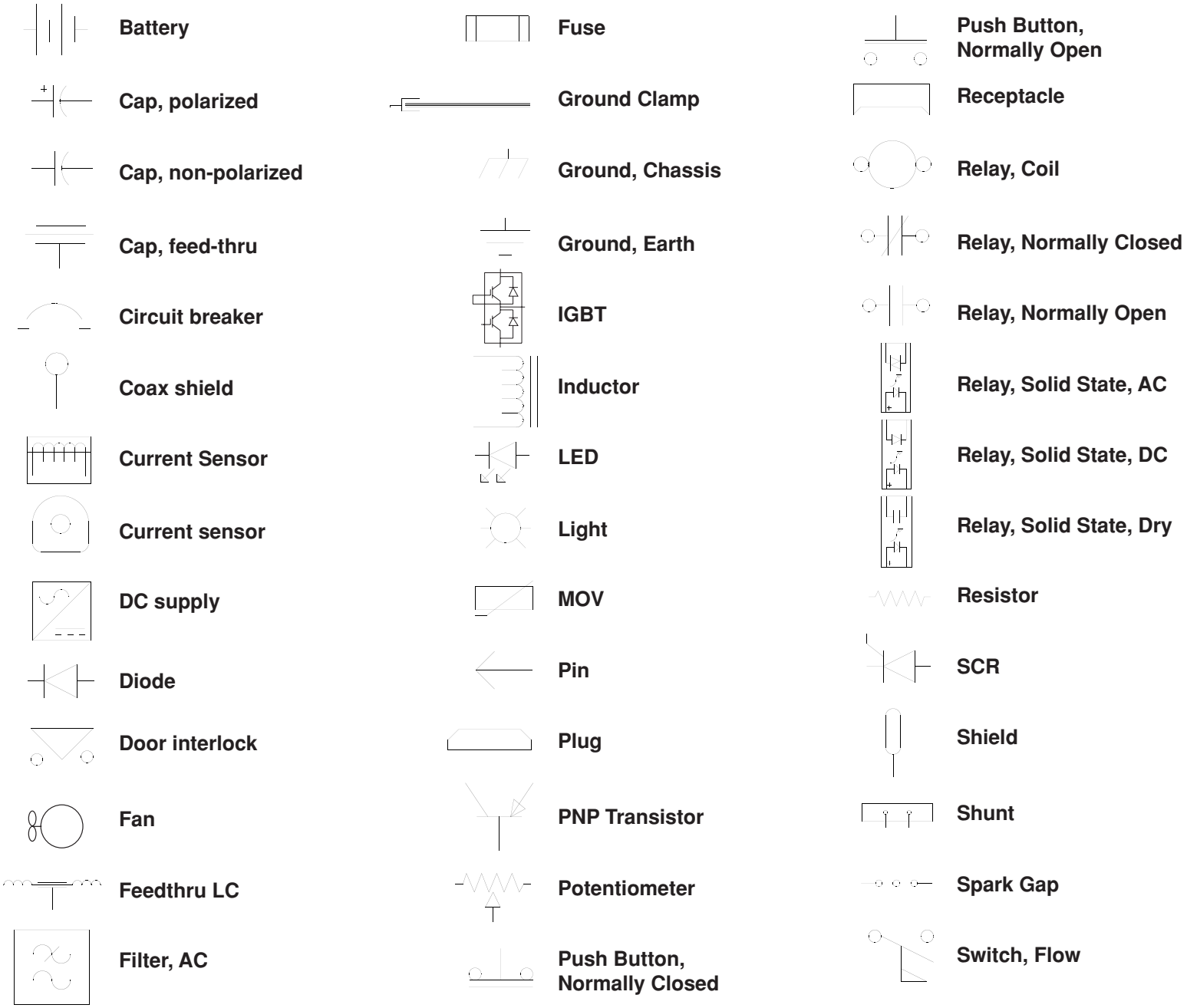
Battery
Cap, polarized
Cap, non-polarized
Cap, feed-thru
Circuit breaker
Coax shield
Current Sensor
Current sensor
DC supply
Diode
Door interlock
Fan
Feedthru LC
Filter, AC
Fuse
Ground Clamp
Ground, Chassis
Ground, Earth
IGBT
Inductor
LED
Light
MOV
Pin
Plug
PNP Transistor
Potentiometer
Push Button, Normally Closed
Push Button, Normally Open
Receptacle
Relay, Coil
Relay, Normally Closed
Relay, Normally Open
Relay, Solid State, AC
Relay, Solid State, DC
Relay, Solid State, Dry
Resistor
SCR
Shield
Shunt
Spark Gap
Switch, Flow

Switch, Level, Normally Closed

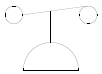
Switch, Pressure, Normally Closed

Switch, Pressure, Normally Open

Switch, 1 Pole, 1 Throw

Switch, 1 Pole, 2 Throw

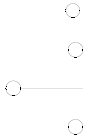
Switch, 1 Pole, 1 Throw, Center Off

Switch, Temperature, Normally Closed

Switch, Temperature, Normally Open

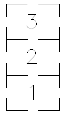

Terminal Block

Time Delay Closed, NC/Off

Time Delay Open, NO/Off

Time Delay Open, NC/On

Time Delay Closed, NO/Off

Transformer

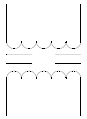
Transformer, Air Core

Transformer Coil

Triac

VAC Source

Valve, Solenoid

Voltage Source

Zener Diode

Torch Symbols

Electrode

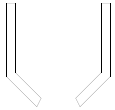
Nozzle

Shield

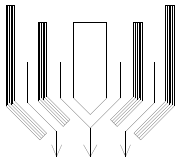
Torch

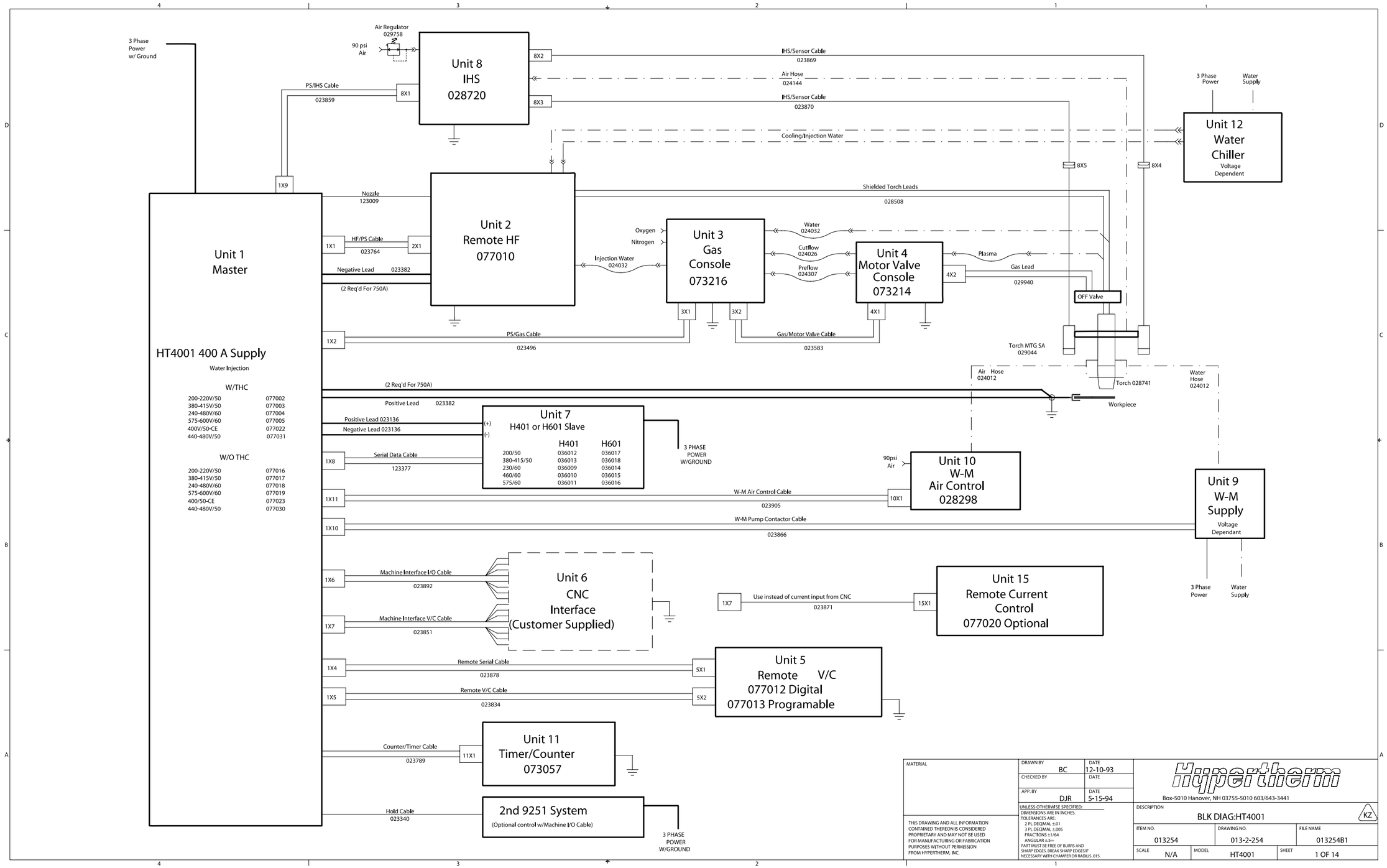
3 Phase Power w/ Ground
Air Regulator 029758
90 psi Air
Unit 8 IHS 028720
8X2
8X1
8X3
IHS/Sensor Cable 023869
Air Hose 024144
IHS/Sensor Cable 023870
PS/IHS Cable 023859
3 Phase Power
Water Supply
Unit 12 Water Chiller
Voltage Dependent
Cooling/Injection Water
8X5
8X4
1X9
Nozzle 123009
Shielded Torch Leads 028508
Unit 1 Master
HT4001 400 A Supply
Water Injection
W/THC
200-220V/50 077002
380-415V/50 077003
240-480V/60 077004
575-600V/60 077005
400V/50-CE 077022
440-480V/50 077031
W/O THC
200-220V/50 077016
380-415V/50 077017
240-480V/60 077018
575-600V/60 077019
400/50-CE 077023
440-480V/50 077030
1X1
HF/PS Cable 023764
2X1
Negative Lead 023382
(2 Req'd For 750A)
Unit 2 Remote HF 077010
Oxygen
Nitrogen
Injection Water 024032
Unit 3 Gas Console 073216
Water 024032
Cutflow 024026
Preflow 024307
Unit 4 Motor Valve Console 073214
Plasma
Gas Lead 029940
4X2
OFF Valve
3X1
3X2
4X1
1X2
PS/Gas Cable 023496
Gas/Motor Valve Cable 023583
Torch MTG SA 029044
Air Hose 024012
Torch 028741
Water Hose 024012
(2 Req'd For 750A)
Positive Lead 023382
Workpiece
Positive Lead 023136
Negative Lead 023136
Unit 7 H401 or H601 Slave
(+)
(-)
H401 H601
200/50 036012 036017
380-415/50 036013 036018
230/60 036009 036014
460/60 036010 036015
575/60 036011 036016
3 PHASE POWER W/GROUND
1X8
Serial Data Cable 123377
90psi Air
Unit 10 W-M Air Control 028298
1X11
W-M Air Control Cable 023905
10X1
Unit 9 W-M Supply
Voltage Dependant
1X10
W-M Pump Contactor Cable 023866
3 Phase Power
Water Supply
1X6
Machine Interface I/O Cable 023892
Unit 6 CNC Interface (Customer Supplied)
1X7
Machine Interface V/C Cable 023851
1X7
Use instead of current input from CNC 023871
15X1
Unit 15 Remote Current Control 077020 Optional
1X4
Remote Serial Cable 023878
5X1
Unit 5 Remote V/C 077012 Digital 077013 Programable
1X5
Remote V/C Cable 023834
5X2
Counter/Timer Cable 023789
11X1
Unit 11 Timer/Counter 073057
Hold Cable 023340
2nd 9251 System
(Optional control w/Machine I/O Cable)
3 PHASE POWER W/GROUND
MATERIAL
THIS DRAWING AND ALL INFORMATION CONTAINED THEREON IS CONSIDERED PROPRIETARY AND MAY NOT BE USED FOR MANUFACTURING OR FABRICATION PURPOSES WITHOUT PERMISSION FROM HYPERTHERM, INC.
DRAWN BY BC
DATE 12-10-93
CHECKED BY
DATE
APP. BY DJR
DATE 5-15-94
UNLESS OTHERWISE SPECIFIED:
DIMENSIONS ARE IN INCHES.
TOLERANCES ARE:
2 PL DECIMAL ±.01
3 PL DECIMAL ±.005
FRACTIONS ±1/64
ANGULAR ±.5=
PART MUST BE FREE OF BURRS AND SHARP EDGES. BREAK SHARP EDGES IF NECESSARY WITH CHAMFER OR RADIUS .015.
Hypertherm
Box-5010 Hanover, NH 03755-5010 603/643-3441
DESCRIPTION
BLK DIAG:HT4001
KZ
ITEM NO. 013254
DRAWING NO. 013-2-254
FILE NAME 013254B1
SCALE N/A
MODEL HT4001
SHEET 1 OF 14

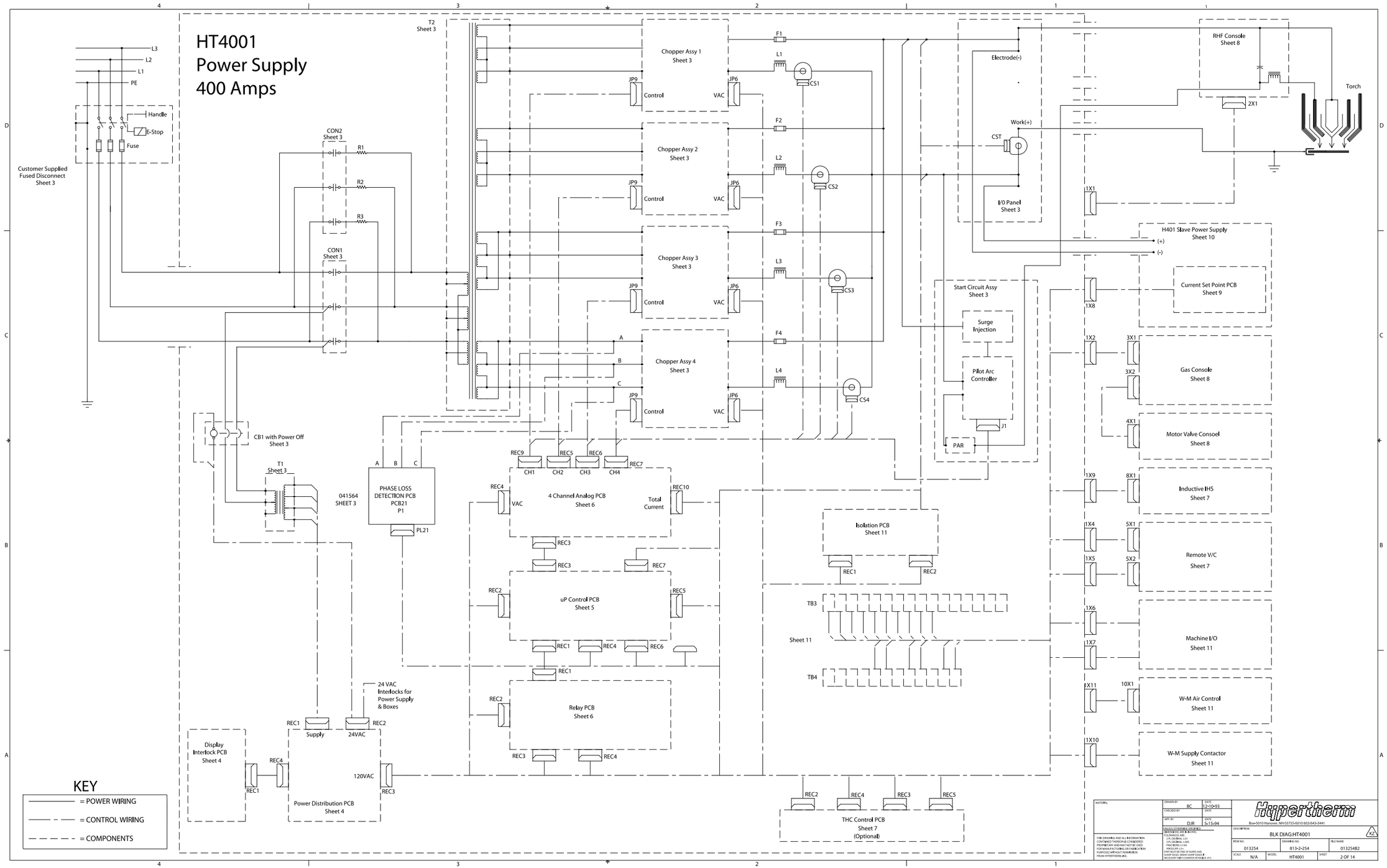
HT4001
Power Supply
400 Amps
L3
L2
L1
PE
Handle
E-Stop
Fuse
Customer Supplied Fused Disconnect Sheet 3
CON2 Sheet 3
R1
R2
R3
CON1 Sheet 3
T2 Sheet 3
Chopper Assy 1 Sheet 3
Chopper Assy 2 Sheet 3
Chopper Assy 3 Sheet 3
Chopper Assy 4 Sheet 3
JP9
Control
JP6
VAC
F1
F2
F3
F4
L1
L2
L3
L4
CS1
CS2
CS3
CS4
A
B
C
Electrode(-)
Work(+)
CST
I/O Panel Sheet 3
RHF Console Sheet 8
2X1
Torch
1X1
H401 Slave Power Supply Sheet 10
(+)
(-)
Current Set Point PCB Sheet 9
1X8
Start Circuit Assy Sheet 3
Surge Injection
Pilot Arc Controller
J1
PAR
1X2
3X1
3X2
Gas Console Sheet 8
4X1
Motor Valve Consoel Sheet 8
1X9
8X1
Inductive IHS Sheet 7
1X4
5X1
1X5
5X2
Remote V/C Sheet 7
1X6
1X7
Machine I/O Sheet 11
1X11
10X1
W-M Air Control Sheet 11
1X10
W-M Supply Contactor Sheet 11
CB1 with Power Off Sheet 3
T1 Sheet 3
041564 SHEET 3
PHASE LOSS DETECTION PCB PCB21 P1
PL21
REC9
REC5
REC6
REC7
CH1
CH2
CH3
CH4
REC4
VAC
4 Channel Analog PCB Sheet 6
Total Current
REC10
REC3
REC7
REC2
uP Control PCB Sheet 5
REC5
REC1
REC4
REC6
REC1
REC2
Relay PCB Sheet 6
REC3
REC4
Isolation PCB Sheet 11
REC1
REC2
TB3
Sheet 11
TB4
24 VAC Interlocks for Power Supply & Boxes
REC1
REC2
Supply
24VAC
Display Interlock PCB Sheet 4
REC4
REC1
120VAC
REC3
Power Distribution PCB Sheet 4
REC2
REC4
REC3
REC5
THC Control PCB Sheet 7 (Optional)
KEY
= POWER WIRING
= CONTROL WIRING
= COMPONENTS
MATERIAL
DRAWN BY BC
DATE 12-10-93
CHECKED BY
DATE
APP. BY DJR
DATE 5-15-94
UNLESS OTHERWISE SPECIFIED:
DIMENSIONS ARE IN INCHES
TOLERANCES ARE
2 PL DECIMAL ±.03
3 PL DECIMAL ±.005
FRACTIONS ±1/64
ANGLES ±1/2°
PART MUST BE FREE OF BURRS AND SHARP EDGES (BREAK SHARP EDGES IF NECESSARY PER CHAMFER SPECIFICATION)
THIS DRAWING AND ALL INFORMATION CONTAINED THEREON IS CONSIDERED PROPRIETARY AND MUST NOT BE USED FOR ANY PURPOSE OTHER THAN CONSTRUCTION PURPOSES WITHOUT PERMISSION FROM HYPERTHERMM, INC.
Hypertherm
Box-5010 Hanover, NH 03755-5010 603/643-3441
DESCRIPTION:
BLK DIAG:HT4001
ITEM NO. 013254
DRAWING NO. 013-2-254
FILE NAME 01325482
SCALE N/A
MODEL HT4001
SHEET 2 OF 14

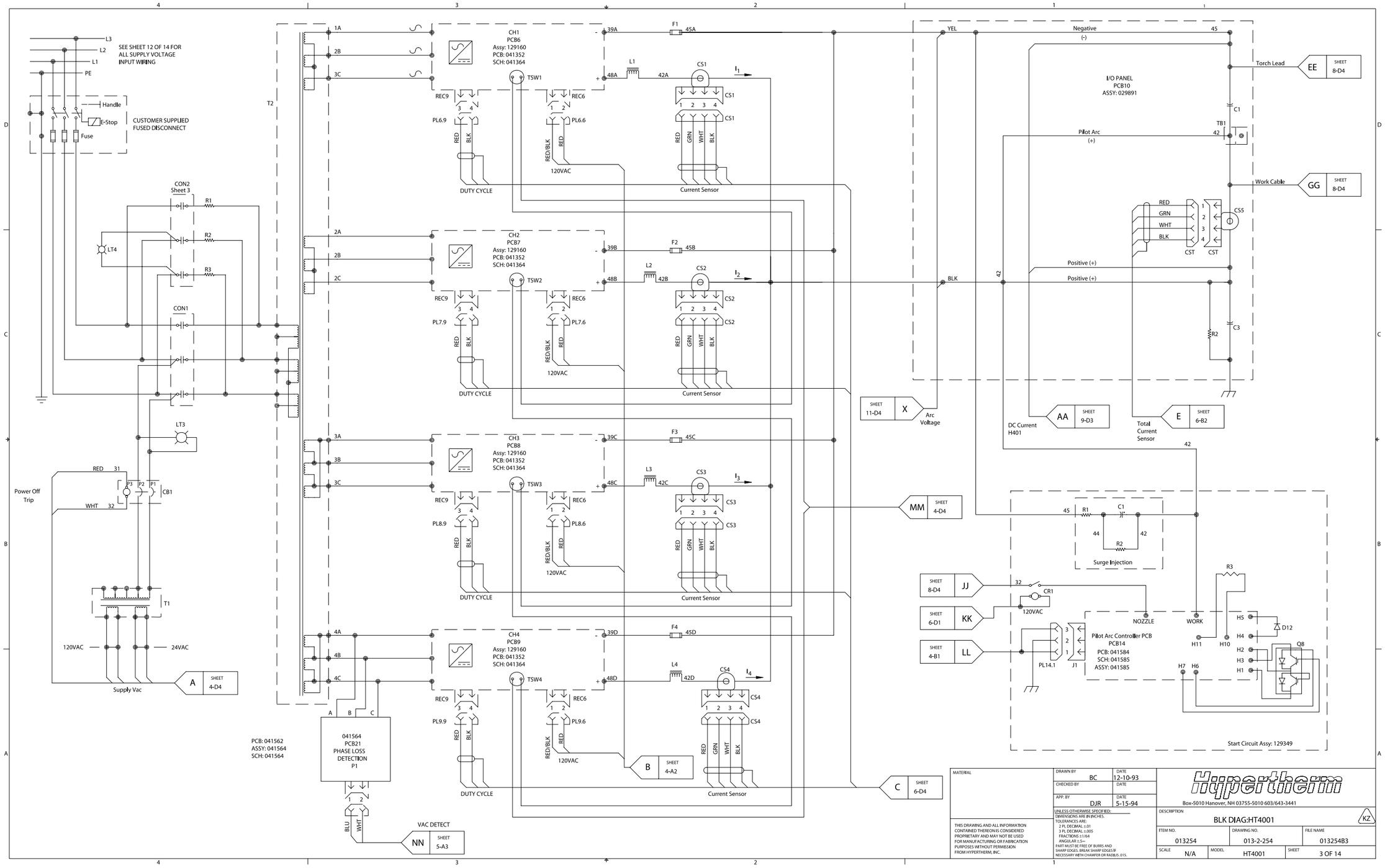
SEE SHEET 12 OF 14 FOR ALL SUPPLY VOLTAGE INPUT WIRING
L3
L2
L1
PE
Handle
E-Stop
Fuse
CUSTOMER SUPPLIED FUSED DISCONNECT
CON2 Sheet 3
R1
R2
R3
LT4
CON1
LT3
Power Off Trip
RED 31
WHT 32
CB1
T1
120VAC
24VAC
Supply Vac
A SHEET 4-D4
T2
1A
2B
3C
2A
2B
2C
3A
3B
3C
4A
4B
4C
CH1 PCB6 Assy: 129160 PCB: 041352 SCH: 041364
CH2 PCB7 Assy: 129160 PCB: 041352 SCH: 041364
CH3 PCB8 Assy: 129160 PCB: 041352 SCH: 041364
CH4 PCB9 Assy: 129160 PCB: 041352 SCH: 041364
TSW1
TSW2
TSW3
TSW4
REC9
REC6
PL6.9
PL6.6
PL7.9
PL7.6
PL8.9
PL8.6
PL9.9
PL9.6
RED
BLK
RED/BLK
120VAC
DUTY CYCLE
39A
48A
39B
48B
39C
48C
39D
48D
F1 45A
F2 45B
F3 45C
F4 45D
L1 42A
L2 42B
L3 42C
L4 42D
CS1
CS2
CS3
CS4
GRN
WHT
Current Sensor
PCB: 041562 ASSY: 041564 SCH: 041564
041564 PCB21 PHASE LOSS DETECTION P1
BLU
VAC DETECT
NN SHEET 5-A3
B SHEET 4-A2
C SHEET 6-D4
MM SHEET 4-D4
SHEET 11-D4 X Arc Voltage
YEL
BLK
42
Negative (-)
45
Torch Lead
EE SHEET 8-D4
I/O PANEL PCB10 ASSY: 029891
C1
TB1
Pilot Arc (+)
Work Cable
GG SHEET 8-D4
CS5
CST
Positive (+)
C3
R2
DC Current H401
AA SHEET 9-D3
Total Current Sensor
E SHEET 6-B2
Surge Injection
44
SHEET 8-D4 JJ
SHEET 6-D1 KK
SHEET 4-B1 LL
CR1
NOZZLE
WORK
Pilot Arc Controller PCB PCB14 PCB: 041584 SCH: 041585 ASSY: 041585
PL14.1
J1
H1
H2
H3
H4
H5
H6
H7
H10
H11
D12
Q8
Start Circuit Assy: 129349
MATERIAL
THIS DRAWING AND ALL INFORMATION CONTAINED THEREON IS CONSIDERED PROPRIETARY AND MAY NOT BE USED FOR MANUFACTURING OR FABRICATION PURPOSES WITHOUT PERMISSION FROM HYPERTHERM, INC.
DRAWN BY BC
DATE 12-10-93
CHECKED BY
DATE
APP. BY DJR
DATE 5-15-94
UNLESS OTHERWISE SPECIFIED: DIMENSIONS ARE IN INCHES. TOLERANCES ARE: 2 PL DECIMAL ±.01 3 PL DECIMAL ±.005 FRACTIONS ±1/64 ANGULAR ±.5= PART MUST BE FREE OF BURRS AND SHARP EDGES. BREAK SHARP EDGES IF NECESSARY WITH CHAMFER OR RADIUS .015.
Hypertherm
Box-5010 Hanover, NH 03755-5010 603/643-3441
DESCRIPTION
BLK DIAG:HT4001
KZ
ITEM NO. 013254
DRAWING NO. 013-2-254
FILE NAME 013254B3
SCALE N/A
MODEL HT4001
SHEET 3 OF 14

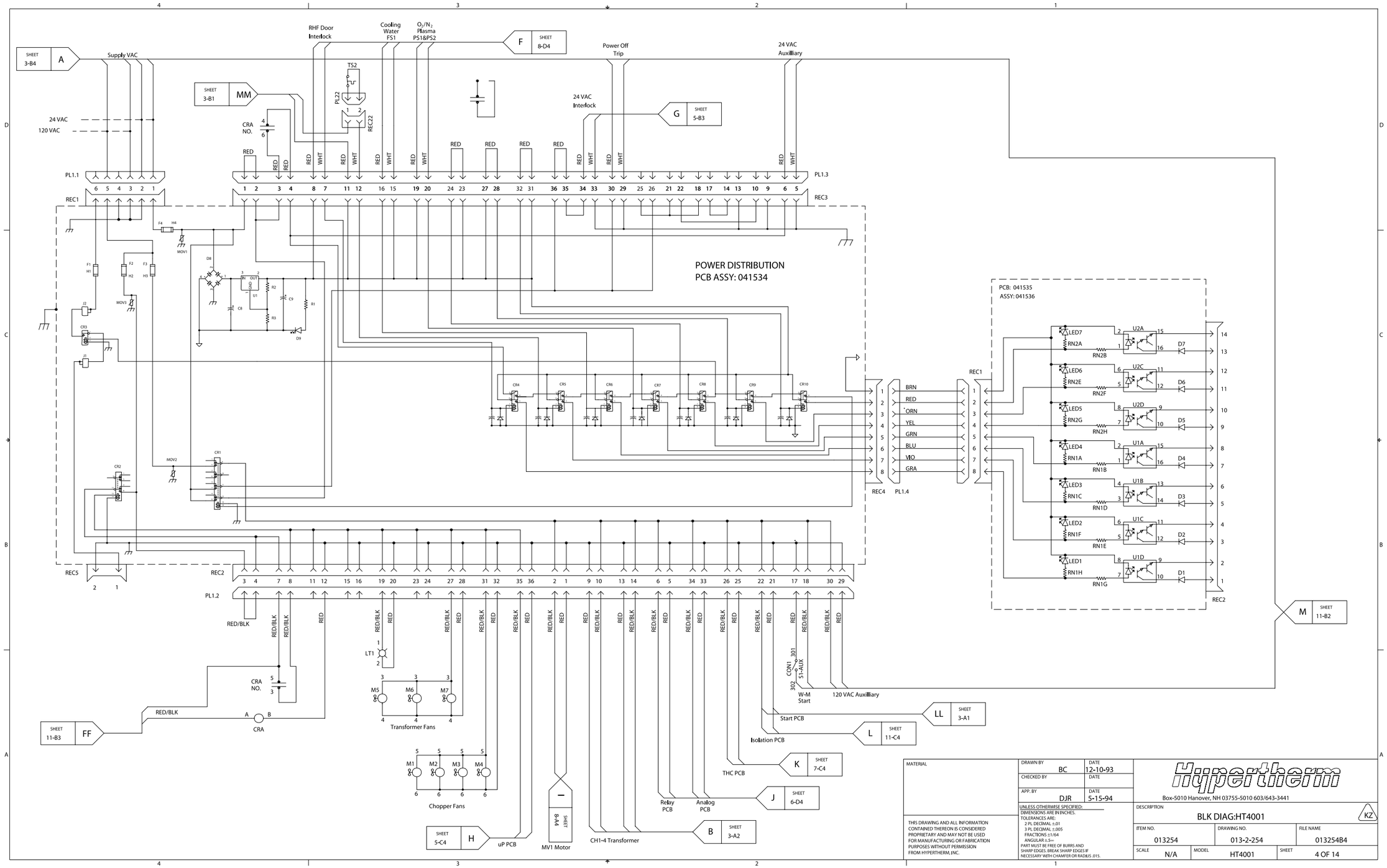
SHEET 3-B4 A
Supply VAC
24 VAC
120 VAC
RHF Door Interlock
Cooling Water FS1
O2/N2 Plasma PS1&PS2
F SHEET 8-D4
Power Off Trip
24 VAC Auxiliary
24 VAC Interlock
G SHEET 5-B3
SHEET 3-B1 MM
TS2
PL22
REC22
CRA NO.
PL1.1
PL1.3
REC1
REC3
POWER DISTRIBUTION
PCB ASSY: 041534
PCB: 041535
ASSY: 041536
BRN
RED
ORN
YEL
GRN
BLU
VIO
GRA
REC4
PL1.4
REC5
REC2
PL1.2
RED/BLK
LT1
M5
M6
M7
Transformer Fans
M1
M2
M3
M4
Chopper Fans
SHEET 11-B3 FF
CRA
SHEET 5-C4 H
uP PCB
I SHEET 8-A4
MV1 Motor
CH1-4 Transformer
B SHEET 3-A2
Relay PCB
Analog PCB
J SHEET 6-D4
THC PCB
K SHEET 7-C4
Isolation PCB
L SHEET 11-C4
Start PCB
LL SHEET 3-A1
W-M Start
120 VAC Auxilliary
CON1
S1-AUX
M SHEET 11-B2
MATERIAL
THIS DRAWING AND ALL INFORMATION CONTAINED THEREON IS CONSIDERED PROPRIETARY AND MAY NOT BE USED FOR MANUFACTURING OR FABRICATION PURPOSES WITHOUT PERMISSION FROM HYPERTHERM, INC.
DRAWN BY BC
DATE 12-10-93
CHECKED BY
DATE
APP. BY DJR
DATE 5-15-94
UNLESS OTHERWISE SPECIFIED:
DIMENSIONS ARE IN INCHES.
TOLERANCES ARE:
2 PL DECIMAL ±.01
3 PL DECIMAL ±.005
FRACTIONS ±1/64
ANGULAR ±.5°
PART MUST BE FREE OF BURRS AND SHARP EDGES. BREAK SHARP EDGES IF NECESSARY WITH CHAMFER OR RADIUS .015.
Hypertherm
Box-5010 Hanover, NH 03755-5010 603/643-3441
DESCRIPTION
BLK DIAG:HT4001
KZ
ITEM NO. 013254
DRAWING NO. 013-2-254
FILE NAME 013254B4
SCALE N/A
MODEL HT4001
SHEET 4 OF 14

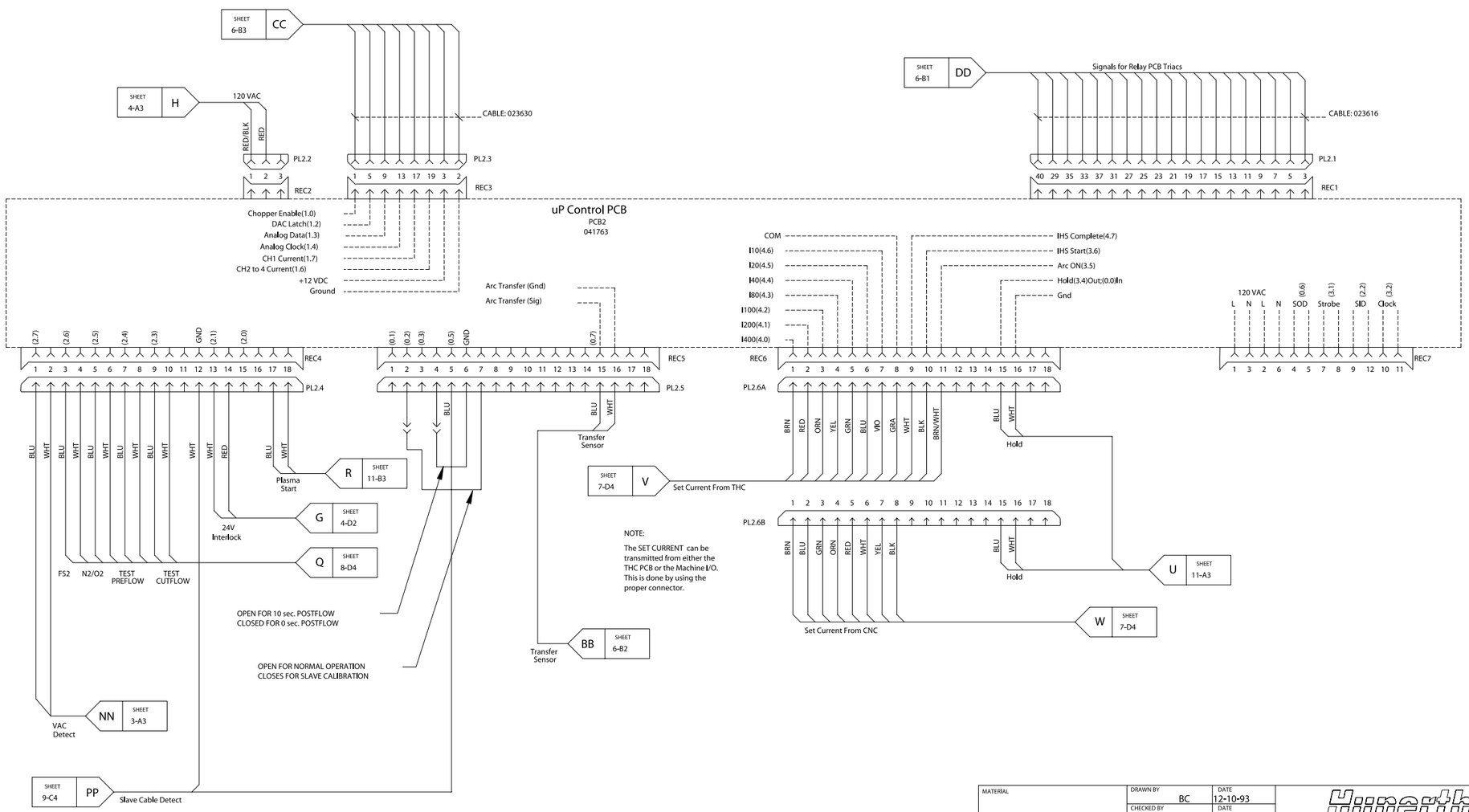

MATERIAL

THIS DRAWING AND ALL INFORMATION CONTAINED THEREON IS CONSIDERED PROPRIETARY AND MAY NOT BE USED FOR MANUFACTURING OR FABRICATION PURPOSES WITHOUT PERMISSION FROM HYPERTHERM, INC.

DRAWN BY BC	DATE 12-10-93	Hypertherm
CHECKED BY	DATE	Box-5010 Hanover, NH 03755-5010 603/643-3441
APP. BY DJR	DATE 5-15-94	

UNLESS OTHERWISE SPECIFIED:
DIMENSIONS ARE IN INCHES.
TOLERANCES ARE:
2 PL DECIMAL ±.01
3 PL DECIMAL ±.005
FRACTIONS ±1/64
ANGULAR ±.5=
PART MUST BE FREE OF BURRS AND SHARP EDGES. BREAK SHARP EDGES IF NECESSARY WITH CHAMFER OR RADIUS .015.

DESCRIPTION: BLK DIAG:HT4001 KZ

ITEM NO.	DRAWING NO.	FILE NAME
013254	013-2-254	013254B5

SCALE	MODEL	SHEET
N/A	HT4001	5 OF 14

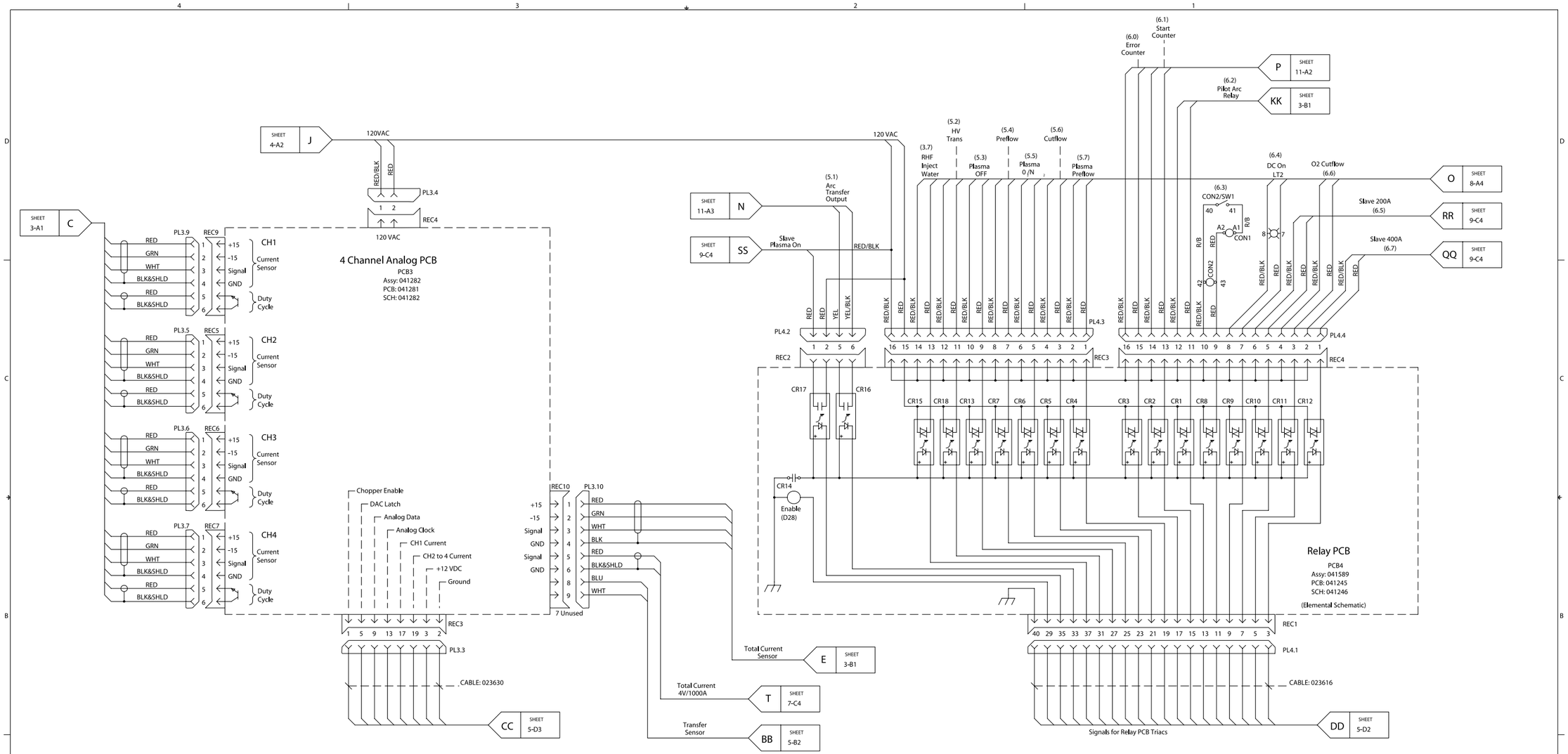

MATERIAL	DRAWN BY BC	DATE 12-10-93	Hypertherm
	CHECKED BY	DATE	Box-5010 Hanover, NH 03755-5010 603/643-3441
	APP. BY DJR	DATE 5-15-94	DESCRIPTION BLK DIAG:HT4001
THIS DRAWING AND ALL INFORMATION CONTAINED THEREON IS CONSIDERED PROPRIETARY AND MAY NOT BE USED FOR MANUFACTURING OR FABRICATION PURPOSES WITHOUT PERMISSION FROM HYPERTHERM, INC.	UNLESS OTHERWISE SPECIFIED: DIMENSIONS ARE IN INCHES. TOLERANCES ARE: 2 PL DECIMAL ±.01 3 PL DECIMAL ±.005 FRACTIONS ±1/64 ANGULAR ±.5= PART MUST BE FREE OF BURRS AND SHARP EDGES. BREAK SHARP EDGES IF NECESSARY WITH CHAMFER OR RADIUS .015.		ITEM NO. 013254 / DRAWING NO. 013-2-254 / FILE NAME 013254B6
			SCALE N/A / MODEL HT4001 / SHEET 6 OF 14

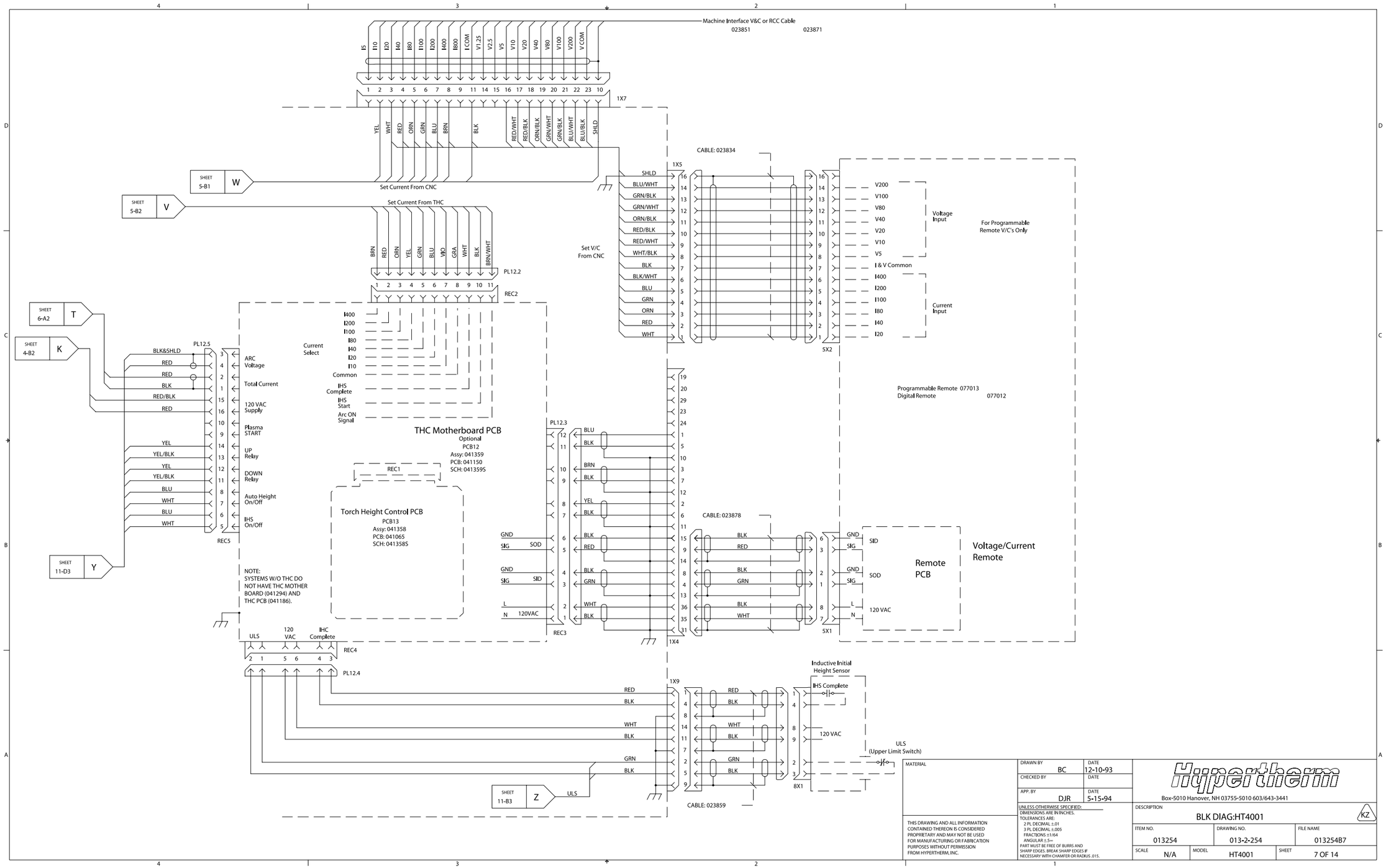
Machine Interface V&C or RCC Cable
023851
023871
I5 I10 I20 I40 I80 I100 I200 I400 I800 I COM V1.25 V2.5 V5 V10 V20 V40 V80 V100 V200 V COM
1X7
YEL WHT RED ORN GRN BLU BRN BLK RED/WHT RED/BLK ORN/BLK GRN/WHT GRN/BLK BLU/WHT BLU/BLK SHLD
SHEET 5-B1 W
Set Current From CNC
SHEET 5-B2 V
Set Current From THC
BRN RED ORN YEL GRN BLU VIO GRA WHT BLK BRN/WHT
PL12.2
REC2
CABLE: 023834
1X5
Set V/C From CNC
SHLD BLU/WHT GRN/BLK GRN/WHT ORN/BLK RED/BLK RED/WHT WHT/BLK BLK BLK/WHT BLU GRN ORN RED WHT
5X2
V200 V100 V80 V40 V20 V10 V5 I & V Common I400 I200 I100 I80 I40 I20
Voltage Input
Current Input
For Programmable Remote V/C's Only
Programmable Remote 077013
Digital Remote 077012
SHEET 6-A2 T
SHEET 4-B2 K
PL12.5
BLK&SHLD RED RED BLK RED/BLK RED
ARC Voltage
Total Current
120 VAC Supply
Plasma START
YEL YEL/BLK YEL YEL/BLK BLU WHT BLU WHT
UP Relay
DOWN Relay
Auto Height On/Off
IHS On/Off
REC5
SHEET 11-D3 Y
Current Select
I400 I200 I100 I80 I40 I20 I10 Common
IHS Complete
IHS Start
Arc ON Signal
THC Motherboard PCB
Optional
PCB12
Assy: 041359
PCB: 041150
SCH: 041359S
REC1
Torch Height Control PCB
PCB13
Assy: 041358
PCB: 041065
SCH: 041358S
NOTE:
SYSTEMS W/O THC DO NOT HAVE THC MOTHER BOARD (041294) AND THC PCB (041186).
PL12.3
BLU BLK BRN BLK YEL BLK BLK RED BLK GRN WHT BLK
GND SIG SOD
GND SIG SID
L N 120VAC
REC3
CABLE: 023878
1X4
BLK RED BLK GRN BLK WHT
5X1
GND SIG SID
GND SIG SOD
L N 120 VAC
Remote PCB
Voltage/Current Remote
ULS 120 VAC IHC Complete
REC4
PL12.4
1X9
RED BLK WHT BLK GRN BLK
Inductive Initial Height Sensor
IHS Complete
120 VAC
ULS (Upper Limit Switch)
8X1
SHEET 11-B3 Z
ULS
CABLE: 023859
MATERIAL
THIS DRAWING AND ALL INFORMATION CONTAINED THEREON IS CONSIDERED PROPRIETARY AND MAY NOT BE USED FOR MANUFACTURING OR FABRICATION PURPOSES WITHOUT PERMISSION FROM HYPERTHERM, INC.
DRAWN BY BC
DATE 12-10-93
CHECKED BY
DATE
APP. BY DJR
DATE 5-15-94
UNLESS OTHERWISE SPECIFIED:
DIMENSIONS ARE IN INCHES.
TOLERANCES ARE:
2 PL DECIMAL ±.01
3 PL DECIMAL ±.005
FRACTIONS ±1/64
ANGULAR ±.5=
PART MUST BE FREE OF BURRS AND SHARP EDGES. BREAK SHARP EDGES IF NECESSARY WITH CHAMFER OR RADIUS .015.
Hypertherm
Box-5010 Hanover, NH 03755-5010 603/643-3441
DESCRIPTION
BLK DIAG:HT4001
KZ
ITEM NO. 013254
DRAWING NO. 013-2-254
FILE NAME 013254B7
SCALE N/A
MODEL HT4001
SHEET 7 OF 14

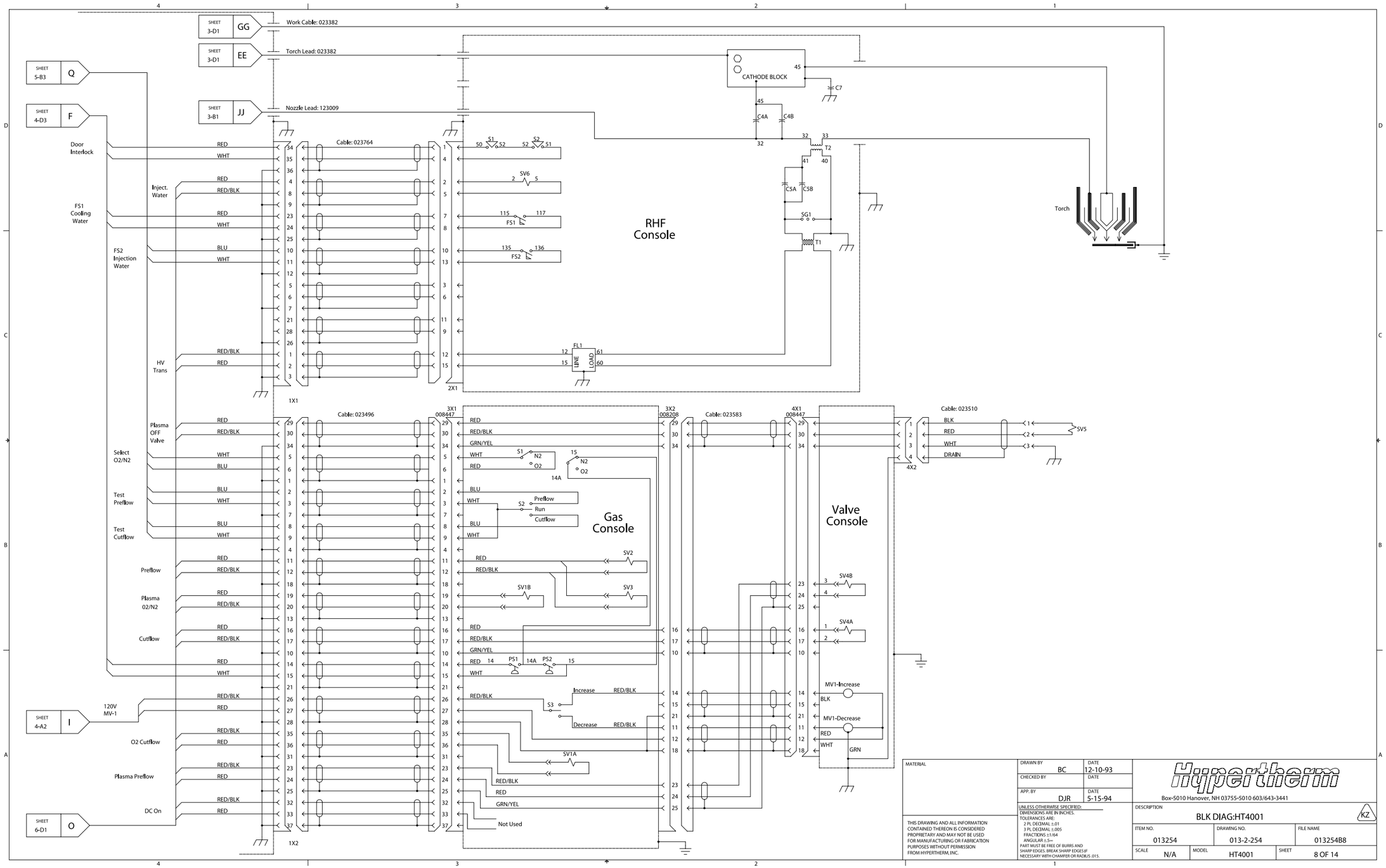

MATERIAL	DRAWN BY BC	DATE 12-10-93	Hypertherm
	CHECKED BY	DATE	Box-5010 Hanover, NH 03755-5010 603/643-3441
	APP. BY DJR	DATE 5-15-94	DESCRIPTION BLK DIAG:HT4001
THIS DRAWING AND ALL INFORMATION CONTAINED THEREON IS CONSIDERED PROPRIETARY AND MAY NOT BE USED FOR MANUFACTURING OR FABRICATION PURPOSES WITHOUT PERMISSION FROM HYPERTHERM, INC.	UNLESS OTHERWISE SPECIFIED: DIMENSIONS ARE IN INCHES. TOLERANCES ARE: 2 PL DECIMAL ±.01 3 PL DECIMAL ±.005 FRACTIONS ±1/64 ANGULAR ±.5= PART MUST BE FREE OF BURRS AND SHARP EDGES. BREAK SHARP EDGES IF NECESSARY WITH CHAMFER OR RADIUS .015.		ITEM NO. 013254 · DRAWING NO. 013-2-254 · FILE NAME 013254B8 · SCALE N/A · MODEL HT4001 · SHEET 8 OF 14

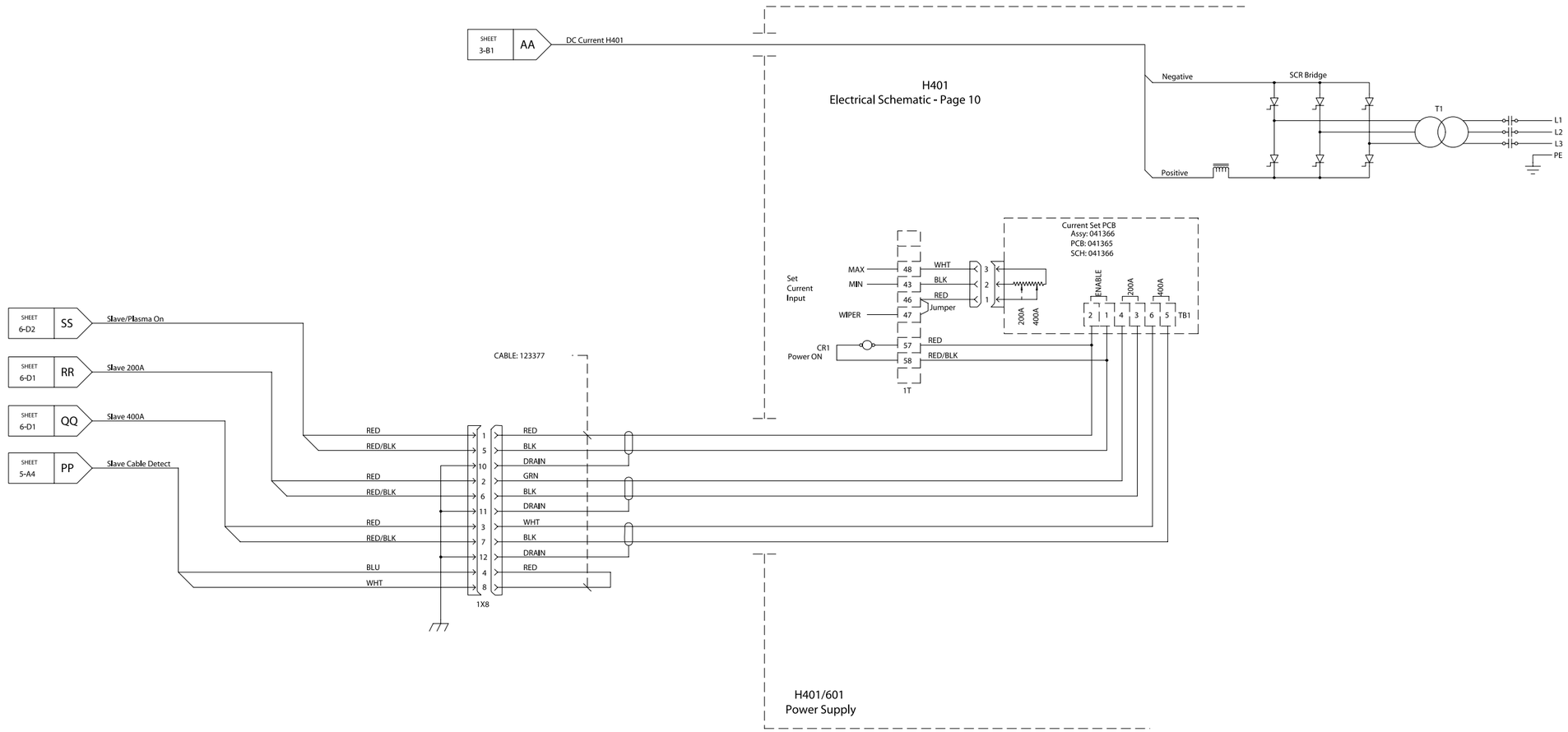

MATERIAL	DRAWN BY BC	DATE 12-10-93	Hypertherm
	CHECKED BY	DATE	
	APP. BY DJR	DATE 5-15-94	Box-5010 Hanover, NH 03755-5010 603/643-3441
THIS DRAWING AND ALL INFORMATION CONTAINED THEREON IS CONSIDERED PROPRIETARY AND MAY NOT BE USED FOR MANUFACTURING OR FABRICATION PURPOSES WITHOUT PERMISSION FROM HYPERTHERM, INC.	UNLESS OTHERWISE SPECIFIED: DIMENSIONS ARE IN INCHES. TOLERANCES ARE: 2 PL DECIMAL ±.01 3 PL DECIMAL ±.005 FRACTIONS ±1/64 ANGULAR ±.5°= PART MUST BE FREE OF BURRS AND SHARP EDGES. BREAK SHARP EDGES IF NECESSARY WITH CHAMFER OR RADIUS .015.	DESCRIPTION BLK DIAG:HT4001 KZ	
		ITEM NO. 013254	DRAWING NO. 013-2-254 / FILE NAME 013254B9
		SCALE N/A	MODEL HT4001 / SHEET 9 OF 14

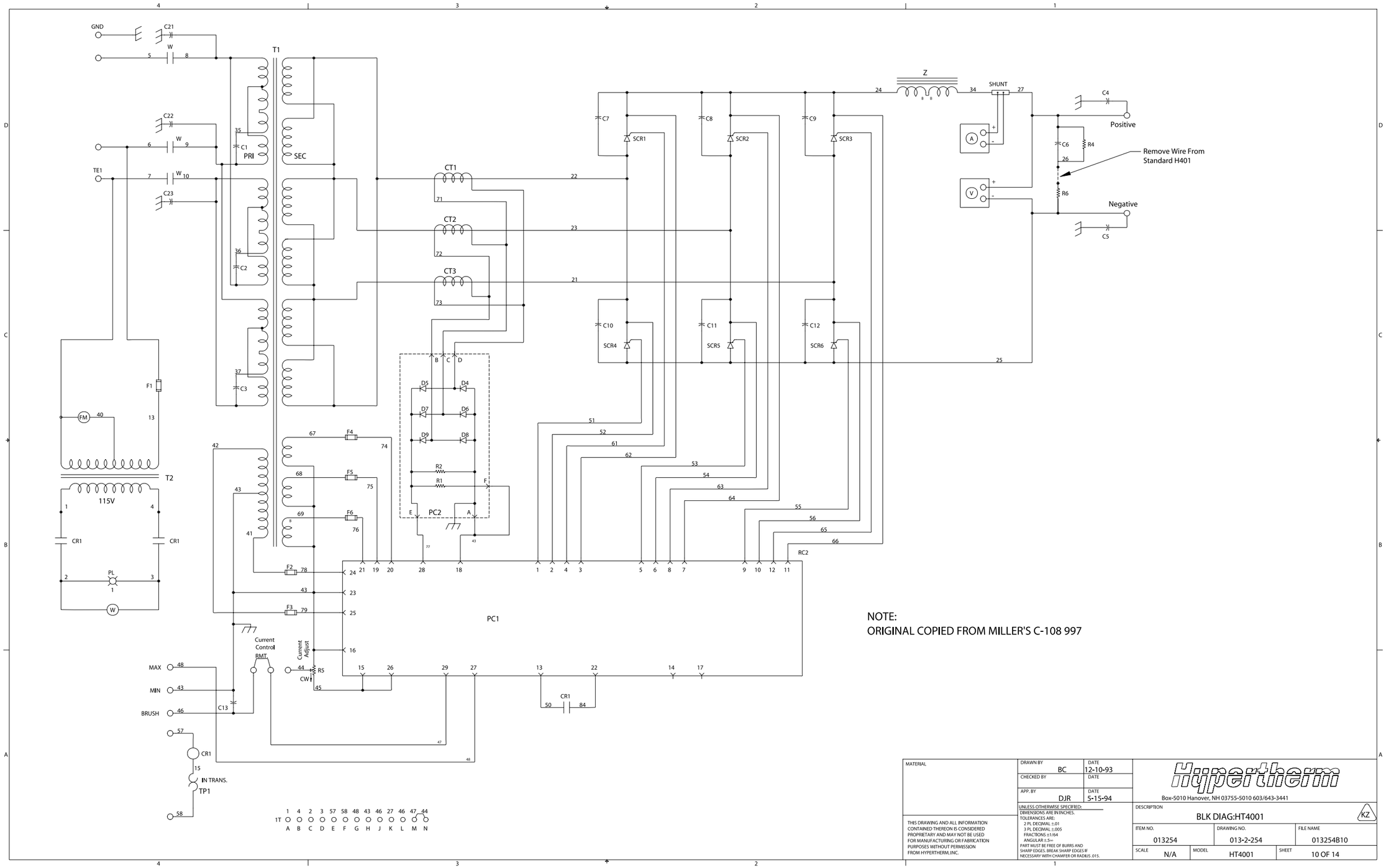

NOTE:
ORIGINAL COPIED FROM MILLER'S C-108 997

MATERIAL	DRAWN BY BC	DATE 12-10-93	Hypertherm Box-5010 Hanover, NH 03755-5010 603/643-3441
	CHECKED BY	DATE	
	APP. BY DJR	DATE 5-15-94	DESCRIPTION BLK DIAG:HT4001 KZ
THIS DRAWING AND ALL INFORMATION CONTAINED THEREON IS CONSIDERED PROPRIETARY AND MAY NOT BE USED FOR MANUFACTURING OR FABRICATION PURPOSES WITHOUT PERMISSION FROM HYPERTHERM, INC.	UNLESS OTHERWISE SPECIFIED: DIMENSIONS ARE IN INCHES. TOLERANCES ARE: 2 PL DECIMAL ±.01 3 PL DECIMAL ±.005 FRACTIONS ±1/64 ANGULAR ±.5= PART MUST BE FREE OF BURRS AND SHARP EDGES. BREAK SHARP EDGES IF NECESSARY WITH CHAMFER OR RADIUS .015.		ITEM NO. 013254 / DRAWING NO. 013-2-254 / FILE NAME 013254B10
			SCALE N/A / MODEL HT4001 / SHEET 10 OF 14

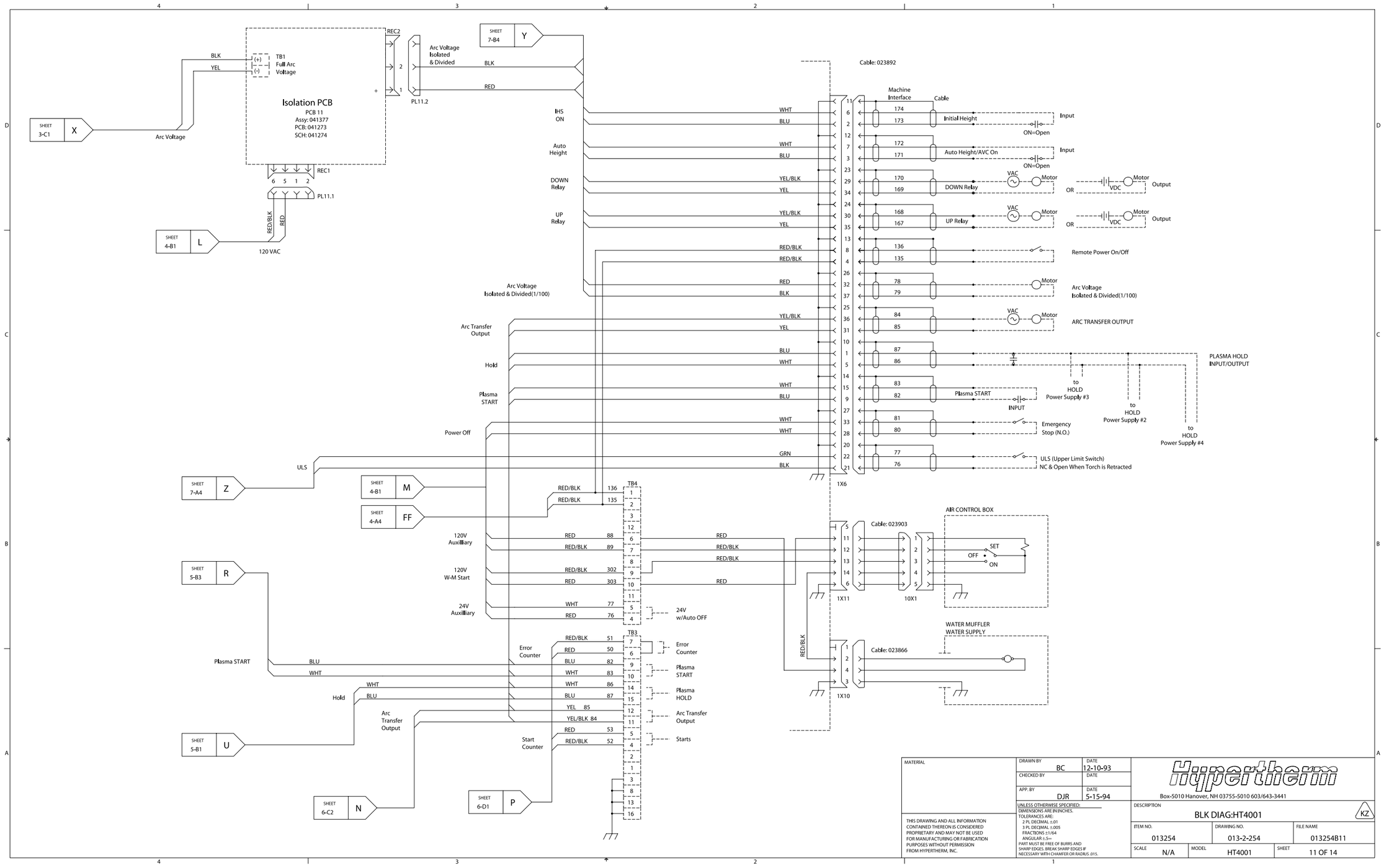
Isolation PCB
PCB 11
Assy: 041377
PCB: 041273
SCH: 041274
TB1
Full Arc Voltage
Arc Voltage
Arc Voltage Isolated & Divided
REC2
PL11.2
REC1
PL11.1
120 VAC
Cable: 023892
Machine Interface
Cable
IHS ON
Auto Height
DOWN Relay
UP Relay
Initial Height
Auto Height/AVC On
DOWN Relay
UP Relay
Remote Power On/Off
Arc Voltage Isolated & Divided(1/100)
ARC TRANSFER OUTPUT
PLASMA HOLD INPUT/OUTPUT
Plasma START
Emergency Stop (N.O.)
ULS (Upper Limit Switch) NC & Open When Torch is Retracted
Arc Transfer Output
Hold
Power Off
ULS
120V Auxilliary
120V W-M Start
24V Auxilliary
24V w/Auto OFF
Error Counter
Plasma START
Plasma HOLD
Arc Transfer Output
Starts
Start Counter
TB4
TB3
1X6
1X11
10X1
1X10
Cable: 023903
Cable: 023866
AIR CONTROL BOX
WATER MUFFLER WATER SUPPLY
SET
OFF
ON
Hypertherm
Box-5010 Hanover, NH 03755-5010 603/643-3441
BLK DIAG:HT4001
KZ
THIS DRAWING AND ALL INFORMATION CONTAINED THEREON IS CONSIDERED PROPRIETARY AND MAY NOT BE USED FOR MANUFACTURING OR FABRICATION PURPOSES WITHOUT PERMISSION FROM HYPERTHERM, INC.
DRAWN BY BC
DATE 12-10-93
CHECKED BY
DATE
APP. BY DJR
DATE 5-15-94
UNLESS OTHERWISE SPECIFIED:
DIMENSIONS ARE IN INCHES.
TOLERANCES ARE:
2 PL DECIMAL ±.01
3 PL DECIMAL ±.005
FRACTIONS ±1/64
ANGULAR ±.5°
PART MUST BE FREE OF BURRS AND SHARP EDGES. BREAK SHARP EDGES IF NECESSARY WITH CHAMFER OR RADIUS .015.
ITEM NO. 013254
DRAWING NO. 013-2-254
FILE NAME 013254B11
SCALE N/A
MODEL HT4001
SHEET 11 OF 14

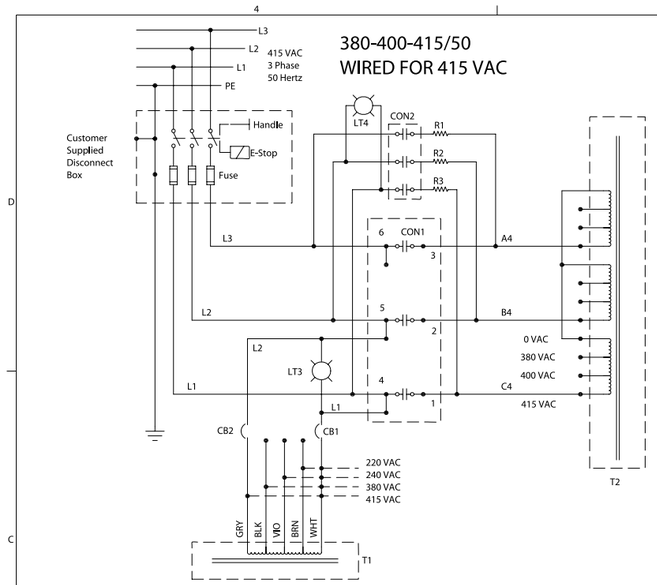

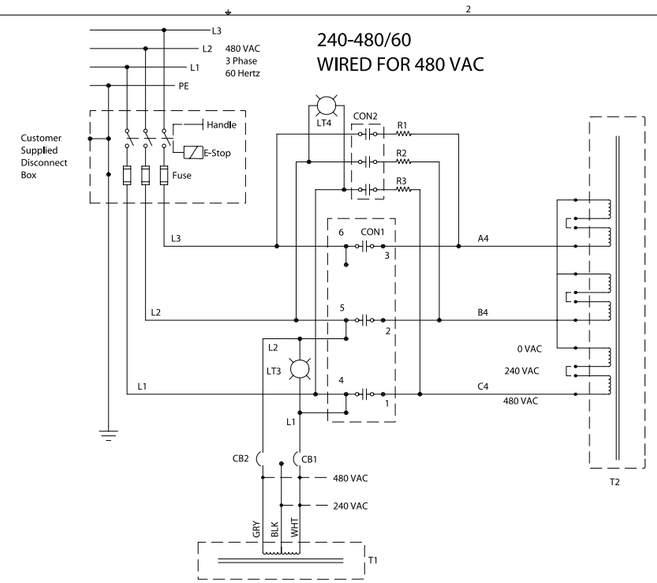

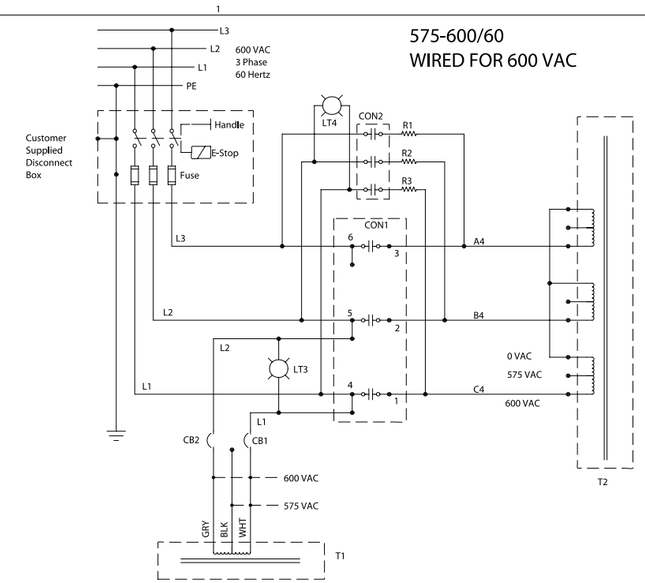

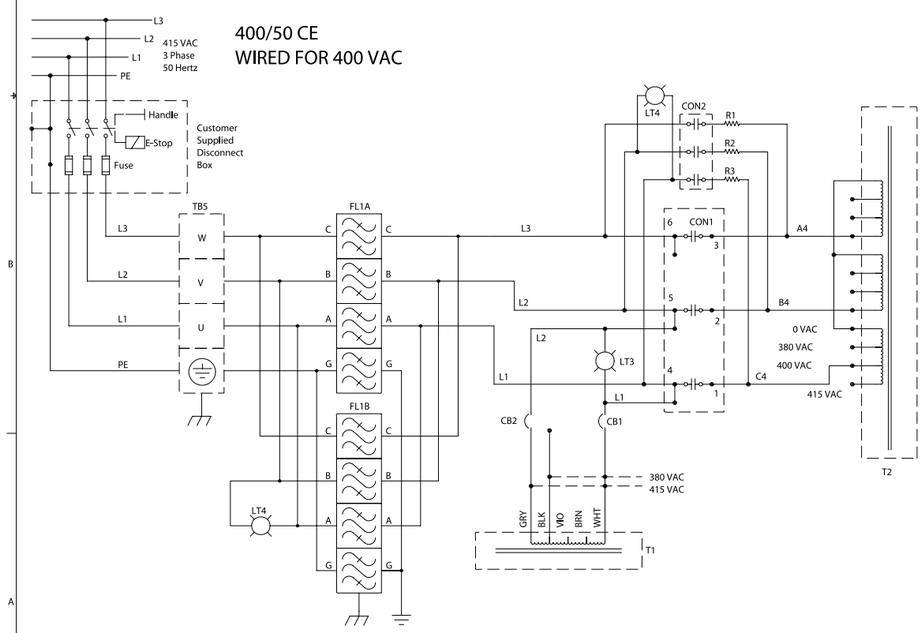

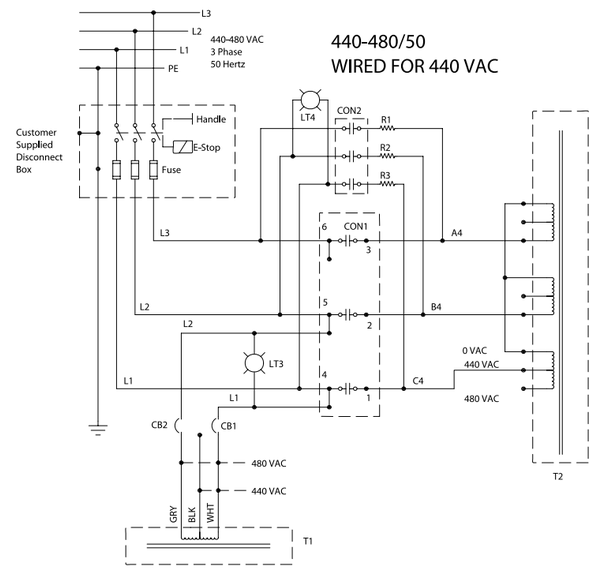

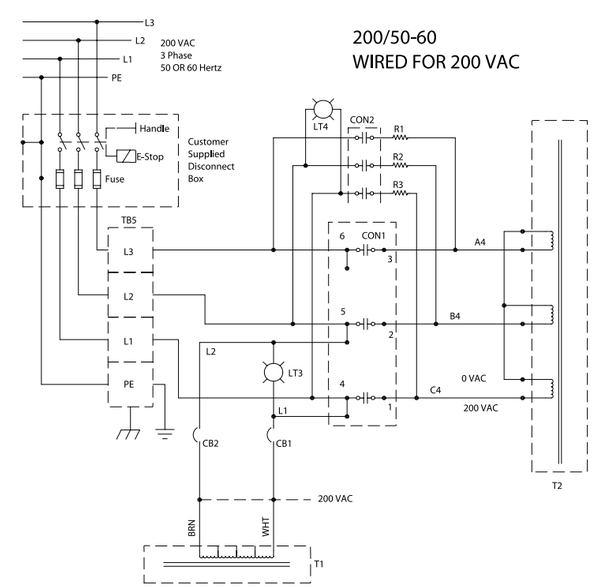

MATERIAL	DRAWN BY BC	DATE 12-10-93	Hypertherm
	CHECKED BY	DATE	Box-5010 Hanover, NH 03755-5010 603/643-3441
	APP. BY DJR	DATE 5-15-94	DESCRIPTION BLK DIAG:HT4001 KZ
THIS DRAWING AND ALL INFORMATION CONTAINED THEREON IS CONSIDERED PROPRIETARY AND MAY NOT BE USED FOR MANUFACTURING OR FABRICATION PURPOSES WITHOUT PERMISSION FROM HYPERTHERM, INC.	UNLESS OTHERWISE SPECIFIED: DIMENSIONS ARE IN INCHES. TOLERANCES ARE: 2 PL DECIMAL ±.01 3 PL DECIMAL ±.005 FRACTIONS ±1/64 ANGULAR ±.5= PART MUST BE FREE OF BURRS AND SHARP EDGES. BREAK SHARP EDGES IF NECESSARY WITH CHAMFER OR RADIUS .015.		ITEM NO. 013254 · DRAWING NO. 013-2-254 · FILE NAME 013254B12
			SCALE N/A · MODEL HT4001 · SHEET 12 OF 14

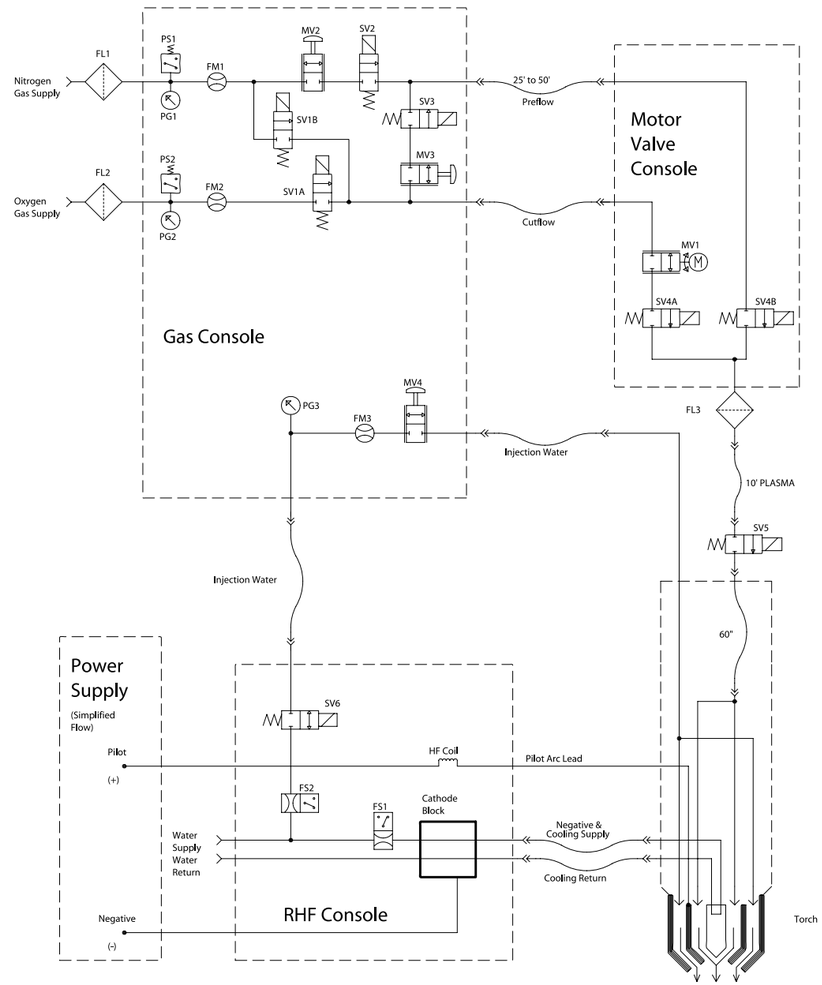

FL1	Filter, Nitrogen
FL2	Filter, Oxygen
FL3	Filter, Plasma Gas
FM1	Flow Meter, Nitrogen
FM2	Flow Meter, Oxygen
FM3	Flow Meter, Injection Water
FS1	Flow Switch, Cooling Water
FS2	Flow Switch, Injection Water
PG1	Pressure Gauge, Nitrogen Inlet
PG2	Pressure Gauge, Oxygen Inlet
PG3	Pressure Gauge, Injection
PS1	Pressure Switch, Nitrogen Inlet
PS2	Pressure Switch, Oxygen Inlet

MV1	Metering Valve, Plasma Motor
MV2	Metering Valve, N2 Preflow
MV3	Metering Valve, O2 Preflow
MV4	Metering Valve, Injection Water
SV1A	Solenoid Valve, O2 Cutflow
SV1B	Solenoid Valve, N2 Cutflow
SV2	Solenoid Valve, N2 Preflow
SV3	Solenoid Valve, O2 Preflow
SV4A	Solenoid Valve, Cutflow
SV4B	Solenoid Valve, Preflow
SV5	Solenoid Valve, Plasma OFF
SV6	Solenoid Valve, Injection Water

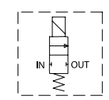

ALL VALVES SHOWN DE-ENERGIZED

MATERIAL

THIS DRAWING AND ALL INFORMATION CONTAINED THEREON IS CONSIDERED PROPRIETARY AND MAY NOT BE USED FOR MANUFACTURING OR FABRICATION PURPOSES WITHOUT PERMISSION FROM HYPERTHERM, INC.

DRAWN BY	BC	DATE	12-10-93
CHECKED BY		DATE	
APP. BY	DJR	DATE	5-15-94

UNLESS OTHERWISE SPECIFIED:
DIMENSIONS ARE IN INCHES.
TOLERANCES ARE:
2 PL DECIMAL ±.01
3 PL DECIMAL ±.005
FRACTIONS ±1/64
ANGULAR ±.5°
PART MUST BE FREE OF BURRS AND SHARP EDGES. BREAK SHARP EDGES IF NECESSARY WITH CHAMFER OR RADIUS .015.

Hypertherm
Box-5010 Hanover, NH 03755-5010 603/643-3441

DESCRIPTION: BLK DIAG:HT4001

KZ

ITEM NO.	DRAWING NO.	FILE NAME
013254	013-2-254	013254B13

SCALE	MODEL	SHEET
N/A	HT4001	13 OF 14

NITROGEN OPERATION TIMING CHART 0 TO 760 amp

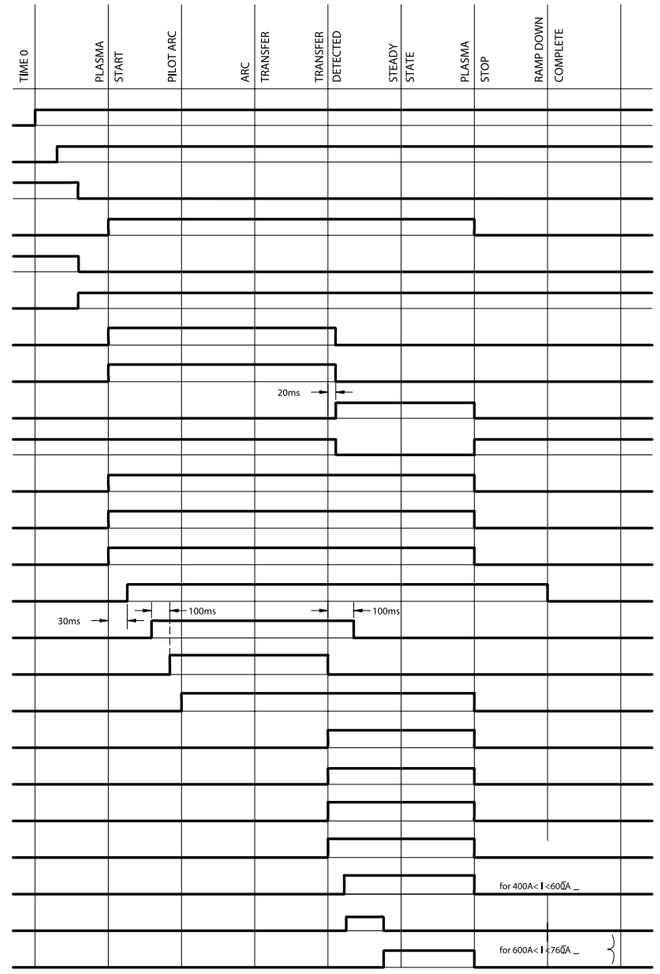

OXYGEN OPERATION TIMING CHART

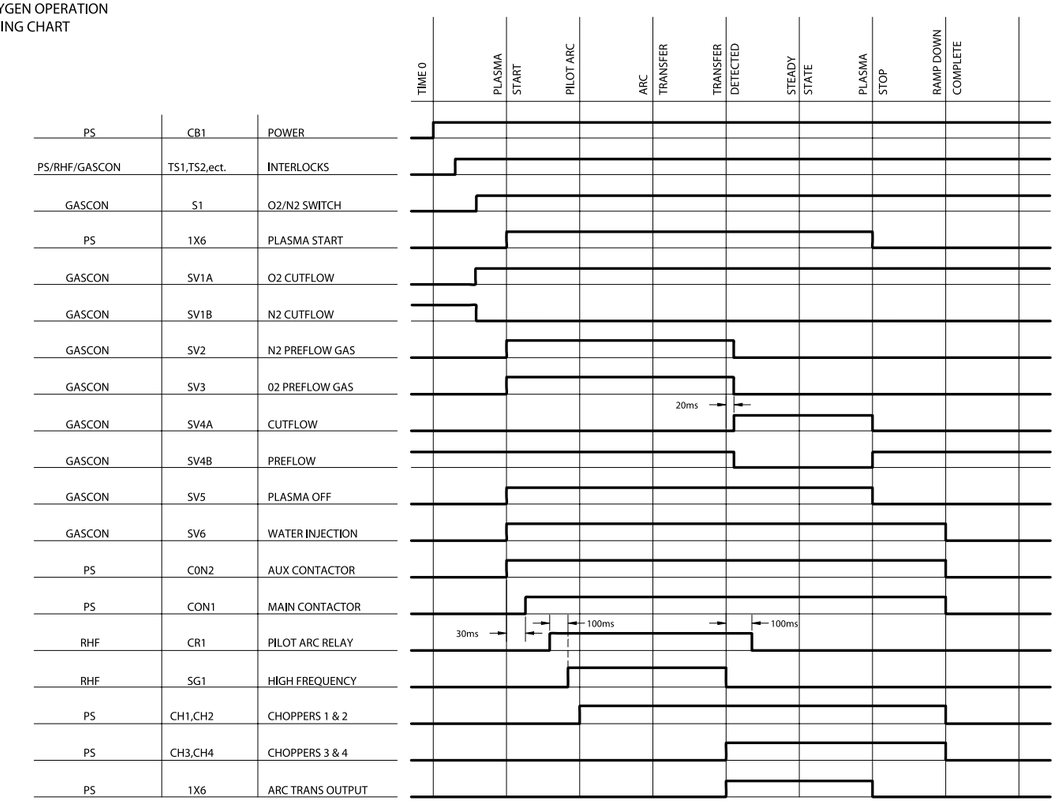

OXYGEN OPERATION CURRENT, PRESSURE, AND VOLTAGE WAVEFORMS

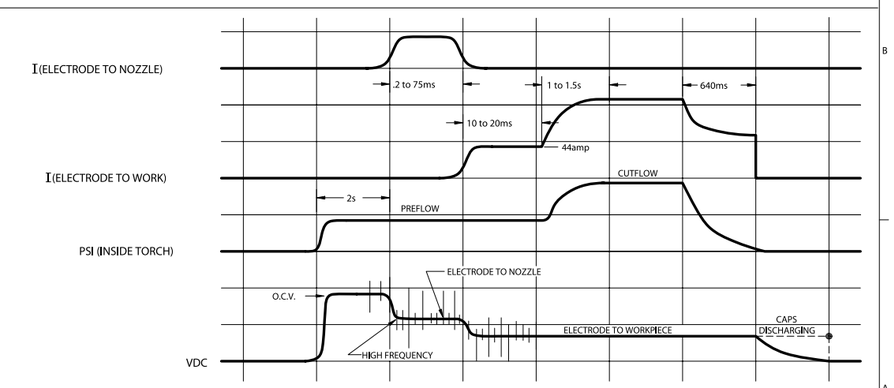

NITROGEN OPERATION CURRENT, PRESSURE, AND VOLTAGE WAVEFORMS

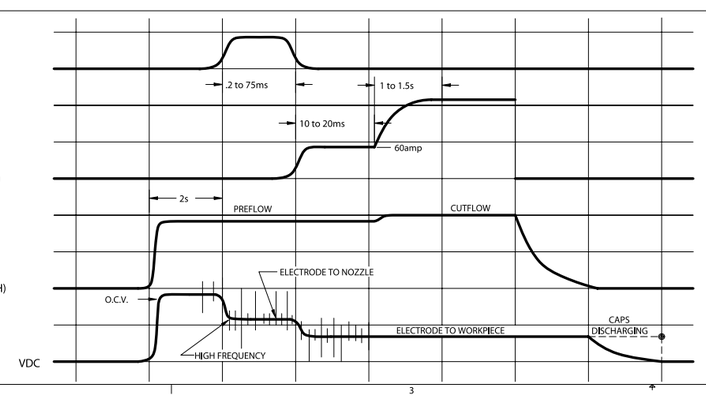

MATERIAL	DRAWN BY BC	DATE 12-10-93	Hypertherm Box-5010 Hanover, NH 03755-5010 603/643-3441
	CHECKED BY	DATE	
	APP. BY DJR	DATE 5-15-94	DESCRIPTION BLK DIAG:HT4001 KZ
THIS DRAWING AND ALL INFORMATION CONTAINED THEREON IS CONSIDERED PROPRIETARY AND MAY NOT BE USED FOR MANUFACTURING OR FABRICATION PURPOSES WITHOUT PERMISSION FROM HYPERTHERM, INC.	UNLESS OTHERWISE SPECIFIED: DIMENSIONS ARE IN INCHES. TOLERANCES ARE: 2 PL DECIMAL ±.01 3 PL DECIMAL ±.005 FRACTIONS ±1/64 ANGULAR ±.5= PART MUST BE FREE OF BURRS AND SHARP EDGES. BREAK SHARP EDGES IF NECESSARY WITH CHAMFER OR RADIUS .015.		ITEM NO. 013254 / DRAWING NO. 013-2-254 / FILE NAME 013254B14
			SCALE N/A / MODEL HT4001 / SHEET 14 OF 14

Hypertherm

Appendix A

H-401 POWER SUPPLY AS SLAVE

In this section:

H401 Slave Modification a-2
H401 Slave Connections a-6
Connecting the Power a-6

H401 Slave Modification

A PC board assembly must be added to the stock H401 power supply so that it can interface as a slave for the HT4001 system. Kit 128315 contains the necessary components to make this change:

Part No.	Description	Qty.
128315	**Kit:H401/601 Slave**	
008340	Standoff:8-32 X 1/4 Hex X 1" Lg Al	4
075022	M/S:8-32 X 3/8 PH PAN SST	4
041366	**PCB Assy:HT4001 Cur Set Pt**	1
023136	**Cable:4/0 1/2Lug 20'**	2
123377	**Cable:HT4001 Slave 25'**	1
129375	Harness: Kit 128315	1
802930	FSB: Slave Calibration	1

WARNING

Make all H401 power supply modifications before hooking up power cord.

Adding the Current Setpoint PCB to the H401 Slave – Fig. a-1

1. Remove both side panels and top panel to the H401 power supply.
2. Find the center wall of the H401 supply that supports the terminal strip.
3. Attach the Current Setpoint PCB to the center wall.

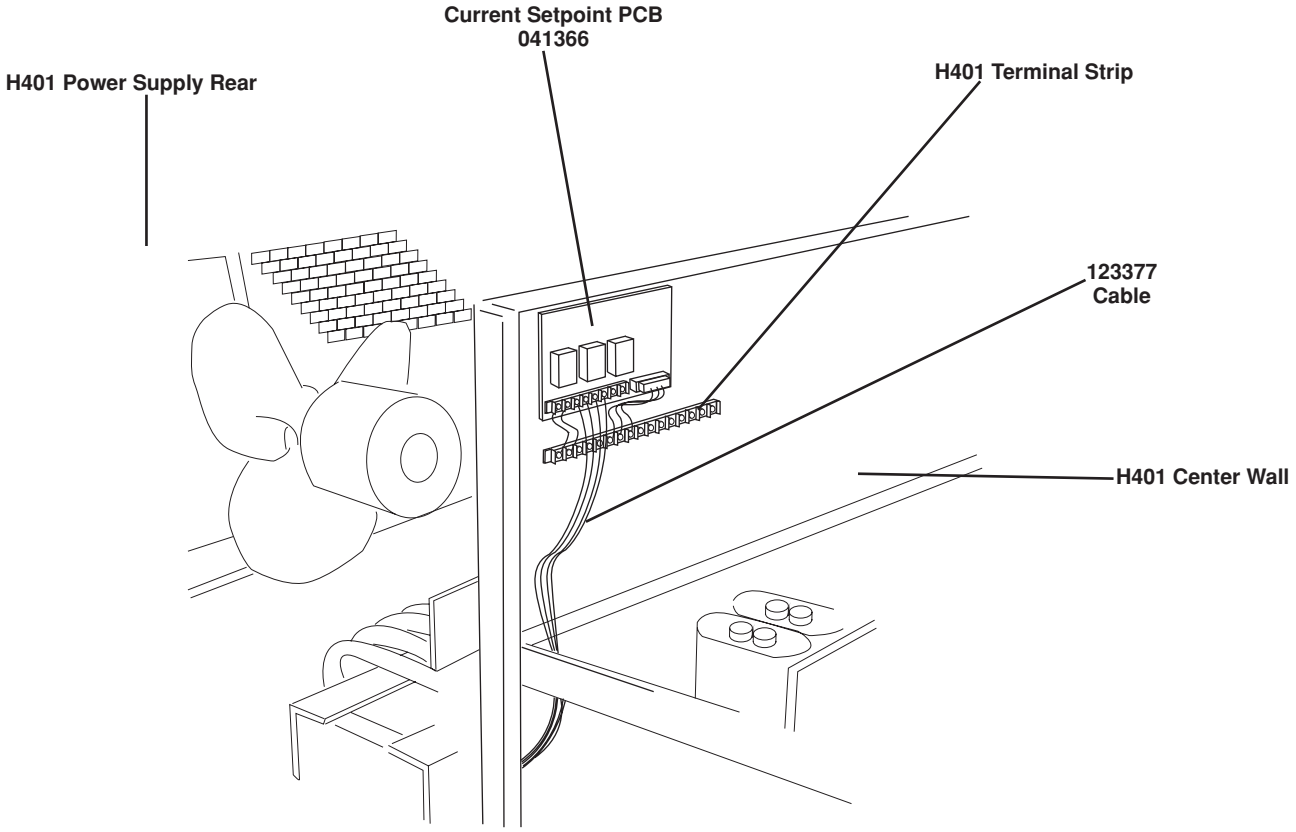

Note: Locations of current setpoint PCB and H401 terminal strip are approximate.

Figure a-1 Current Setpoint PCB Installation

Connecting the Slave Cable to the Current Setpoint PCB

1. Route the forked terminal end of the 123377 cable through the side or back of the H401 slave power supply and lay out approximately as shown in Fig. a-1.

2. Connect the fork terminals to the terminal strip (TB1) on the Current Setpoint PCB: from left to right, connect terminals 1, 2, 3, 4, 5, 6. See Fig. a-2.

Connecting the Slave Cable to the H401 Terminal Strip

1. Connect wires 57 and 58 from the 123377 harness to H401 terminal strip points 1 and 2 as shown in Fig. a-3a.

Removing H401 Current-Adjust Circuit

You must disable the current-adjust circuit in the H401 supply so that it can be used as a slave with the HT4001.

1. Remove jumper between H401 terminals 8 and 9 and install jumper across terminals 7 and 8. See Figure a-3a.

Connecting the Current Setpoint PCB harness from REC1 to the H401 Terminal Strips

1. Connect wire harness 129375 from REC1 of the Current Setpoint PCB (Fig. a-2) to H401 terminal locations as shown in Fig. a-3a.

Removing H401 Surge-Injection Circuit

You must disable the surge-injection circuit in the H401 supply so that it can be used as a slave with the HT4001.

1. Remove wires 114 and 111 from the power supply circuit. Wires are located either on the floor of the power supply or on the rear center wall of the power supply between the surge injection circuit. Use page 10 of 14 of the wiriing diagrams in section 8 for reference.

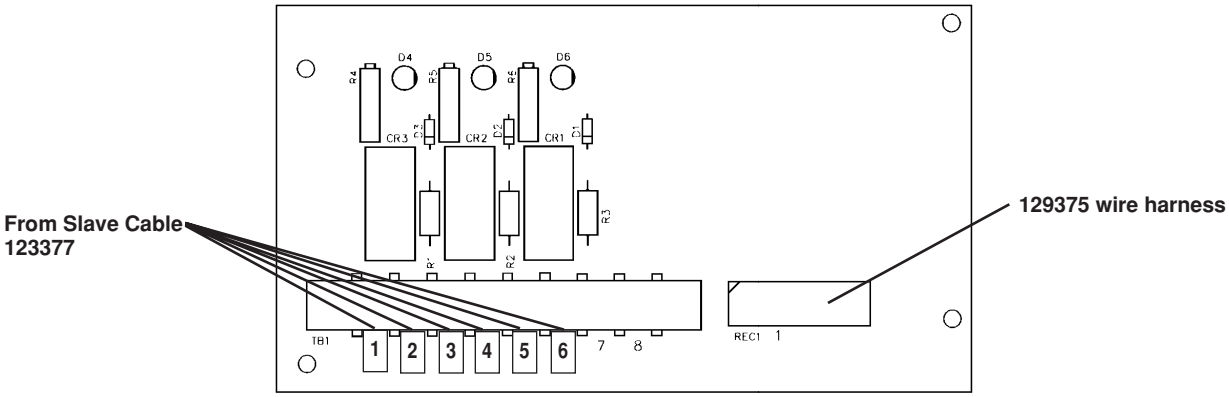

Figure a-2 Current Setpoint PCB Connections

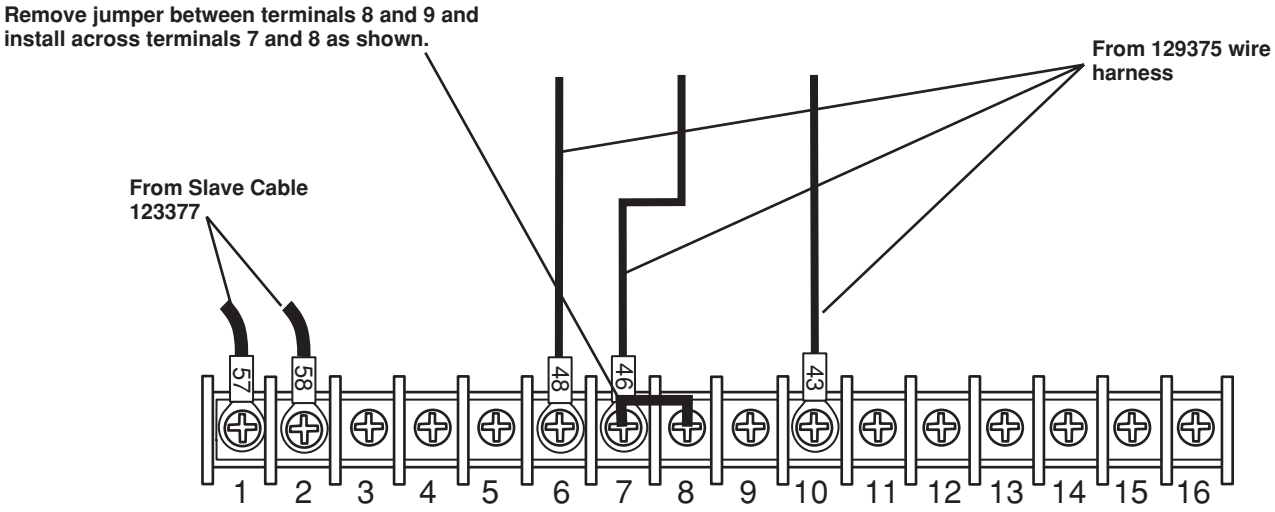

Figure a-3a Terminal Strip Connections

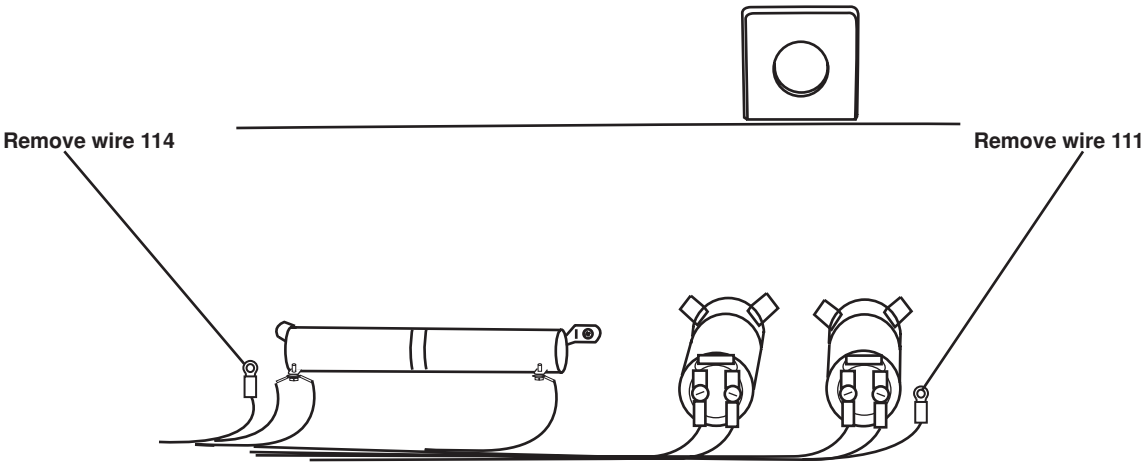

Figure a-3b Removing H401 Surge Injection Circuit

H401 Slave Connections

Connecting the Power

See IM41: H401 & H601 Power Supply for power cabling requirements.

Power Cable to H401 Power Supply – Fig. a-4

1. Insert the power cable through the strain relief at the lower left rear of the power supply.

2. Connect the power leads to terminals L1, L2 and L3 located on the center wall of the power supply. See Fig. a-4.

3. Connect the ground to the designated ground point ⏚ in the power supply.

Power Cable from H401 Power Supply to Power Source

⚠	**WARNING**
The line disconnect switch must be in the OFF position before making the power cord connections!	

1. The line disconnect switch must be in the OFF position!

2. Connect the power cord leads to the line disconnect switch following local and applicable electrical codes.

⚠	**WARNING**
The line disconnect switch must remain in the OFF position during the rest of the installation of the H401 power supply.	

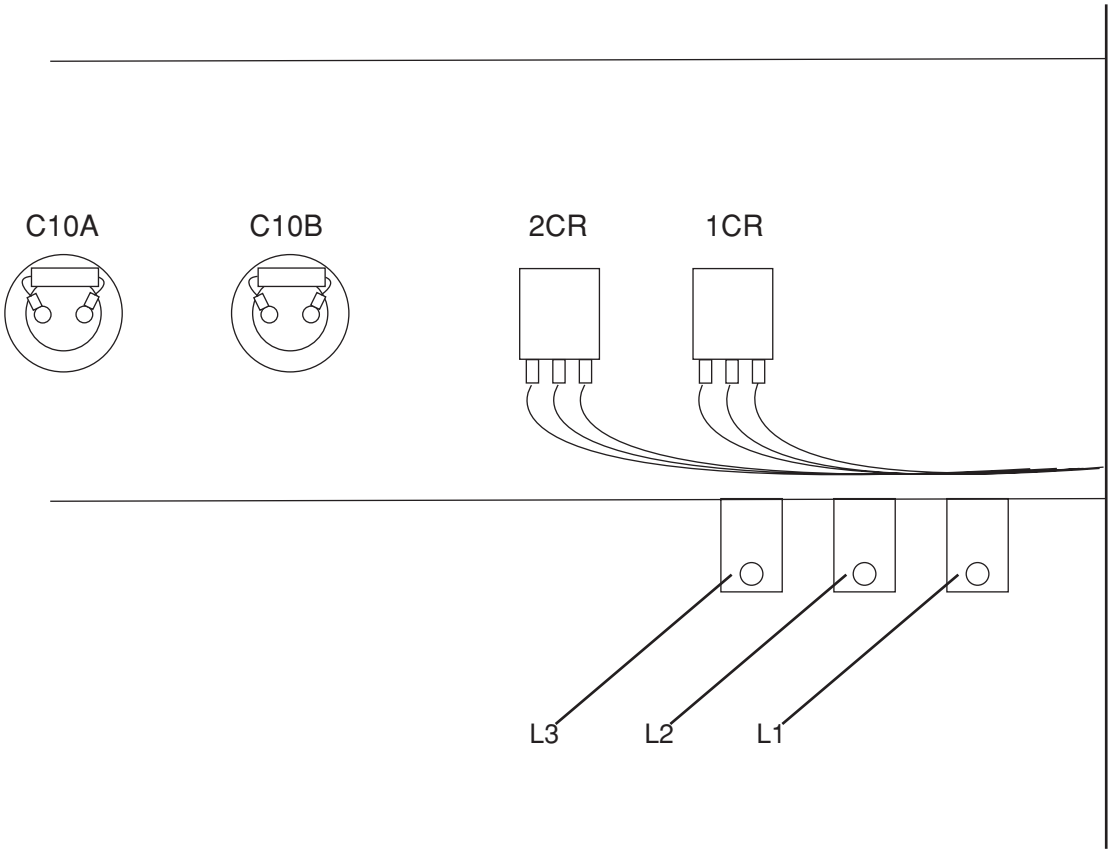

Figure a-4 H401 Power Cable Connections – Center Wall Rear

H401 Slave Connections (cont.)

30 *Slave Cable – HT4001 Power Supply to H401 Power Supply – Fig. a-5*

- Connect the 1X8 end of the slave cable to the 1X8 connector on the HT4001 power supply.

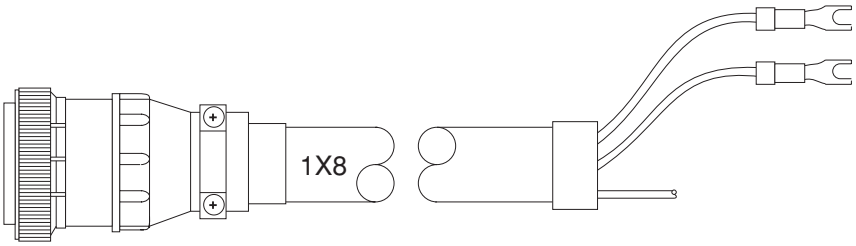

Part No.	Length
123377	25 ft (7,6 m)

HT4001 PS END 1x8	COLOR	H-401 CURRENT SETPOING END	DESCRIPTION
1	Red	2	Slave/Plasma On
5	Black	1	Slave/Plasma On
10	Drain	–	PE
2	Green	4	200A
6	Black	3	200A
11	Drain	–	PE
3	White	6	400A
7	Black	5	400A
12	Drain	–	PE
4 ┐		20	Slave Cable
8 ┘		7	Detect

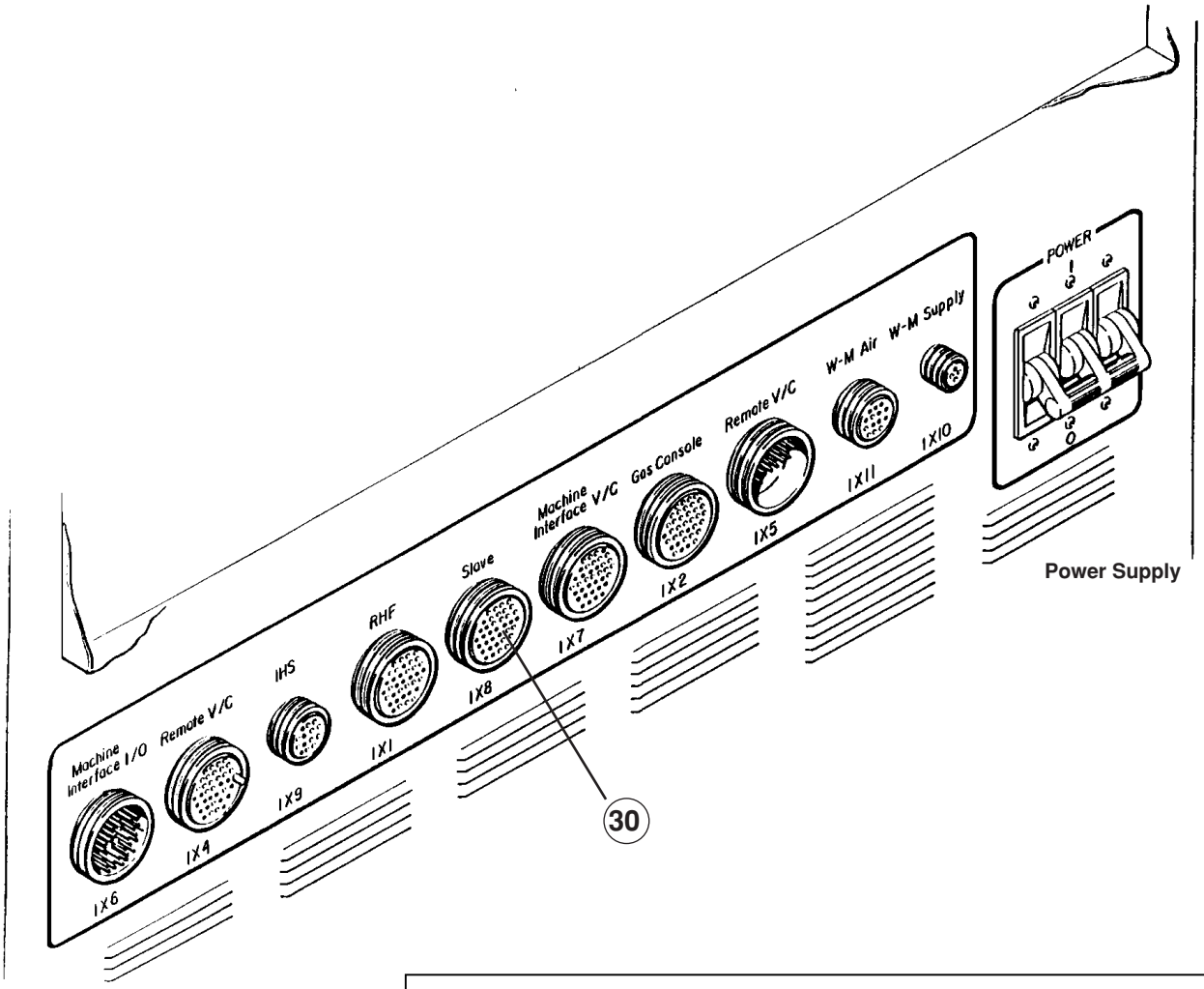

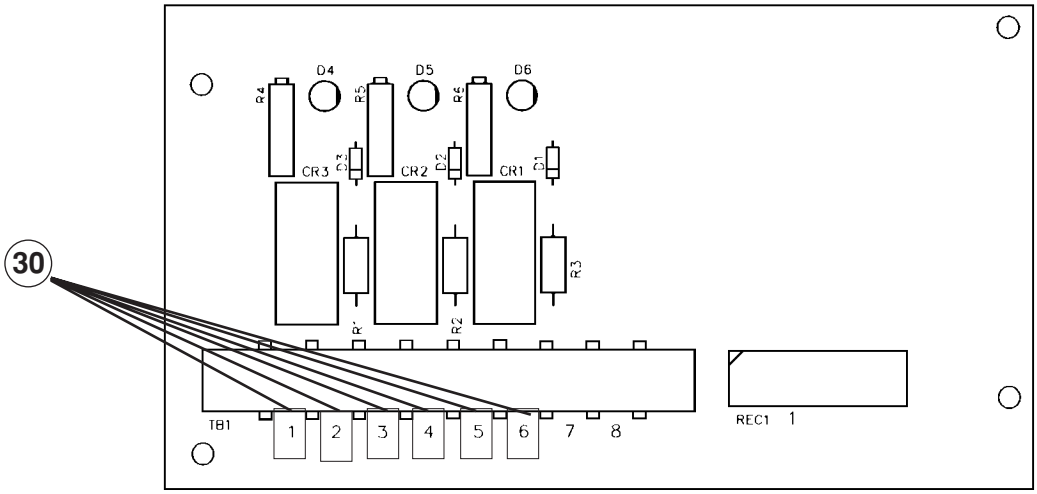

Current Setpoint PCB in H401 Power Supply
– See pg. a-4 for more details of connections.

Figure a-5 Slave Cable – HT4001 Power Supply to H401 Slave Power Supply

H401 Slave Connections (cont.)

When using the H401 Slave, a positive and negative lead must connect the HT4001 to the H401. Two 25-foot cables (023136) come with the 077011 kit for this purpose.

Also, an additional positive lead must run from the positive bus bar in the HT4001 power supply to the work table, and an additional negative lead must run from the negative bus bar in the HT4001 power supply to the cathode block of the RHF console.

Refer to Fig. a-6.

(31) ***Positive Lead – HT4001 Power Supply to H401 Power Supply***

(32) ***Negative Lead – HT4001 Power Supply to H401 Power Supply***

(33) ***Positive Lead – HT4001 Power Supply to Work Table***

(34) ***Negative Lead – HT4001 Power Supply to RHF Console***

Part No.	Length	Part No.	Length
023136	20 ft (6 m)	023124	75 ft (23 m)
023078	25 ft (7.5 m)	023080	100 ft (30.5 m)
023101	30 ft (9 m)	023081	150 ft (46 m)
023135	40 ft (12 m)	023316	180 ft (55 m)
023079	50 ft (15 m)	023188	200 ft (61 m)

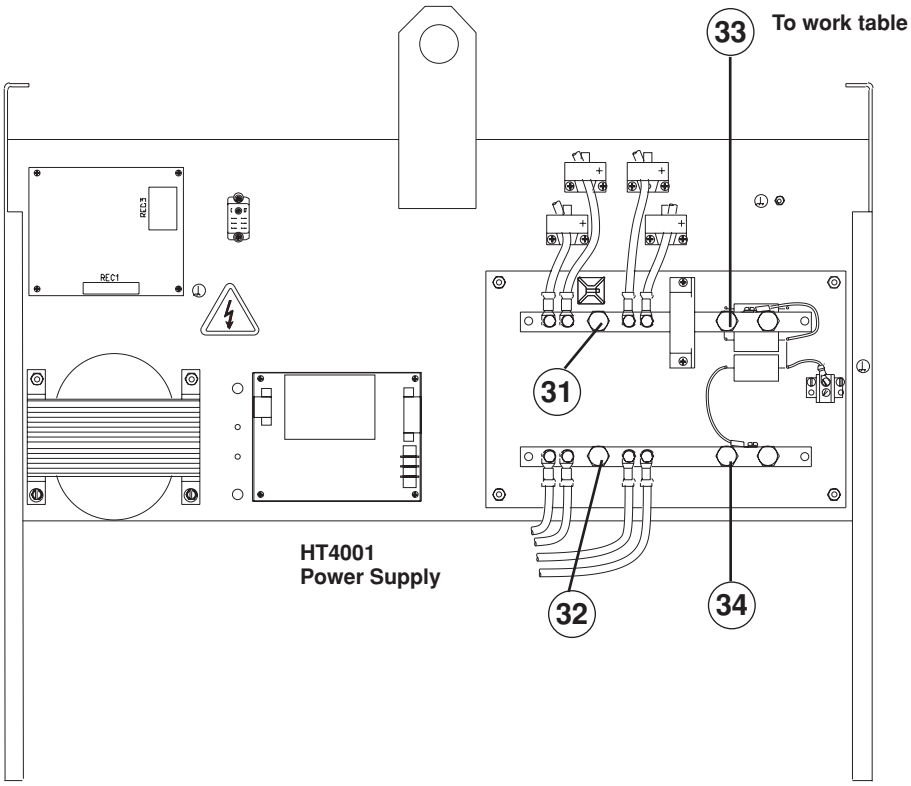

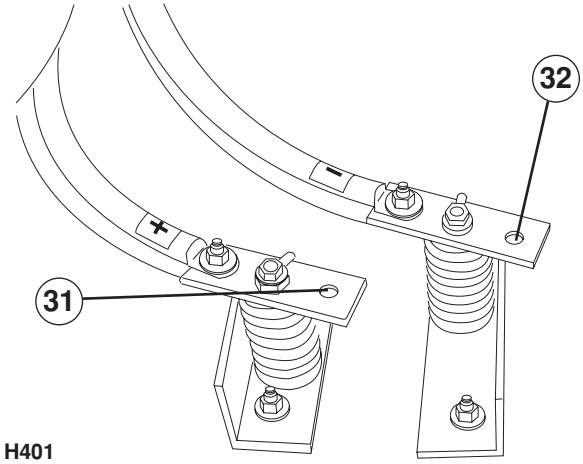

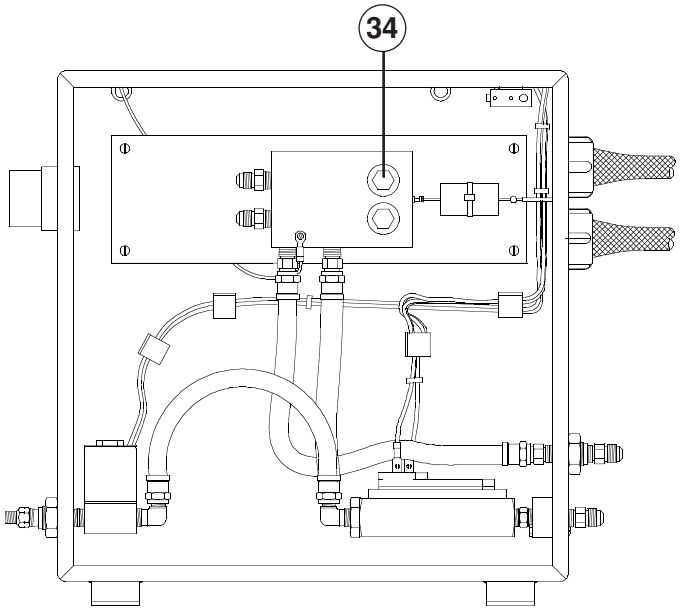

Figure a-6 Slave Connections – HT4001 Power Supply to H401 Slave Power Supply/ HT4001 Power Supply to Work Table and RHF Console

Appendix B

AERATION MANIFOLD FOR PLASMA CUTTING ALUMINUM

In this section:

Aeration Manifold for Plasma Cutting Aluminum b-2
Introduction b-2
Making an Aeration Manifold.....b-2

Aeration Manifold for Plasma Cutting Aluminum

Introduction

When plasma arc cutting aluminum, free hydrogen gas may be generated by the cutting process. The high temperature of the plasma process causes disassociation of oxygen and hydrogen from the water in the water table. The hot aluminum, which has a high affinity for oxygen, then combines with the oxygen leaving free hydrogen.

An effective means of avoiding free hydrogen buildup is to install an aeration manifold on the floor of the water table to replenish the oxygen content of the water.

Making an Aeration Manifold – Figure b-1

Make an **Aeration Manifold** with two-inch (50 mm) PVC tubing with one-inch (25 mm) **Distribution Lines** connected to it. Drill 1/8 inch (3 mm) holes every six inches (150 mm) in the distribution lines. Cap the ends of the distribution lines and install the lines so that oxygen is delivered to all parts of the cutting area.

Connect the manifold to a shop air line. Set a pressure regulator to obtain a steady stream of bubbles.

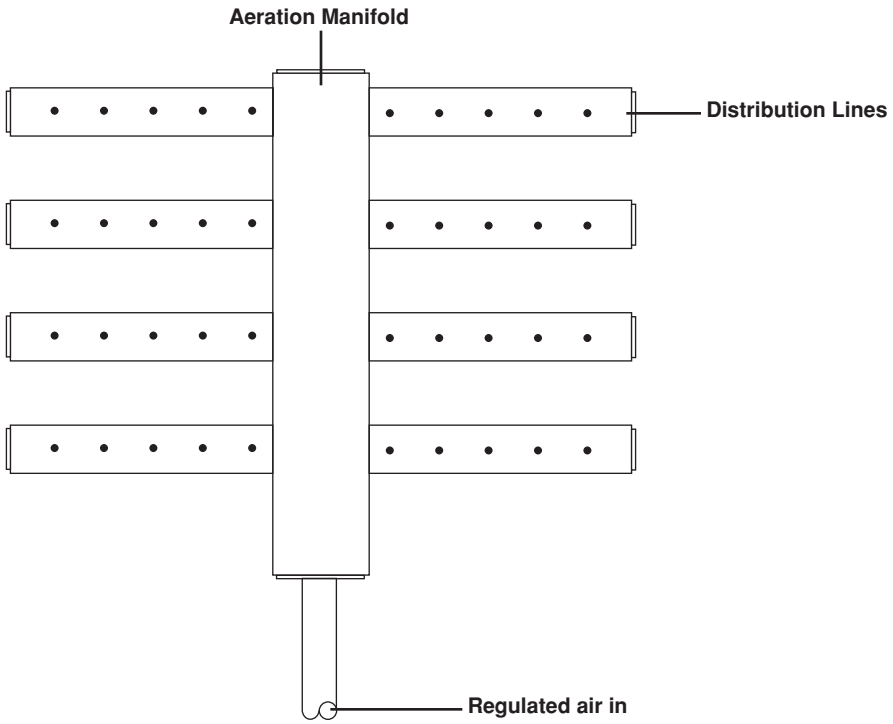

Figure b-1 Aeration Manifold

Hypertherm

Appendix C

ELECTROMAGNETIC COMPATIBILITY (EMC)

In this section:

EMC Introduction c-2
General c-3
Power Cable c-3
Connect Power Cable c-3
    Power Supply c-3
    Line Disconnect Switch c-5
EMI Filter Parts List c-6

EMC INTRODUCTION

This plasma cutting equipment has been built in compliance with standard EN50199. To ensure that the equipment works in a compatible manner with other radio and electronic systems, the equipment should be installed and used in accordance with the information below to achieve electromagnetic compatibility.

The limits required by EN50199 may not be adequate to completely eliminate interference when the affected equipment is in close proximity or has a high degree of sensitivity. In such cases it may be necessary to use other measures to further reduce interference.

This plasma equipment should be used only in an industrial environment. It may be difficult to ensure electromagnetic compatibility in a domestic environment.

INSTALLATION AND USE

The user is responsible for installing and using the plasma equipment according to the manufacturers instructions.
If electromagnetic disturbances are detected then it shall be the responsibility of the user to resolve the situation with the technical assistance of the manufacturer. In some cases this remedial action may be as simple as earthing the cutting circuit, see *Earthing of Workpiece*. In other cases it could involve constructing an electromagnetic screen enclosing the power source and the work complete with associated input filters. In all cases electromagnetic disturbances must be reduced to the point where they are no longer troublesome.

ASSESSMENT OF AREA

Before installing the equipment the user shall make an assessment of potential electromagnetic problems in the surrounding area. The following shall be taken into account:

a. Other supply cables, control cables, signalling and telephone cables; above, below and adjacent to the cutting equipment.
b. Radio and television transmitters and receivers.
c. Computer and other control equipment.
d. Safety critical equipment, for example guarding of industrial equipment.
e. Health of the people around, for example the use of pacemakers and hearing aids.
f. Equipment used for calibration or measurement.
g. Immunity of other equipment in the environment. User shall ensure that other equipment being used in the environment is compatible. This may require additional protection measures.
h. Time of day that cutting or other activities are to be carried out.

The size of the surrounding area to be considered will depend on the structure of the building and other activities that are taking place. The surrounding area may extend beyond the boundaries of the premises.

METHODS OF REDUCING EMISSIONS

Mains Supply

Cutting equipment should be connected to the mains supply according to the manufacturers recommendations. If interference occurs, it may be necessary to take additional precautions such as filtering of the mains supply. Consideration should be given to shielding the supply cable of permanently installed cutting equipment, in metallic conduit or equivalent. Shielding should be electrically continuous throughout its length. The shielding should be connected to the cutting mains supply so that good electrical contact is maintained between the conduit and the cutting power source enclosure

Maintenance of Cutting Equipment

The cutting equipment should be routinely maintained according to the manufacturers recommendations. All access and service doors and covers should be closed and properly fastened when the cutting equipment is in operation. The cutting equipment should not be modified in any way except for those changes and adjustments covered in the manufacturers instructions. In particular, the spark gaps of arc striking and stabilizing devices should be adjusted and maintained according to the manufacturer's recommendations.

Cutting Cables

The cutting cables should be kept as short as possible and should be positioned close together, running at or close to the floor level.

Equipotential Bonding

Bonding of all metallic components in the cutting installation and adjacent to it should be considered. However, metallic components bonded to the workpiece will increase the risk that the operator could receive a shock by touching these metallic components and the electrode at the same time. The operator should be insulated from all such bonded metallic components.

Earthing of Workpiece

Where the workpiece is not bonded to earth for electrical safety, nor connected to earth because of its size and position, for example, ship's hull or building steelwork, a connection bonding the workpiece to earth may reduce emissions in some, but not all instances. Care should be taken to prevent the earthing of the workpiece increasing the risk of injury to users, or damage to other electrical equipment. Where necessary, the connection of the workpiece to earth should be made by a direct connection to the workpiece, but in some countries where direct connection is not permitted, the bonding should be achieved by suitable capacitances selected according to national regulations.

Note. The cutting circuit may or may not be earthed for safety reasons. Changing the earthing arrangements should only be authorized by a person who is competent to assess whether the changes will increase the risk of injury, for example, by allowing parallel cutting current return paths which may damage the earth circuits of other equipment. Further guidance is given in IEC TC26 (sec)94 and IEC TC26/108A/CD Arc Welding Equipment Installation and Use.

Screening and Shielding

Selective screening and shielding of other cables and equipment in the surrounding area may alleviate problems of interference. Screening of the entire plasma cutting installation may be considered for special applications

General

This appendix will enable a qualified electrician to install the power cable to the EMI filter on all CE 380/415 volt power supplies (077022, 077023).

Power Cable

The power cable is **customer supplied**. See *Power Cables* on page 3-5 for recommended cable sizes. Final specification and installation of the power cord should be made by a licensed electrician and according to applicable national or local codes. See also *Mains Supply* on page c-2 for further power (supply) cable shielding recommendations.

Connect Power Cable

Connect one end of the power cable to the EMI filter first and then connect the other end to the line disconnect switch.

Power Supply

1. Locate the EMI filter box on the top rear of the power supply (see Figure c-1).

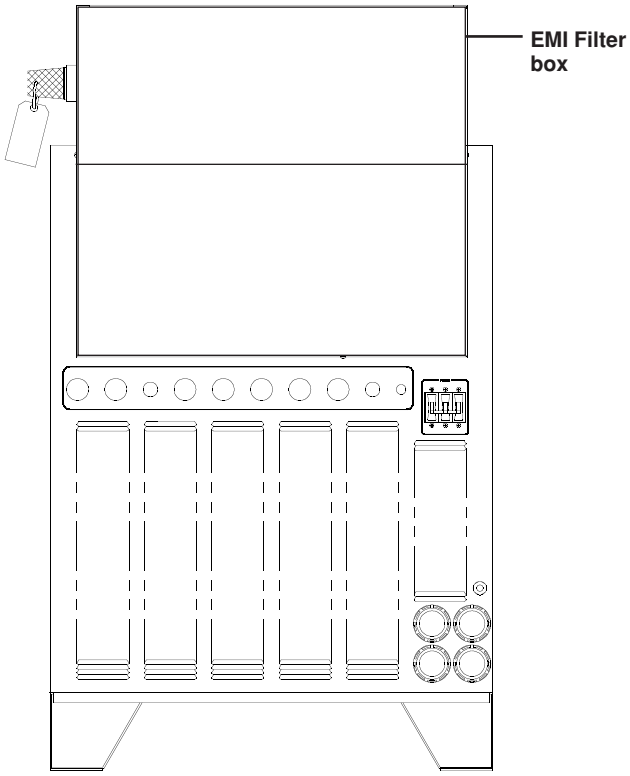

Figure c-1 HT4001 Power Supply with EMI Filter Box – Rear View

2. Unscrew the seven filter cover screws and remove cover to access input voltage connections at TB5 (see Figure c-2).

3. Insert the power cable through the strain relief (see Figure c-2).

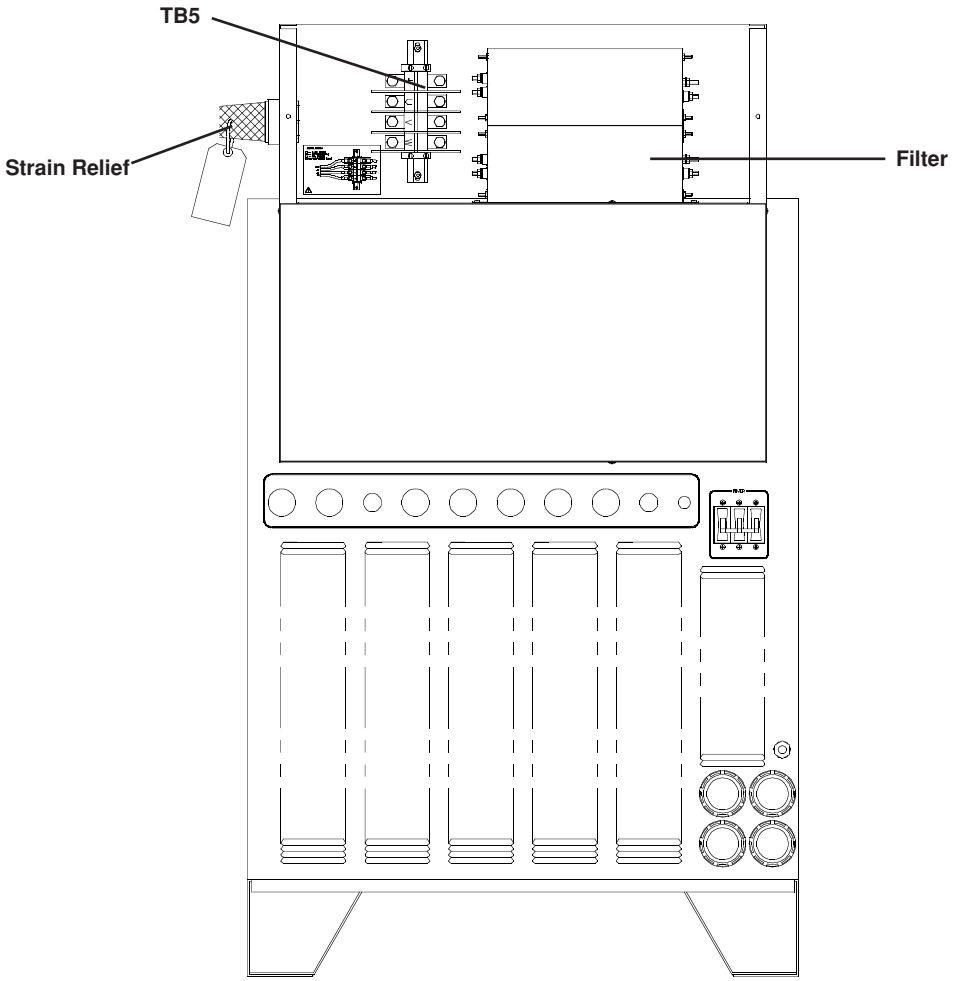

Figure c-2 HT4001 Power Supply with EMI Filter Cover Off

4. Connect leads L1 to U, L2 to V, and L3 to W terminals of TB5 (see Figure c-3). Ensure that all connections are tight to avoid excessive heating.

5. Connect the ground lead to terminal marked ⏚ at TB5 (see Figure c-3).

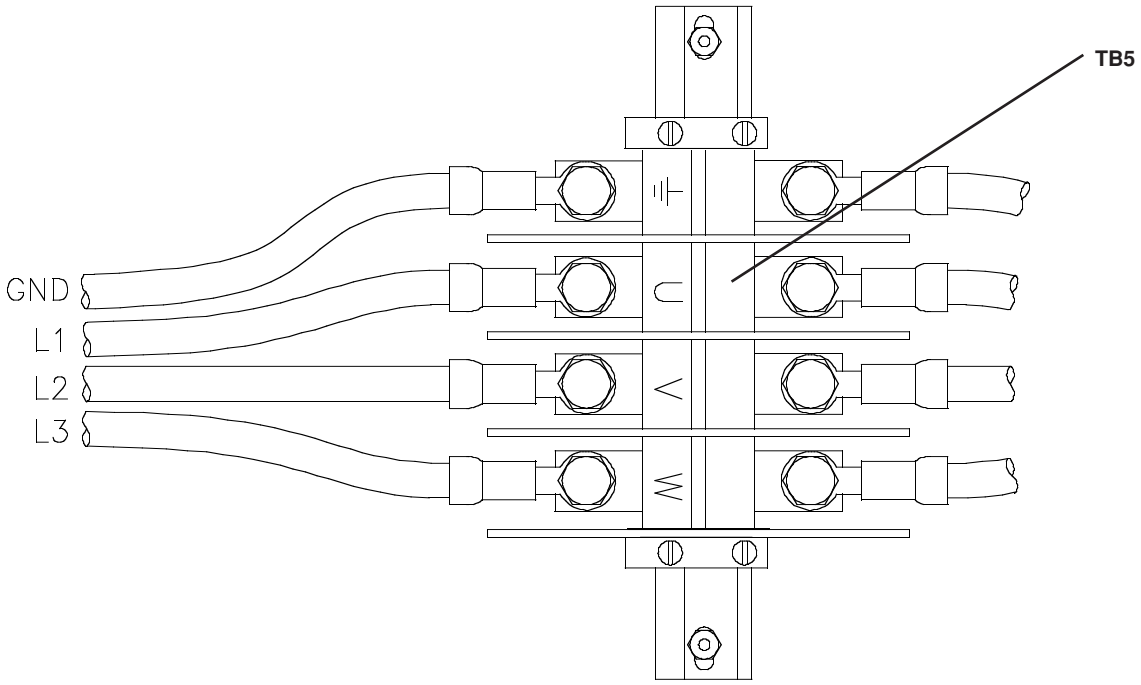

Figure c-3 Power Cable Connections to TB5

WARNING

There is line voltage at the filter as soon as the line disconnect switch is ON, even if the circuit breaker on the HT4001 power supply is OFF. As a common safety practice, ALWAYS verify that the line disconnect switch is in the OFF position before installing, disconnecting or servicing in this area.

Line Disconnect Switch

Connecting the power cable to the line disconnect switch must conform to national or local electrical codes. This work should be performed only by qualified, licensed personnel. See *Power Requirements* and *Line Disconnect Switch* on pages 3-4 and 3-5.

EMI Filter Parts List

Item	Number	Description	Qty.
1	001544	Shelf:HT4001-CE Rear Box	1
2	001545	Divider:HT4001-CE Rear Box	1
3	001548	Rear Box :HT4001-CE Contactor/Filter	1
4	129015	Terminal Block SA:HT4001-CE Dual Filter	1
5	129016	Electronic Filter SA:HT4001-CE	1
*	001546	Upper Cover:HT4001-CE Rear Box	1
*	001547	Lower Cover:HT4001-CE Rear Box	1
*	002255	Cover, Lifting Eye	1

* Not shown.

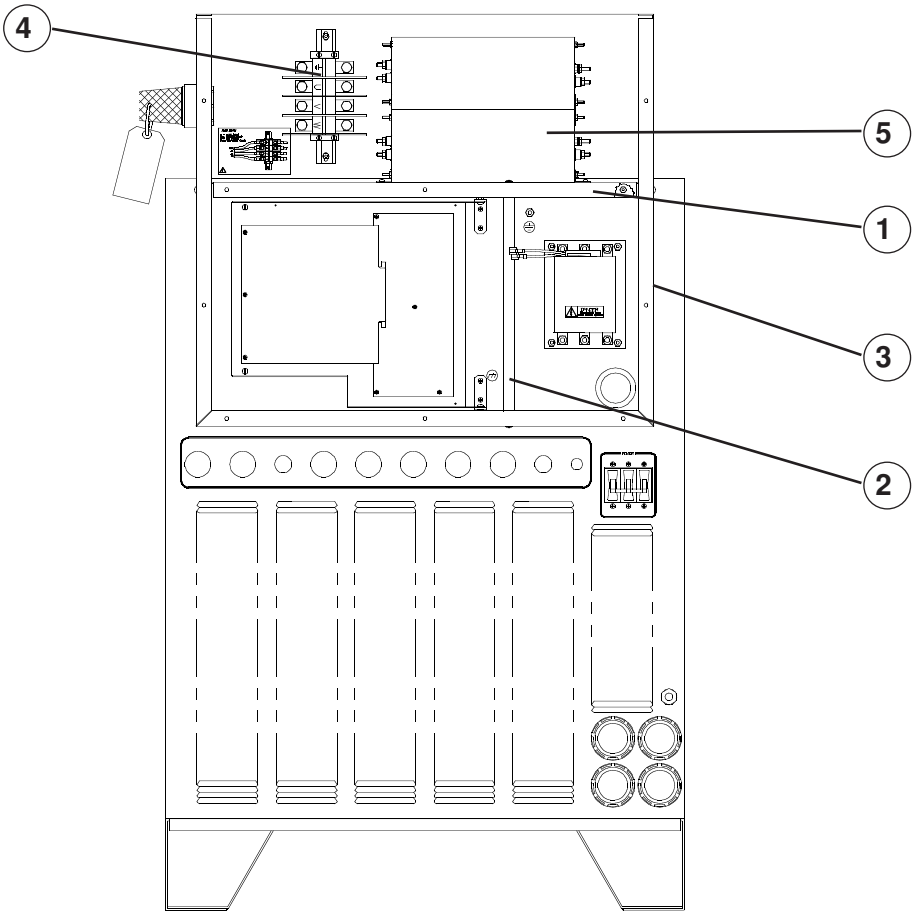

Figure c-4 HT4001 EMI Filter Parts

Hypertherm

Appendix D

Power Cable Installation for 200/220V Power Supplies

Power Supply

General d-2
Power Cable d-2
Connect Power Cable d-2
Power Supply d-2
Line Disconnect Switch d-4

General

This appendix will enable a qualified electrician to install the power cable to terminal block TB5 on all 200/220 volt power supplies (077002, 077016).

Power Cable

The power cable is **customer supplied**. See *Power Cables* on page 3-5 for recommended cable sizes. Final specification and installation of the power cord should be made by a licensed electrician and according to applicable national or local codes.

Connect Power Cable

Connect one end of the power cable to the terminal block first and then connect the other end to the line disconnect switch.

Power Supply

1. Locate the terminal box on the top rear of the power supply (see Figure d-1).

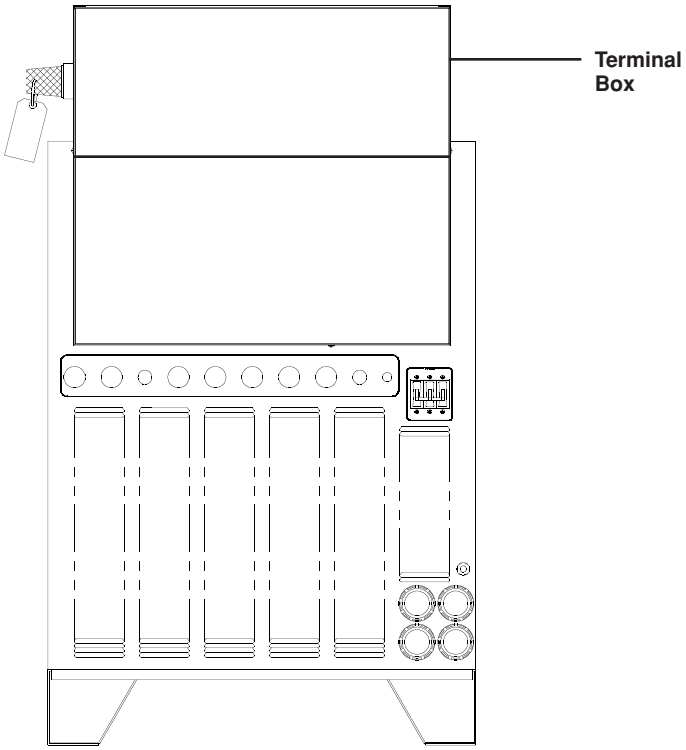

Figure d-1 HT4001 Power Supply with Terminal Box – Rear View

2. Unscrew the seven filter cover screws and remove cover to access input voltage connections at TB5 (see Figure d-2).

3. Insert the power cable through the strain relief (see Figure d-2).

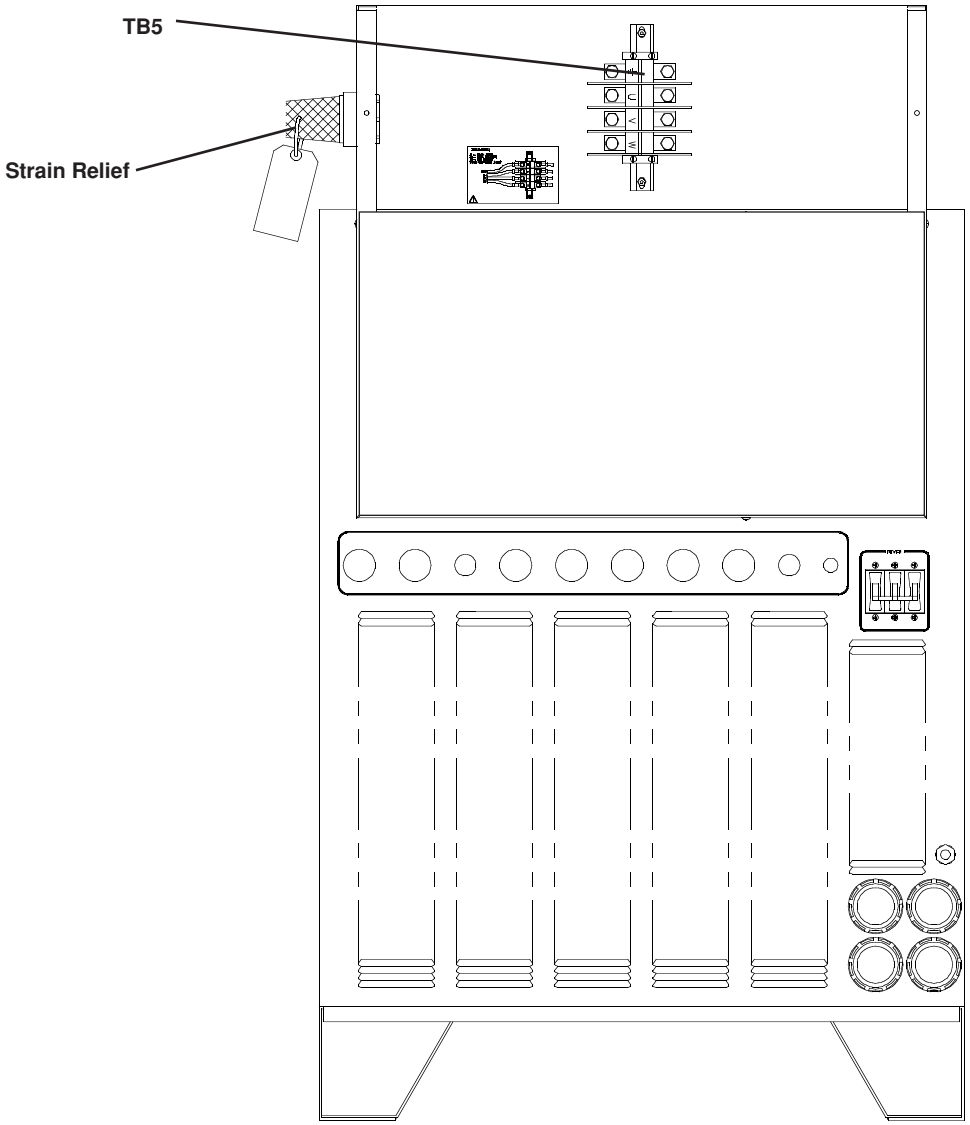

Figure d-2 HT4001 Power Supply with Terminal Box Cover Off

4. Connect the power leads to the U, V, and W terminals of TB5. Ensure that all connections are tight to avoid excessive heating.

5. Connect the ground lead to terminal marked with the ground symbol at TB5 (see Figure d-3).

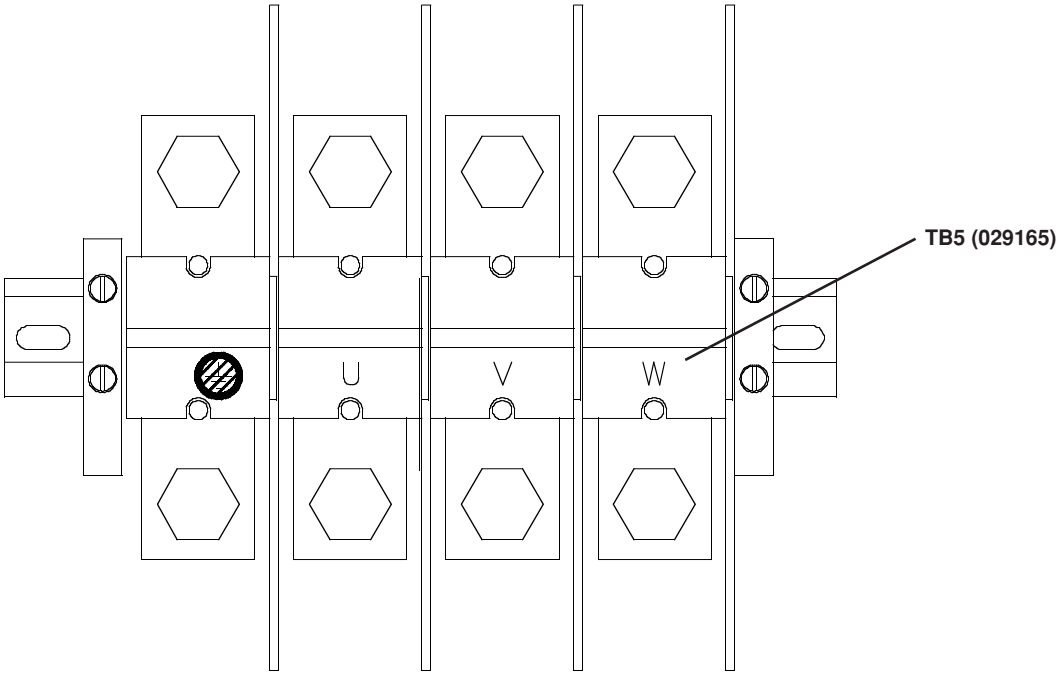

Figure d-3 Power Cable Connections to TB5

WARNING

There is line voltage at the terminal box as soon as the line disconnect switch is ON, even if the circuit breaker on the HT4001 power supply is OFF.. As a common safety practice, ALWAYS verify that the line disconnect switch is in the OFF position before installing, disconnecting or servicing in this area.

Line Disconnect Switch

Connecting the power cable to the line disconnect switch must conform to national or local electrical codes. This work should be performed only by qualified, licensed personnel. See *Power Requirements* and *Line Disconnect Switch* on pages 3-4 and 3-5.

Appendix E

PROPYLENE GLYCOL SAFETY DATA
BENZOTRIAZOLE SAFETY DATA

In this section:

Propylene Glycol Safety Data
Section 1 Chemical Product and Company Identification e-2
Section 2 Information on Ingredients e-2
Section 3 Hazards Identification e-2
Section 4 First Aid Measures e-3
Section 5 Fire Fighting Measures e-3
Section 6 Accidental Release Measures e-3
Section 7 Handling and Storage e-3
Section 8 Exposure Controls / Personal Protection e-4
Section 9 Physical and Chemical Properties e-4
Section 10 Stability and Reactivity e-4
Section 11 Toxicological Information e-4
Section 12 Ecological Information e-5
Section 13 Disposal Considerations e-5
Section 14 Transport Information e-5
Section 15 Regulatory Information e-5
Section 16 Other Information e-5

Benzotriazole (COBRATEC) Safety Data
Section I e-7
Section II Ingredients e-7
Section III Physical Data e-7
Section IV Fire and Explosion Hazard Data e-8
Section V Health Hazard Data e-8
Section VI Reactivity Data e-9
Section VII Spill or Leak Procedures e-9
Section VIII Special Protective Information e-9
Section IX Special Precautions e-10
Section X Regulatory Status e-10

MATERIAL SAFETY DATA SHEET

SECTION 1 -- CHEMICAL PRODUCT AND COMPANY IDENTIFICATION

PRODUCT NAME	HYPERTHERM TORCH COOLANT

PRODUCT CODE	

ISSUE DATE	11-22-96

EMERGENCY TELEPHONE NUMBERS

MANUFACTURER **HYPERTHERM**
STREET ADDRESS **Etna Rd.**
CITY, STATE, ZIP **Hanover, NH 03755**

Transportation: (703) 527-3887 *
*** For spill, leak, fire or transport accident emergencies.**
Product Information: (603) 643-5638

SECTION 2 -- COMPOSITION / INFORMATION ON INGREDIENTS

HAZARDOUS COMPONENT	CAS No.	% by wt.	EXPOSURE LIMITS OSHA PEL	ACGIH TLV	NIOSH REL
Propylene glycol	0057-55-6	< 50	None Established	None Established	None Established

SECTION 3 -- HAZARDS IDENTIFICATION

EMERGENCY OVERVIEW	Can cause eye and skin irritation. Harmful if swallowed..

POTENTIAL HEALTH EFFECTS	
INGESTION	Can cause irritation, nausea, stomach distress, vomiting and diarrhea.
INHALATION	May cause mild irritation of nose, throat, and respiratory tract.
EYE CONTACT	Causes eye irritation.
SKIN CONTACT	Prolonged or repeated contact may cause skin irritation.

SECTION 4 -- FIRST AID MEASURES

INGESTION	DO NOT induce vomiting, but give one or two glasses of water to drink and get medical attention.
INHALATION	No specific treatment is necessary, since this material is not likely to be hazardous by inhalation.
EYE CONTACT	Immediately flush eye with cool running water for 15 minutes. If irritation persists, get medical attention.
SKIN CONTACT	Wash with soap and water. If irritation develops or persists, get medical attention.
NOTE TO PHYSICIAN	Treatment based on judgment of the physician in response to reactions of the patient.

SECTION 5 -- FIRE FIGHTING MEASURES

FLASH POINT / METHOD	None / N.A.	FLAMMABLE LIMITS	Not flammable or combustible
EXTINGUISHING MEDIA	If involved in a fire, use foam, carbon dioxide or dry chemical extinguisher. Water may cause frothing.		
SPECIAL FIRE FIGHTING PROCEDURES	None		
FIRE AND EXPLOSION HAZARDS	None		

SECTION 6 -- ACCIDENTAL RELEASE MEASURES

RESPONSE TO SPILLS	Small spills: Flush into a sanitary sewer. Mop up residue and rinse area thoroughly with water. Large spills: Dike or dam the spill. Pump into containers or soak up on inert absorbent.

SECTION 7 -- HANDLING AND STORAGE

HANDLING PRECAUTIONS	Keep container in upright position.
STORAGE PRECAUTIONS	Store in a cool dry place. Keep from freezing.

SECTION 8 -- EXPOSURE CONTROLS / PERSONAL PROTECTION

HYGIENIC PRACTICES	Normal procedures for good hygiene.
ENGINEERING CONTROLS	Good general ventilation should be sufficient to control airborne levels. Facilities using this product should be equipped with an eyewash station.

PERSONAL PROTECTIVE EQUIPMENT

X	**RESPIRATOR**	Recommended for prolonged use in confined areas with poor ventilation
X	**GOGGLES / FACE SHIELD**	Recommended; goggles should protect against chemical splash
	APRON	Not necessary
X	**GLOVES**	Recommended; PVC, Neoprene or Nitrile acceptable
	BOOTS	Not necessary

SECTION 9 -- PHYSICAL AND CHEMICAL PROPERTIES

APPEARANCE	Clear liquid	BOILING POINT	160 deg F
ODOR	Not Appreciable	FREEZING POINT	Not established
pH	4.6-5.0(100% concentrate)	VAPOR PRESSURE	Not applicable
SPECIFIC GRAVITY	1.0	VAPOR DENSITY	Not applicable
SOLUBILITY IN WATER	Complete	EVAPORATION RATE	Not determined

SECTION 10 -- STABILITY AND REACTIVITY

CHEMICAL STABILITY		**STABLE**	X		**UNSTABLE**	
CONDITIONS TO AVOID	No special precautions beyond standard safe industrial practices.					
INCOMPATIBILITY	Avoid contact with strong mineral acids and strong oxidizers, including chlorine bleach.					
HAZARDOUS PRODUCTS OF DECOMPOSITION	Carbon monoxide may be formed during combustion.					
POLYMERIZATION		**WILL NOT OCCUR**	X		**MAY OCCUR**	
CONDITIONS TO AVOID	Not applicable					

SECTION 11 -- TOXICOLOGICAL INFORMATION

CARCINOGENICITY

	THIS PRODUCT CONTAINS A KNOWN OR SUSPECTED CARCINOGEN
X	**THIS PRODUCT DOES NOT CONTAIN ANY KNOWN OR ANTICIPATED CARCINOGENS ACCORDING TO THE CRITERIA OF THE NTP ANNUAL REPORT ON CARCINOGENS AND OSHA 29 CFR 1910, Z**

OTHER EFFECTS

ACUTE	Not determined
CHRONIC	Not determined

SECTION 12 -- ECOLOGICAL INFORMATION

BIODEGRADABILITY		CONSIDERED BIODEGRADABLE	X		NOT BIODEGRADABLE	
BOD / COD VALUE	Not established					
ECOTOXICITY	No data available					

SECTION 13 -- DISPOSAL CONSIDERATIONS

WASTE DISPOSAL METHOD	Product that cannot be used according to the label must be disposed of as a hazardous waste at an approved hazardous waste management facility. Empty containers may be triple rinsed, then offered for recycling or reconditioning; or puncture and dispose of in a sanitary landfill.								
RCRA CLASSIFICATION	NO								
RECYCLE CONTAINER		YES	X		CODE	2 - HDPE		NO	

SECTION 14 -- TRANSPORT INFORMATION

DOT CLASSIFICATION		HAZARDOUS			NOT HAZARDOUS	X
DESCRIPTION	Not applicable					

SECTION 15 -- REGULATORY INFORMATION

USA REGULATORY STATUS

	EPA REGISTERED (UNDER FIFRA)	
	FDA REGULATED	
	KOSHER	
	SARA TITLE III MATERIAL	
	USDA AUTHORIZED	

SECTION 16 -- OTHER INFORMATION

NFPA CLASSIFICATION

1	BLUE	HEALTH HAZARD
1	RED	FLAMMABILITY
0	YELLOW	REACTIVITY
--	WHITE	SPECIAL HAZARD

Information contained in this MSDS refers only to the specific material designated and does not relate to any process or use involving other materials. This information is based on data believed to be reliable, and the Product is intended to be used in a manner that is customary and reasonably foreseeable. Since actual use and handling are beyond our control, no warranty, express or implied, is made and no liability is assumed by Hypertherm in connection with the use of this information.

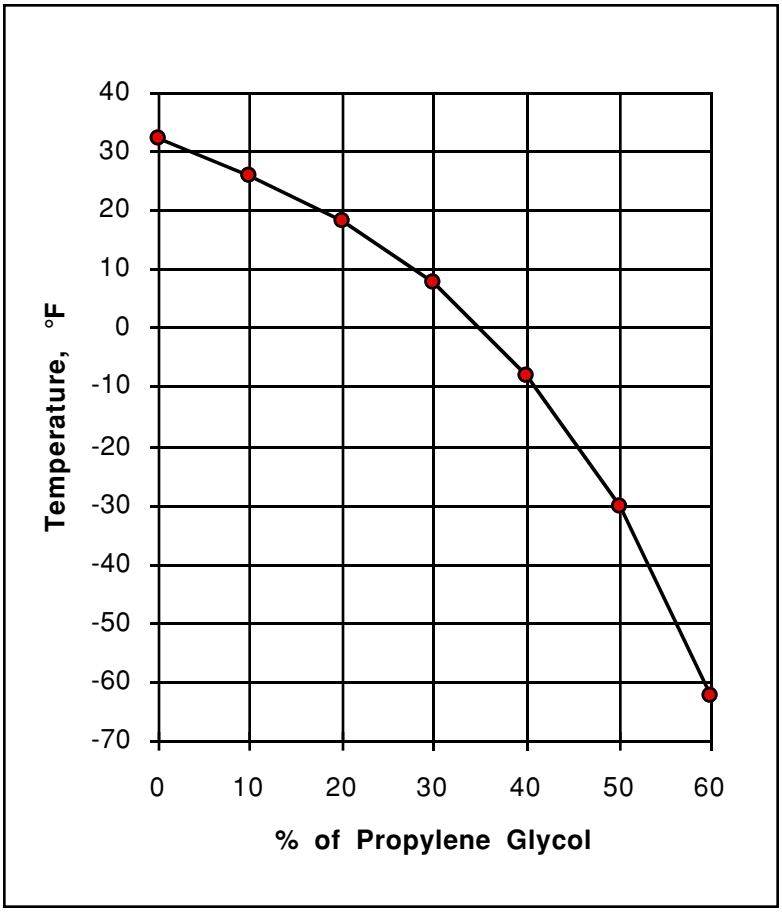

Figure e-1 Freezing Point of Propylene Glycol Solution

SECTION I

MANUFACTURER:	PMC SPECIALTIES GROUP, INC.
ADDRESS:	501 Murray Road Cincinnati, OH 45217
EMERGENCY TELEPHONE:	(513) 242-3300
FOR TRANSPORTATION EMERGENCY:	(800) 424-9300
CHEMICAL NAME AND SYNONYMS:	1-H Benzotriazole, Benzotriazole
TRADE NAMES AND SYNONYMS:	COBRATEC® 99 Powder
CHEMICAL FAMILY:	Triazole
FORMULA:	$C_6H_5N_3$
DOT SHIPPING DESCRIPTION:	Not Regulated (Benzotriazole)
PRODUCT NUMBER:	X18BT5585

NFPA BASED RATINGS: Health: 1, Flammability: 1, Reactivity: 0
HMIS RATINGS: Health: 2, Flammability: 0, Reactivity: 0, PPE: E
WHMIS CLASSIFICATION: D-2-(B)

SECTION II INGREDIENTS

Material	CAS No.	Wt. %	Exposure Limits
Benzotriazole	95-14-7	>99	None Established

SECTION III PHYSICAL DATA

BOILING POINT:	>350° C
FREEZING POINT:	94-99° C
SPECIFIC GRAVITY:	1.36 (solid)
VAPOR PRESSURE AT 20° C:	0.04 mm Hg
VAPOR DENSITY (air=1):	4.1 (calculated)
SOLUBILITY IN WATER % BY WT at 20° C:	2.0
% VOLATILES BY VOLUME:	None
EVAPORATION RATE (Butyl Acetate = 1):	Non-volatile
APPEARANCE AND ODOR:	Off white powder. Slight characteristic odor.

08/28/95

SECTION IV FIRE AND EXPLOSION HAZARD DATA

FLASH POINT:	340° F. (CC)
AUTOIGNITION TEMPERATURE:	Not Available
FLAMMABLE LIMITS IN AIR:	LOWER: Dust MEC. 0.03 oz/(cu. ft.) UPPER: Not Available

EXTINGUISHING MEDIA: Carbon Dioxide, Dry Chemical, Foam

SPECIAL FIRE FIGHTING PROCEDURES: Full protective equipment including self-contained breathing apparatus should be used. Water spray may be ineffective. If water is used, fog nozzles are preferable. Water may be used to cool closed containers to prevent pressure build-up and possible autoignition or explosion when exposed to extreme heat. During emergency conditions, overexposure to decomposition products may cause a health hazard. Symptoms may not be immediately apparent. Get medical attention.

UNUSUAL FIRE AND EXPLOSION HAZARDS: Airborne dust is rated a severe explosion hazard at a minimum concentration of 0.03 ounce per cubic feet (30 grams per cubic meter).

SECTION V HEALTH HAZARD DATA

OSHA AIR CONTAMINANTS: Due to its dusting nature during handling, exposure to dust must comply with OSHA's particulate not otherwise regulated limits for total and respirable dust.

EFFECTS OF OVEREXPOSURE: Contact with the eyes is likely to cause severe irritation. Detailed information about the effects of overexposure in the human being is unavailable. Experience thus far has not provided any example of obvious overexposure with resultant symptoms. Animal studies have indicated an effect on the central nervous system. An NCI bioassay showed no convincing evidence of carcinogenicity (NCI-CG-TR-88). Bacterial mutagenicity data exists. Experts consider the data inconclusive. (Environmental Mutagenesis, Vol. 7, Suppl. 5: 1-248 (1985) and references in RTECS #DM1225000).

EMERGENCY AND FIRST AID PROCEDURES: IF INHALED: If affected, remove from exposure. Restore breathing. Keep warm and quiet. IF ON SKIN: Wash affected area thoroughly with soap and water. IF IN EYES: Flush eyes with large amounts of water for 15 minutes. Get medical attention. IF SWALLOWED: Never give anything by mouth to an unconscious person. Give several glasses of water. If vomiting is not spontaneous, induce vomiting. Keep airway clear. Get medical attention.

TOXICITY DATA:

Oral LD_{50} (rat)	560 mg/Kg
Primary skin Irritation (rabbit)	Not a primary skin irritant
Dermal LD_{50}	>2000 mg/Kg
Eye irritation (rabbit)	caused severe eye irritation
Bluegill Sunfish (96 hr. Tlm)	28 mg/l
Minnow (96 hr. Tlm)	28 mg/l
Trout (96 hr. LC_{50})	39 mg/l
Algae (96 hr. EC_{50})	15.4 mg/l
Daphnia magna (48 hr. LC_{50})	141.6 mg/l

SECTION VI REACTIVITY DATA

STABILITY: Stable
INCOMPATIBILITY: Oxidizing Agents
HAZARDOUS DECOMPOSITION PRODUCTS: BY FIRE: Carbon Dioxide, Carbon Monoxide Nitrogen oxides, HCN in reducing atmospheres
HAZARDOUS POLYMERIZATION: Will Not occur

SECTION VII SPILL OR LEAK PROCEDURES

STEPS TO BE TAKEN IN CASE THE MATERIAL IS SPILLED OR RELEASED: If local high concentration of airborne dust occurs, dampen spill with water and ventilate to disperse dust laden air. Sweep up spill and reclaim or place in a covered waste disposal container.
WASTE DISPOSAL METHOD: Sanitary landfill or incinerate in approved facilities in accordance with local, state, and federal regulations. Do not heat or incinerate in closed containers.

SECTION VIII SPECIAL PROTECTIVE INFORMATION

RESPIRATORY PROTECTION: If personal exposure cannot be controlled below applicable exposure limits by ventilation, wear respiratory devices approved by NIOSH/MSHA for protection against organic vapors, dusts, and mists.

VENTILATION: Local exhaust recommended for dust control.
PROTECTIVE GLOVES: Recommended to avoid skin contact, Rubber, Vinyl
EYE PROTECTION: Use safety goggles where airborne dust is a problem.
OTHER PROTECTIVE EQUIPMENT: Safety shower, eye wash

SECTION IX SPECIAL PRECAUTIONS

PRECAUTIONS TO BE TAKEN IN HANDLING AND STORAGE: Store in a cool, dry area. Keep containers tightly closed when not in use. Avoid creating airborne dust concentrations which could constitute a potential dust explosion hazard. Avoid contact with skin, eyes, and clothing. Avoid inhalation of dust and vapor. DO NOT TAKE INTERNALLY. Clean up spills immediately.

SECTION X REGULATORY STATUS

Benzotriazole (CAS No. 95-14-7) is contained on the following chemical lists:

1. TSCA Section 8(a)/40CFR 712 Preliminary Assessment Information Rule
2. TSCA Section 8(d) Health and Safety Data Rule
3. NTP Testing Program
4. Massachusetts Substance List
5. Canadian Domestic Substance List
6. WHMIS Ingredient Disclosure List
7. TSCA Inventory List

PREPARED: August 28, 1995
SUPERSEDES: May 25, 1994

The information contained herein is based on the data available to us and is believed to be correct as of the date prepared; however, PMC SPECIALTIES GROUP, INC. makes no warranty, expressed or implied regarding the accuracy of these data or the results to be obtained from the use thereof.

Appendix F

SYSTEM GROUNDING

System Grounding Requirements

The plasma system must be grounded for safety reasons and to suppress EMI:

- *Safety* The entire system – power supply, accessory enclosures, and worktable – must be grounded to protect it and the operator from a ground fault. The protective earth (PE) ground connections must be installed by a licensed electrician and conform to national and local codes.

- *EMI Suppression* If allowed by national and local codes, the ground system can also be used to suppress EMI (electromagnetic interference). Below is a guide to configure the plasma system for minimal EMI. See Electromagnetic Compatibility in this manual for additional information.

Suggested Ground Cable Routing

Power Supply

Connect the power supply to the PE ground terminal, using a properly sized color-coded conductor. This PE ground is connected to the service ground through the line disconnect switch. See the Installation section for further information on the power cord and the line disconnect switch.

Equipment Grounding

All accessory modules that receive power from the plasma power supply must also use the power supply's ground – either by connection to the PE terminal of the power supply, or by direct connection to the equipment ground conductor. Each module should have only one connection to ground to avoid ground loops. If any enclosure is grounded to the work table, the work table must be grounded to the power supply.

Effective grounding for EMI reduction is highly dependent upon the installation configuration. Two acceptable configurations are shown in Figures f-1 and f-2.

The RHF console should be installed near the work table, and grounded directly to it. Other modules should be installed near the power supply, and grounded directly to it (Figure f-1).

All modules may also be installed near the work table, and grounded directly to it (Figure f-2). Do not ground the RHF console directly to the power supply.

The customer must furnish all conductors for equipment grounding. Grounding conductors may be purchased through Hypertherm in any length specified by the customer (Part No. 047058). The conductor may also be

purchased locally, using a minimum 8 AWG UL Type MTW cable (USA specification) or the appropriate cable specified by national and local codes.

Consult the appropriate manufacturer's instructions to ground equipment that does not receive power from the power supply.

Work Table Grounding

If a supplementary ground rod is installed near the worktable to reduce EMI, it must be connected directly to the PE ground of the building structure, connected to the service ground; or to earth, providing the resistance between the ground rod and the service ground meets national or local codes. Place the supplementary ground rod within 20 ft (6 m) of the worktable according to national or local codes.

If any module is grounded to the work table, the work table must be grounded to the power supply, or the configuration must be changed to comply with applicable national and local electrical codes.

A ferrite choke can be placed in the conductor between the work table ground rod and the PE ground, with a number of turns through the choke to isolate the safety ground (at 60 Hz) from any electromagnetic interference (frequencies above 150 Khz). The more turns the better. A suitable ferrite choke can be made by wrapping 10 turns or more of the ground lead through Magnetics part number 77109-A7, Fair-Rite part number 59-77011101, or other equivalent ferrite choke. Locate the choke as close as possible to the plasma power supply.

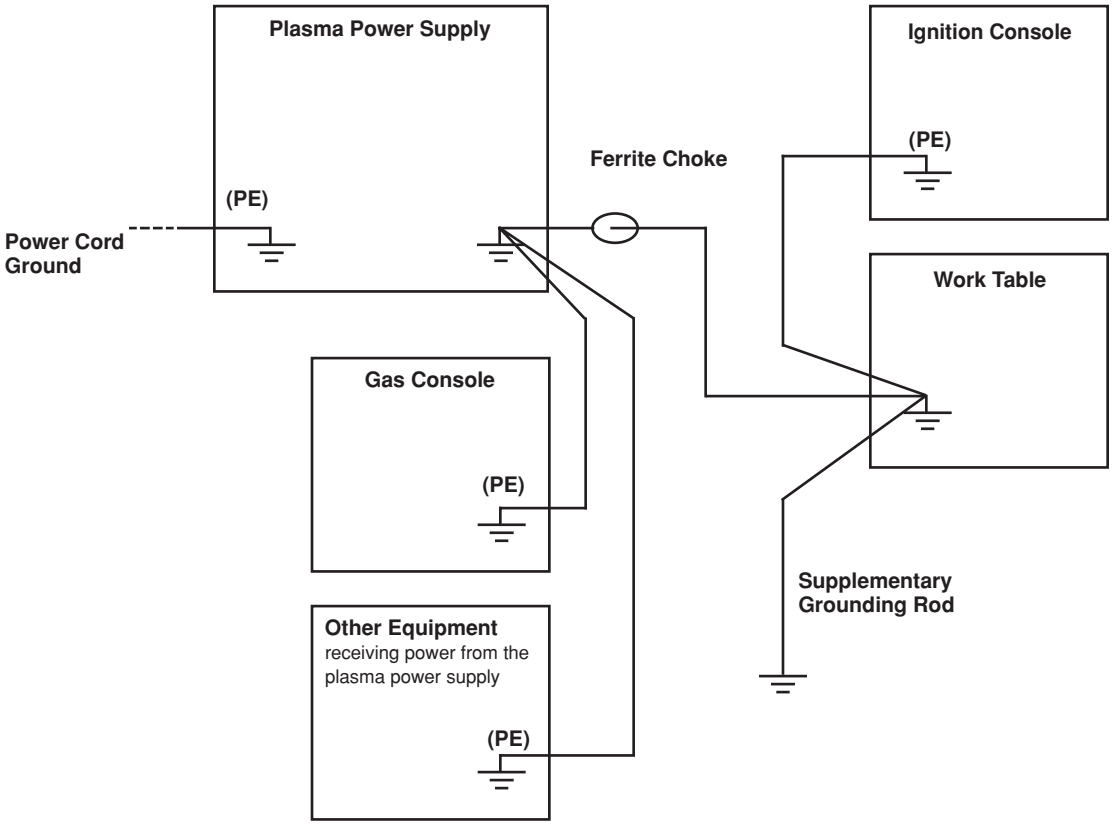

Figure f-1 Recommended Ground Connection Configuration

Note: Configuration may vary for each installation and may require a different ground scheme.

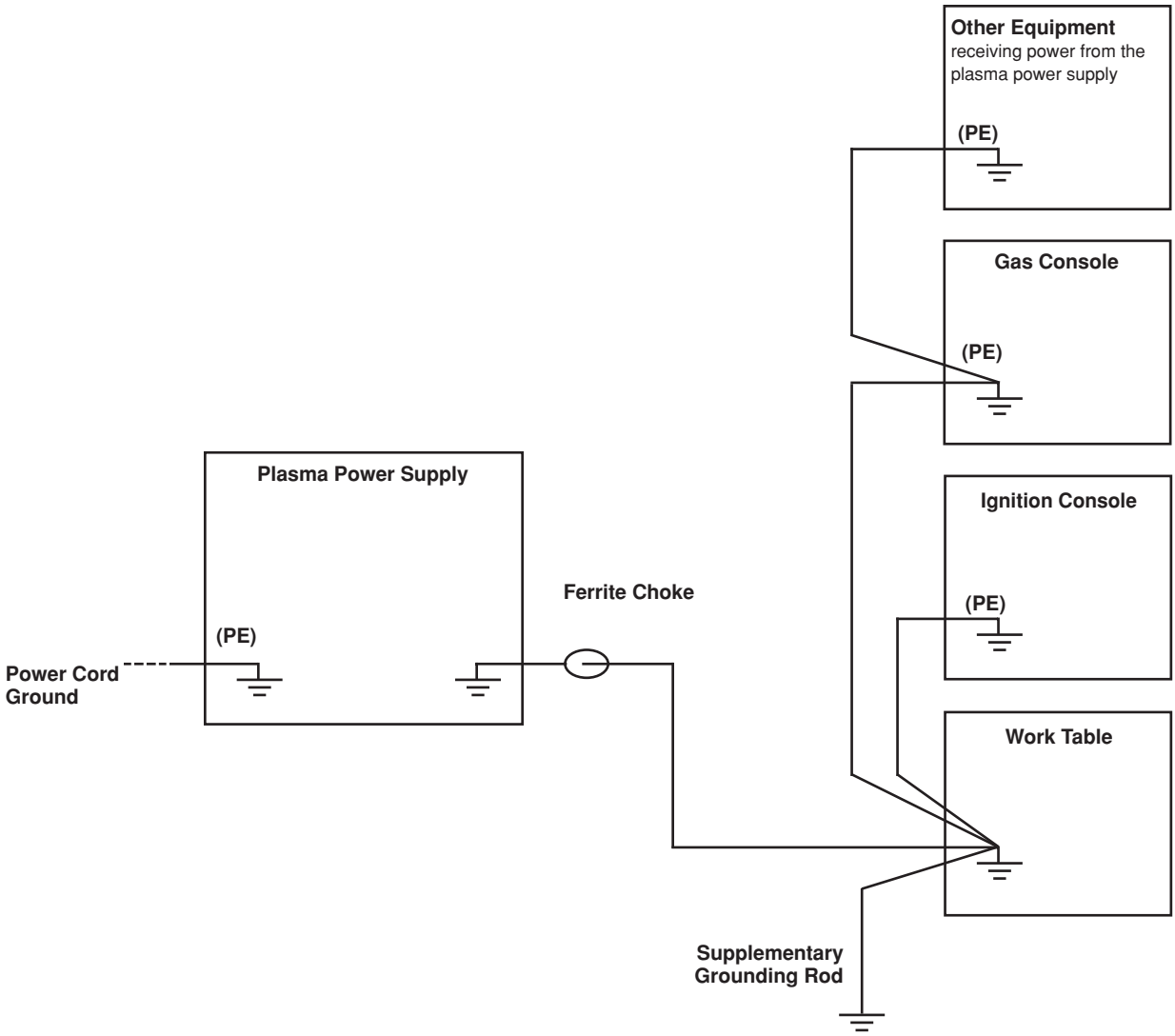

Figure f-2 Alternate Ground Connection Configuration

The preferred cable routing for this configuration is as shown, but it is acceptable to “daisy-chain” the grounds for the gas console and other equipment to the ignition console. The ignition console should NOT be daisy-chained through the other components to the work table.