HySpeed® HT2000®

200 Volt Plasma Arc Cutting System

Instruction Manual
802460 – Revision 14

Hypertherm®

The world leader in plasma cutting technology™

Changed Page	Description	IM246 Rev 12 to 13 8/31/03
9.4 & 9.5	Item # 5 changed from 041590 to 041762. Item # 6 081039 (firmware) was removed. Item numbers following Item #5 changed to agree.	
Section 10	Wiring diagrams Revision change from RZ to SC	

Begin w/serial # 2000-006387

Changed Page	Description	IM246 Rev 11 to 12 4/10/00
0.02	Replaced text from "to Hypertherm's place of business..." to "to an authorized Hypertherm repair facility..."	
4.14	Added remote power on/off signals to machine interface cable	
6.13	Added p/ns for retaining cap with IHS tab	
8.20	New graphic of chopper	
9.08	Added graphic of relays to Fig. 9-4	
9.09	Added part numbers for relays	
9.21	Changed p/n of PS3 from 005130 to 005227	
9.51	Changed p/n of PS3 from 005130 to 005227	
10.05-10.13	Uprevved wiring diagrams to RZ	

Begin w/serial # 2000-005756

Changed Page	Description	IM246 Rev 10 to 11 9/27/99
0.01	Uprevved because of ECNs 10483, 10484, 10639, 10145, 10670	
0.02	Added plumbing and electrical codes statement to warranty	
0.04	Updated TOC for added section on cutting techniques, beveling consumable parts kit	
0.05	Updated TOC for added section on cutting techniques, beveling consumable parts kit	
0.08	Updated TOC for added section on cutting techniques, beveling consumable parts kit	
1.0-1a.06	New safety sections	
3.02	Bolded installation by qualified...; rewrote hard plumbing suggestions	
3.03	Bumped page	
3.04	Bumped page	
6.01	Updated TOC for added section on cutting techniques	
6.12	Referenced new section on cutting technique	
6.39-6.42	New section on cutting techniques	
8.25	Changed graphic of coolant reservoir	
8.26	New graphic of coolant reservoir	
9.01	Updated TOC for beveling consumable parts kit	
9.17	Corrected part no. of adapter from 015157 to 015015	
9.18	New coolant reservoir	
9.19	New coolant reservoir #, new level switch SA #	
9.25	New part number for pressure switches	
9.36	New figure of torches	
9.37	New torch mounting sleeve #	
9.48	Renamed 1st header from consumable parts kit to HT2000 Consumable Parts Kit	
9.49	Added HT2000 Beveling Consumable Parts Kit	
9.51	Updated power supply recommended spare parts to include new level switch #	
9.52	Updated gas console recommended spare parts to include new pressure switches	
10.05-10.13	Uprevved wiring diagrams to RX	

Begin w/serial # 2000-005600

Changed Page	Description
0.01	Uprevved because of ECNs 10078, 10079, 10070, 9753, 10012, 9864, 9742, 10020, 9926
0.05-0.08	Changed TOC for new figure descriptions, headings for parts list
2.04	Added The water muffler cannot be used with the stainless steel torch
2.06	Added new part numbers for torches, call out 2 dimensions for diameter
2.10	Added The water muffler cannot be used with the stainless steel torch
4.18	Added The water muffler cannot be used with the stainless steel torch
4.34	Removed part numbers for torch mounting brackets
6.13	Changed electrode p/ns and swirl ring p/ns in cut chart index
6.14	Changed electrode p/n, clarified production cutting capacity
6.15	Changed electrode p/n and swirl ring p/ns clarified production cutting capacity
6.16	Clarified production cutting capacity
6.17	Clarified production cutting capacity
6.18	Changed electrode p/n and swirl ring p/ns clarified production cutting capacity
6.20	Changed electrode p/n, clarified production cutting capacity
6.21	Clarified production cutting capacity
6.22	Clarified production cutting capacity
6.23	Clarified production cutting capacity
6.24	Changed electrode p/n, clarified production cutting capacity
6.25	Clarified production cutting capacity
6.26	Changed electrode p/n
6.27	Changed electrode p/n, clarified production cutting capacity
6.28	Clarified production cutting capacity
6.29	Clarified production cutting capacity
6.30	Clarified production cutting capacity
6.31	Changed electrode p/n, clarified production cutting capacity
6.32	Clarified production cutting capacity
6.33	Changed swirl ring p/ns, clarified production cutting capacity
6.34	Changed electrode p/n, clarified production cutting capacity
6.35	Changed electrode p/n
9.18	Removed pump clamp from figure
9.19	Removed pump clamp from parts list, changed p/n for motor and pump (now they are kits)
9.21	Changed p/n of SV7
9.25	Changed p/ns of SV1, SV2, SV3
9.27	Changed p/ns of SV4
9.36	Changed figure to cover both 2"diameter torches
9.37	New standard torch p/n, new stainless steel torch, added 2" torch mounting bracket
9.37A	Old standard torch now 1-3/4" optional
9.37B	New p/n for optional torch
9.43	Added p/ns for 2" diameter IHS system
9.49	Changed p/ns for O2 electrode and swirl ring in parts kit
9.51	Changed p/n of SV7
9.52	Changed p/ns of SV1, SV2, SV3, SV4
i1-i6	Updated index
10.01	Uprevved wiring diagrams to RV

Begin w/serial # 2000-005198

IM246 Rev 8 to 9 8/21/98

Changed Page	Description
0.01	Uprevved because of ECNs 9763, 9758, 9803
8.25	New graphic of coolant flow
8.26	Updated graphic of coolant tank
9/18	New graphic of rear wall outside
9.19	New part numbers for solenoid valve assembly, water pump assembly
10.01	Added coolant flow diagram to wiring diagrams TOC
10.19	Added coolant flow diagram to wiring diagrams

Begin w/serial # 2000-005025

IM246 Rev 7 to 8 7/24/98

Changed Page	Description
0.01	Uprevved because of ECNs 9523, 9483, grounding appendix, serial # jump to 2000-005000
0.05	Added System Grounding to TOC
0.06	Added System Grounding to TOC
0.07	Bumped page
0.08	Added System Grounding to TOC
3.04	Referenced new grounding appendix
4.03	Referenced new grounding appendix
4.04	Referenced new grounding appendix
7.06	Added more verbiage on H35 cutting
7.07	Bumped page
7.08	Added more verbiage on H35 cutting
8.09	New power distribution PCB graphic, added fuse
8.22	Added error code for phase loss
9.05	New microprocessor board #, new firmware #
9.12	Referenced dwg of chopper with phase loss board
9.13	New graphic of chopper with phase loss board, new phase loss board #
9.51	New microprocessor board #, new firmware #
10.01	Uprevved wiring diagrams to RT
g.01	New system grounding appendix
g.02	New system grounding appendix
g.03	New system grounding appendix
g.04	New system grounding appendix
g.05	New system grounding appendix
i.04	Added phase loss to index
i.05	Added g1-g4 to grounding requirements in index

Begin w/serial # 2000-005000

IM246 Rev 6 to 7 5/4/98

Changed Page	Description
0.01	Uprevved because of new 100A electrode and change to cut charts
6.13	Changed index to call out 120547 electrode
6.17	Changed electrode part number to 120547
6.18	Changed electrode part number to 120547; changed flow %
9.49	Updated consumable parts kit contents

Begin w/serial # 2000-004270

0.01	Uprevved because of IOP, ECNs 8912, 8910, 9035, 8746
0.04	Updated TOC
0.06	Updated TOC
4.04	Added torque spec.
4.16	Removed current 400 signal from cable description
6.01	Changed TOC
6.03	Added note to hold down on button for up to 1 minute
6.10	Added note to hold down on button until leds extinguish
6.12	Added note to begin and end cut on plate
6.13	Renumbered pages on cut chart index
6.14-6.15	Added initial torch piercing height to cut charts; combined under+above water on 1 page
6.16	Added initial torch piercing height to cut charts
6.17-6.18	Added initial torch piercing height to cut charts; combined under+above water on 1 page
6.19	Added initial torch piercing height to cut charts
6.20-6.22	Added initial torch piercing height to cut charts; combined under+above water on 1 page
6.23	Added initial torch piercing height to cut charts
6.24	Added initial torch piercing height to cut charts; combined under+above water on 1 page
6.25-6.26	Added initial torch piercing height to cut charts
6.27-6.29	Added initial torch piercing height to cut charts; combined under+above water on 1 page
6.30	Added initial torch piercing height to cut charts
6.31	Added initial torch piercing height to cut charts; combined under+above water on 1 page
6.32-6.34	Added initial torch piercing height to cut charts
6.35	Put all gouging cut charts on 1 page
6.36	Bumped page
6.37	Bumped page; better graphic of main body; removed reference to nozzle o-ring
6.38	Bumped page
8.03	(from)...status LED turn off... (to)...status LED illuminate
8.10	Edited for easier translation
8.11	Edited for easier translation
8.12	Edited for easier translation
8.13	Edited for easier translation
8.14	Edited for easier translation
8.16	Edited for easier translation
8.17	Edited for easier translation
8.18	Edited for easier translation
9.04	New graphic of front panel
9.05	New part numbers for fans - added fan guard; new graphic of THC
9.11	Fuseholder p/n change
9.15	4 ohm resistor p/n change, designation change
9.51	Designation updates in recommended spare parts; added flowswitch
9.52	Added 100 psi pressure gauge to gas console recommended spare parts
10.01	Uprevved wiring diagrams to
10.02	(from) 2 of 9 in the...(to)...2 in the...
e.04	Added spacer to graphic of power supply
e.06	Added spacer and part number to power supply
i.01 to i.06	Updated index

Begin w/serial # 2000-004270

IM246 Rev 4 to 5 7/11/97

Changed Page	Description
0.01	Uprevved to 5 because of new valve in RHF console
4.07	New graphic of RHF console
6.13	Eliminated 40A cutting chart for mild steel
6.16	Eliminated 40A cutting chart for mild steel
6.17	Added to note on 020679 swirl ring use
7.05	Rewording minutia
8.04	Added power supply cleaning routine maintenance
8.05	Bumped page
9.09	Changed 003138 from 100A to 20A
9.20	New graphic of RHF console
9.21	New part number for SV7
10.01	Uprevved wiring diagrams to MM

Begin w/serial # 2000-003196

IM246 Rev 3 to 4 4/14/97

Changed Page	Description
0.01	Uprevved to 4 for additional cables, hoses, new wiring dia., note to 50A cutting
0.06	Added figures to TOC
0.07	Added figures to TOC
2.05	Added tolerances to gas pressures
2.07	Corrected one dimension for gas console
3.02	Reference to Section 2 for gas specs, added caution
3.03	Reference to Section 2 for gas specs
3.10	Changed view of power cable connections to match label
4.06	Referenced to section 9 for additional lengths of hoses and cables
5.03	Added tolerances to gas pressures
6.10	Added tolerances to gas pressures
6.17	Added note to cut chart for using 020679 swirl ring
6.19A	Added note to 50A cut chart about possible cut degradation from N2 in the lines
6.39	Added note to cut chart for using 020679 swirl ring
7.07	Added tolerances to gas pressures
8.03	Referenced torch coolant draining procedure
8.26	Added torch coolant draining procedure
9.38	Additional lengths
9.39	Additional lengths
9.40	Additional lengths
9.41	Additional lengths
9.42	Additional lengths
9.43	Additional lengths
9.44	Additional lengths
9.45	Additional lengths
9.46	Additional lengths
9.47	Additional lengths
10.01	Uprevved wiring diagrams to KK

Begin w/serial # 2000-003090

Changed Page	Description
0.01	Uprevved to 3, added email and web address
0.05	Changed Appendices page #s
2.05	Added 440/460 power supply part #
2.06	Changed part # of machine torch
2.07	Changed part #s of Gas Console and Motor Valve Console
3.05	Added current draw and fuse size for 440V power supply
3.06	Added cable size for 440V power supply
4.06	Added note to installation section about additional part numbers
4.08	Removed reference to unused wires in RHF cable
4.10	Added signals for SV1A and SV1B
4.11	Graphic of new gas console
4.12	Added signals for SV4A and SV4B
4.15	Removed reference to V1 and V2
4.20	Changed page reference from 9-45 to 9-43; corrected length of 024144
4.25	Graphic of new gas console
4.27	Graphic of new gas console
4.31	New figure of new torch
5.04	Graphic of new gas console
6.05	Graphic of new gas console
6.19A	Added note about arc voltage, added scfh flows
7.05	New graphics of torch, new layout, clarification in procedure
7.06	Clarification of procedure
8.11	Removed outdated reference to leaking oil in transformer
9.05	Uprevved firmware to J
9.07	Added 440V power transformer part #
9.09	Added 440V control transformer part #
9.18	Added graphic of pump coupler
9.19	Added part # of pump coupler
9.24	Graphic of new gas console
9.25	New parts list for new gas console
9.26	Graphic of new motor valve console
9.27	New parts list for new motor valve console
9.33	Removed part # for swivel fitting
9.36	New figure of new torch
9.37	New parts list for machine torch
9.38	Clarified hoses in torch leads removed redundant graphic of cable and hose assy
9.52	Changed part # for new Kip valves in gas console and motor valve console
10.01	Uprevved wiring diagrams to JJ
0.c1	Put aeration manifold on 1 pg in appendix
0.d1	Removed advertising for Hankison filters, added description of filtering needs in appendix d
0.f1	Made Standards Index appendix f, removed glossary

Begin w/serial # 2000-003000

Changed Page	Description
0.01	Uprevved manual due to LVD compliance
0.03-0.08	Updated table of contents
1.01-1.04	New Safety section
1a.01-1a.04	New French Safety section
2.02	Changed reference from 380-415V CE to 400V CE
2.05	Changed reference from 380-415V CE to 400V CE
3.04	Changed warning on propylene glycol to not induce vomiting
3.05	Added specs for 400V
3.06	Added specs for 400V
3.08	Changed figures of transformers to show new configurations
3.09	Changed figures of transformers to show new configurations
3.10	Changed reference from 380-415V CE to 400V CE
5.03	Added "See Status Indicators Before Startup to step 6
6.01	Added STATUS Indicators Before Startup to Sect. 6 TOC
6.02	New STATUS logic
6.03	Added STATUS Indicators Before Startup
6.10	Added "See Status Indicators Before Startup to step 6
7.07	Added "See Status Indicators Before Startup to step 7
8.03	Added 6-month maintenance to power supply
8.04	New figure for cleaning pump strainer
8.05	Bumped page
8.06	New startup logic
8.09	Picture of new power distribution board
8.11	Changed logic of cause 3.3
8.15	New STATUS logic
8.16	New STATUS logic
8.17	New STATUS logic
8.18	New STATUS logic
8.20	Removed reference to old chopper temperature switch
8.21	New graphic of control board
8.22	Changed figure label to Rev. G error codes (no change in actual codes)
8.23	New STATUS logic
8.24	New STATUS logic
9.05	Changed firmware rev level to G
9.06	Changed part no. for PCB5, corrected description of items 3 and 9
9.07	Changed reference from 220-380-415V to 220-380-400-415V
9.09	New part no. for PCB1; changed reference to 220-380-400-415V on T1
9.13	New chopper part no. and temp switch
9.19	New coolant reservoir part no.; added part nos. for gauge, drain valve
9.29	Changed part no. of potentiometer
9.51	Changed part nos. of PCB1, CH1
10.01	Uprevved wiring diagrams to GG

Begin w/serial # 2000-002500

HySpeed HT2000

Instruction Manual

(P/N 802460)

Revision 14 – November, 2013

Hypertherm, Inc.
Hanover, NH USA

www.hypertherm.com

© Copyright 2013 Hypertherm, Inc.
All Rights Reserved

Hypertherm, HT, HyLife, HySpeed and LongLife are trademarks of Hypertherm, Inc.
and may be registered in the United States and/or other countries

Hypertherm, Inc.
Etna Road, P.O. Box 5010
Hanover, NH 03755 USA
603-643-3441 Tel (Main Office)
603-643-5352 Fax (All Departments)
info@hypertherm.com (Main Office Email)
800-643-9878 Tel (Technical Service)
service@hypertherm.com (Technical Service Email)
800-737-2978 Tel (Customer Service)
customer.service@hypertherm.com (Customer Service Email)

Hypertherm Automation, LLC
5 Technology Drive, Suite 300
West Lebanon, NH 03755 USA
603-298-7970 Tel
603-298-7977 Fax

Hypertherm Plasmatechnik, GmbH
Technologiepark Hanau
Rodenbacher Chaussee 6
63457 Hanau-Wolfgang, Deutschland
49 6181 58 2100 Tel
49 6181 58 2134 Fax
49 6181 58 2123 (Technical Service)

Hypertherm (S) Pte Ltd.
No. 19 Kaki Bukit Road 2
K.B. Warehouse Complex
Singapore 417847, Republic of Singapore
65 6 841 2489 Tel
65 6 841 2490 Fax
65 6 841 2489 (Technical Service)

Hypertherm UK, Ltd.
9 Berkeley Court, Manor Park
Runcorn, Cheshire, England WA7 1TQ
44 1928 579 074 Tel
44 1928 579 604 Fax

France
15 Impasse des Rosiers
95610 Eragny, France
00 800 3324 9737 Tel
00 800 4973 7329 Fax

Hypertherm S.r.l.
Via Torino 2
20123 Milano, Italia
39 02 725 46 312 Tel
39 02 725 46 400 Fax
39 02 725 46 314 (Technical Service)

Hypertherm Europe B.V.
Vaartveld 9
4704 SE Roosendaal, Nederland
31 165 596907 Tel
31 165 596901 Fax
31 165 596908 Tel (Marketing)
31 165 596900 Tel (ETSO – Technical Service)
00 800 49 73 7843 Tel (ETSO – Technical Service toll-free in Europe)

Japan
1952-14 Yata-Natsumegi
Mishima City, Shizuoka Pref.
411-0801 Japan
81 0 559 75 7387 Tel
81 0 559 75 7376 Fax

Hypertherm Brasil Ltda.
Rua Visconde de Santa Isabel, 20 – Sala 611
Vila Isabel, RJ
Brasil CEP 20560-120
55 21 2278 6162 Tel
55 21 2578 0947 Fax

EMC INTRODUCTION

Hypertherm's CE-marked equipment is built in compliance with standard EN50199. The equipment should be installed and used in accordance with the information below to achieve electromagnetic compatibility.

The limits required by EN50199 may not be adequate to completely eliminate interference when the af fected equipment is in close proximity or has a high degree of sensitivity. In such cases it may be necessary to use other measures to further reduce interference.

This plasma equipment is designed for use only in an industrial environment.

INSTALLATION AND USE

The user is responsible for installing and using the plasma equipment according to the manufacturer's instructions. If electromagnetic disturbances are detected then it shall be the responsibility of the user to resolve the situation with the technical assistance of the manufacturer . In some cases this remedial action may be as simple as earthing the cutting circuit, see *Earthing of Workpiece*. In other cases it could involve constructing an electromagnetic screen enclosing the power source and the work complete with associated input filters. In all cases electromagnetic disturbances must be reduced to the point where they are no longer troublesome.

ASSESSMENT OF AREA

Before installing the equipment the user shall make an assessment of potential electromagnetic problems in the surrounding area. The following shall be taken into account:

a. Other supply cables, control cables, signalling and telephone cables; above, below and adjacent to the cutting equipment.
b. Radio and television transmitters and receivers.
c. Computer and other control equipment.
d. Safety critical equipment, for example guarding of industrial equipment.
e. Health of the people around, for example the use of pacemakers and hearing aids.
f. Equipment used for calibration or measurement.
g. Immunity of other equipment in the environment. User shall ensure that other equipment being used in the environment is compatible. This may require additional protection measures.
h. Time of day that cutting or other activities are to be carried out.

The size of the surrounding area to be considered will depend on the structure of the building and other activities that are taking place. The surrounding area may extend beyond the boundaries of the premises.

METHODS OF REDUCING EMISSIONS

Mains Supply

Cutting equipment must be connected to the mains supply according to the manufacturer's recommendations. If interference occurs, it may be necessary to take additional precautions such as filtering of the mains supply. Consideration should be given to shielding the supply cable of permanently installed cutting equipment, in metallic conduit or equivalent. Shielding should be electrically continuous throughout its length. The shielding should be connected to the cutting mains supply so that good electrical contact is maintained between the conduit and the cutting power source enclosure

Maintenance of Cutting Equipment

The cutting equipment must be routinely maintained according to the manufacturer's recommendations. All access and service doors and covers should be closed and properly fastened when the cutting equipment is in operation. The cutting equipment should not be modified in any way except for those changes and adjustments covered in the manufacturer's instructions. In particular, the spark gaps of arc striking and stabilizing devices should be adjusted and maintained according to the manufacturer's recommendations.

Cutting Cables

The cutting cables should be kept as short as possible and should be positioned close together, running at or close to the floor level.

Equipotential Bonding

Bonding of all metallic components in the cutting installation and adjacent to it should be considered. However , metallic components bonded to the workpiece will increase the risk that the operator could receive a shock by touching these metallic components and the electrode at the same time. The operator should be insulated from all such bonded metallic components.

Earthing of Workpiece

Where the workpiece is not bonded to earth for electrical safety , nor connected to earth because of its size and position, for example, ship's hull or building steelwork, a connection bonding the workpiece to earth may reduce emissions in some, but not all instances. Care should be taken to prevent the earthing of the workpiece increasing the risk of injury to users, or damage to other electrical equipment. Where necessary , the connection of the workpiece to earth should be made by a direct connection to the workpiece, but in some countries where direct connection is not permitted, the bonding should be achieved by suitable capacitances selected according to national regulations.

Note. The cutting circuit may or may not be earthed for safety reasons. Changing the earthing arrangements should only be authorized by a person who is competent to assess whether the changes will increase the risk of injury , for example, by allowing parallel cutting current return paths which may damage the earth circuits of other equipment. Further guidance is given in IEC TC26 (sec)94 and IEC TC26/108A/CD Arc Welding Equipment Installation and Use.

Screening and Shielding

Selective screening and shielding of other cables and equipment in the surrounding area may alleviate problems of interference. Screening of the entire plasma cutting installation may be considered for special applications

WARNING

Genuine Hypertherm parts are the factory-recommended replacement parts for your Hypertherm system. Any damage caused by the use of other than genuine Hypertherm parts may not be covered by the Hypertherm warranty.

WARNING

You are responsible for the safe use of the Product. Hypertherm does not and cannot make any guarantee or warranty regarding the safe use of the Product in your environment.

GENERAL

Hypertherm, Inc. warrants that its Products shall be free from defects in materials and workmanship, if Hypertherm is notified of a defect (i) with respect to the power supply within a period of two (2) years from the date of its delivery to you, with the exception of G3 Series power supplies, which shall be within a period of three (3) years from the date of delivery to you, and (ii) with respect to the torch and leads within a period of one (1) year from its date of delivery to you. This warranty shall not apply to any Product which has been incorrectly installed, modified, or otherwise damaged. Hypertherm, at its sole option, shall repair, replace, or adjust, free of charge, any defective Products covered by this warranty which shall be returned with Hypertherm's prior authorization (which shall not be unreasonably withheld), properly packed, to Hypertherm's place of business in Hanover, New Hampshire, or to an authorized Hypertherm repair facility, all costs, insurance and freight prepaid. Hypertherm shall not be liable for any repairs, replacement, or adjustments of Products covered by this warranty, except those made pursuant to this paragraph or with Hypertherm's prior written consent. **The warranty above is exclusive and is in lieu of all other warranties, express, implied, statutory, or otherwise with respect to the Products or as to the results which may be obtained therefrom, and all implied warranties or conditions of quality or of merchantability or fitness for a particular purpose or against infringement. The foregoing shall constitute the sole and exclusive remedy for any breach by Hypertherm of its warranty**. Distributors/OEMs may offer different or additional warranties, but Distributors/OEMs are not authorized to give any additional warranty protection to you or make any representation to you purporting to be binding upon Hypertherm.

PATENT INDEMNITY

Except only in cases of products not manufactured by Hypertherm or manufactured by a person other than Hypertherm not in strict conformity with Hypertherm's specifications and in cases of designs, processes, formulae, or combinations not developed or purported to be developed by Hypertherm, Hypertherm will defend or settle, at its own expense, any suit or proceeding brought against you alleging that the use of the Hypertherm product, alone and not in combination with any other product not supplied by Hypertherm, infringes any patent of any third party. You shall notify Hypertherm promptly upon learning of any action or threatened action in connection with any such alleged infringement, and Hypertherm's obligation to indemnify shall be conditioned upon Hypertherm's sole control of, and the indemnified party's cooperation and assistance in, the defense of the claim.

LIMITATION OF LIABILITY

In no event shall Hypertherm be liable to any person or entity for any incidental, consequential, indirect, or punitive damages (including but not limited to lost profits) regardless of whether such liability is based on breach of contract, tort, strict liability, breach of warranties, failure of essential purpose or otherwise and even if advised of the possibility of such damages.

LIABILITY CAP

In no event shall Hypertherm's liability, whether such liability is based on breach of contract, tort, strict liability, breach of warranties, failure of essential purpose or otherwise, for any claim action suit or proceeding arising out of or relating to the use of the Products exceed in the aggregate the amount paid for the Products that gave rise to such claim.

INSURANCE

At all times you will have and maintain insurance in such quantities and types, and with coverage sufficient and appropriate to defend and to hold Hypertherm harmless in the event of any cause of action arising from the use of the Products.

NATIONAL AND LOCAL CODES

National and Local codes governing plumbing and electrical installation shall take precedent over any instructions contained in this manual. **In no event** shall Hypertherm be liable for injury to persons or property damage by reason of any code violation or poor work practices.

TRANSFER OF RIGHTS

You may transfer any remaining rights you may have hereunder only in connection with the sale of all or substantially all of your assets or capital stock to a successor in interest who agrees to be bound by all of the terms and conditions of this Warranty.

Electromagnetic Compatibility (EMC) ..... **i**
Warranty ..... **ii**

Section 1 SAFETY **1-1**
Recognize Safety Information 1-2
Follow Safety Instructions 1-2
Cutting Can Cause Fire or Explosion 1-2
Electric Shock Can Kill 1-3
Cutting Can Produce Toxic Fumes 1-3
A Plasma Arc Can Cause Injury and Burns 1-4
Arc Rays Can Burn Eyes and Skin 1-4
Grounding Safety 1-4
Compressed Gas Equipment Safety 1-5
Gas Cylinders Can Explode If Damaged 1-5
Noise Can Damage Hearing 1-5
Pacemaker and Hearing Aid Operation 1-5
A Plasma Arc Can Damage Frozen Pipes 1-5
Additional Safety Information 1-5
Warning Label 1-6

Section 1a SÉCURITÉ **1a-1**
Identifier les consignes de sécurité 1a-2
Suivre les instructions de sécurité 1a-2
Le coupage peut provoquer un incendie ou une explosion 1a-2
Les chocs électriques peuvent être fatals 1a-3
Le coupage peut produire des vapeurs toxiques 1a-3
L'arc plasma peut provoquer des blessures ou des brûlures 1a-4
Mise à la masse et à la terre 1a-4
Les rayons de l'arc peuvent brûler les yeux et la peau 1a-4
Sécurité des bouteilles de gaz comprimé 1a-5
Les bouteilles de gaz comprimé peuvent exploser en cas de dommages 1a-5
Le bruit peut provoquer des problèmes auditifs 1a-5
Pacemakers et prothéses auditives 1a-5
Étiquette de sécurité 1a-6

Section 2 SPECIFICATIONS **2-1**
Introduction 2-2
- Power Supply 2-2
- Remote High Frequency (RHF) Console 2-2
- Gas Console 2-3
- Motor Valve Console 2-3
- Argon-Hydrogen Console 2-3
- Remote Voltage/Current (V/C) Control 2-3
- Initial Height Sensing (IHS) 2-4
- Timer/Counter 2-4
- Water Muffler 2-4

Specifications 2-5
- System Requirements 2-5
- Power Supply 2-5
- HySpeed HT2000 Machine Torches 2-6

Remote High Frequency Console 2-6
Gas Console 2-7
Motor Valve Console 2-7
Argon/Hydrogen Console 2-8
Digital Remote (DR) V/C Control 2-8
Programmable Remote (PR) V/C Control 2-9
Initial Height Sensing 2-10
Timer/Counter 2-10
Water Muffler 2-10

Section 3 PRE-INSTALLATION 3-1
Introduction 3-2
Gas Requirements 3-2
Air as Plasma Gas 3-2
Oxygen, Nitrogen, or Argon/Hydrogen as Plasma Gas 3-3
Shield Gas 3-3
Torch Coolant Requirements 3-4
Grounding Requirements 3-5
Power Requirements 3-5
Line Disconnect Switch 3-5
Power Cable 3-5
Positioning the Power Supply 3-6
Electrical Configurations 3-7
240/480V Linkboard Configurations 3-7
220/380/415V Transformer T1 and T2 Configurations 3-8
Connecting the Power 3-10
Torch Lifter Requirement 3-11
Optional Equipment 3-11
Water Muffler 3-11
Initial Height Sensing (IHS) 3-12

Section 4 INSTALLATION 4-1
Upon Receipt 4-2
Claims 4-2
Module Grounding and Grounding Checks 4-3
Noise Levels 4-3
System Units Placement 4-4
Power Supply Connections 4-6
Initial Height Sensing (IHS) Connections 4-20
Gas Console Connections 4-24
RHF and Motor Valve Consoles to Torch Connections 4-28
Routing the Torch Leads 4-28
Connecting the HF Torch Leads to the RHF Console 4-28
Connecting the HF Torch Leads to the Torch 4-30
Connecting the Off-Valve Cable and Plasma Hose from the Torch to the Motor Valve Console 4-30
Optional Power Supply Connections 4-32

Timer/Counter to Power Supply 4-32
Hold Cable Connections (When using Multi-Torch Systems) 4-32
Argon-Hydrogen Connections 4-34
Mounting the Machine Torch 4-34
Torch Alignment 4-34

Section 5 POST-INSTALLATION 5-1
Introduction 5-2
System Checkout 5-3
Set Switches and Check Torch 5-3
Turn Gases On 5-3
Turn Power Supply On and Adjust Voltage/Current 5-3
Adjust Preflow Gases 5-5
Adjust Cut Flow Gases and Check Initial Height Sensing (IHS) 5-5
Final Torch Adjustment 5-6
Check Torch Height Control (THC) and V/C Module 5-6

Section 6 OPERATION 6-1
Front Panel Controls and Indicators 6-2
Power Supply 6-2
STATUS Indicators Before Startup 6-3
Gas Console 6-4
Digital Remote (DR) V/C Module 6-6
Programmable Remote (PR) V/C Module 6-7
Timer / Counter 6-7
Noise Levels (Decibels) 6-8
Daily Start-Up 6-9
Check Torch 6-9
Turn Gases On 6-9
Turn Power Supply On and Adjust Voltage/Current 6-10
Adjust Preflow Gases 6-10
Adjust Cut Flow Gases and Prepare for Cutting 6-11
Common Cutting Faults 6-11
Technical Questions 6-12
Cut Charts 6-12
Conversions 6-12
Cut Charts and Consumable Parts Index 6-13
Changing Consumable Parts 6-36
Removal and Inspection 6-37
Replacement 6-38
Changing the Water Tube 6-39
How to Optimize Cut Quality 6-40
Tips for Table and Torch 6-40
Plasma Set-up Tips 6-40
Maximize the Life of Consumable Parts 6-40
Additional Factors of Cut Quality 6-41
Additional Improvements 6-42

Section 7 OPERATION: ARGON-HYDROGEN MANIFOLD 7-1
Front Panel Controls and Indicators 7-2
Installation 7-3
Operation 7-6
Check Torch 7-6
Turn Gases On 7-6
Turn Power Supply On and Adjust Voltage/Current 7-7
Adjust H35 Gas Flow 7-7
After Cutting with Argon-Hydrogen 7-8

Section 8 MAINTENANCE 8-1
Introduction 8-2
Routine Maintenance 8-3
Torch and Torch Leads 8-3
Power Supply 8-3
Gas Console 8-4
Motor Valve Console 8-4
RHF Console 8-5
Startup Sequence 8-5
Initial Checks 8-7
Troubleshooting 8-10
STATUS LED Troubleshooting 8-15
Chopper Module Test Procedure 8-19
Error Codes 8-21
Analog Board LED Functions 8-22
Relay Board LED Function List 8-23
Relay Board LED Status Conditions 8-23
Coolant Flow Test Procedure 8-25
Check Reservoir Coolant 8-25
Verify Flow Rate Return from Torch 8-25
Verify Flow Rate to Torch 8-26
Check Pump, Motor and Solenoid Valve 8-27
Torch Coolant Draining 8-28
Preventive Maintenance Schedule 8-29

Section 9 PARTS LIST 9-1
Introduction 9-2
System Parts Diagram 9-2
Power Supply
Front Panel 9-5
THC Assembly 9-5
Control Panel 9-6
Base Plate and Components 9-7
Center Wall Right Side 9-9
Center Wall Left Side 9-11
Front Wall Inside 9-13
Rear Wall Inside 9-15

High Frequency and I/O PCB 9-17
Rear Wall Outside 9-19
Remote High Frequency Console 9-21
Spark Gap Assembly 9-23
Gas Console 9-25
Motor Valve Console 9-27
Remote V/C – Digital Remote (DR) Control Station 9-29
Remote V/C – Programmable (PR) Control Station 9-31
IHS Console 9-33
Argon-Hydrogen Console 9-34
Timer/Counter 9-35
Hyspeed HT2000 Machine Torch 9-37
Hyspeed HT2000 Stainless Steel Machine Torch 9-37
Torch Mounting Bracket 9-37
Hyspeed HT2000 Optional Machine Torch 9-39
Torch Mounting Bracket 9-39
Torch Leads, Leads, Cables, and Hoses 9-40
Consumable Parts Kits 9-50
Lead Packages 9-54
Power Supply to Remote High Frequency Console – Cables and Hoses 9-54
Remote High Frequency Console to Gas Console - Hoses 9-54
Gas Console to Motor Valve Console – Hoses 9-54
Recommended Spare Parts 9-55
Power Supply 9-55
Remote High Frequency Console 9-55
Gas Console 9-56
Motor Valve Console 9-56

Section 10 WIRING DIAGRAMS 10-1
Introduction 10-1
Wiring Diagram Symbols 10-1
System Wiring Diagrams 10-5

Appendix A IEC SYMBOLS a-1
IEC Symbols Used a-1

Appendix B PROPYLENE GLYCOL SAFETY DATA b-2
BENZOTRIAZOLE SAFETY DATA b-10

Appendix C AERATION MANIFOLD c-1

Appendix D AIR FILTERS d-1

Appendix E ELECTROMAGNETIC COMPATIBILITY (EMC) e-1
General e-2
Power Cable e-2

Connect Power Cable e-2
Power Supply e-2
Line Disconnect Switch e-4
EMI Filter Parts List e-5

Appendix F SYSTEM GROUNDING g-1
System Grounding Requirements g-1
Suggested Ground Cable Routing g-1
Power Supply g-1
Equipment Grounding g-1
Work Table Grounding g-2

Section 1

SAFETY

In this section:

Recognize Safety Information....1-2
Follow Safety Instructions....1-2
Cutting Can Cause Fire or Explosion....1-2
Electric Shock Can Kill....1-3
Cutting Can Produce Toxic Fumes....1-3
A Plasma Arc Can Cause Injury and Burns....1-4
Arc Rays Can Burn Eyes and Skin....1-4
Grounding Safety....1-4
Compressed Gas Equipment Safety....1-5
Gas Cylinders Can Explode If Damaged....1-5
Noise Can Damage Hearing....1-5
Pacemaker and Hearing Aid Operation....1-5
A Plasma Arc Can Damage Frozen Pipes....1-5
Additional Safety Information....1-5
Warning Label....1-6

RECOGNIZE SAFETY INFORMATION

The symbols shown in this section are used to identify potential hazards. When you see a safety symbol in this manual or on your machine, understand the potential for personal injury, and follow the related instructions to avoid the hazard.

FOLLOW SAFETY INSTRUCTIONS

Read carefully all safety messages in this manual and safety labels on your machine.

- Keep the safety labels on your machine in good condition. Replace missing or damaged labels immediately.
- Learn how to operate the machine and how to use the controls properly. Do not let anyone operate it without instruction.
- Keep your machine in proper working condition. Unauthorized modifications to the machine may affect safety and machine service life.

DANGER WARNING CAUTION

A signal word DANGER or WARNING is used with a safety symbol. DANGER identifies the most serious hazards.

- DANGER and WARNING safety labels are located on your machine near specific hazards.
- WARNING safety messages precede related instructions in this manual that may result in injury or death if not followed correctly.
- CAUTION safety messages precede related instructions in this manual that may result in damage to equipment if not followed correctly.

CUTTING CAN CAUSE FIRE OR EXPLOSION

Fire Prevention

- Be sure the area is safe before doing any cutting. Keep a fire extinguisher nearby.
- Remove all flammables within 35 feet (10 m) of the cutting area.
- Quench hot metal or allow it to cool before handling or before letting it touch combustible materials.
- Never cut containers with potentially flammable materials inside – they must be emptied and properly cleaned first.
- Ventilate potentially flammable atmospheres before cutting.
- When cutting with oxygen as the plasma gas, an exhaust ventilation system is required.

Explosion Prevention

- Do not use the plasma system if explosive dust or vapors may be present.
- Do not cut pressurized cylinders, pipes, or any closed container.
- Do not cut containers that have held combustible materials.

WARNING

Explosion Hazard
Argon-Hydrogen and Methane

Hydrogen and methane are flammable gases that present an explosion hazard. Keep flames away from cylinders and hoses that contain methane or hydrogen mixtures. Keep flames and sparks away from the torch when using methane or argon-hydrogen plasma.

WARNING

Hydrogen Detonation with Aluminum Cutting

- When cutting aluminum underwater, or with the water touching the underside of the aluminum, free hydrogen gas may collect under the workpiece and detonate during plasma cutting operations.
- Install an aeration manifold on the floor of the water table to eliminate the possibility of hydrogen detonation. Refer to the Appendix section of this manual for aeration manifold details.

ELECTRIC SHOCK CAN KILL

Touching live electrical parts can cause a fatal shock or severe burn.

- Operating the plasma system completes an electrical circuit between the torch and the workpiece. The workpiece and anything touching the workpiece are part of the electrical circuit.
- Never touch the torch body, workpiece or the water in a water table when the plasma system is operating.

Electric Shock Prevention

All Hypertherm plasma systems use high voltage in the cutting process (200 to 400 VDC are common). Take the following precautions when operating this system:

- Wear insulated gloves and boots, and keep your body and clothing dry.
- Do not stand, sit or lie on – or touch – any wet surface when using the plasma system.
- Insulate yourself from work and ground using dry insulating mats or covers big enough to prevent any physical contact with the work or ground. If you must work in or near a damp area, use extreme caution.
- Provide a disconnect switch close to the power supply with properly sized fuses. This switch allows the operator to turn off the power supply quickly in an emergency situation.
- When using a water table, be sure that it is correctly connected to earth ground.
- Install and ground this equipment according to the instruction manual and in accordance with national and local codes.
- Inspect the input power cord frequently for damage or cracking of the cover. Replace a damaged power cord immediately. **Bare wiring can kill.**
- Inspect and replace any worn or damaged torch leads.
- Do not pick up the workpiece, including the waste cutoff, while you cut. Leave the workpiece in place or on the workbench with the work cable attached during the cutting process.
- Before checking, cleaning or changing torch parts, disconnect the main power or unplug the power supply.
- Never bypass or shortcut the safety interlocks.
- Before removing any power supply or system enclosure cover, disconnect electrical input power. Wait 5 minutes after disconnecting the main power to allow capacitors to discharge.
- Never operate the plasma system unless the power supply covers are in place. Exposed power supply connections present a severe electrical hazard.
- When making input connections, attach proper grounding conductor first.
- Each Hypertherm plasma system is designed to be used only with specific Hypertherm torches. Do not substitute other torches which could overheat and present a safety hazard.

CUTTING CAN PRODUCE TOXIC FUMES

Cutting can produce toxic fumes and gases that deplete oxygen and cause injury or death.

- Keep the cutting area well ventilated or use an approved air-supplied respirator.
- Do not cut in locations near degreasing, cleaning or spraying operations. The vapors from certain chlorinated solvents decompose to form phosgene gas when exposed to ultraviolet radiation.
- Do not cut metal coated or containing toxic materials, such as zinc (galvanized), lead, cadmium or beryllium, unless the area is well ventilated and the operator wears an air-supplied respirator. The coatings and any metals containing these elements can produce toxic fumes when cut.
- Never cut containers with potentially toxic materials inside – they must be emptied and properly cleaned first.
- This product, when used for welding or cutting, produces fumes or gases which contain chemicals known to the State of California to cause birth defects and, in some cases, cancer.

A PLASMA ARC CAN CAUSE INJURY AND BURNS

Instant-On Torches
Plasma arc comes on immediately when the torch switch is activated.

The plasma arc will cut quickly through gloves and skin.
- Keep away from the torch tip.
- Do not hold metal near the cutting path.
- Never point the torch toward yourself or others.

ARC RAYS CAN BURN EYES AND SKIN

Eye Protection Plasma arc rays produce intense visible and invisible (ultraviolet and infrared) rays that can burn eyes and skin.
- Use eye protection in accordance with applicable national or local codes.
- Wear eye protection (safety glasses or goggles with side shields, and a welding helmet) with appropriate lens shading to protect your eyes from the arc's ultraviolet and infrared rays.

Arc Current	Lens Shade AWS (USA)	Lens Shade ISO 4850
Up to 100 A	No. 8	No. 11
100-200 A	No. 10	No. 11-12
200-400 A	No. 12	No. 13
Over 400 A	No. 14	No. 14

Skin Protection Wear protective clothing to protect against burns caused by ultraviolet light, sparks and hot metal.
- Gauntlet gloves, safety shoes and hat.
- Flame-retardant clothing to cover all exposed areas.
- Cuffless trousers to prevent entry of sparks and slag.
- Remove any combustibles, such as a butane lighter or matches, from your pockets before cutting.

Cutting Area Prepare the cutting area to reduce reflection and transmission of ultraviolet light:
- Paint walls and other surfaces with dark colors to reduce reflection.
- Use protective screens or barriers to protect others from flash and glare.
- Warn others not to watch the arc. Use placards or signs.

GROUNDING SAFETY

Work Cable Attach the work cable securely to the workpiece or the work table with good metal-to-metal contact. Do not connect it to the piece that will fall away when the cut is complete.

Work Table Connect the work table to an earth ground, in accordance with appropriate national or local electrical codes.

Input Power
- Be sure to connect the power cord ground wire to the ground in the disconnect box.
- If installation of the plasma system involves connecting the power cord to the power supply, be sure to connect the power cord ground wire properly.
- Place the power cord's ground wire on the stud first, then place any other ground wires on top of the power cord ground. Fasten the retaining nut tightly.
- Tighten all electrical connections to avoid excessive heating.

COMPRESSED GAS EQUIPMENT SAFETY

- Never lubricate cylinder valves or regulators with oil or grease.
- Use only correct gas cylinders, regulators, hoses and fittings designed for the specific application.
- Maintain all compressed gas equipment and associated parts in good condition.
- Label and color-code all gas hoses to identify the type of gas in each hose. Consult applicable national or local codes.

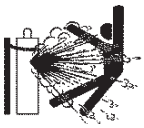

GAS CYLINDERS CAN EXPLODE IF DAMAGED

Gas cylinders contain gas under high pressure. If damaged, a cylinder can explode.

- Handle and use compressed gas cylinders in accordance with applicable national or local codes.
- Never use a cylinder that is not upright and secured in place.
- Keep the protective cap in place over valve except when the cylinder is in use or connected for use.
- Never allow electrical contact between the plasma arc and a cylinder.
- Never expose cylinders to excessive heat, sparks, slag or open flame.
- Never use a hammer, wrench or other tool to open a stuck cylinder valve.

NOISE CAN DAMAGE HEARING

Prolonged exposure to noise from cutting or gouging can damage hearing.

- Use approved ear protection when using plasma system.
- Warn others nearby about the noise hazard.

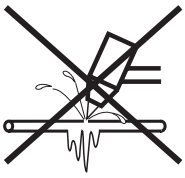

A PLASMA ARC CAN DAMAGE FROZEN PIPES

Frozen pipes may be damaged or can burst if you attempt to thaw them with a plasma torch.

PACEMAKER AND HEARING AID OPERATION

Pacemaker and hearing aid operation can be affected by magnetic fields from high currents.
Pacemaker and hearing aid wearers should consult a doctor before going near any plasma arc cutting and gouging operations.

To reduce magnetic field hazards:

- Keep both the work cable and the torch lead to one side, away from your body.
- Route the torch leads as close as possible to the work cable.
- Do not wrap or drape the torch lead or work cable around your body.
- Keep as far away from the power supply as possible.

ADDITIONAL SAFETY INFORMATION

1. ANSI Standard Z49.1, *Safety in Welding and Cutting,* American Welding Society, 550 LeJeune Road P.O. Box 351020, Miami, FL 33135
2. ANSI Standard Z49.2, *Fire Prevention in the Use of Cutting and Welding Processes,* American National Standards Institute 1430 Broadway, New York, NY 10018
3. ANSI Standard Z87.1, *Safe Practices for Occupation and Educational Eye and Face Protection,* American National Standards Institute, 1430 Broadway, New York, NY 10018
4. AWS F4.1, *Recommended Safe Practices for the Preparation for Welding and Cutting of Containers and Piping That Have Held Hazardous Substances,* American Welding Society 550 LeJeune Road, P.O. Box 351040, Miami, FL 33135
5. AWS F5.2, *Recommended Safe Practices for Plasma Arc Cutting,* American Welding Society 550 LeJeune Road, P.O. Box 351040, Miami, FL 33135
6. CGA Pamphlet P-1, *Safe Handling of Compressed Gases in Cylinders,* Compressed Gas Association 1235 Jefferson Davis Highway, Arlington, VA 22202
7. CSA Standard W117.2, *Code for Safety in Welding and Cutting,* Canadian Standards Association Standard Sales 178 Rexdale Boulevard, Rexdale, Ontario M9W 1R3, Canada
8. NFPA Standard 51B, *Cutting and Welding Processes,* National Fire Protection Association 470 Atlantic Avenue, Boston, MA 02210
9. NFPA Standard 70–1978, *National Electrical Code,* National Fire Protection Association, 470 Atlantic Avenue, Boston, MA 02210
10. OSHA, *Safety and Health Standards,* 29FR 1910 U.S. Government Printing Office, Washington, D.C. 20402

WARNING LABEL

This warning label is affixed to some power supplies. It is important that the operator and maintenance technician understand the intent of these warning symbols as described. The numbered text corresponds to the numbered boxes on the label.

1. Cutting sparks can cause explosion or fire.

1.1 Keep flammables away from cutting.

1.2 Keep a fire extinguisher nearby, and have a watchperson ready to use it.

1.3 Do not cut on any closed containers.

2. The plasma arc can cause injury and burns.

2.1 Turn off power before disassembling torch.

2.2 Do not hold the material near cutting path.

2.3 Wear complete body protection.

3. Electric shock from torch or wiring can kill. Protect yourself from electric shock.

3.1 Wear insulating gloves. Do not wear wet or damaged gloves.

3.2 Insulate yourself from work and ground.

3.3 Disconnect input plug or power before working on machine.

4. Breathing cutting fumes can be hazardous to your health.

4.1 Keep your head out of the fumes.

4.2 Use forced ventilation or local exhaust to remove the fumes.

4.3 Use ventilating fan to remove the fumes.

5. Arc rays can burn eyes and injure skin.

5.1 Wear hat and safety glasses. Use ear protection and button shirt collar. Use welding helmet with correct shade of filter. Wear complete body protection.

6. Become trained and read the instructions before working on the machine or cutting.

7. Do not remove or paint over (cover) warning labels.

Hypertherm

Section 1a

SÉCURITÉ

Dans cette section :

Identifier les consignes de sécurité....1a-2
Suivre les instructions de sécurité....1a-2
Danger Avertissement Précaution....1a-2
Le coupage peut provoquer un incendie ou une explosion....1a-2
Prévention des incendies, Prévention des explosions....1a-2
Risque d'explosion argon-hydrogène et méthane....1a-2
Détonation de l'hydrogène lors du coupage de l'aluminium....1a-2
Les chocs électriques peuvent être fatals....1a-3
Prévention des chocs électriques....1a-3
Le coupage peut produire des vapeurs toxiques....1a-3
L'arc plasma peut provoquer des blessures ou des brûlures....1a-4
Torches à allumage instantané....1a-4
Les rayons de l'arc peuvent brûler les yeux et la peau....1a-4
Protection des yeux, Protection de la peau, Zone de coupage....1a-4
Mise à la masse et à la terre....1a-4
Câble de retour, Table de travail, Alimentation....1a-4
Sécurité des bouteilles de gaz comprimé....1a-5
Les bouteilles de gaz comprimé peuvent exploser en cas de dommages....1a-5
Le bruit peut provoquer des problèmes auditifs....1a-5
Pacemakers et prothèses auditives....1a-5
Un arc plasma peut endommager les tuyaux gelés....1a-5
Étiquette de sécurité....1a-6

IDENTIFIER LES CONSIGNES DE SÉCURITÉ

Les symboles indiqués dans cette section sont utilisés pour identifier les risques éventuels. Si vous trouvez un symbole de sécurité, que ce soit dans ce manuel ou sur l'équipement, soyez conscient des risques de blessures et suivez les instructions correspondantes afin d'éviter ces risques.

SUIVRE LES INSTRUCTIONS DE SÉCURITÉ

Lire attentivement toutes les consignes de sécurité dans le présent manuel et sur les étiquettes de sécurité se trouvant sur la machine.

- Les étiquettes de sécurité doivent rester lisibles. Remplacer immédiatement les étiquettes manquantes ou abîmées.
- Apprendre à faire fonctionner la machine et à utiliser correctement les commandes. Ne laisser personne utiliser la machine sans connaître son fonctionnement.
- Garder la machine en bon état. Des modifications non autorisées sur la machine peuvent engendrer des problèmes de sécurité et raccourcir la durée d'utilisation de l'équipement.

DANGER AVERTISSEMENT PRÉCAUTION

Les signaux DANGER ou AVERTISSEMENT sont utilisés avec un symbole de sécurité, DANGER correspondant aux risques les plus sérieux.

- Les étiquettes de sécurité DANGER et AVERTISSEMENT sont situées sur la machine pour signaler certains dangers spécifiques.
- Les messages d'AVERTISSEMENT précèdent les instructions d'utilisation expliquées dans ce manuel et signalent les risques de blessures ou de mort au cas où ces instructions ne seraient pas suivies correctement.
- Les messages de PRÉCAUTION précèdent les instructions d'utilisation contenues dans ce manuel et signalent que le matériel risque d'être endommagé si les instructions ne sont pas suivies correctement.

LE COUPAGE PEUT PROVOQUER UN INCENDIE OU UNE EXPLOSION

Prévention des incendies

- Avant de commencer, s'assurer que la zone de coupage ne présente aucun danger. Conserver un extincteur à proximité.
- Éloigner toute matière inflammable à une distance d'au moins 10 m du poste de coupage.
- Tremper le métal chaud ou le laisser refroidir avant de le manipuler ou avant de le mettre en contact avec des matériaux combustibles.
- Ne jamais couper des récipients pouvant contenir des matières inflammables avant de les avoir vidés et nettoyés correctement.
- Aérer toute atmosphère potentiellement inflammable avant d'utiliser un système plasma.
- Lors de l'utilisation d'oxygène comme gaz plasma, un système de ventilation par aspiration est nécessaire.

Prévention des explosions

- Ne pas couper en présence de poussière ou de vapeurs.
- Ne pas couper de bouteilles, de tuyaux ou autres récipients fermés et pressurisés.
- Ne pas couper de récipients contenant des matières combustibles.

AVERTISSEMENT

Risque d'explosion
argon-hydrogène et méthane

L'hydrogène et le méthane sont des gaz inflammables et potentiellement explosifs. Conserver à l'écart de toute flamme les bouteilles et tuyaux contenant des mélanges à base d'hydrogène ou de méthane. Maintenir toute flamme et étincelle à l'écart de la torche lors de l'utilisation d'un plasma d'argon-hydrogène ou de méthane.

AVERTISSEMENT

Détonation de l'hydrogène lors du coupage de l'aluminium

- Lors du coupage de l'aluminium sous l'eau, ou si l'eau touche la partie inférieure de la pièce d'aluminium, de l'hydrogène libre peut s'accumuler sous la pièce à couper et détonner lors du coupage plasma.
- Installer un collecteur d'aération au fond de la table à eau afin d'éliminer les risques de détonation de l'hydrogène. Se référer à l'annexe du manuel pour plus de renseignements sur les collecteurs d'aération.

LES CHOCS ÉLECTRIQUES PEUVENT ÊTRE FATALS

Toucher une pièce électrique sous tension peut provoquer un choc électrique fatal ou des brûlures graves.

- La mise en fonctionnement du système plasma ferme un circuit électrique entre la torche et la pièce à couper. La pièce à couper et tout autre élément en contact avec cette pièce font partie du circuit électrique.
- Ne jamais toucher le corps de la torche, la pièce à couper ou l'eau de la table à eau pendant le fonctionnement du système plasma.

Prévention des chocs électriques

Tous les systèmes plasma Hypertherm utilisent des hautes tensions pour le coupage (souvent de 200 à 400 V). On doit prendre les précautions suivantes quand on utilise le système plasma :

- Porter des bottes et des gants isolants et garder le corps et les vêtements au sec.
- Ne pas se tenir, s'asseoir ou se coucher sur une surface mouillée, ni la toucher quand on utilise le système plasma.
- S'isoler de la surface de travail et du sol en utilisant des tapis isolants secs ou des couvertures assez grandes pour éviter tout contact physique avec le travail ou le sol. S'il s'avère nécessaire de travailler dans ou près d'un endroit humide, procéder avec une extrême prudence.
- Installer un sectionneur avec fusibles appropriés, à proximité de la source de courant. Ce dispositif permet à l'opérateur d'arrêter rapidement la source de courant en cas d'urgence.
- En cas d'utilisation d'une table à eau, s'assurer que cette dernière est correctement mise à la terre.
- Installer et mettre à la terre l'équipement selon les instructions du présent manuel et conformément aux codes électriques locaux et nationaux.
- Inspecter fréquemment le cordon d'alimentation primaire pour s'assurer qu'il n'est ni endommagé, ni fendu. Remplacer immédiatement un cordon endommagé. **Un câble dénudé peut tuer**.
- Inspecter et remplacer les câbles de la torche qui sont usés ou endommagés.
- Ne pas saisir la pièce à couper ni les chutes lors du coupage. Laisser la pièce à couper en place ou sur la table de travail, le câble de retour connecté lors du coupage.
- Avant de vérifier, de nettoyer ou de remplacer les pièces de la torche, couper l'alimentation ou débrancher la prise de courant.
- Ne jamais contourner ou court-circuiter les verrouillages de sécurité.
- Avant d'enlever le capot du système ou de la source de courant, couper l'alimentation électrique. Attendre ensuite 5 minutes pour que les condensateurs se déchargent.
- Ne jamais faire fonctionner le système plasma sans que les capots de la source de courant ne soient en place. Les raccords exposés de la source de courant sont extrêmement dangereux.
- Lors de l'installation des connexions, attacher tout d'abord la prise de terre appropriée.
- Chaque système plasma Hypertherm est conçu pour être utilisé uniquement avec des torches Hypertherm spécifiques. Ne pas utiliser des torches inappropriées qui pourraient surchauffer et présenter des risques pour la sécurité.

LE COUPAGE PEUT PRODUIRE DES VAPEURS TOXIQUES

Le coupage peut produire des vapeurs et des gaz toxiques qui réduisent le niveau d'oxygène dans l'air et peuvent provoquer des blessures, voire la mort.

- Conserver le poste de coupage bien aéré ou utiliser un masque respiratoire homologué.
- Ne pas procéder au coupage près d'endroits où s'effectuent le dégraissage, le nettoyage ou la vaporisation. Certains solvants chlorés se décomposent sous l'effet des rayons ultraviolets et forment du phosgène.
- Ne pas couper des métaux peints ou contenant des matières toxiques comme le zinc (galvanisé), le plomb, le cadmium ou le béryllium, à moins que la zone de travail soit très bien ventilée et que l'opérateur porte un masque respiratoire. Les revêtements et métaux contenant ces matières peuvent produire des vapeurs toxiques lors du coupage.
- Ne jamais couper de récipients pouvant contenir des matières inflammables avant de les avoir vidés et nettoyés correctement.
- Quand on utilise ce produit pour le soudage ou le coupage, il dégage des fumées et des gaz qui contiennent des produits chimiques qui, selon l'État de Californie, provoquent des anomalies congénitales et, dans certains cas, le cancer.

L'ARC PLASMA PEUT PROVOQUER DES BLESSURES OU DES BRÛLURES

Torches à allumage instantané

L'arc plasma s'allume immédiatement après que la torche soit mise en marche.

L'arc plasma coupe facilement les gants et la peau.

- Rester éloigné de l'extrémité de la torche.
- Ne pas tenir de métal près de la trajectoire de coupe.
- Ne jamais pointer la torche vers soi ou d'autres personnes.

LES RAYONS DE L'ARC PEUVENT BRÛLER LES YEUX ET LA PEAU

Protection des yeux Les rayons de l'arc plasma produisent de puissants rayons visibles ou invisibles (ultraviolets et infrarouges) qui peuvent brûler les yeux et la peau.

- Utiliser des lunettes de sécurité conformément aux codes locaux ou nationaux en vigueur.
- Porter des lunettes de protection (lunettes ou masque muni d'écrans latéraux et encore masque de soudure) avec des verres teintés appropriés pour protéger les yeux des rayons ultraviolets et infrarouges de l'arc.

Courant de l'arc	Puissance des verres teintés AWS (É.-U.)	ISO 4850
Jusqu'à 100 A	N^{O} 8	N^{O} 11
100-200 A	N^{O} 10	N^{O} 11-12
200-400 A	N^{O} 12	N^{O} 13
Plus de 400 A	N^{O} 14	N^{O} 14

Protection de la peau Porter des vêtements de sécurité pour se protéger contre les brûlures que peuvent causer les rayons ultraviolets, les étincelles et le métal brûlant :

- Gants à crispin, chaussures et casque de sécurité.
- Vêtements ignifuges couvrant toutes les parties exposées du corps.
- Pantalon sans revers pour éviter que des étincelles ou des scories puissent s'y loger.
- Avant le coupage, retirer de ses poches tout objet combustible comme les briquets au butane ou les allumettes.

Zone de coupage Préparer la zone de coupage afin de réduire la réverbération et la transmission de la lumière ultraviolette :

- Peindre les murs et autres surfaces de couleur sombre pour réduire la réflexion de la lumière.
- Utiliser des écrans et autres dispositifs de protection afin de protéger les autres personnes de la lumière et de la réverbération.
- Prévenir les autres personnes de ne pas regarder l'arc. Utiliser des affiches ou des panneaux.

MISE À LA MASSE ET À LA TERRE

Câble de retour Bien fixer le câble de retour (ou de masse) à la pièce à couper ou à la table de travail de façon à assurer un bon contact métal-métal. Ne pas fixer le câble de retour à la partie de la pièce qui doit se détacher.

Table de travail Raccorder la table de travail à la terre, conformément aux codes de sécurité locaux ou nationaux appropriés.

Alimentation

- S'assurer que le fil de terre du cordon d'alimentation est connecté à la terre dans le coffret du sectionneur.
- S'il est nécessaire de brancher le cordon d'alimentation à la source de courant lors de l'installation du système, s'assurer que le fil de terre est correctement branché.
- Placer tout d'abord le fil de terre du cordon d'alimentation sur le plot de mise à la terre puis placer les autres fils de terre par-dessus. Bien serrer l'écrou de retenue.
- S'assurer que toutes les connexions sont bien serrées pour éviter la surchauffe.

SÉCURITÉ DES BOUTEILLES DE GAZ COMPRIMÉ

- Ne jamais lubrifier les robinets des bouteilles ou les régulateurs avec de l'huile ou de la graisse.
- Utiliser uniquement les bouteilles, régulateurs, tuyaux et accessoires appropriés et conçus pour chaque application spécifique.
- Entretenir l'équipement et les pièces d'équipement à gaz comprimé afin de les garder en bon état.
- Étiqueter et coder avec des couleurs tous les tuyaux de gaz afin d'identifier le type de gaz contenu dans chaque tuyau. Se référer aux codes locaux ou nationaux en vigueur.

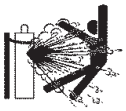

LES BOUTEILLES DE GAZ COMPRIMÉ PEUVENT EXPLOSER EN CAS DE DOMMAGES

Les bouteilles de gaz contiennent du gaz à haute pression. Si une bouteille est endommagée, elle peut exploser.

- Manipuler et utiliser les bouteilles de gaz comprimé conformément aux codes locaux ou nationaux.
- Ne jamais utiliser une bouteille qui n'est pas placée à la verticale et bien assujettie.
- Le capuchon de protection doit être placé sur le robinet sauf si la bouteille est en cours d'utilisation ou connectée pour utilisation.
- Éviter à tout prix le contact électrique entre l'arc plasma et une bouteille.
- Ne jamais exposer des bouteilles à une chaleur excessive, aux étincelles, aux scories ou aux flammes nues.
- Ne jamais utiliser des marteaux, des clés ou d'autres outils pour débloquer le robinet des bouteilles.

LE BRUIT PEUT PROVOQUER DES PROBLÈMES AUDITIFS

Une exposition prolongée au bruit du coupage ou du gougeage peut provoquer des problèmes auditifs.

- Utiliser un casque de protection homologué lors de l'utilisation du système plasma.
- Prévenir les personnes aux alentours des risques encourus en cas d'exposition au bruit.

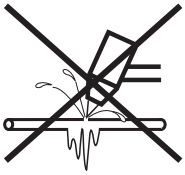

UN ARC PLASMA PEUT ENDOMMAGER LES TUYAUX GELÉS

Les tuyaux gelés peuvent être endommagés ou éclater si l'on essaie de les dégeler avec une torche plasma.

PACEMAKERS ET PROTHÈSES AUDITIVES

Les champs magnétiques produits par les courants à haute tension peuvent affecter le fonctionnement des prothèses auditives et des pacemakers. Les personnes portant ce type d'appareil doivent consulter un médecin avant de s'approcher d'un lieu où s'effectue le coupage ou le gougeage plasma.

Pour réduire les risques associés aux champs magnétiques :

- Garder loin de soi et du même côté du corps le câble de retour et le faisceau de la torche.
- Faire passer le faisceau de la torche le plus près possible du câble de retour.
- Ne pas s'enrouler le faisceau de la torche ou le câble de retour autour du corps.
- Se tenir le plus loin possible de la source de courant.

Étiquette de sécurité

Cette étiquette est affichée sur la source de courant. Il est important que l'utilisateur et le technicien de maintenance comprennent la signification des symboles de sécurité. Les numéros de la liste correspondent aux numéros des images.

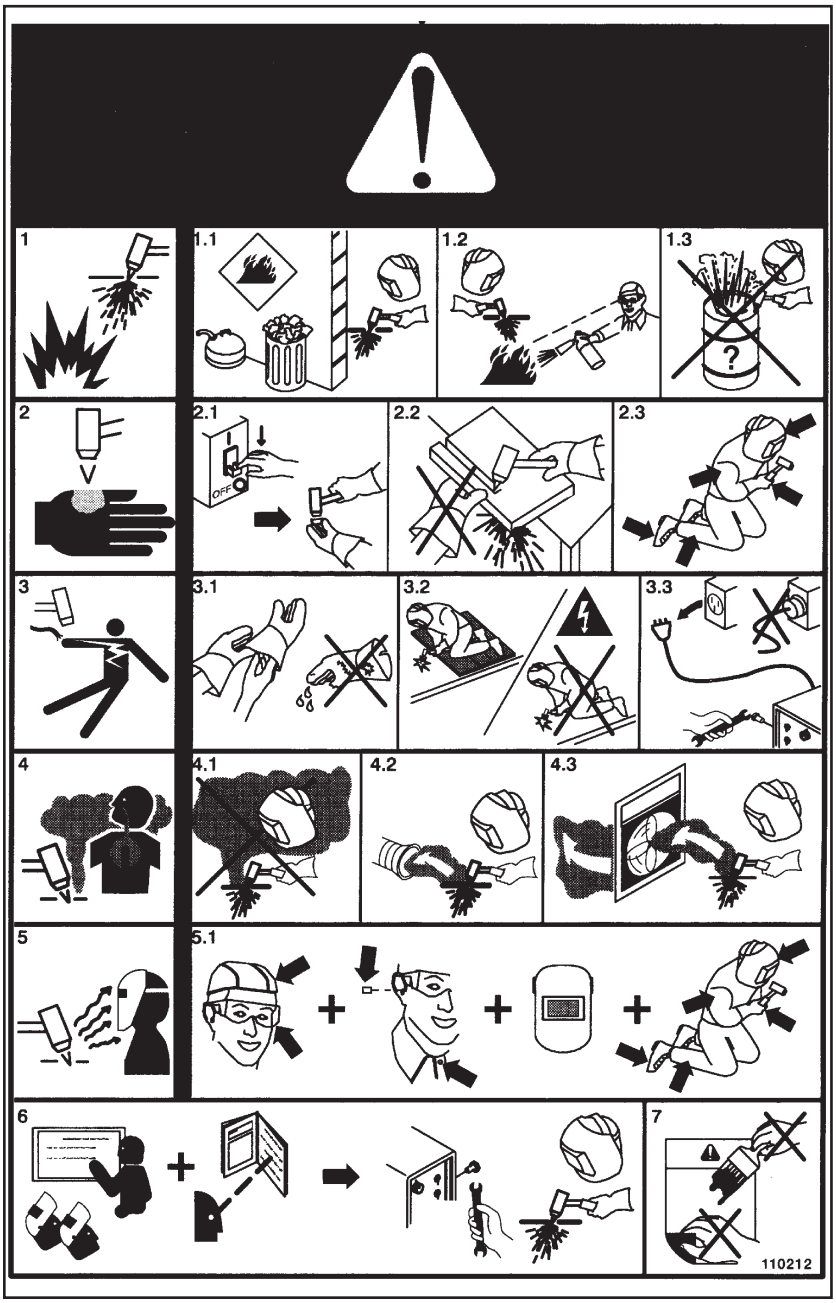

1. Les étincelles produites par le coupage peuvent provoquer une explosion ou un incendie.

1.1 Pendant le coupage, éloigner toute matière inflammable.

1.2 Conserver un extincteur à proximité et s'assurer qu'une personne soit prête à l'utiliser.

1.3 Ne jamais couper de récipients fermés.

2. L'arc plasma peut provoquer des blessures et des brûlures.

2.1 Couper l'alimentation avant de démonter la torche.

2.2 Ne pas tenir la surface à couper près de la trajectoire de coupe.

2.3 Porter des vêtements de protection couvrant tout le corps.

3. Un choc électrique causé par la torche ou les câbles peut être fatal. Se protéger contre les risques de chocs électriques.

3.1 Porter des gants isolants. Ne pas porter de gants mouillés ou abîmés.

3.2 S'isoler de la surface de travail et du sol.

3.3 Débrancher la prise ou la source de courant avant de manipuler l'équipement.

4. L'inhalation des vapeurs produites par le coupage peut être dangereuse pour la santé.

4.1 Garder le visage à l'écart des vapeurs.

4.2 Utiliser un système de ventilation par aspiration ou d'échappement localisé pour dissiper les vapeurs.

4.3 Utiliser un ventilateur pour dissiper les vapeurs.

5. Les rayons de l'arc peuvent brûler les yeux et provoquer des lésions de la peau.

5.1 Porter un casque et des lunettes de sécurité. Se protéger les oreilles et porter une chemise dont le col peut être déboutonné. Porter un casque de soudure dont la protection filtrante est suffisante. Porter des vêtements protecteurs couvrant la totalité du corps.

6. Se former à la technique du coupage et lire les instructions avant de manipuler l'équipement ou de procéder au coupage.

7. Ne pas retirer ou peindre (recouvrir) les étiquettes de sécurité.

Section 2

SPECIFICATIONS

In this section:

Introduction 2-2
Power Supply 2-2
Remote High Frequency (RHF) Console 2-2
Gas Console 2-3
Motor Valve Console 2-3
Argon-Hydrogen Console 2-3
Remote Voltage/Current (V/C) Control 2-3
Initial Height Sensing (IHS) 2-4
Timer/Counter 2-4
Water Muffler 2-4
Specifications 2-5
System Requirements 2-5
Power Supply 2-5
HYSpeed HT2000 Machine Torches 2-6
Remote High Frequency Console 2-6
Gas Console 2-7
Motor Valve Console 2-7
Argon/Hydrogen Console 2-8
Digital Remote (DR) V/C Control 2-8
Programmable Remote (PR) V/C Control 2-9
Initial Height Sensing 2-10
Timer/Counter 2-10
Water Muffler 2-10

Introduction

Hypertherm's HT2000 is designed as a machine-mounted plasma cutting system for cutting most metals from gauge to two-inch (50mm) thick. A micro-controller on the power supply control board helps to provide extended life for the torch consumable parts. To achieve consumable long life, **all cuts must begin and end on the plate surface**; this allows for the proper ramping of gases and DC current to extend the life of the torch nozzle and electrode.

The HT2000 system provides the user with capability of locating the power supply and the torch apart by a maximum of 200 feet. This is accomplished by using a remote high frequency (RHF) console.

The HT2000 provides continuously variable current output from 40 to 200 amps for optimum performance on all thicknesses of metal. This allows the operator wide variations in cutting speeds on the same thickness of metal. Three nozzle sizes are provided to produce high quality cuts throughout its range of cut thicknesses.

The HT2000 can be configured for air, oxygen, nitrogen, or argon/hydrogen cutting. For cutting stainless steel, aluminum, and other non-ferrous materials, nitrogen or argon-hydrogen can be used as the plasma gas. (Hypertherm recommends a mixture of 35% hydrogen and 65% argon). When cutting mild (carbon) steel, oxygen can be used as the plasma gas. Shield gases other than air which can be used are nitrogen and carbon dioxide.

The following descriptions briefly describe the purpose and configuration of the major units which comprise the HT2000 system.

Power Supply

This unit houses two 100-amp, 15kHz chopper power supplies to produce constant current DC output, variable from 40 to 200 amps. Also located in this unit is the Torch Height Control (THC). The power supply interconnects with the RHF console, the gas console, the motor valve console, the machine computer, the remote V/C, the IHS, water muffler, and the workpiece.

An EMI filter comes standard with the 400V CE power supplies. Refer to Appendix E to connect incoming power to the filter and to find filter part number information.

Remote High Frequency (RHF) Console

This unit houses the high frequency starting circuit which permits more effective RF shielding and allows the power supplies to be installed at a distance of up to 200 feet from the torch. Also located in the console is a door interlock switch, a torch cap-sensing switch and valve, and the shield gas valve. The RHF console interfaces with the power supply, gas console, and the torch.

Gas Console

This unit houses metering and solenoid valves for shield and plasma gases, flow meters and pressure gauges for nitrogen and oxygen plasma, and a pressure gauge for the shield gas supply. The gas console interfaces with the plasma and shield gas supplies, the power supply, the RHF console, and the motor valve console.

Motor Valve Console

This unit houses a motorized metering valve for plasma gas as well as a solenoid valve that switches to allow plasma gas flow for both preflow and operation modes. The motor valve console interfaces with the power supply, gas console and the torch. Note: The motor valve console must be mounted 10 feet (3 m) from the torch.

Argon-Hydrogen Manifold – Optional

This unit houses a flowmeter for argon-hydrogen, a metering valve, a plasma gas outlet switch and a separate plasma-off valve. (The plasma-off valve for nitrogen and oxygen is located at the torch). The argon-hydrogen manifold interfaces with the supply gas, the power supply, and the torch.

Remote Voltage/Current (V/C) Control – Optional

This unit provides accurate operator control of the arc voltage and current. It includes high intensity LED displays which indicate the setpoints for volts and amperes prior to starting the arc. After the arc is initiated, the displays automatically switch to show the actual values of the voltage and current reached. This unit interfaces with the power supply. Two different types of remote V/C controls are available:

Digital Remote - Includes the voltage and current displays and two potentiometers used to select the desired values. It is used with guidance machinery that already includes plasma control switches.

Programmable Remote - Includes the voltage and current displays. No switches or potentiometers are included. All functions are controlled by the guidance machinery computer. This unit also interconnects with the computer interface.

Initial Height Sensing (IHS) – Optional

This unit, used with two inductive probes, is designed to automatically detect the workpiece surface and index the torch to the pierce position. This system can be used for underwater, at the water line, or above-water applications. This unit interconnects with the power supply and the inductive probes, and requires an air supply to operate.

Timer/Counter – Optional

This unit allows the operator to monitor the number of arc starts and the cumulative time that the arc is on in hours. The arc starts can be reset. This unit connects with the power supply.

Water Muffler – Optional

The water muffler for the HT2000 system is an option which greatly improves cutting safety and pollution control capabilities. The water muffler can be used to cut both above and below water. **The water muffler can not be used with the stainless steel machine torch**. Refer to the Water Muffler Instruction Manual (#802050) for more detailed information.

Specifications

System Requirements

Power Requirements:
Refer to power supply specifications below:

Gas Requirements:

Plasma Gas Types	Oxygen (O_2), Nitrogen (N_2), Air, Argon-Hydrogen (65% Argon; 35% Hydrogen)
Shield Gas Types	Air, Nitrogen (N_2), Carbon Dioxide (CO_2)
Gas Quality:	
Oxygen	99.5% pure (liquid gas recommended)
Nitrogen	99.995% pure (liquid gas recommended)
Air	Clean, dry, oil-free (compressed or liquid gas recommended)
Carbon Dioxide	99.5% pure (compressed or liquid gas recommended)

Plasma Gas Inlet Pressures and Flowrates:

Air	90 psi +/- 10 psi (6.2 bar +/- 0.7 bar) at 82 scfh (2322 l/h)
Oxygen	120 psi +/- 10 psi (8.3 bar +/- 0.7 bar) at 90 scfh (2549 l/h)
Nitrogen	120 psi +/- 10 psi (8.3 bar +/- 0.7 bar) at 80 scfh (2265 l/h)
Argon-Hydrogen	120 psi +/- 10 psi (8.3 bar +/- 0.7 bar) at 105 scfh (2973 l/h)

Shield Gas Inlet Pressures and Flowrates:

Air	90 psi +/- 10 psi (6.2 bar +/- 0.7 bar) at 280 scfh (7929 l/h)
Carbon Dioxide	90 psi +/- 10 psi (6.2 bar +/- 0.7 bar) at 220 scfh (6230 l/h)
Nitrogen	90 psi +/- 10 psi (6.2 bar +/- 0.7 bar) at 275 scfh (7787 l/h)
Oxygen	120 psi +/- 10 psi (8.3 bar +/- 0.7 bar) at 35 scfh (991 l/h)

Power Supply

Maximum OCV (U_0)	280 VDC
Output Current (I_2)	40 to 200 amps
Output Voltage (U_2)	150 VDC
Duty Cycle Rating (X)	100% up to 30kW. Beyond 30kW, Duty Cycle (X)= $(30kW/ \text{Actual Power})^2$ Eg: If Actual Power = 32kW, then Duty Cycle (X)= $(30kW/32kW)^2$ = 88%
Ambient Temperatures/Duty Cycle	Power supplies will operate between +14° and 104°F (-10° and +40°C). Power supplies operated in an ambient temperature above 86°F (30°C) may show some decrease in duty cycle.
Power Factor ($\cos\varphi$)	0.86

Input Power (Input Voltage (U_1) x Input Current (I_1))**:**

#073054 with THC/ **#073106** without THC	240/480 VAC, 3PH, 60 Hz, 90/45 amps
#073064 with THC/ **#073105** without THC	208 VAC, 3PH, 60 Hz, 104 amps
#073065 with THC/ **#073107** without THC	220/380/415 VAC, 3PH, 50 Hz, 98/57/52 amps
#073198 with THC/ **#073199** without THC	400 VAC, CE, 3PH, 50 Hz, 56 amps (See Appendix E to connect incoming power)
#073196 with THC	440/460 VAC, 3PH, 50-60 Hz, 49/47 amps
#073063 with THC/ **#073104** without THC	200 VAC, 3PH, 50 Hz, 108 amps
#073066 with THC/ **#073108** without THC	600 VAC, 3PH, 60 Hz, 36 amps

Power Supply (cont.)

Dimensions and Weight:

Width.....28-1/4" (71 cm)
Height .....35-1/2" (90 cm); 40-3/4" (104 cm) on CE units
Depth .....41-1/4" (104 cm)
Weight.....780 pounds (351 kg); 800 pounds (363 kg) on CE units
Cooling .....Forced Air (Class F)

Torch Coolant Tank Capacity .....2.9 gallons (11 liters)

HySpeed HT2000 Machine Torches (#128381,128367 or 128141)

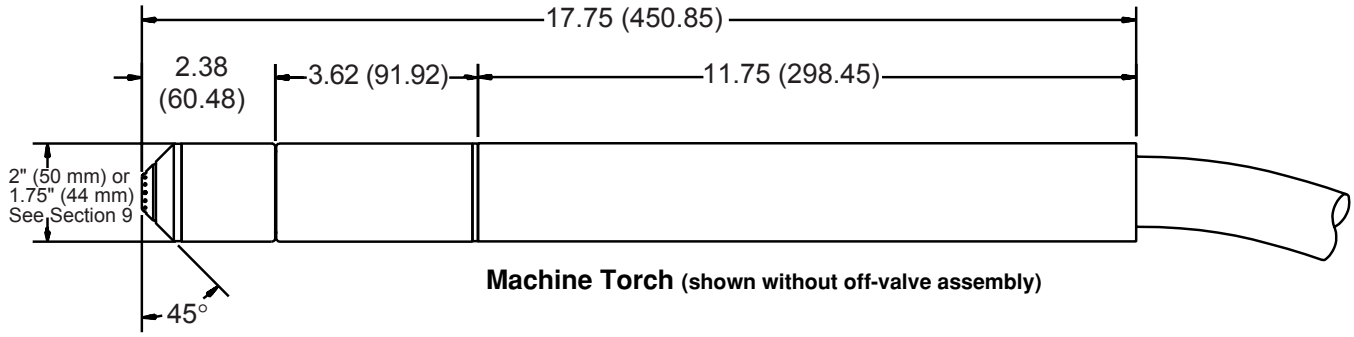

Machine Torch **(shown without off-valve assembly)**

Maximum cutting thickness.....2 inch (50 mm)
Maximum current at 100% duty cycle.....200 amps

Plasma Gas Flow .....Refer to the *Cut Charts* in the **Operation**
Shield Gas Flow .....section for specific gas requirements.

Water coolant flow rate .....0.8 gpm (3.0 l/min)
Weight.....2-1/2 pounds (1.13 kg)

Remote High Frequency Console (#073067)

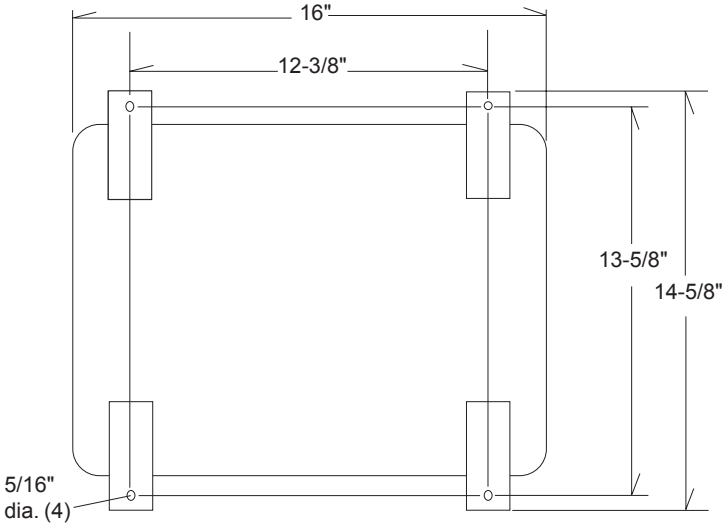

Figure 2-1 Mounting Dimensions – RHF Console

Remote High Frequency Console (cont.)

Dimensions and Weight:
Width.....16" (40.6 cm)
Height .....16.75" (42.5 cm)
Depth .....12.75" (32 cm)
Weight.....75 pounds (34 kg)

Gas Console (#073218)

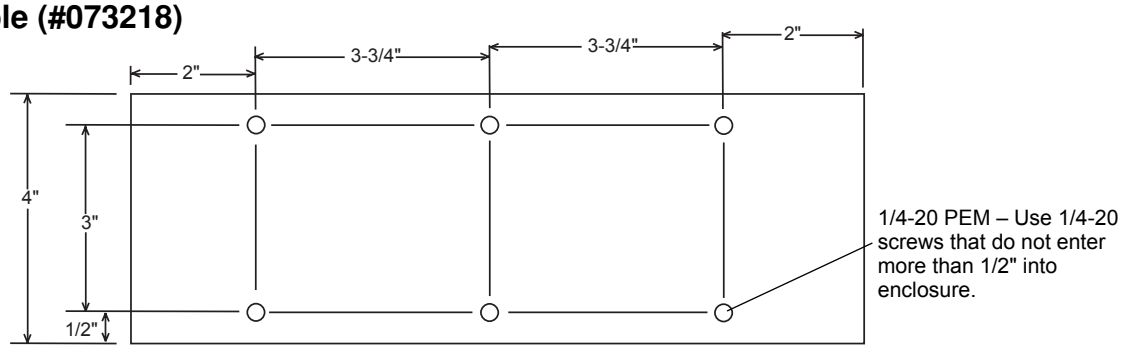

Figure 2-2 Mounting Dimensions – Gas Console

Dimensions and Weight:
Width.....11.5" (29 cm)
Height .....14.5" (37 cm)
Depth .....4" (10 cm)
Weight.....23 pounds (10.4 kg)

Motor Valve Console (#073219)

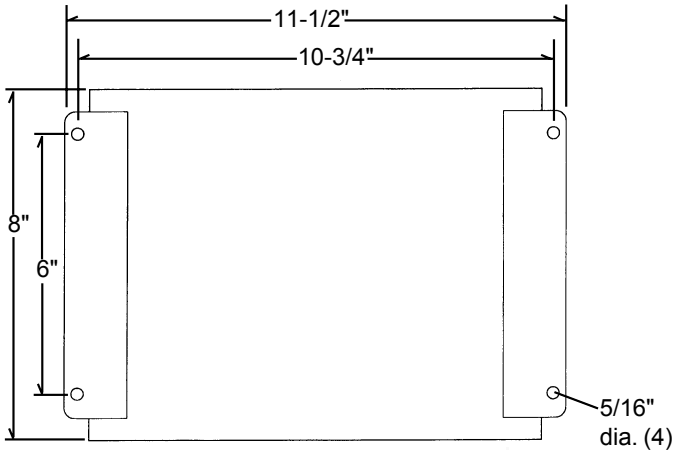

Figure 2-3 Mounting Dimensions - Motor Valve Console

Dimensions and Weight:
Width.....11.5" (29 cm)
Height .....4" (10 cm)
Depth .....8" (20 cm)
Weight.....18 pounds (8.2 kg)

Argon-Hydrogen Manifold (#073109) – Optional

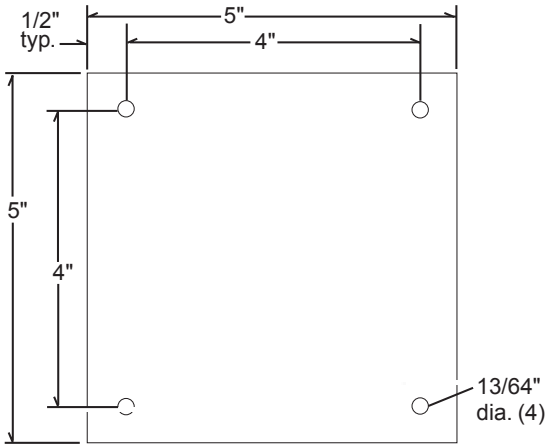

Figure 2-4 Mounting Dimensions - Argon-Hydrogen Manifold

Dimensions and Weight:

Width.....5" (12.7 cm)
Height .....10" (25.4 cm)
Depth .....5" (12.7cm)
Weight.....5-3/4 lb (2.6 kg)

Digital Remote (DR) V/C Control (#073007) – Optional

Controls.....Voltage adjust pot:
Adjusts arc cutting voltage and displays value on LEDs.
Current adjust pot:
Adjusts arc cutting current and displays value on LEDs.

Control Range.....Current: 40 to 200 Amps
Voltage: 100 to 200 Volts
Control Resolution .....Current: 10 Amps
Voltage: 5 Volts

Dimensions and Weight:

Width.....11-1/2" (29 cm)
Height .....3" (7.6 cm)
Depth .....13-3/8" (34 cm)
Weight.....5 pounds-5 oz. (2.4 kg)

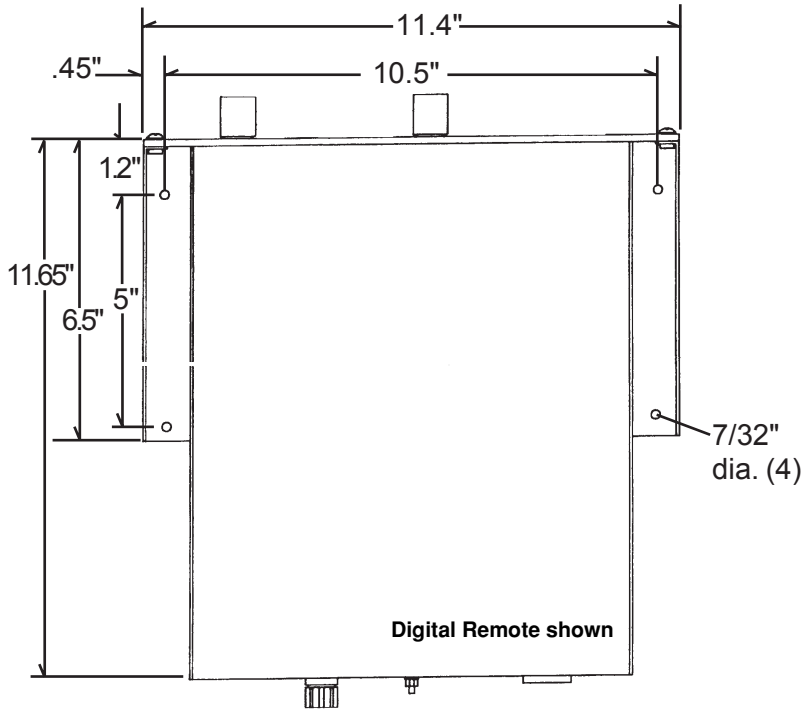

Figure 2-5 Mounting Dimensions – Remote V/C Modules

Programmable Remote (PR) V/C Control (#055004) – Optional

Controls .....None. Controlled through guidance machinery computer.

Control Range .....Current: 40 to 200 Amps
Voltage: 100 to 200 Volts

Control Resolution .....Current: 10 Amps
Voltage: 5 Volts

Dimensions and Weight:

Width .....11-1/2" (29 cm)
Height.....3" (7.6 cm)
Depth .....12-1/2" (31.8 cm)
Weight .....5 pounds-5 oz. (2.4 kg)

Initial Height Sensing (#028390) – Optional

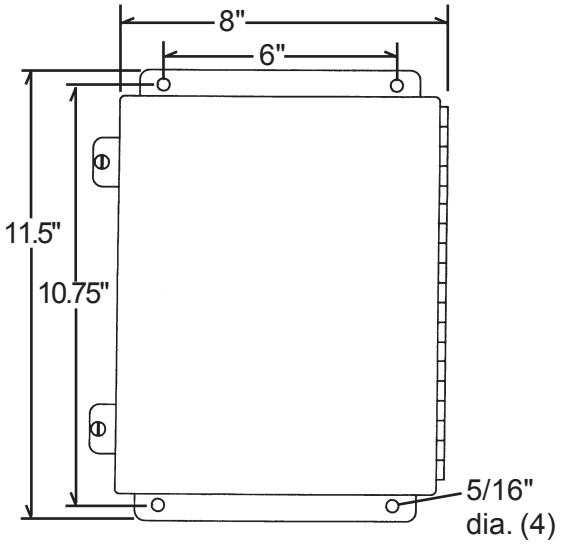

Figure 2-6 Mounting Dimensions – IHS Console

Input Power.....120 VAC from power supply
Air Pressure .....20 psi (1.4 bar) regulated shop air input to solenoid.

Dimensions and Weight:
Width.....9" (23 cm)
Height .....4.5" (11 cm)
Depth .....11-1/2" (29 cm)
Weight.....13 pounds (6 kg)

Timer/Counter (#073194) - Optional

Dimensions and Weight:
Width.....6-1/2" (16.5 cm)
Height .....2-1/2" (6.4 cm)
Depth .....8-5/8" (21.9 cm)
Weight.....3 pounds (1 kg)

Water Muffler – Optional

The water muffler can not be used with the stainless steel machine torch.

Refer to Water Muffler Instruction Manual (#802050).

Section 3

PRE-INSTALLATION

In this section:

Introduction 3-2
Gas Requirements 3-2
Air as Plasma Gas 3-2
Oxygen, Nitrogen, or Argon/Hydrogen as Plasma Gas 3-3
Shield Gas 3-3
Torch Coolant Requirements 3-4
Grounding Requirements 3-5
Power Requirements 3-5
Line Disconnect Switch 3-5
Power Cable 3-5
Positioning the Power Supply 3-6
Electrical Configurations 3-7
240/480V Linkboard Configurations 3-7
220/380/400/415V Transformer T1 and T2 Configurations 3-8
Connecting the Power 3-10
Torch Lifter Requirement 3-11
Optional Equipment 3-11
Water Muffler 3-11
Initial Height Sensing (IHS) 3-12

Introduction

Prior to the installation of the HT2000 plasma cutting system, the following requirements must be fulfilled. Please read these requirements carefully. Their purpose is to aid you in the installation of your plasma cutting system and to allow maximum performance.

Installation and service of the electrical and plumbing systems must conform to national or local electrical and plumbing codes. This work should be performed only by qualified, licensed personnel.

Note: Before positioning the power supplies, see Upon Receipt in the Installation section (Section 4) of this manual.

If questions arise at any time, call Technical Service listed in the front of this manual or your authorized Hypertherm distributor.

Gas Requirements

The regulated source gas supplies are provided **by the customer.** Refer to **Section 2** for specifications.

Caution: Gas supply pressures not within the parameters outlined in Section 2 can cause poor cut quality, poor consumable life, and operational problems.

Note: If the purity level of the gas is too low or if there are leaks in the supply hoses or connections, cut speeds can decrease, cut quality can deteriorate, cutting thickness capability can decrease, and parts life can shorten.

If making hard plumbing connections, avoid using iron pipe. Never use PTFE tape on any joint preparation. After installation, pressurize the entire system and check for leaks.

Air as Plasma Gas

Refer to **Section 2** for gas specifications.

Two different sources of air can be used to supply the plasma gas requirements of the system: cylinder compressed air or shop compressed air.

From Cylinder Compressed Air or Shop Air to Gas Console

Use an inert gas hose to connect the air supply to the input connection on the gas console. Hosing can be purchased through Hypertherm.

When using air as the plasma <u>or</u> shield gas, Hypertherm recommends a three-stage filtration system. See Appendix section for suggested filtration.

Oxygen, Nitrogen, or Argon-Hydrogen as Plasma Gas

From Source Supply to Gas Console

Refer to **Section 2** for gas specifications.

If **not** using hard plumbing to supply plasma gas to the gas console, we recommend using standard oxygen hose with the system.

Note: If cutting with oxygen as the plasma gas, nitrogen must also be connected to the gas console to achieve the proper oxygen/nitrogen mixtures in the preflow and cut flow conditions.

From Gas Console to Motor Valve Console

Hose from the gas console to the motor valve console is provided by Hypertherm.

WARNING

Cutting with oxygen as the plasma gas can cause a potential fire hazard due to the oxygen-enriched atmosphere that it creates. As a precaution, Hypertherm recommends that an exhaust ventilation system be installed if you will be cutting with oxygen.

Shield Gas

From Source Supply to Gas Console

Refer to **Section 2** for gas specifications.

If **not** using hard plumbing, use 3/8-inch I.D. hose with the system. Hose can also be purchased through Hypertherm.

From Gas Console to RHF Console

Hosing from the gas console to the RHF console is provided by Hypertherm.

Torch Coolant Requirements

The power supply is shipped to the customer without any coolant in the tank. Hypertherm recommends a mixture of 30% propylene glycol, 69.9% deionized water, and .1% benzotriazole. This mixture resists freezing to +10° F (-12° C) and contains a corrosion inhibitor (benzotriazole) to protect copper surfaces in the coolant loop. This mixture is available in one-gallon containers by ordering 028872. 100% propylene glycol is available by ordering 028873.

Caution: For operating temperatures colder than the temperature stated above, the percentage of propylene glycol must be increased. Failure to do so could result in a cracked torch head, hoses, or other damage to the torch coolant system due to the torch coolant freezing.

See Figure b-1 chart in **Appendix B** to determine if a stronger propylene glycol/purified water solution is needed for your particular application.

Observe the warning and cautions below. Refer to the Material Safety Data Sheets in Appendix B for data on safety, handling, and storage of propylene glycol and benzotriazole.

WARNING

Propylene glycol and benzotriazole are irritating to skin and eyes, and harmful or fatal if swallowed. Upon contact, flush skin or eyes with water. If swallowed, drink water and call a physician immediately. Do not induce vomiting.

Caution: Always use propylene glycol in the coolant mixture. Do not use anti-freeze in place of propylene glycol. Antifreeze contains corrosion inhibitors that will damage the torch coolant system.

Caution: Always use purified water in the coolant mixture in order to prevent corrosion in the torch coolant system. The hardness of the purified water should be between .206 and 8.5 ppm. If using a conductivity meter to measure water purity, the recommended level is between 0.5 and 18 µSiemens/cm at 77° F (25° C).

Grounding Requirements

Proper grounding is essential for reasons of personal safety and to prevent emission of high frequency interference. See Appendix F for system grounding requirements.

Connect the worktable to a high-quality earth ground from 3 feet to 20 feet of the table. A suitable ground consists of a solid copper rod of at least 1/2-inch diameter driven to a depth of at least 8 feet into the earth below the permanent moisture level. For additional information consult the National Electric Code, Article 250, Section H *Grounding Electrode System*, or other appropriate code.

Power Requirements

All switches, slow-blow fuses and power cables are customer supplied and must be chosen as outlined by applicable national and/or local electrical codes. Installation must be performed by qualified personnel.

Use a separate primary line disconnect switch for the power supply. Size the disconnect box to the following requirements:

Input Voltage	Phase	Rated Input Current @ 30 kw Output	Recommended Slow-Blow Fuse Size
200 VAC	3	108 amps	150 amps
208 VAC	3	104 amps	150 amps
220 VAC	3	98 amps	150 amps
240 VAC	3	90 amps	150 amps
380 VAC	3	57 amps	80 amps
400 VAC	3	56 amps	80 amps
415 VAC	3	52 amps	70 amps
440 VAC	3	49 amps	70 amps
480 VAC	3	45 amps	60 amps
600 VAC	3	36 amps	50 amps

Line Disconnect Switch

The line disconnect switch serves as the supply voltage disconnecting (isolating) device. Install this switch on a wall near the power supply for easy accessibility by the operator. **The line disconnect switch must be installed by qualified personnel following all applicable local and national codes. The switch should:**

- Isolate the electrical equipment and disconnect all live conductors from the supply voltage when in "OFF" position
- Have one "OFF" and one "ON" position clearly marked with "0" (OFF) and "1" (ON)
- Have an external operating handle capable of being locked in the "OFF" position
- Contain a power operated mechanism that serves as an emergency stop
- Have slow-blow fuses installed for the proper breaking capacity (see table above)

Power Cable

Power Source to Power Supply

Wire sizes vary based on the distance of the receptacle from the main box. The wire sizes listed on the following page were taken from the National Electric Code 1990 handbook, table 310.16. **Use a 4-conductor**

Type SO input power cable with a conductor temperature rating of 140°F (60°C) according to the following requirements:

Input Voltage	Cable Size (AWG)	Current Rating
200 VAC	1	107 amps
208 VAC	1	107 amps
220 VAC	1	107 amps
240 VAC	1	107 amps
380 VAC	4	69 amps
400 VAC	4	69 amps
415 VAC	4	69 amps
440 VAC	6	52 amps
480 VAC	6	52 amps
600 VAC	8	39 amps

Positioning the Power Supply

WARNING

Remove all electrical connections to power supply before moving or positioning. Transporting unit can cause personal injury and equipment damage.

Positioning the Power Supply

Prior to making electrical connections to the power supply, position the supply as follows:

Note: A lifting eye is provided for moving the power supply into place with a crane or hoist. It may also be moved by forklift if the forks are long enough to extend the entire length of the base. Care should be used when lifting with the forks so that the underside of the power supply is not damaged.

1. Place the power supply in an area that is free of excessive moisture, has proper ventilation, and is relatively clean. Allow room for accessing the sides of the power supply for servicing.

2. Place the power supply so that air flow is not blocked in any way. (Cooling air is drawn in through the front panel grating, and is exhausted through the rear of the unit by a cooling fan.)

3. Do not place any filter device over the air intake locations. This reduces cooling efficiency and VOIDS THE WARRANTY.

4. After placement of the power supply, the line disconnect switch box can be placed close to the power supply for safety purposes.

Electrical Configurations

Prior to connecting the power cable, ensure that the 240 / 480V power supply is configured to the required input line voltage as described below. If for any reason the voltage must be re-configured after the power supply has been powered up, observe the following warning:

WARNING

Danger: High Voltage. Line voltage is present in the power supply unless disconnected. Always disconnect input power at the line disconnect switch before servicing.

240/480V Linkboard Configurations

- The 240/480-volt units are shipped from the factory linked for 480-volt operation. The links must be moved for 240-volt operation. Ensure that the linkboard is configured properly to the appropriate voltage line (see Figure 3-1).

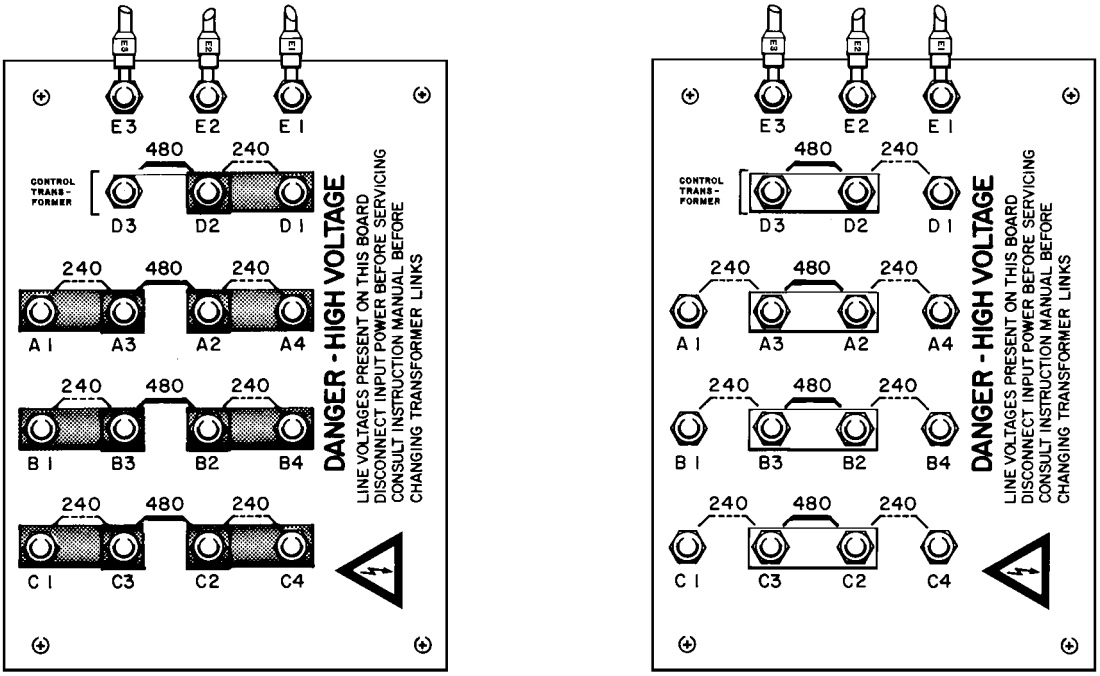

Figure 3-1 Dual Voltage 240/480-Volt Linkboard Configurations

220/380/400/415V Transformer T1 and T2 Configurations

- The 220/380/400/415-volt, 3PH, 50 Hz power supply is normally shipped from the factory set up for 380-volt operation, unless otherwise specified. To change the power supply to a different voltage, the control transformer T1 and 30 kw transformer T2 must be re-configured (see Figure 3-2).

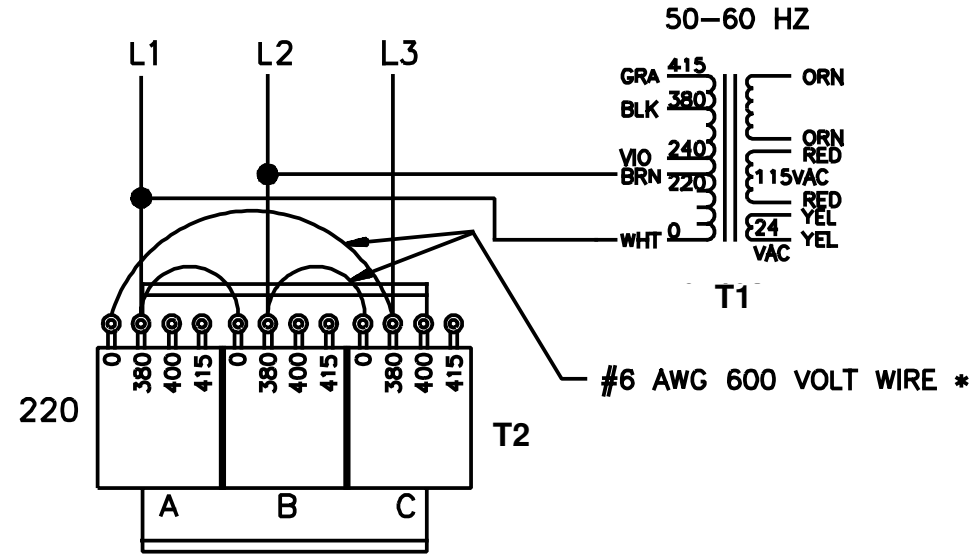

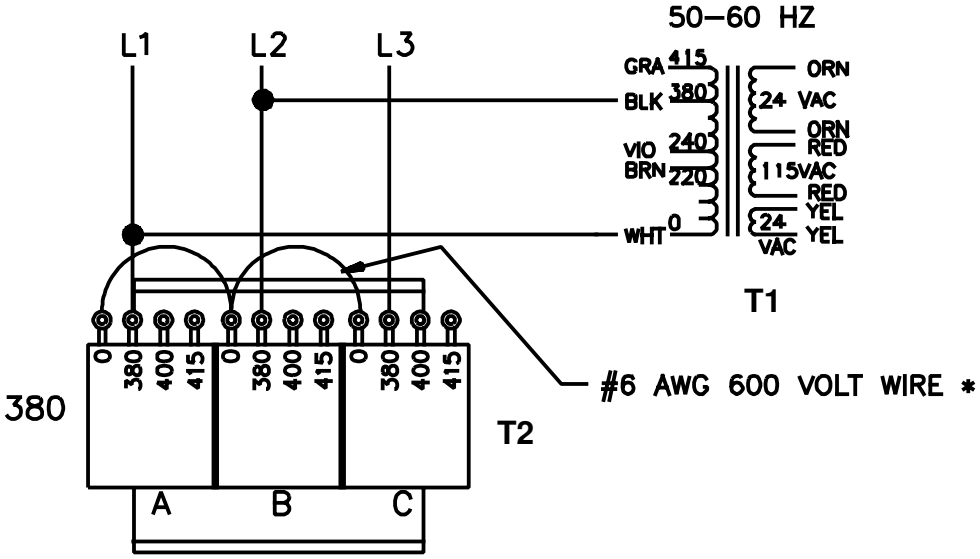

* A long #6 AWG 600V wire is shipped with every unit.

Figure 3-2 220/380/400/415V Transformer T1 and T2 Configurations – 1 of 2

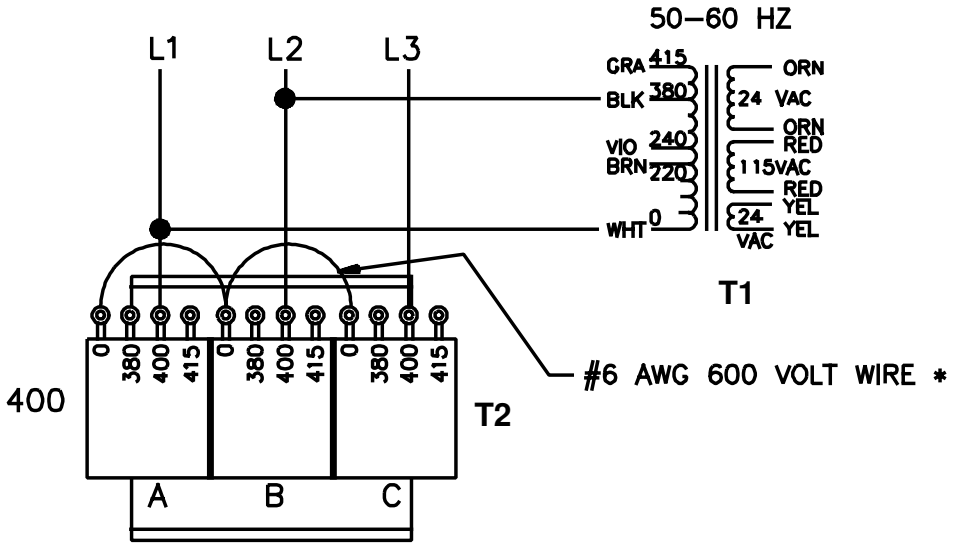

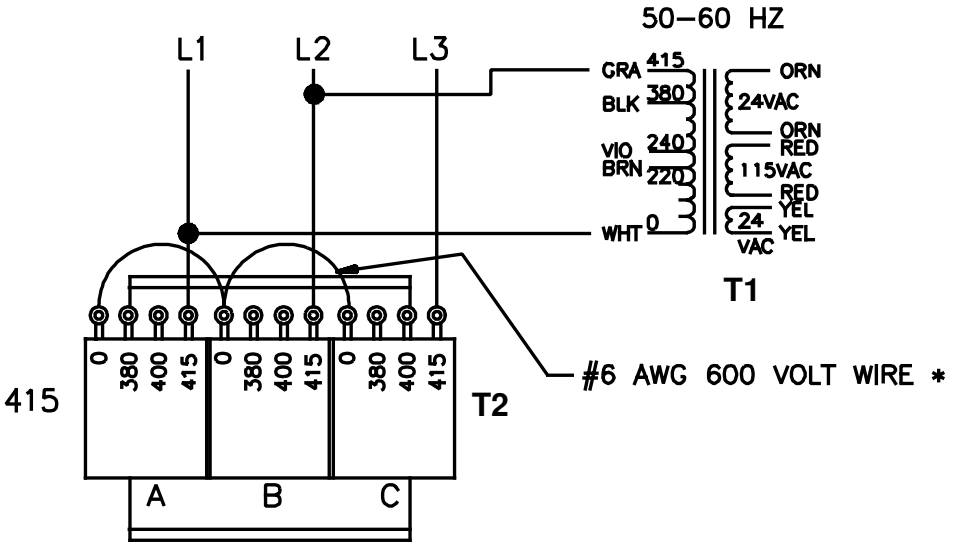

Figure 3-2 220/380/400/415V Transformer T1 and T2 Configurations – 2 of 2

Connecting the Power

WARNING

The line disconnect switch must be in the OFF position before making the power cable connections! In the U.S., use a "lock-out/tag-out" procedure until installation is complete. In other countries, follow appropriate local or national safety procedures.

Power Cable to Power Supply

To connect the power cable to the 400V CE power supplies (073198 and 073199), refer to Appendix E. For all other power supplies, use the procedure below.

1. Insert the power cable through the strain relief at the lower left rear of the power supply. Connect the power cable leads to **TB1** at the rear center panel of the right side.
2. Connect the power leads to the **L1**, **L2**, and **L3** terminals of **TB1.** See Fig. 3-3.
3. Connect the ground lead to the stud as shown.

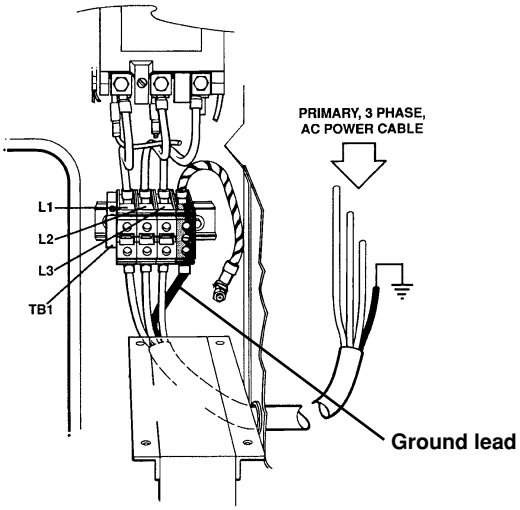

Figure 3-3 Power Cable Connections

WARNING

There is line voltage at the contactor if the line disconnect switch is in the ON position, even if the ON (1) pushbutton on the power supply has not been pressed. As a common safety practice, ALWAYS verify that the line disconnect switch is in the OFF position before installing, disconnecting or servicing in this area.

Power Cable from Power Supply to Power Source.

1. **Be certain that the line disconnect switch is in the OFF position.**

2. Connect the power cord leads to the line disconnect switch following local and applicable electrical codes.

	WARNING
The line disconnect switch must remain in the OFF position during the rest of the pre-installation and installation of the system!	

Torch Lifter Requirement

The system requires a high-quality, motorized torch lifter with sufficient travel to cover all cutting thickness requirements. A lifter which provides **10 inches (254 mm) of vertical travel** should be adequate. The unit should have a constant speed of at least **20 ipm (508 mm/min)** and braking should be positive. A unit which drifts through the stop point is not acceptable.

Optional Equipment

Water Muffler

The water table provides the supply of water to the Water Muffler pump. It is **mandatory** that this water be filtered. A strainer filter, Hypertherm 027009, is provided with all Water Muffler systems.

Plumbing Requirements

Four feet of **3/4 inch** I.D. **#12** hosing is required to attach the filter to the pump. It is important that the pump be placed as close as possible to the water table. Longer distances result in pump priming problems, as well as water lag problems during start up. This results in excessive noise and smoke during the initial starting.

Water pump and water hosing can be purchased by the customer, or supplied by Hypertherm when ordering a Water Muffler system. Please refer to Water Muffler System part numbers listed below, and Water Muffler instruction manual 802050 for further information.

Power Requirements

A power cable for the Water Muffler pump must be provided by the customer. The pumps provided by Hypertherm take a three-phase input. Part numbers and corresponding voltages are listed below. Input current information is provided on the motor data plate. Present pump systems all draw less than 20 amps and cable sizes should be selected accordingly.

Water Muffler System Part Number	Water Pump Part Number	Input Voltage
034096 (w/hoses)	028042	240-480 Volt/60 Hz
034100 (w/hoses)	028299	380-415 Volt/50 Hz
034098 (w/hoses)	028308	600 Volts/60 Hz
034097 (wo/hoses)	028042	240-480 Volt/60 Hz
034101 (wo/hoses)	028299	380-415 Volt/50 Hz
034099 (wo/hoses)	028308	600 Volts/60 Hz

Initial Height Sensing (IHS)

The customer must provide the Initial Height Sensing system a source of compressed air to activate the inductive probes positioning rod.

Air Requirements

Use a clean, dry source of air to prevent possible problems created by moisture and water in the line.

A regulator is required to reduce shop air pressure to **20 psi (1.4 bar)**.

A **1/4 inch** I.D. hose is required between the regulator and the inductive height control module.

In addition to the above requirements for the IHS system, an upper-limit switch and cable may be desirable. Please refer to *Initial Height Sensing Connections* in the **Installation** section of this manual for further information.

Section 4

INSTALLATION

In this section:

Upon Receipt 4-2
Claims 4-2
Module Grounding and Grounding Checks 4-3
Noise Levels 4-3
System Units Placement....4-4
Power Supply Connections....4-6
Initial Height Sensing (IHS) Connections....4-20
Gas Console Connections 4-24
RHF and Motor Valve Consoles to Torch Connections....4-28
Routing the Torch Leads 4-28
Connecting the HF Torch Leads to the RHF Console 4-28
Connecting the HF Torch Leads to the Torch 4-30
Connecting the Off-Valve Cable and Plasma Hose from the Torch to the Motor Valve Console 4-30
Optional Power Supply Connections 4-32
Timer/Counter to Power Supply 4-32
Hold Cable Connections (When using Multi-Torch Systems)....4-32
Argon-Hydrogen Connections....4-34
Mounting the Machine Torch....4-34
Torch Alignment....4-34

Upon Receipt

The system is shipped mounted on skid(s) and protected by heavy carton covers. Before unpacking, inspect the cartons for evidence of damage during shipment. If there is evidence of damage, refer to *Claims for Damage During Shipment* for details.

1. Remove the units and items from the shipping cartons.

2. Verify that the components of the system, optional units, cables and hoses, and items listed below are included.

   Alert your distributor or Hypertherm if any of the items are damaged or missing. All communications regarding this equipment must include the model number and serial number (located on the back of the power supply). Refer to *Claims for Defective or Missing Merchandise* for details.

System Components
- Power Supply
- Remote High Frequency (RHF) Console
- Gas Console
- Motor Valve Console
- Cables
- Cooling hoses
- Valve/Torch Cable/Hose SA (to Motor Valve Console)
- Shielded torch lead set (to RHF Console)
- Machine torch
- Consumable spare parts kit

Optional Units
- Remote Voltage/Current (V/C) Control
  Digital Remote
  or
  Programmable Remote
- Argon-Hydrogen Manifold
- Initial Height Sensing (IHS)
- Water Muffler
- Timer/Counter

Claims

Claims for Damage During Shipment
If your unit was damaged during shipment, you must file a claim with the carrier. Hypertherm will furnish you with a copy of the bill of lading upon request. If you need additional assistance, call our Customer Service department at 1-800-643-0030 or Field Service at 1-800-643-9878.

Claims for Defective or Missing Merchandise
All units shipped from Hypertherm undergo rigorous quality control inspections for defects. If any of the merchandise is defective or missing, call your distributor. He will be able to help you. If you need additional assistance, call our Customer Service department at 1-800-643-0030 or Field Service at 1-800-643-9878.

Module Grounding and Grounding Checks

Please refer to *Grounding Requirements* in the **Pre-Installation** section of this manual for earth ground specifications.

See Appendix F for system grounding requirements.

Before operating the system, perform the following grounding checks to ensure proper operation, personal safety, and to reduce emission of radio-frequency interference:

- Ensure the power cord ground wire is properly connected to the ground in the line disconnect box.
- Ensure the power cord ground wire is properly connected to the power supply terminal **TB1**. Refer to *Connecting the Power* in the **Pre-Installation** section of this manual.
- Ensure that all electrical connections are tight to avoid excessive heating.

Noise Levels

Figure 4-1 represents the noise levels in decibels experienced by an operator standing 10 feet from the torch in a confined area under varied conditions while cutting 1-inch steel using oxygen/air at a travel speed of 20 ipm (508 mm/min).

Above water 6" without Water Muffler	106 dbs
Above water 6" with Water Muffler	104 dbs
Water at bottom of plate without Water Muffler	100 dbs
Water at bottom of plate with Water Muffler	95 dbs
Water 3" over plate without Water Muffler	75 dbs
Water 3" over plate with Water Muffler	72 dbs

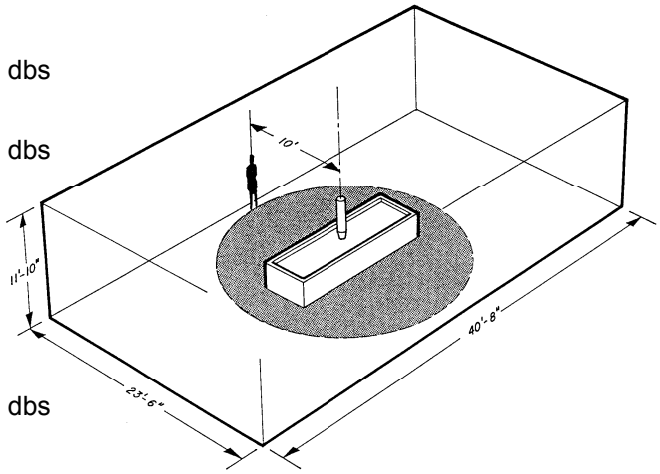

Figure 4-1 Noise Levels (Decibels)

System Units Placement

- **Ground all external modules in the system to earth. See Appendix F.**
- Position all required units prior to making electrical, gas, and interface connections.
- Note that the motor valve console must be located within 10 ft (3 m) of the torch, and the IHS console must be located within 40 ft (12 m) of the torch.
- To prevent leaks in the system, tighten all gas and water connections to the following specifications:

Gas or water hose size	Torque Specification		
	lbf-in	lbf-ft	kgf-cm
up to 3/8" (10mm)	75-85	6.25-7	86-98
1/2" (12 mm)	360-480	30-40	415-550

Use 2 wrenches when tightening to prevent damage to the mating component.

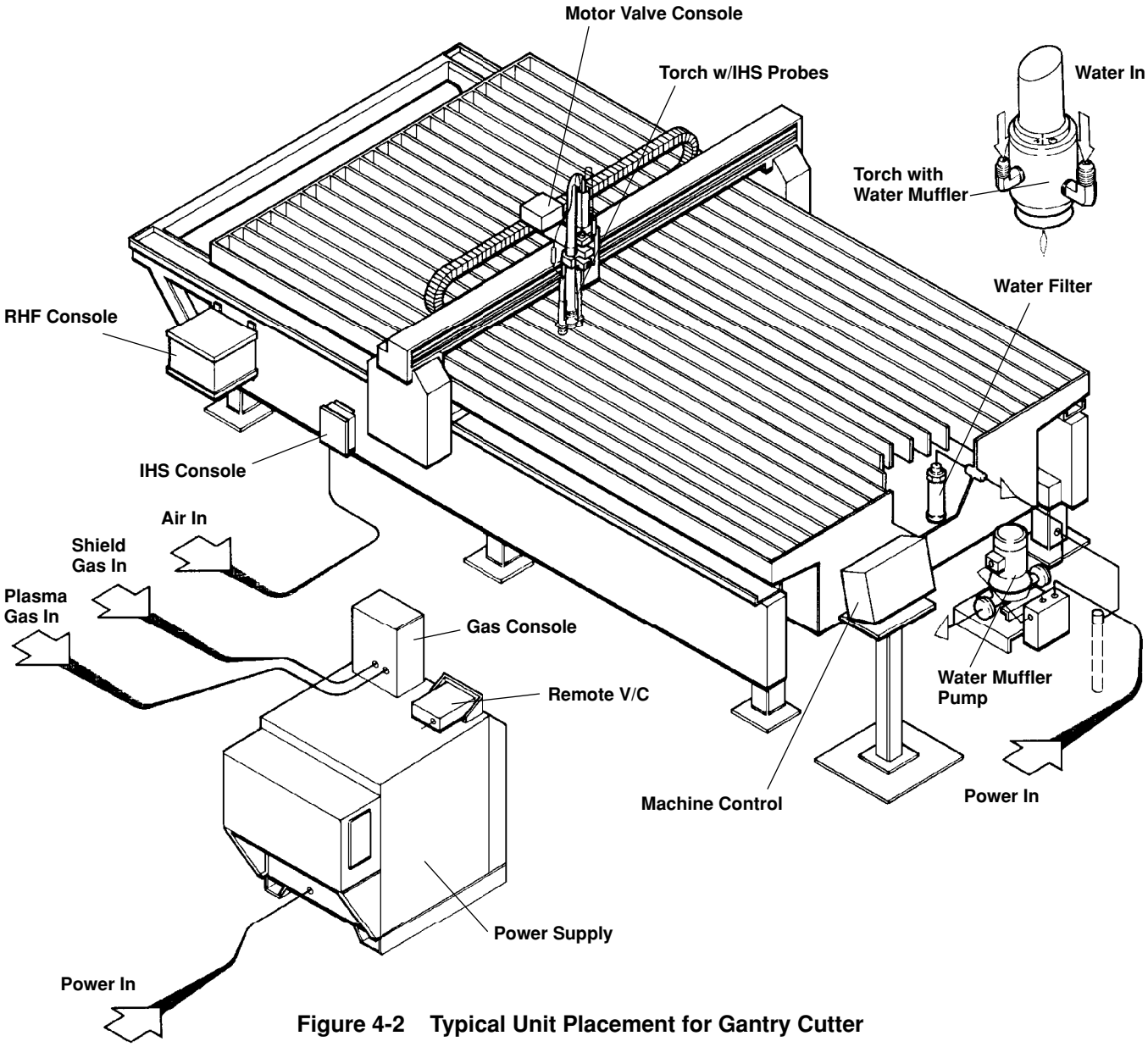

Figure 4-2 Typical Unit Placement for Gantry Cutter

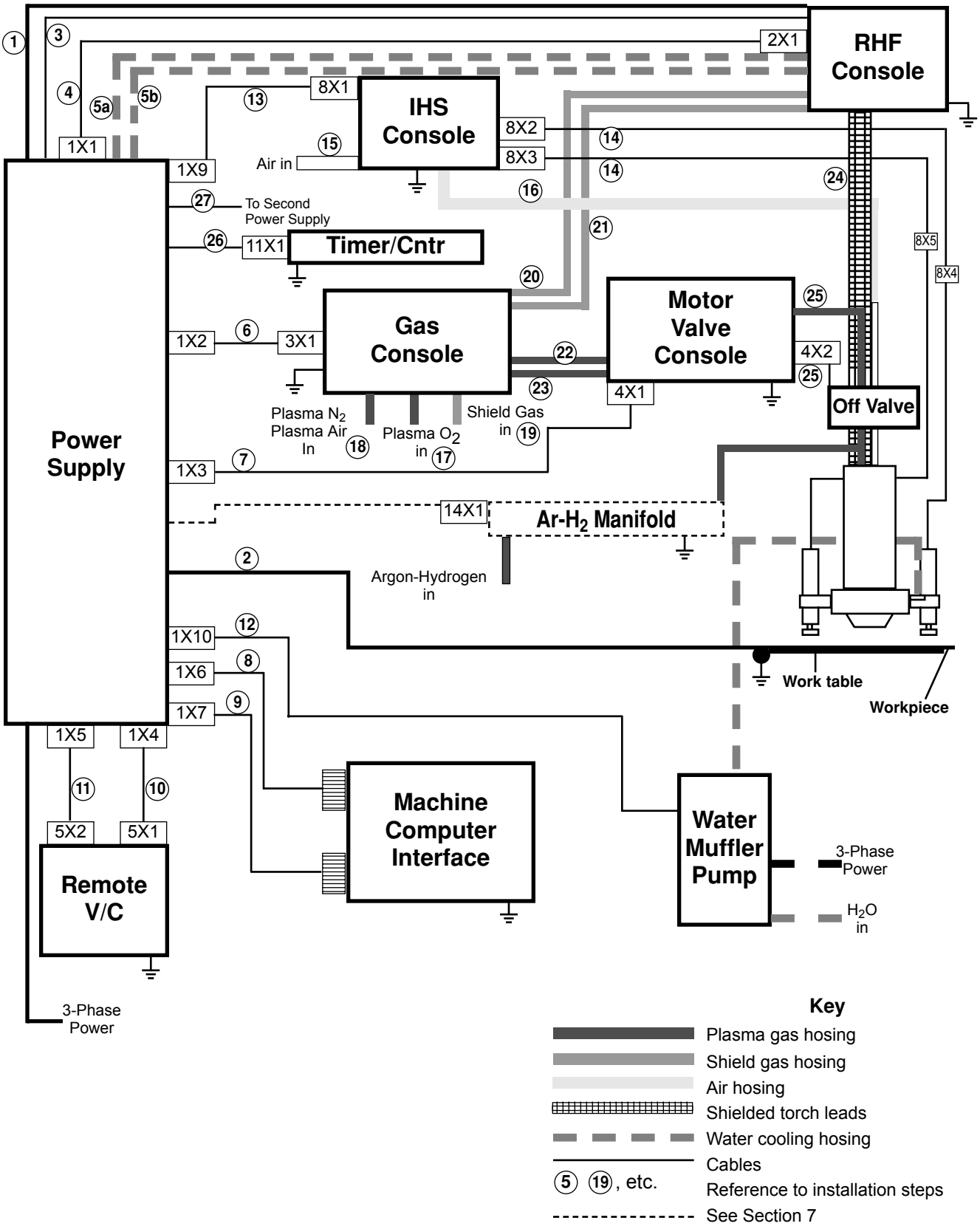

Figure 4-3 HT2000 Interconnect System Diagram with IHS and Water Muffler

Power Supply Connections

Match numbers in figures on right-hand pages with numbers of cables and hoses on left-hand pages to make connections. Any special instructions for installation are explained on the left-hand page.

The cable and hose part numbers on these pages represent the most commonly used lengths. For additional lenghts, see **Section 9** or call Hypertherm.

	WARNING
All power must be turned OFF before performing installation!!	

1 ***Negative Lead – Power Supply (PS) to RHF Console***

2 ***Positive Lead – PS to Work Table***

Part No.	Length	Part No.	Length
023403	15 ft (4.6 m)	023407	100 ft (30.5 m)
023404	25 ft (7.6 m)	023408	150 ft (46 m)
023405	50 ft (15 m)	023644	200 ft (62 m)
023406	75 ft (23 m)		

3 ***Pilot Arc lead – PS to RHF Console***

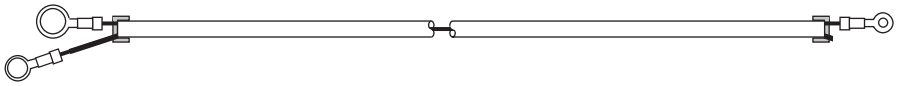

Part No.	Length	Part No.	Length
023631	25 ft (7.6 m)	023634	100 ft (30.5 m)
023632	50 ft (15 m)	023635	150 ft (46 m)
023633	75 ft (23 m)	023652	200 ft (62 m)

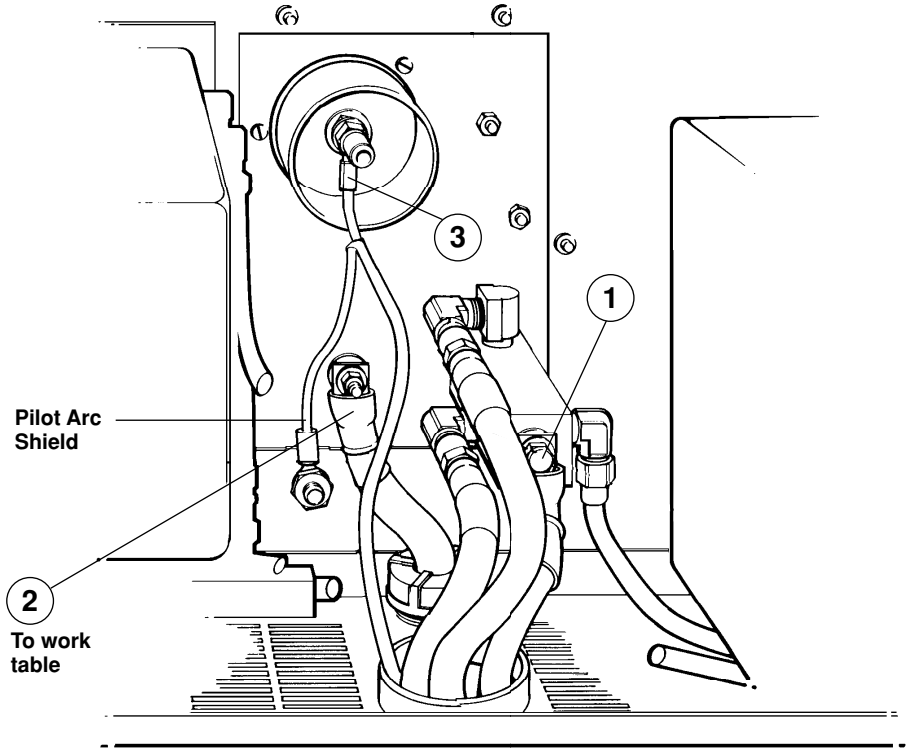

Power Supply Connections– Rear

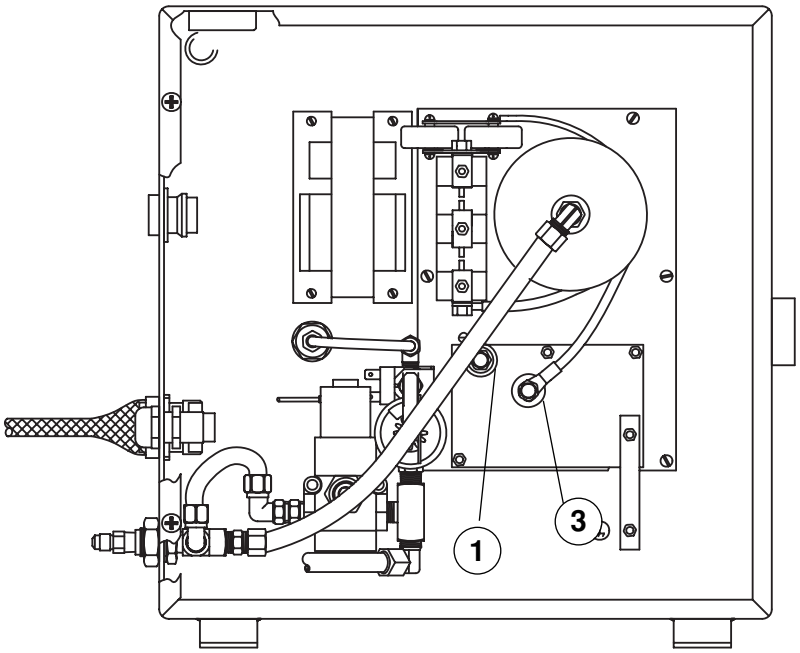

RHF Console

Figure 4-4 Power Supply Connections to RHF Console and Work Table

4 *RHF Cable – PS to RHF Console*

Connect the end of the cable marked 1X1 to the receptacle on the rear of the power supply labeled RHF 1X1 (Fig. 4-6). Connect the 2X1 end to the RHF Console as shown in Fig. 4-5

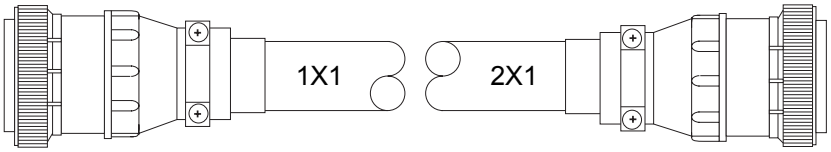

From 1X1	To 2X1	Color	Signal
34	1	Black	RHF Door Intrlck
35	4	Red	RHF Door Intrlck
36	3	Shld	Shield
4	2	Black	PS3 / Shield Gas
8	5	White	PS3 / Shield Gas
9	6	Shld	Cable Shield
23	7	Black	SV6 / Shield ON
24	8	Green	SV6 / Shield ON
25	11	Shld	Shield
10	10	Black	SV7 / Cap OFF
11	13	Blue	SV7 / Cap OFF
12	14	Shld	Shield
1	12	Black	T1 / HV Xfrmer
2	15	Yellow	T1 / HV Xfrmer
3	16	Shld	Shield

Part No.	Length
023550	**15 ft (4.6 m)**
023610	**25 ft (7.6 m)**
023611	**50 ft (15 m)**
023612	**75 ft (23 m)**
023613	**100 ft (30.5 m)**
023614	**150 ft (46 m)**
023645	**200 ft (62 m)**

5 *Cooling Hoses – PS to RHF Console*

5a

5b

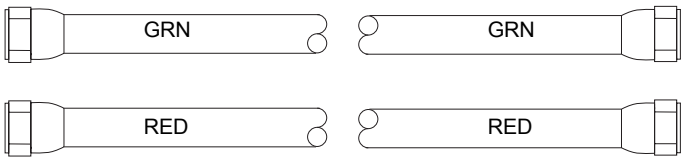

Part No.	Length	Part No.	Length
028652	**10 ft (3 m)**	**028443**	**75 ft (23 m)**
028440	**15 ft (4.6 m)**	**028444**	**100 ft (30 m)**
028653	**20 ft (6 m)**	**028445**	**150 ft (46 m)**
028441	**25 ft (7.6 m)**	**028637**	**200 ft (61 m)**
028442	**50 ft (15 m)**		

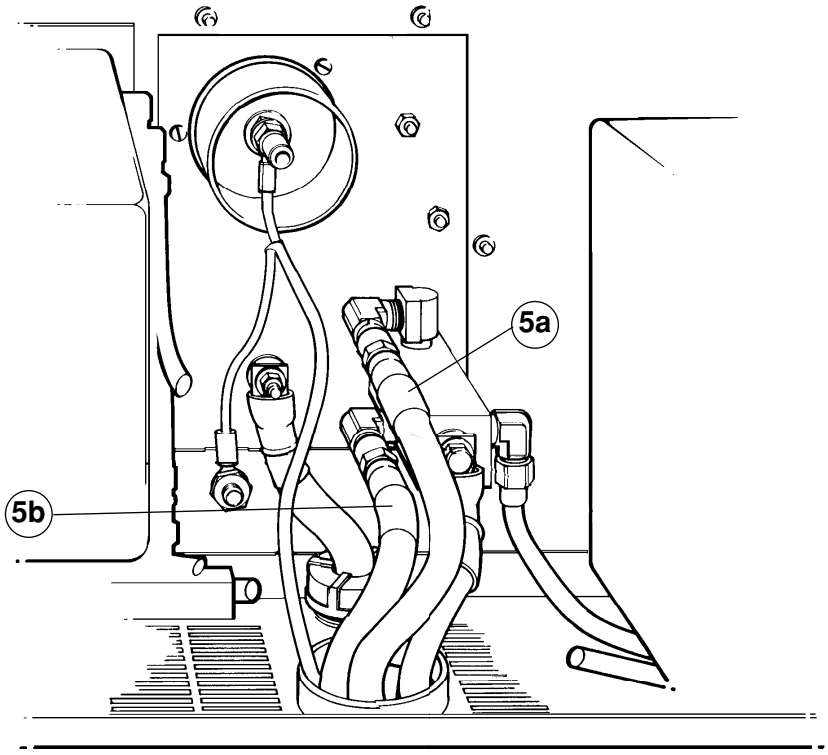

Power Supply – Rear

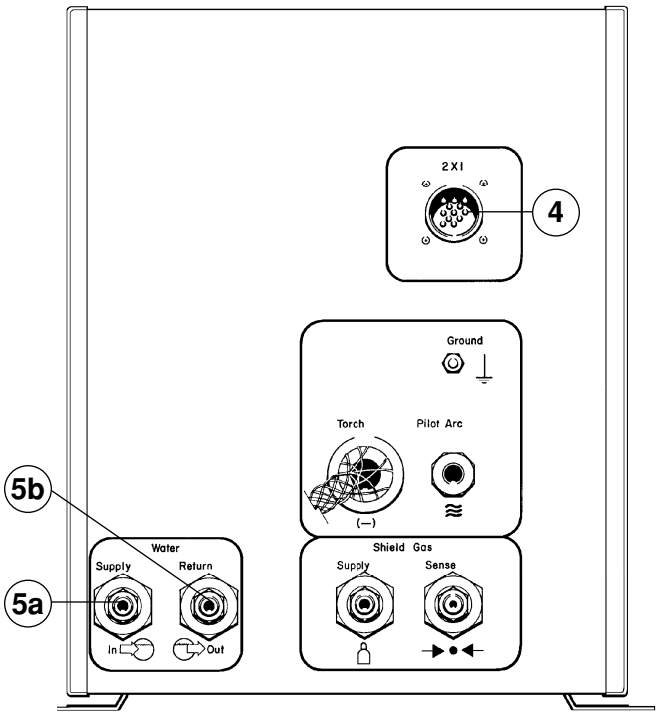

RHF Console – Rear

Figure 4-5 Power Supply Connections to RHF Console

6 *Gas Console Cable – PS to Gas Console*

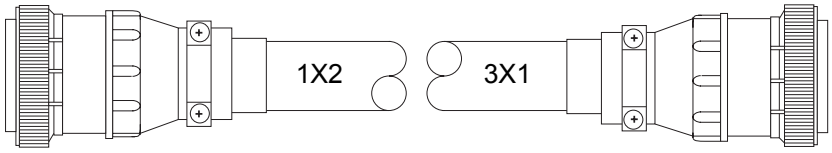

From 1X2	To 3X1	Color	Signal
29	29	Black	S3 / MV2 Increase
30	30	Red	Spare
34	34	Shld	Shield
5	5	Black	S3 / MV2 Decrease
6	6	White	S3 / MV2 Common
1	1	Shld	Shield
2	2	Black	LT1 / DC ON
3	3	Green	LT1 / DC ON
7	7	Shld	Shield
8	8	Black	SV1B / O2 / N2
9	9	Blue	SV1B / O2 / N2
4	4	Shld	Shield
27	27	Red	SV1A / O2 / N2
28	28	Brown	SV1A / O2 / N2
22	22	Shld	Shield
16	16	Black	SV2 / O2 / N2
17	17	Yellow	SV2 / O2 / N2
10	10	Shld	Shield
11	11	Black	SV3 / Preflow Trap
12	12	Brown	SV3 / Preflow Trap
18	18	Shld	Shield
19	19	Black	S1 / N2 / O2
20	20	Orange	S1 / N2 / O2
13	13	Shld	Shield
14	14	Red	S2 / Test / Preflow
15	15	White	S2 / Test / Common
21	21	Shld	Shield
35	35	Red	S2 / Test / Operate
36	36	Green	S2 / Test / Common
31	31	Shld	Shield
32	32	Red	PS1&PS2
33	33	Blue	PS1&PS2
37	37	Shld	Shield

Part No.	Length
023549	**15 ft (4.5 m)**
023605	**25 ft (7.5 m)**
023757	**38 ft (11.5 m)**
023606	**50 ft (15 m)**
023607	**75 ft (23 m)**
023608	**100 ft (30.5 m)**
023743	**125 ft (38 m)**
023609	**150 ft (46 m)**

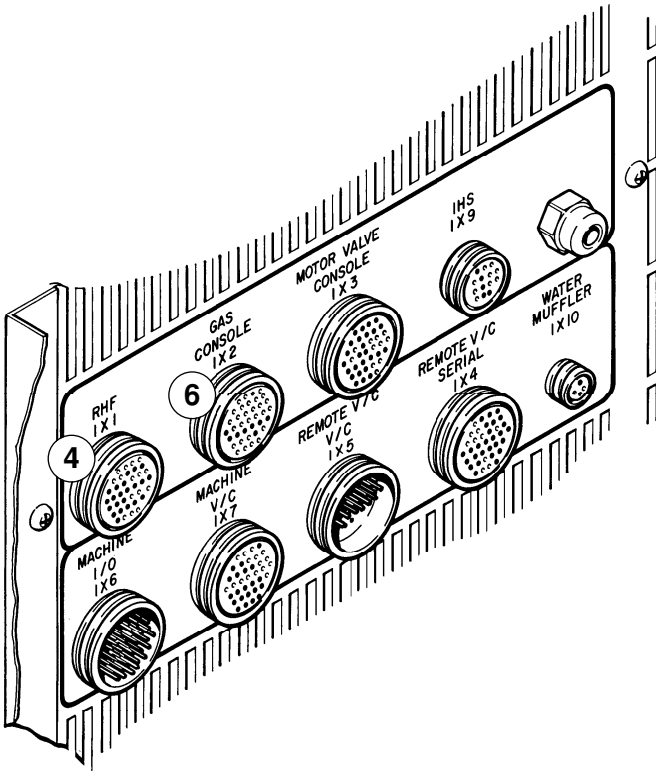

Power Supply – Rear

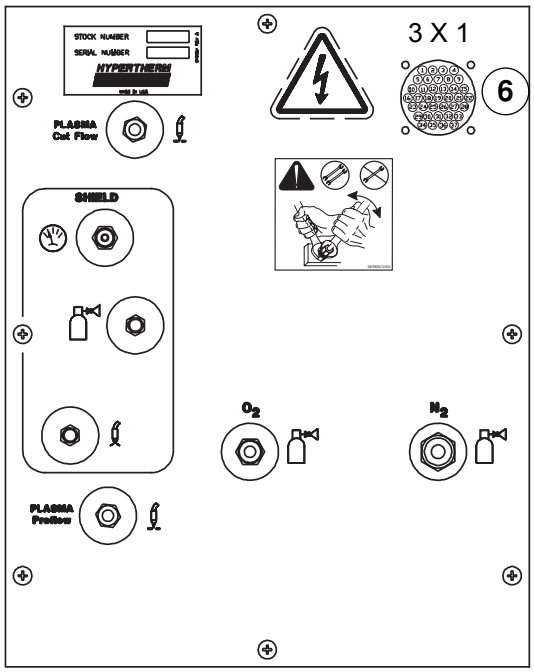

Gas Console

Figure 4-6 Power Supply Connection to Gas Console

7 *Motor Valve Console Cable – PS to Motor Valve Console*

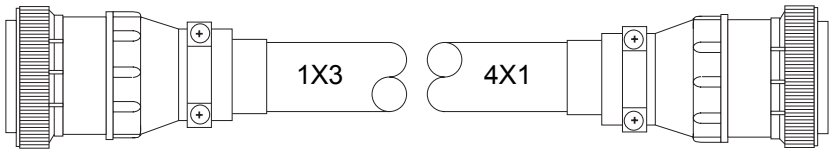

From 1X3	To 4X1	Color	Signal
16	16	Black	SV4A/ Cutflow
17	17	Yellow	SV4A/ Cutflow
10	10	Shld	Shield
23	23	Red	SV4B/ Preflow
24	24	Yellow	SV4B/ Preflow
25	25	Shld	Shield
29	29	Black	SV5 / Plasma OFF
30	30	Red	SV5 / Plasma OFF
34	34	Shld	Shield
11	11	Black	MV2 Decrease
12	12	Brown	MV2 Decrease
18	18	Shld	Shield
14	14	Brown	MV2 Motor Increase
21	21	Shld	Shield

Part No.	Length
023551	**15 ft (4.5 m)**
023590	**25 ft (7.6 m)**
023776	**35 ft (10.5 m)**
023591	**50 ft (15 m)**
023592	**75 ft (23 m)**
023593	**100 ft (30.5 m)**
023594	**150 ft (46 m)**
023658	**200 ft (61 m)**

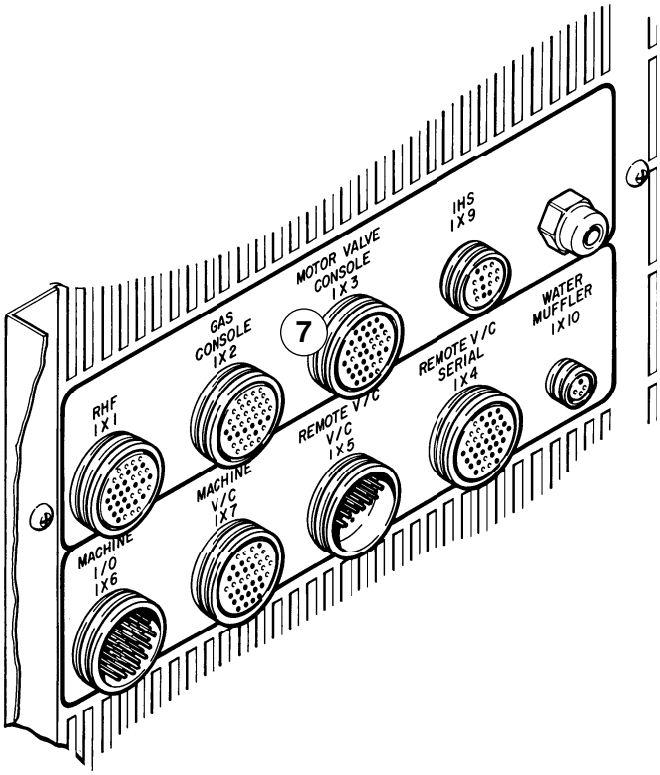

Power Supply – Rear

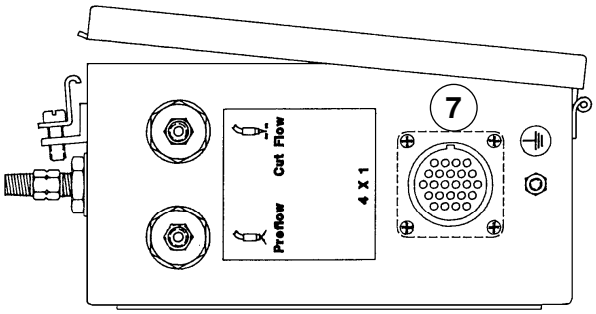

Motor Valve Console

Figure 4-7 Power Supply Connection to Motor Valve Console

8 *Machine I/O Interface Cable – PS to Machine Interface*

Connect the plug end of the machine interface cable marked 1X6 to the receptacle on the rear of the power supply marked MACHINE I/O 1X6 (Fig. 4-10).

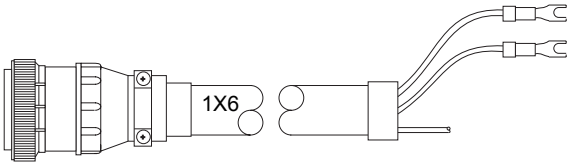

From 1X6	Color	Lug	Signal
2 6 11	Yellow Black Shld	2 6	Initial Height Sig. (OFF=Closed) Initial Height Com. Shield
4 8 13	Orange Black Shld	4 8	Auto Height Sig. (OFF=Closed) Auto Height Com. Shield
34 29 23	Red Black Shld	34 29	*†Lifter DOWN Load (DOWN=Closed) Lifter DOWN Line Shield
35 30 24	Green Black Shld	35 30	*†Lifter UP Load (UP=Closed) Lifter UP Line Shield
36 31 25	Red Blue Shld	36 31	Upper Limit Switch (OFF=Closed) Upper Limit Switch Shield
33 28 27	Red Yellow Shld	33 28	Arc Voltage (1/50 Arc Voltage) Arc Voltage Shield
9 15 14	Blue Black Shld	9 15	Plasma START (START=Closed) Plasma START Shield
37 32 26	Red Green Shld	37 32	*†Arc Transfer (TRANSFER=Closed) Arc Transfer Shield
1 5 10	White Black Shld	1 5	Hold Ignition Sig. (HOLD=Closed) Hold Ignition Com. Shield
3 7 12	Brown Black Shld	3 7	Remote Power OFF (OFF= Momentary Closed) Remote Power OFF Shield
21 22 20	White Red Shield	21 22	Remote Power ON (ON=Momentary Closed) Remote Power ON Shield

Part No.	Length
023841	**6 ft (2 m)**
023842	**15 ft (4.6 m)**
023843	**25 ft (7.6 m)**
023844	**35 ft (10.6 m)**
023845	**50 ft (15 m)**
023846	**75 ft (23 m)**
023847	**100 ft (30.5 m)**
023848	**125 ft (38 m)**
023849	**150 ft (46 m)**
023850	**200 ft (61 m)**

* Signals are AC relays. DC relays available as an option from Hypertherm by ordering kit:128404

†WARNING

When installing or servicing the HT2000, AC or DC line voltages may be present on the UP, DOWN and TRANSFER signals even if the power supply line disconnect switch is OFF. Make certain that <u>all</u> line disconnect switches relating to the HT2000 system are OFF during installation and when servicing.

Figure 4-8 Machine I/O Interface Cable – PS to Machine Computer Interface

9 *Machine V/C Interface Cable – PS to Machine Interface*

Note: If you are using a remote V/C to set voltage and current, skip this step.

Before connecting the machine V/C interface cable, see the wiring diagrams in this manual and verify that the correct plug is attached to the µP control PCB REC6 receptacle.

Connect the plug end of the machine interface cable marked 1X7 to the receptacle on the rear of the power supply marked MACHINE V/C 1X7 (Fig. 4-10).

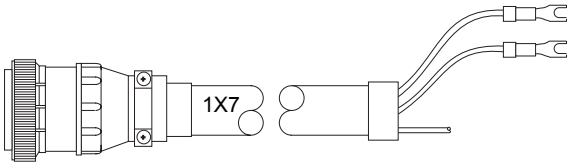

From 1X7	Color	Signal
2	White	Current 10
3	Red	Current 20
4	Green	Current 40
5	Orange	Current 80
6	Blue	Current 100
7	White/Black	Current 200
10	Shld	Shield
11	Blue/Black	Current ICom
12	Black/White	Spare
13	Red/White	Spare
16	Black/Red	Voltage V5
17	White/Red	Voltage V10
18	Orange/Red	Voltage V20
19	Blue/Red	Voltage V40
20	Red/Green	Voltage V80
21	Orange/Green	Voltage V100
22	Black/White/Red	Voltage V200
23	White/Black/Red	Voltage VCOM

Part No.	Length
023902	**6 ft (2 m)**
023851	**15 ft (4.6 m)**
023852	**25 ft (7.6 m)**
023853	**35 ft (10.6 m)**
023854	**50 ft (15 m)**
023855	**75 ft (23 m)**
023856	**100 ft (30.5 m)**
123650	**115 ft (35 m)**
023903	**125 ft (38 m)**
023857	**150 ft (46 m)**
023858	**200 ft (61 m)**

Figure 4-9 Machine V/C Interface Cable – PS to Machine Computer Interface

10 *Remote V/C cable – PS to Digital (DR)/Programmable (PR) V/C*

Note: If you are using a machine computer interface to set voltage and current and don't want the programmable V/C readout, skip this page.

PS End **Remote V/C End**

Legend–PS End		
Pin	Color	Function
4	Grn	SID Data
8	Blk	SID Common
9	Red	SOD Data
13		Shield-Grn/Blk
14		Shield-Red/Blk
15	Blk	SOD Common
31		Shield (AC PWR) Wht/Blk
35	Wht	AC Power
36	Blk	AC Power

Legend–Remote V/C End		
Socket	Color	Function
1	Grn	SID Data
2	Blk	SID Common
3	Red	SOD Data
5		Key
6	Blk	SOD Common
7	Wht	AC Power
8	Blk	AC Power

Part No.	Length	Part No.	Length
023911	**15 ft (4.5 m)**	**023883**	**150 ft (46 m)**
023878	**25 ft (7.6 m)**	**023884**	**200 ft (61 m)**
023879	**50 ft (15 m)**	**023885**	**250 ft (76 m)**
023880	**75 ft (23 m)**	**023886**	**275 ft (84 m)**
023881	**100 ft (30.5 m)**	**023887**	**300 ft (92 m)**
023882	**125 ft (38 m)**		

11 *Programmable Remote V/C Cable – PS to PR V/C*

Note: If you are using the digital remote to set voltage and current, skip this step.

PS End **PR V/C End**

PS End	PR V/C End	Color	Signal	PS End	PR V/C End	Color	Signal
1	1	Black	Current 20	8	8	White/Blue	Voltage 5
2	2	Blue	Current 40	9	9	Black/Blue	Voltage 10
3	3	Green	Current 80	10	10	Black/Green	Voltage 20
4	4	White	Current 100	11	11	Black/Orange	Voltage 40
5	5	Orange	Current 200	12	12	Black/Red	Voltage 80
7	7	White/Black	Common	13	13	White/Grey	Voltage 100
				14	14	White/Red	Voltage 200
				15	15	Black/White	Spare
				16	16	Shld	Shield

Part No.	Length	Part No.	Length
023834	**15 ft (4.5 m)**	**023839**	**150 ft (46 m)**
023835	**25 ft (7.6 m)**	**023840**	**200 ft (61 m)**
023836	**50 ft (15 m)**	**023899**	**250 ft (76 m)**
023837	**75 ft (23 m)**	**023900**	**275 ft (84 m)**
023838	**100 ft (30.5 m)**	**023901**	**300 ft (92 m)**
023898	**125 ft (38 m)**		

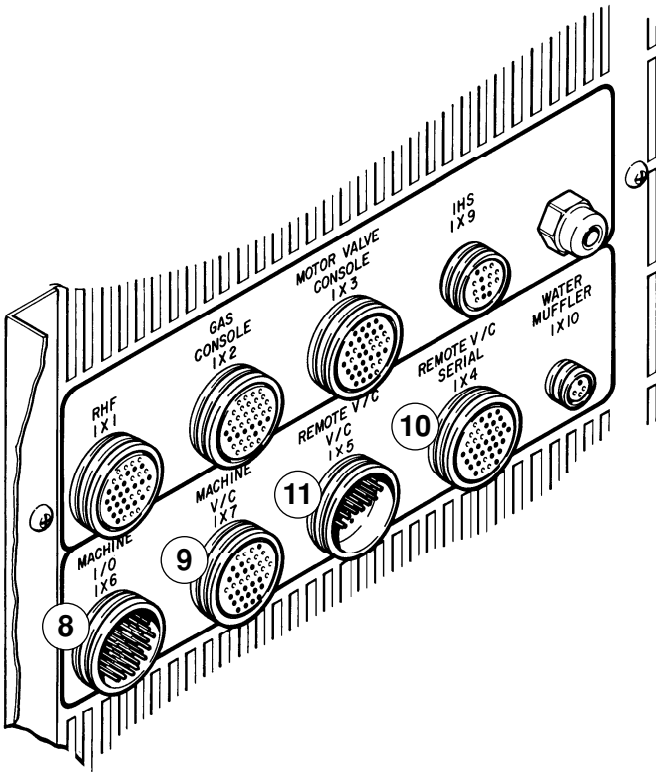

Power Supply – Rear

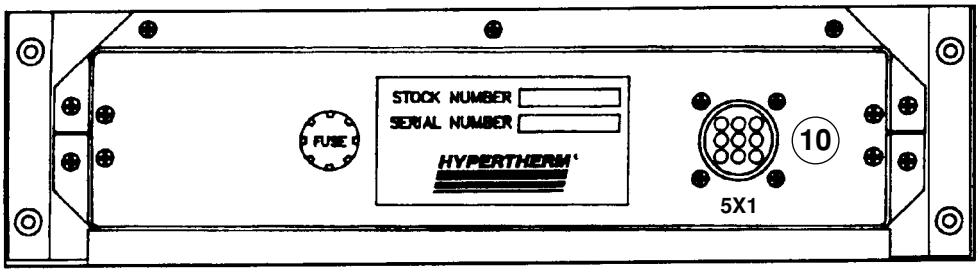

Digital Remote – Rear

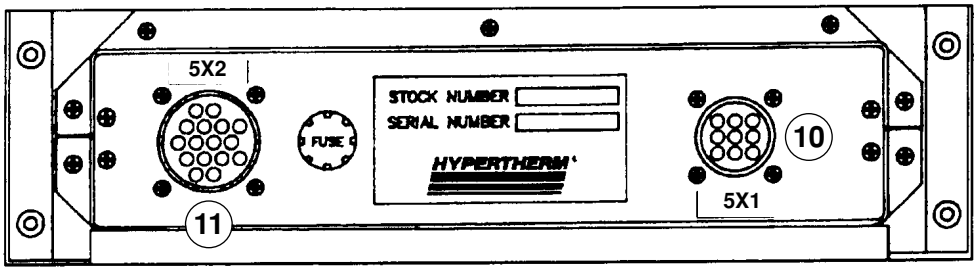

Programmable Remote – Rear

Figure 4-10 Power Supply Connections to Remote V/C Modules

12 *Water Muffler Pump Cable – Power supply to Water Muffler Pump*

See IM205 (802050) to connect cable to pump motor, and to make remaining water muffler connections. **The water muffler cannot be used with the stainless steel machine torch.**

PS End

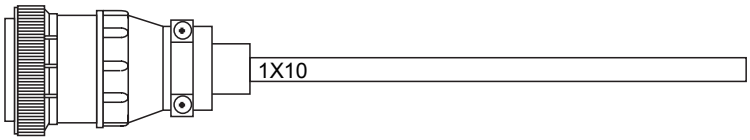

From 1X10 Pin	To WM Pump Contactor	Color	Function
2	Coil	Black	Water Muffler Coil
4	AC Neut.	White	AC Neutral
3	Ground	Green	Ground

Part No.	Length
023866	**50 ft (15 m)**
023867	**75 ft (23 m)**
023868	**100 ft (30.5 m)**

13 *IHS Interface cable – PS to IHS*

PS End **IHS End**

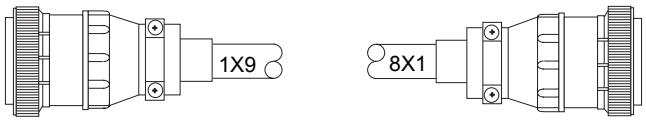

Legend–PS End		
Pin	Color	Function
1	Red	IHS Complete Sig.
2	Grn	Upper Limit Sw Sig
4	Blk	IHS Complete Com
5	Blk	Upper Limit Sw Com
8	Drain	Shield-Wht/Blk
9	Drain	Shield-Red/Blk
7	Drain	Shield-Grn./Blk
11	Blk	AC Power
14	Wht AC	Power

Legend–Remote V/C End		
Pin	Color	Function
1	Red	IHS Complete Sig.
2	Grn	Upper Limit Sw Sig
3	Blk	Upper Limit Sw Com
4	Blk	IHS Complete Com
5	Drain	Shield-Grn/Blk
7		Key
8	Wht	AC Power
9	Blk	AC Power

Part No.	Length
023859	**25 ft (7.6m)**
023860	**50 ft (15m)**
023861	**75 ft (23m)**
023862	**100 ft (30.5m)**
023863	**150 ft (46m)**
023864	**200 ft (61m)**

Indicates Pairs

Indicates Pairs w/Drain

Note: On IHS End, cut Red/Black Shield & White/Black Shield Wires

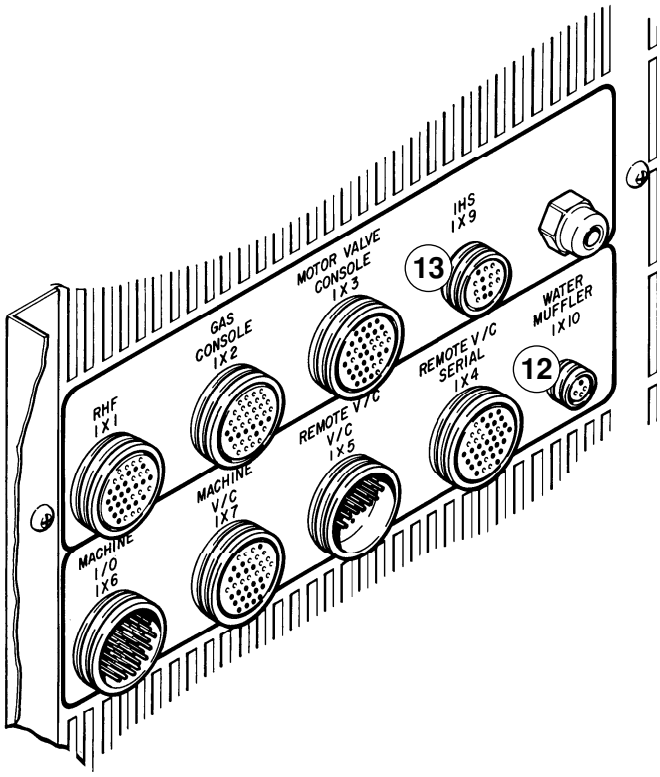

Power Supply – Rear

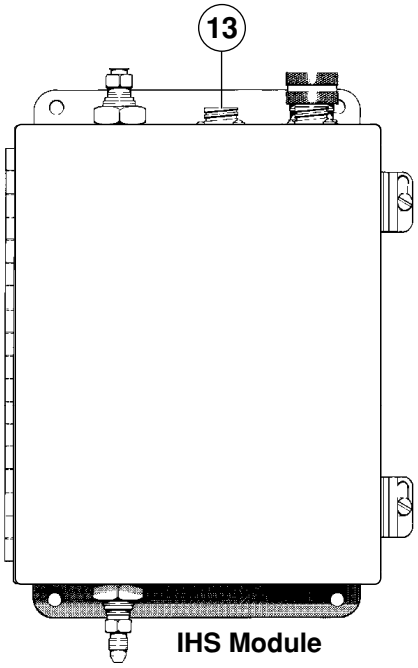

IHS Module

Figure 4-11 Power Supply Connections to Water Muffler and IHS Console

Initial Height Sensing (IHS) Connections

Note: If using Command THC, refer to manual #802780.

See page 4-18 for IHS connection to power supply.

14 *IHS Sensor cables/Inductor Probes – IHS to Inductor Probes*

The two sensor cables are components of the IHS leads packages – see page 9-43.

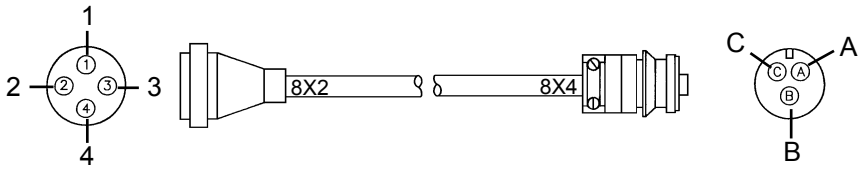

Part No.	Length
023888	2 ft (.6 m)
023869	40 ft (12 m)

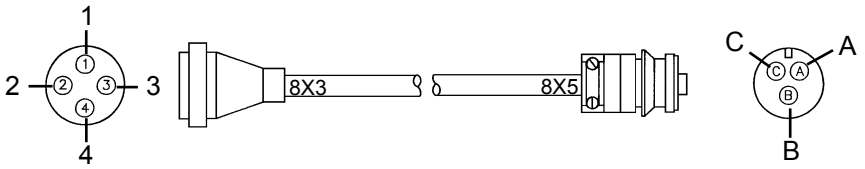

Part No.	Length
023889	2 ft (.6 m)
023870	40 ft (12 m)

Function	IHS End	Color	Probe End
Power (+15 VDC)	4	Red	A
Common	2	Black	B
Signal	1	Clear	C
Shield	3	Braid	

The two inductive probes come as part of the IHS torch mounting subassembly – see page 9-43.

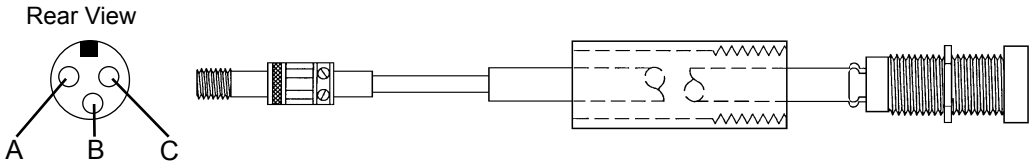

Function	Pin	Color
Power (+15 VDC)	A	Brown
Common	B	Blue
Signal	C	Black

Part No.
005074

15 *IHS Air Supply – Air Supply to IHS Module*

The customer must supply the 20 psig regulated shop air and the air hose.

16 *Air Hose Assembly – IHS Module to Inductive Sensor Air Cylinder*

The 40-foot air hose is a component of the IHS leads packages – see page 9-43.

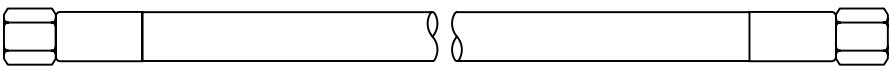

Part No.	Length
024144	40 ft (12 m)

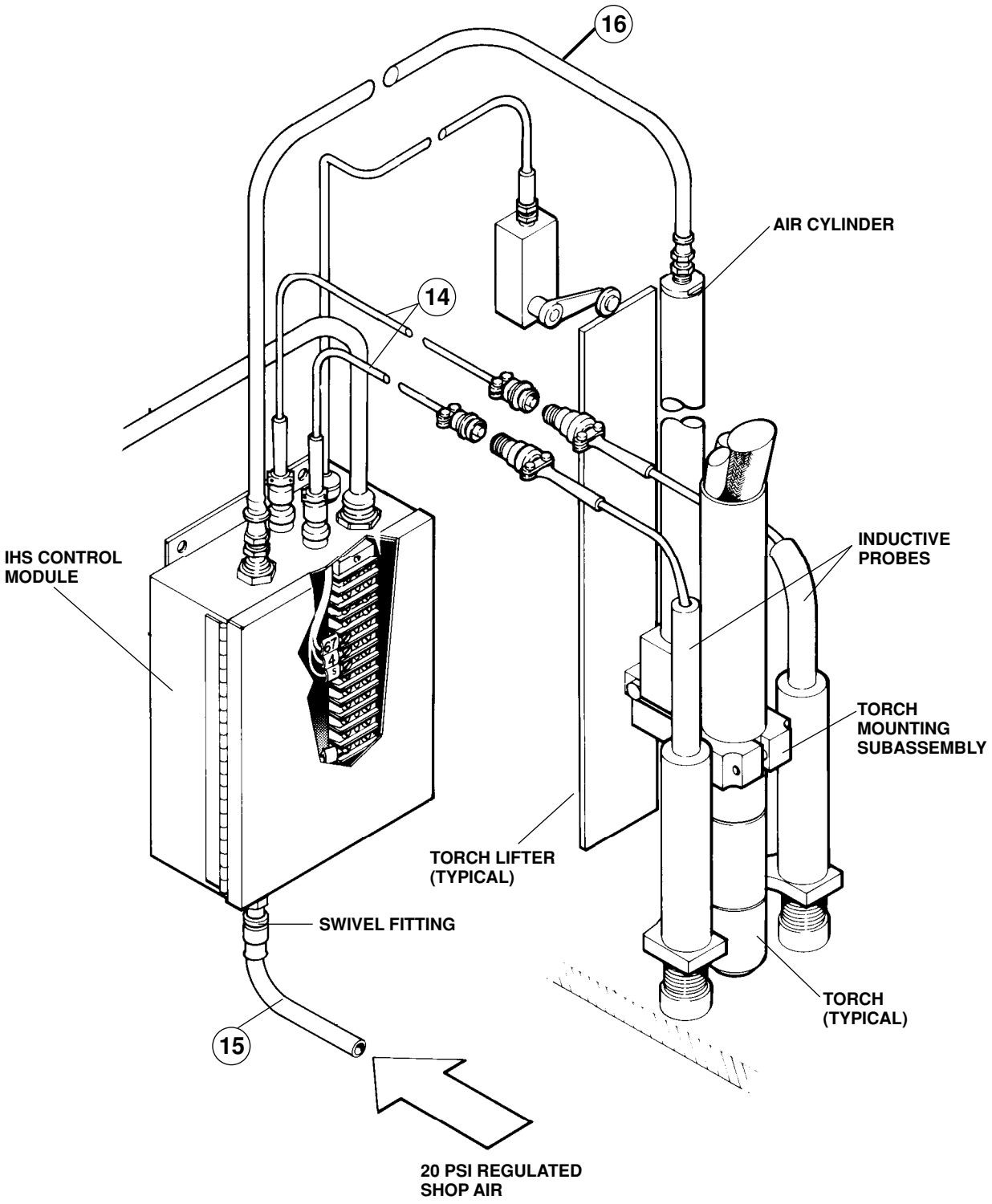

Figure 4-12 Initial Height Sensing Connections

Initial Height Sensing Connections (cont.)

Upper Limit Switch and Cable – Upper Limit Switch to IHS Module

Note: The customer must supply the upper limit switch option.

Switch specifications: **+12 VDC @ 1.2 ma**. Gold-type contacts preferred.
Select a normally closed switch that opens when the lever is up (when the torch fully retracts). Install the upper limit switch behind the torch lifter as in figure 4-13.

Caution: Follow the cable installation procedure below to avoid electromagnetic interference problems with the torch lead set.

1. Use a shielded, twisted pair of 22-24 gauge wire (stranded). Use Belden #8761.
2. At the upper limit switch, connect the common wire (black) and signal wire (clear) to the upper limit switch. Cut the shield drain wire (uninsulated). Wrap the cut end with electrician's tape.
3. At the IHS control module, loosen the two (2) latches and open the front cover.
4. Route the cable through the strain relief to connect the cable wires to 1TB.
5. Connect the shield drain wire (uninsulated) to 1TB-10 (#S). This connects the cable shield to the HT2000 frame. The shield drain must not touch the IHS module case.
6. Connect the common wire (black) to 1TB-11 (#4).
7. Connect the signal wire (clear) to 1TB-12 (#67).

Note: If the upper limit switch signal comes from an interface on the cutting machine, the shield must be electrically isolated from other shields in other cables. Using a separate cable will avoid ground-loop problems.

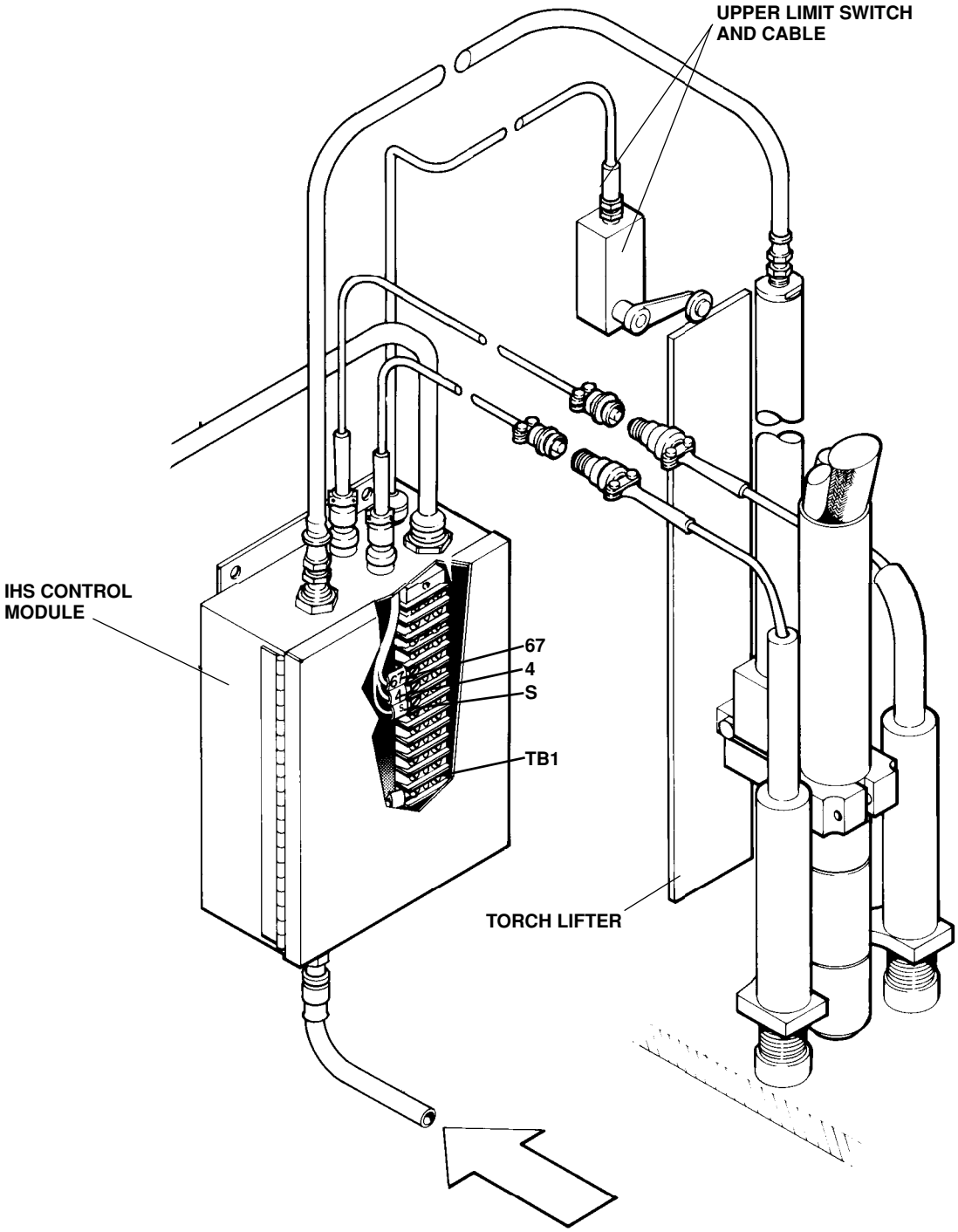

Figure 4-13 Intial Height Sensing Upper Limit Switch Connections

Gas Console Connections

See page 4-10 for gas console connection to power supply.

Plasma Gas Supplies

(17) *Oxygen Plasma Supply Hose – Oxygen Supply to Gas Console*

Note: If cutting with oxygen as the plasma gas, nitrogen must also be connected to the gas console to achieve the proper oxygen/nitrogen mixtures in the preflow and cut flow conditions.

Part No.	Length	Part No.	Length
024204	15 ft (4.6 m)	024206	100 ft (30 m)
024205	25 ft (7.6 m)	024159	150 ft (46 m)
024155	50 ft (15 m)		

(18) *Nitrogen Plasma Supply Hose – Nitrogen Supply to Gas Console*

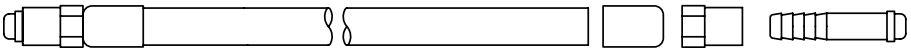

Part No.	Length	Part No.	Length
024210	10 ft (3 m)	024148	75 ft (23 m)
024203	15 ft (4.6 m)	024116	100 ft (30 m)
024232	20 ft (6 m)	024120	150 ft (46 m)
024134	25 ft (7.6 m)	024185	180 ft (55 m)
024211	35 ft (10.6 m)	024124	200 ft (61 m)
024112	50 ft (15 m)		

(18) *Air Plasma Supply Hose* (Customer Supplied) *– Air Supply to Gas Console*

Shield Gas Supplies

Any supply gases that will be used for the shield gas, attach to the same point on the gas console – see Fig. 4-14.

(19) *Shield Gas Supply Hose – Shield Supply to Gas Console*

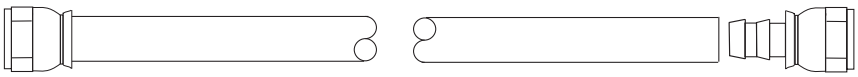

Part No.	Length	Part No.	Length
024043	4 ft (1.2 m)	024147	75 ft (23 m)
024341	10 ft (3 m)	024115	100 ft (30 m)
024342	20 ft (6 m)	024119	150 ft (46 m)
024133	25 ft (7.6 m)	024184	180 ft (55 m)
024012	50 ft (15 m)	024123	200 ft (61 m)

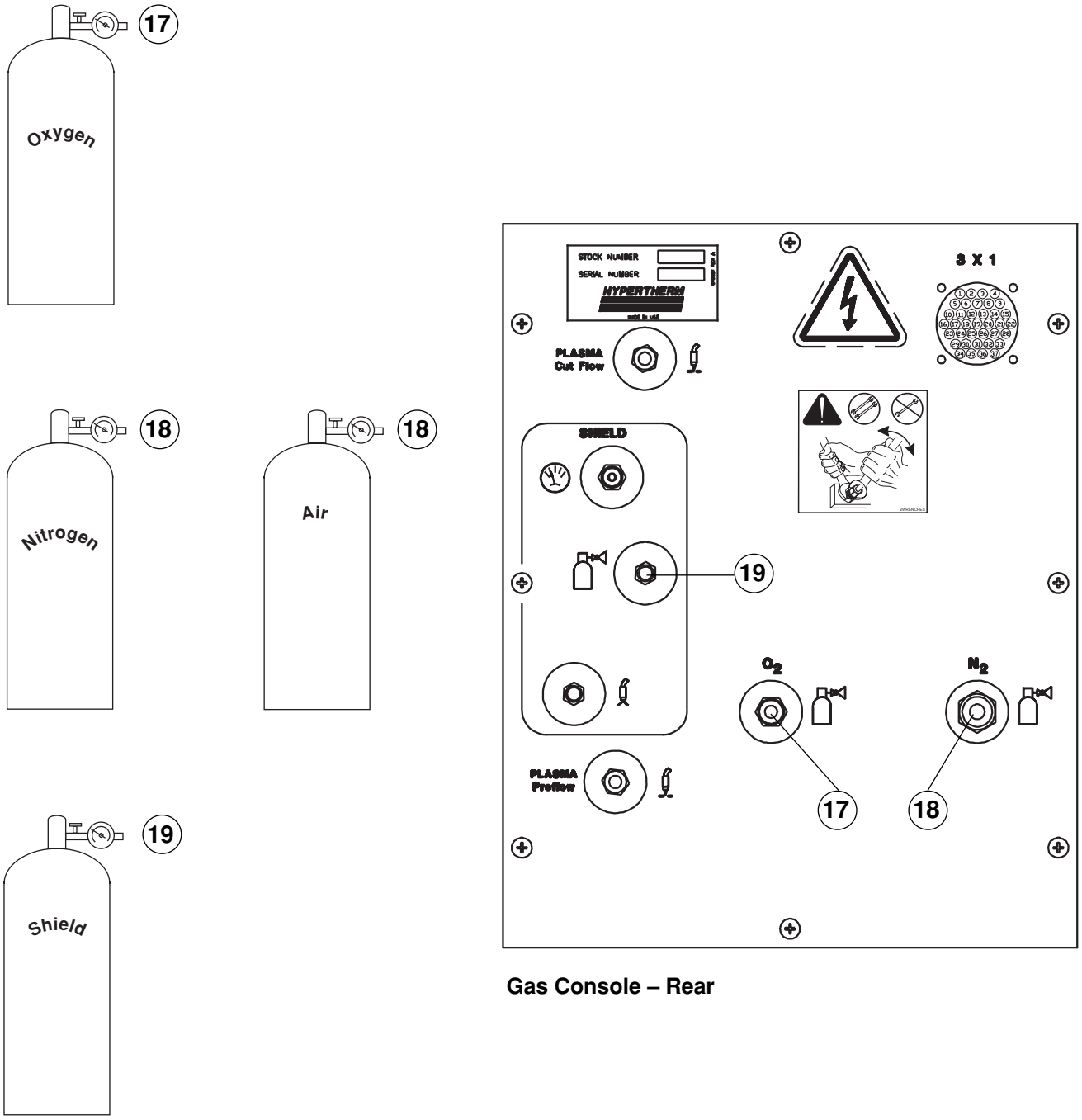

Gas Console – Rear

Figure 4-14 Gas Console Connections – Gas Console to Gas Supplies

Gas Console Connections (cont.)

20 *Shield Gas Hose – Gas Console to RHF Console*

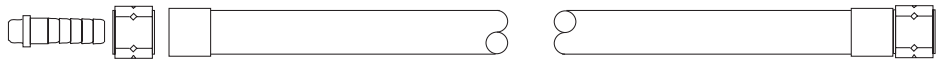

Note: Turn counterclockwise to tighten

Part No.	Length	Part No.	Length
024313	10 ft (3 m)	024305	75 ft (23 m)
024302	15 ft (4.6 m)	024306	100 ft (30 m)
024303	25 ft (7.6 m)	024312	150 ft (46 m)
024304	50 ft (15 m)		

21 *Shield Gas Sense Hose – Gas Console to RHF Console*

Part No.	Length	Part No.	Length
024061	5 ft (1.5 m)	024071	30 ft (9.1 m)
024063	10 ft (3 m)	024092	40 ft (12.4 m)
024065	15 ft (4.6 m)	024096	50 ft (15 m)
024067	20 ft (6.2 m)	024174	60 ft (18.2 m)
024069	25 ft (7.6 m)	024468	75 ft (23 m)

22 *Plasma Preflow Gas Hosing – Gas Console to Motor Valve Console*

Part No.	Length	Part No.	Length
024317	5 ft (1.5 m)	024030	35 ft (10.6 m)
024026	10 ft (3 m)	024031	40 ft (12.4 m)
024027	15 ft (4.6 m)	024207	45 ft (13.8 m)
024017	20 ft (6.2 m)	024340	50 ft (15 m)
024028	25 ft (7.6 m)	024343	75 ft (23 m)
024029	30 ft (9.1 m)	024344	100 ft (30 m)

23 *Plasma Cut Flow Gas Hosing – Gas Console to Motor Valve Console*

Note: Turn counterclockwise to tighten

Part No.	Length	Part No.	Length
024316	5 ft (1.5 m)	024322	35 ft (10.6 m)
024307	10 ft (3 m)	024310	40 ft (12.4 m)
024320	15 ft (4.6 m)	024323	45 ft (13.8 m)
024308	20 ft (6.2 m)	024311	50 ft (15 m)
024321	25 ft (7.6 m)	024357	75 ft (23 m)
024309	30 ft (9.1 m)	024358	100 ft (30 m)

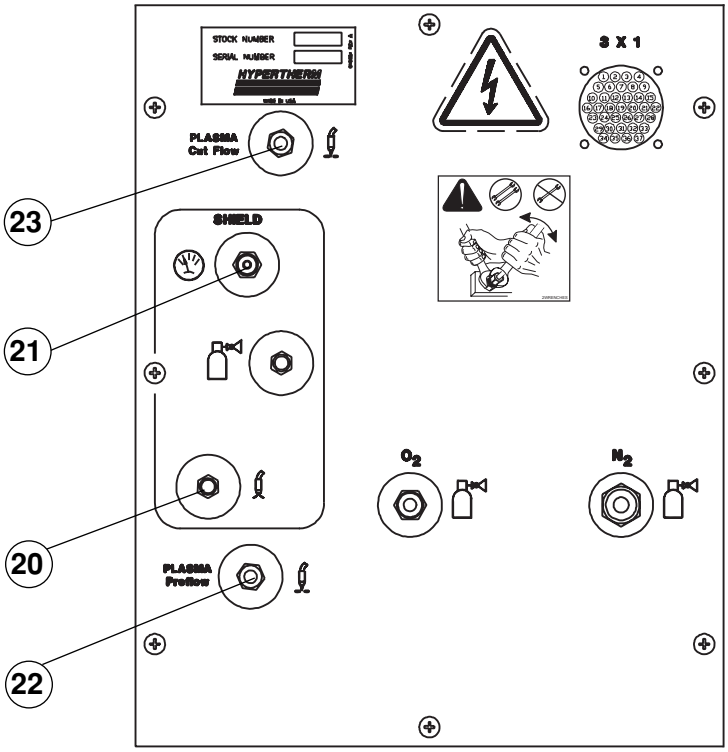

Gas Console – Rear

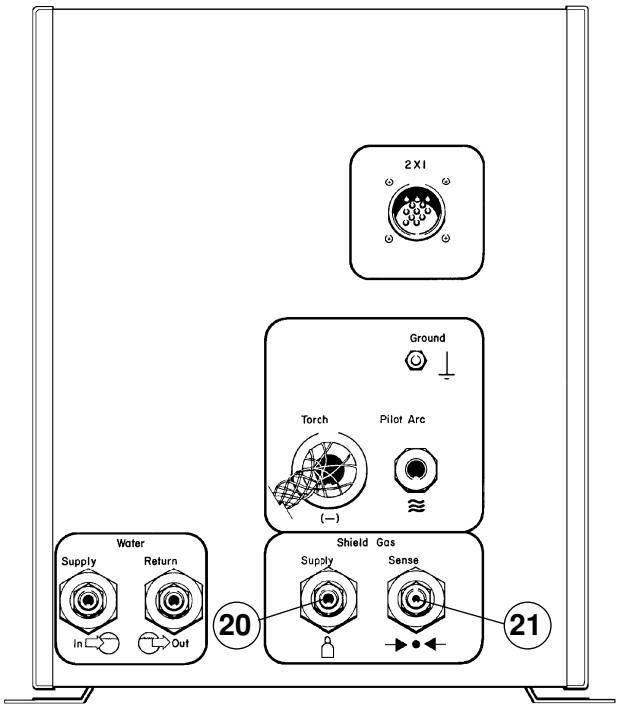

RHF Console – Rear

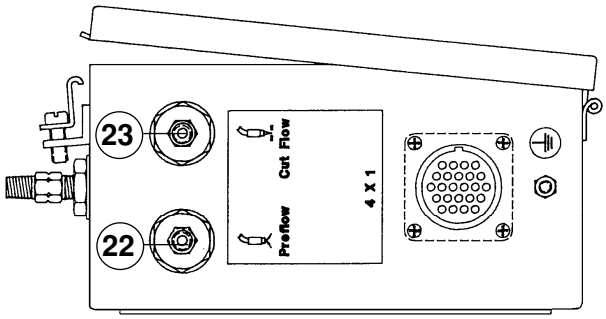

Motor Valve Console – Rear

Figure 4-15 Gas Console Connections – Gas Console to RHF and Motor Valve Consoles

RHF and Motor Valve Consoles to Torch Connections

See pages 4-6 through 4-9 for RHF connections to power supply, and page 4-12 for motor valve console connection to power supply. See also page 4-26 for RHF and motor valve console connections to gas console.

Routing the Torch Leads

Prior to connecting the torch leads to the RHF console, motor valve console and torch, the torch leads must be routed between the cutting machine, RHF console, motor valve console and the torch. See Figure 4-2 for an example. You will generally need to route the leads through a festoon or a power track.

Caution: Before routing the leads, make sure the torch is removed from the torch leads. Damage to the torch could result from dropping, banging, or scraping. Once the torch leads have been routed, proceed with torch connections.

Connecting the HF Torch Leads to the RHF Console

24 ***Torch Leads – HF Torch Leads to RHF Console – Fig. 4-16***

A. Route the HF torch leads through the **Torch Brass Fitting** on the RHF console and connect the **Torch Coolant Hose (w/Red Band)** to the red fitting on the brass cathode block located in the RHF console. Tighten using a 1/2" open-end wrench.

B. Connect the **Torch Coolant Hose (w/ Green Band)** to the green fitting on the brass cathode block. Tighten using a 1/2" open-end wrench.

C. Connect the **Cap-On Sensor Hose (Gray)** to the adapter in the console.

D. Connect the **Pilot/Shield Gas Hose (Blue)** to the bulkhead adapter.

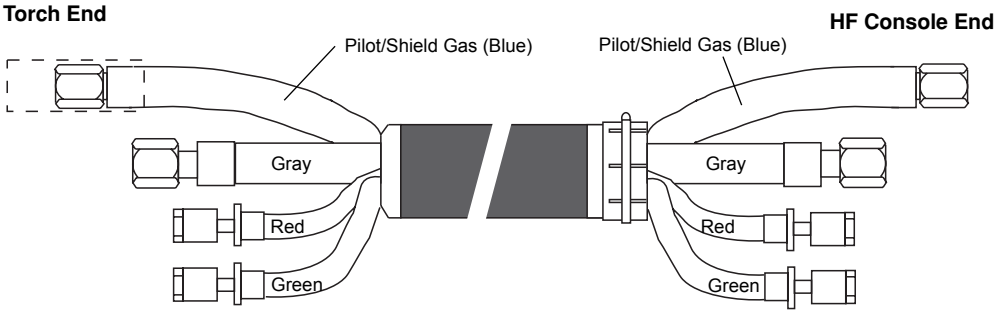

Part No.	Length	Part No.	Length
028657	10 ft (3 m)	028661	35 ft (10.6 m)
028658	15 ft (4.5 m)	028662	40 ft (12 m)
028659	20 ft (6 m)	028663	45 ft (13.7 m)
028546	25 ft (7.5 m)	028547	50 ft (15 m)
028660	30 ft (9 m)		

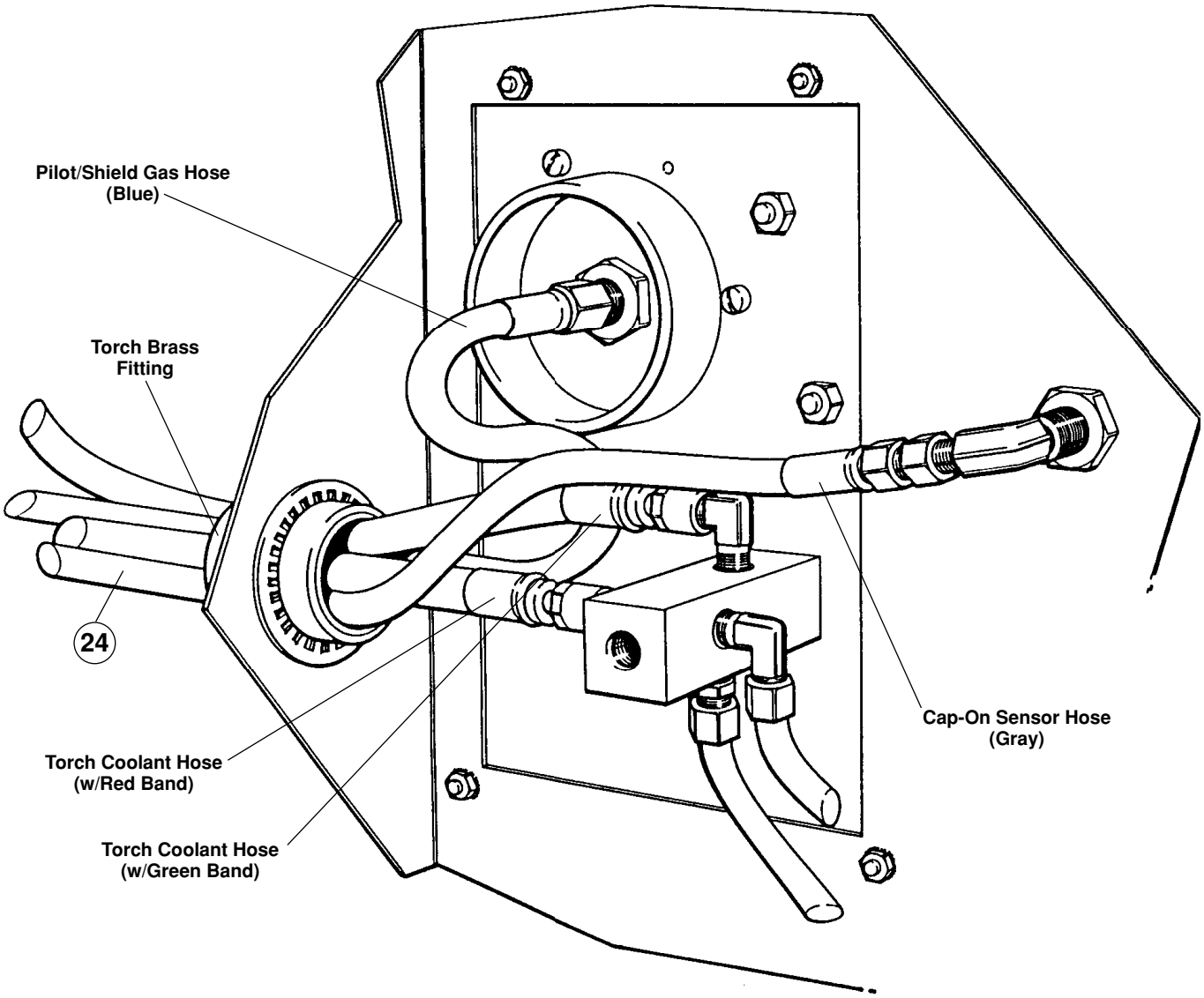

Figure 4-16 HF Torch Lead Connections in RHF Console

RHF and Motor Valve Consoles to Torch (cont.)

Connecting the HF Torch Leads to the Torch

24 ***Torch Leads – RHF Console to Torch (Fig. 4-17)***

A. If connected to the **Off-valve subassembly**, remove the **12" Off-valve hose** from it. Note that the fitting is left-hand threaded and turns in a clockwise direction to remove.

B. Slide the **Torch sleeve** over the RHF torch leads and out of the way.

C. With the red and green torch leads, use a 3/8" open-end wrench to hold the torch body fittings and a 1/2" open-end wrench to turn the torch lead fittings. Attach the leads to the **Red and Green tubes** of the **Torch main body**.

D. Attach the lead with the PTFE tube (**Pilot**/**Shield Gas (Blue)**) to the shortest tube (**Point 3**) on the torch main body. Use a 5/16" open-end wrench to hold the torch body fitting and a 7/16" open-end wrench to turn the torch lead fitting.

E. Finally, connect the gray torch lead hose to **Point 4**. Again, use a 5/16" open-end wrench to hold the torch body fitting and a 7/16" open-end wrench to turn the torch lead fitting.

Note: If the **12" Off-valve hose** is not connected to the torch, make the connection to **Point 5** (left-hand threaded connection) at this time. Use the same wrenches as in steps D&E.

F. Slide the **Torch sleeve** over the torch main body and screw together.

G. Connect the 12" hose that extends beyond the end of the sleeve to the off-valve elbow connected to **Point 2** (left-hand threaded connection).

Connecting the Off-Valve Cable and Plasma Hose from the Torch to the Motor Valve Console

25 ***Cable/Hose: Motor Valve Console to Torch (Fig. 4-17)***

A. Connect the **Plasma hose** from **Point 1** (left-hand threaded connection) of the **Off-valve subassembly** to the **Plasma Flow** connector on the motor valve console.

B. Connect the **Torch off-valve cable** from the **Off-valve subassembly** to the **4X2** connector on the motor valve console.

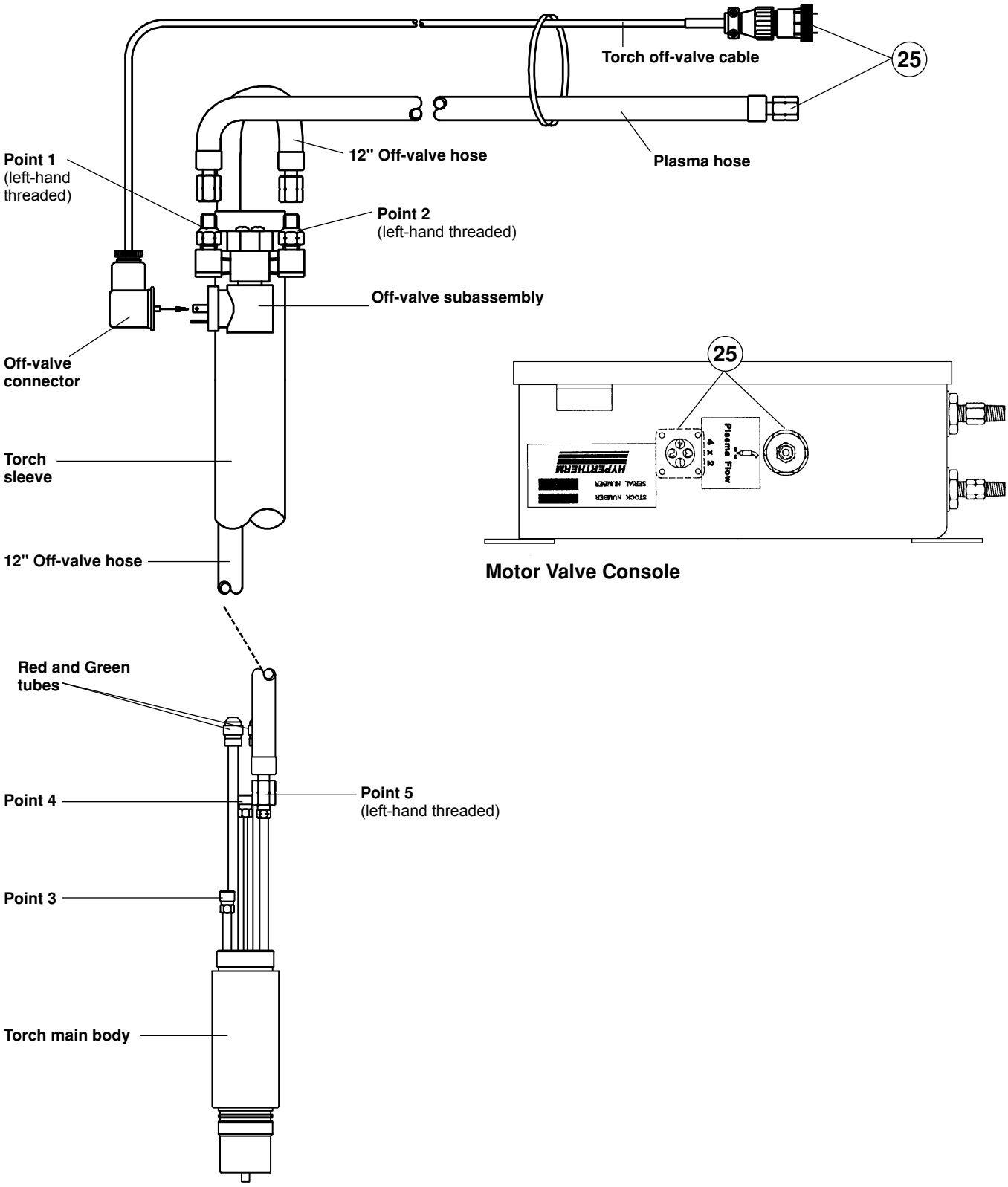

Figure 4-17 Machine Torch Connections

Optional Power Supply Connections

Timer/Counter to Power Supply

26 ***Timer/Counter cable – Power Supply to Timer/Counter***

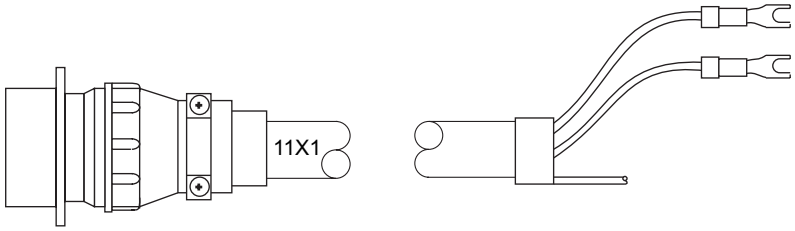

From Timer/Counter 11X1	To HT2000 TB3	Color	Function
1	2	White	Starts & Arc time (CON1 Closed)
2	1	Black	Starts & Arc time (CON1 Closed)
3	3	Drain	Drain
15	5	Red	Error Counter (Ramp Down Error)
16	4	Black	Error Counter (Ramp Down Error)
12	6	Drain	Drain

Part No.	Length	Part No.	Length
023687	**10 ft (3 m)**	**023694**	**75 ft (23 m)**
023692	**25 ft (7.6 m)**	**023695**	**100 ft (30 m)**
023758	**38 ft (12 m)**	**023696**	**150 ft (46 m)**
023693	**50 ft (15 m)**		

Hold Cable Connections (When using Multi-Torch Systems)

If a multi-torch system is being used (more than one power supply), make the following connections at both power supplies:

27 ***Hold Cable Connections – Power Supply 1 to Power Supply 2***

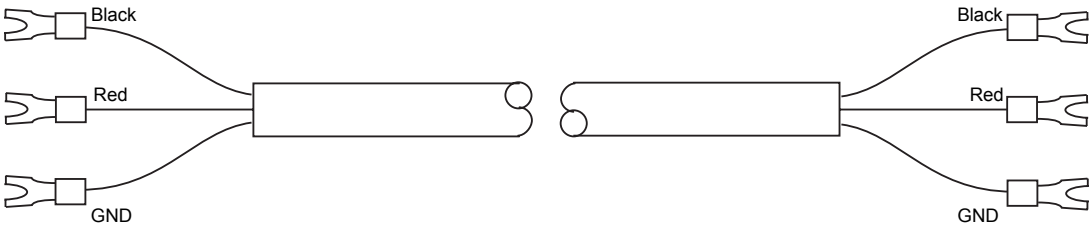

Legend – To HT2000 TB3 – Both Ends			
Wire Color		To HT2000 TB3	Function
–	Black	13	Hold Signal
–	Red	14	Hold Common
GND	Shield	15	Hold Shield

Part No.	Length
023340	**15 ft (4.5 m)**
023341	**25 ft (7.6 m)**
023342	**50 ft (15 m)**
023343	**100 ft (30 m)**
023344	**150 ft (46 m)**

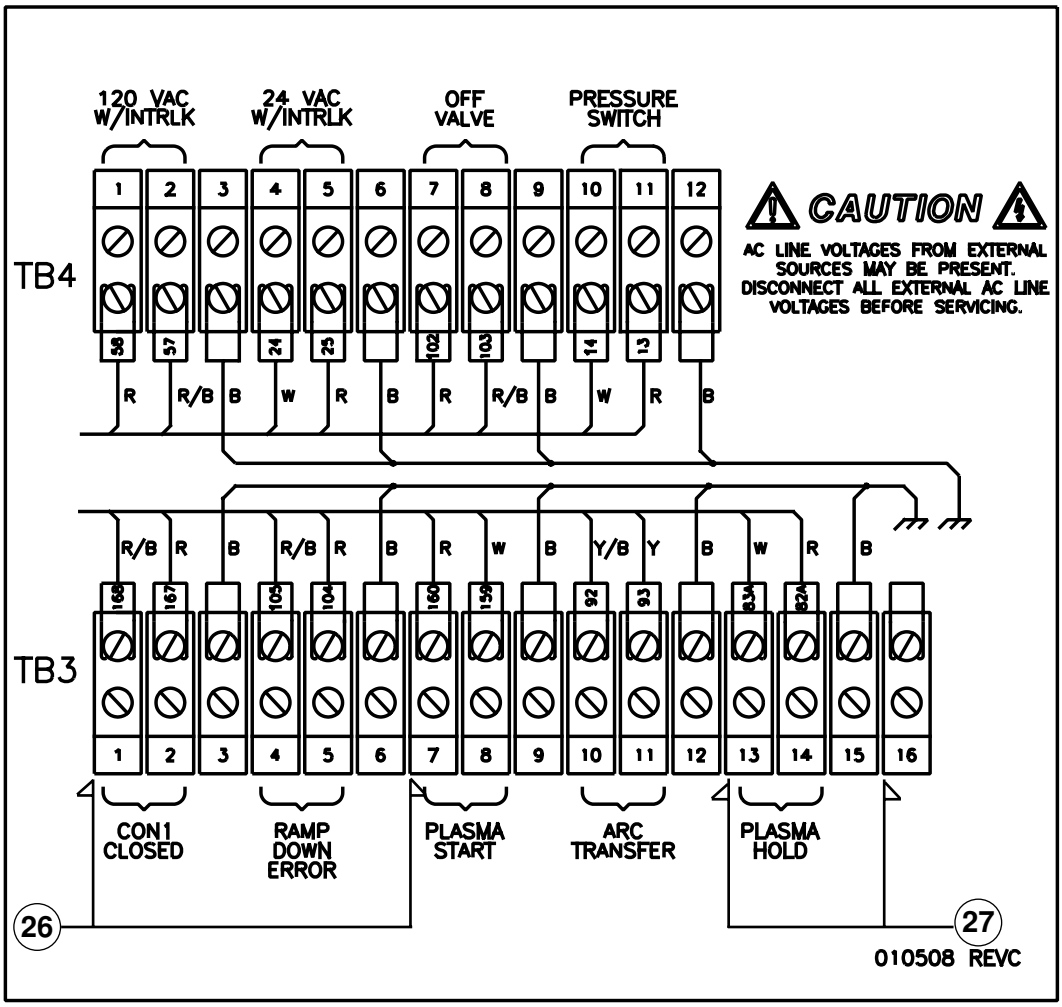

Power Supply – Inside Rear

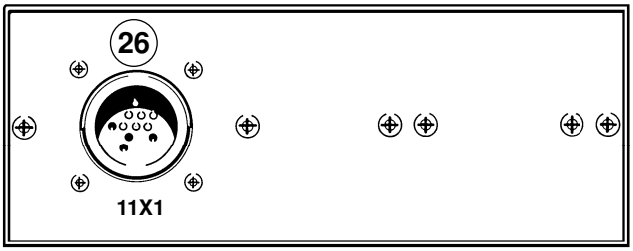

Timer/Counter – Rear

Figure 4-18 Timer/Counter Cable Connections / Hold Cable Connections

Argon-Hydrogen Connections

See **Section 7**: Operation: Argon-Hydrogen Manifold.

Mounting the Machine Torch

1. Loosen **Securing screw(s)** and install the machine torch (with torch leads attached) in the torch mounting bracket or the torch mounting subassembly if IHS is used. See Figure 4-19 for torch mounting bracket with IHS, and Figure 4-20 for torch mounting bracket without IHS.

2. Position the torch until the torch body extends all the way through the bracket, so that the bracket is now around the plastic **Torch sleeve** and not touching the stainless steel torch body. Position the torch approximately .25 " (6mm) from the work surface.

3. Tighten the securing screw(s). Final adjustment of the torch height is detailed in **Section 5: Post-Installation**.

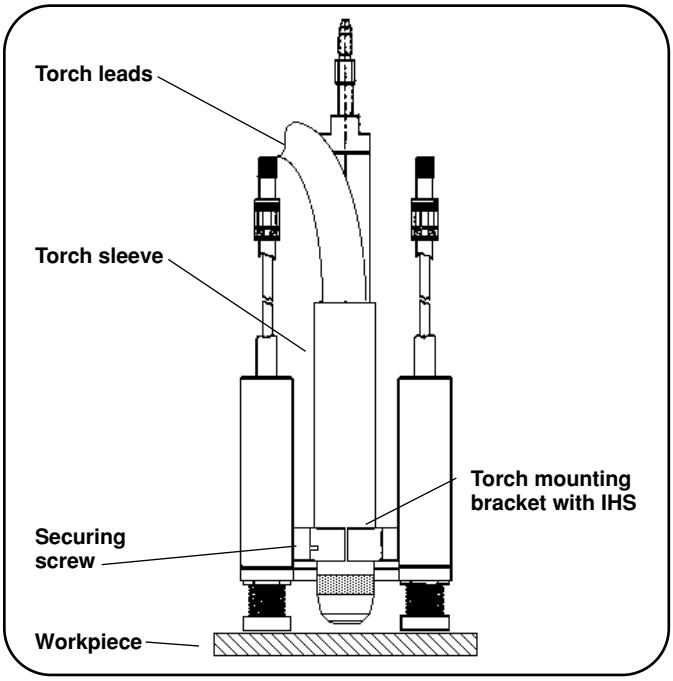

Figure 4-19 Mounting the Machine Torch (shown with IHS probes)

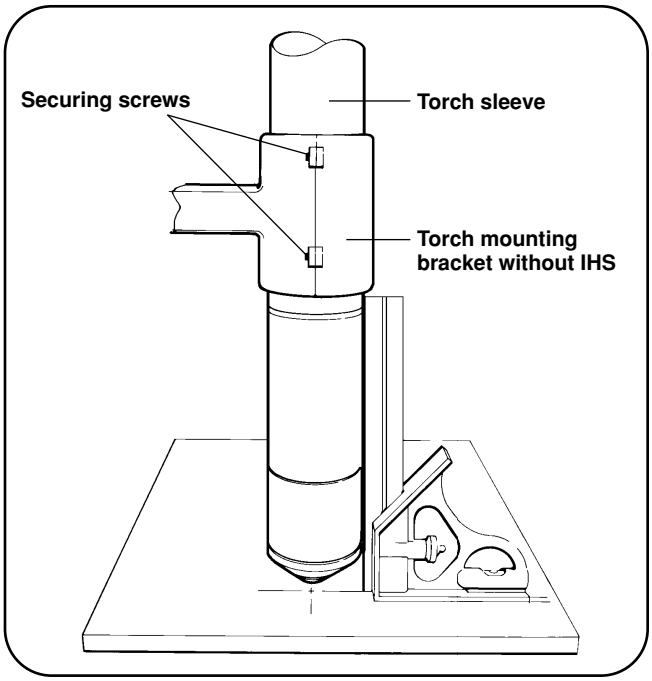

Figure 4-20 Torch Alignment (shown without IHS probes)

Torch Alignment

Prior to cutting with the machine torch, ensure that the torch is at right angles to the workpiece to get a clean, vertical cut. Use a square to align the torch. The torch should be aligned at 0° and 90° (Figure 4-20).

Section 5

POST-INSTALLATION

In this section:

Introduction 5-2
System Checkout.....5-3
Set Switches and Check Torch 5-3
Turn Gases On.....5-3
Turn Power Supply On and Adjust Voltage/Current 5-3
Adjust Preflow Gases.....5-5
Adjust Cut Flow Gases and Check Initial Height Sensing (IHS) 5-5
Final Torch Adjustment.....5-6
Check Torch Height Control (THC) and V/C Module.....5-6

Introduction

Prior to operating the system, perform a post-installation system checkout to ensure that the pre-installation and installation requirements and connections are correct, and to make any necessary final adjustments before actual production cutting begins.

Before proceeding with the system checkout:

- Ensure that your cutting environment and that your clothing meet the safety requirements outlined in the **Safety** section of this manual.
- Be certain that all pre-installation and installation requirements have been met. Refer to Section 3 **Pre-Installation** and Section 4 **Installation** in this manual.

System Checkout

The following procedure assumes the system includes an IHS system, and a Digital Remote (DR) V/C control module. Refer to Figure 5-1.

Set Switches and Check Torch

1. Ensure that the unit switches listed below are positioned as follows:

   The main disconnect switch for the power supply is set to **Off**.

   The **Test Preflow**/**Run**/**Test Cut Flow** toggle switch on the gas console is set to **Run.**

2. Ensure that the proper consumables are installed in the torch. Refer to the *Cut Charts* in **Section 6** to choose the correct consumables for your cutting needs. See also *Changing Consumable Parts* in **Section 6**.

3. Ensure that the torch is squared to the material. Refer to **Section 4** for the torch alignment procedure.

Turn Gases On

4. Set the plasma gas select switch on the gas console to **N_2**/**Air** or **O_2**.

5. Turn the required supply gases **On.**

   - When using **oxygen, nitrogen,** or **argon-hydrogen** as the **plasma gas**, adjust supply regulator to read **120 psi +/- 10 psi (8.3 bar +/- 0.7 bar)**.

     When using **air** as the **plasma gas**, adjust supply regulator to read **90 psi +/- 10 psi (6.2 bar +/- 0.7 bar).**

   - Adjust supply regulator for **shield gas** to read **90 psi +/- 10 psi (6.2 bar +/- 0.7 bar)**.

Turn Power Supply On and Adjust Voltage/Current

6. Set the main disconnect switch for the power supply to the **On** position. See *Status Indicators Before Startup* in **Section 6**. Depress the **POWER ON (1)** button on the power supply.
   Ensure the green **POWER ON** indicator on the power supply lights.

7. Set the **VOLTAGE** and **CURRENT** on the DR V/C module. Select the arc current and arc voltage from the *Cut Charts* in **Section 6** for the type and thickness of metal to test cut.

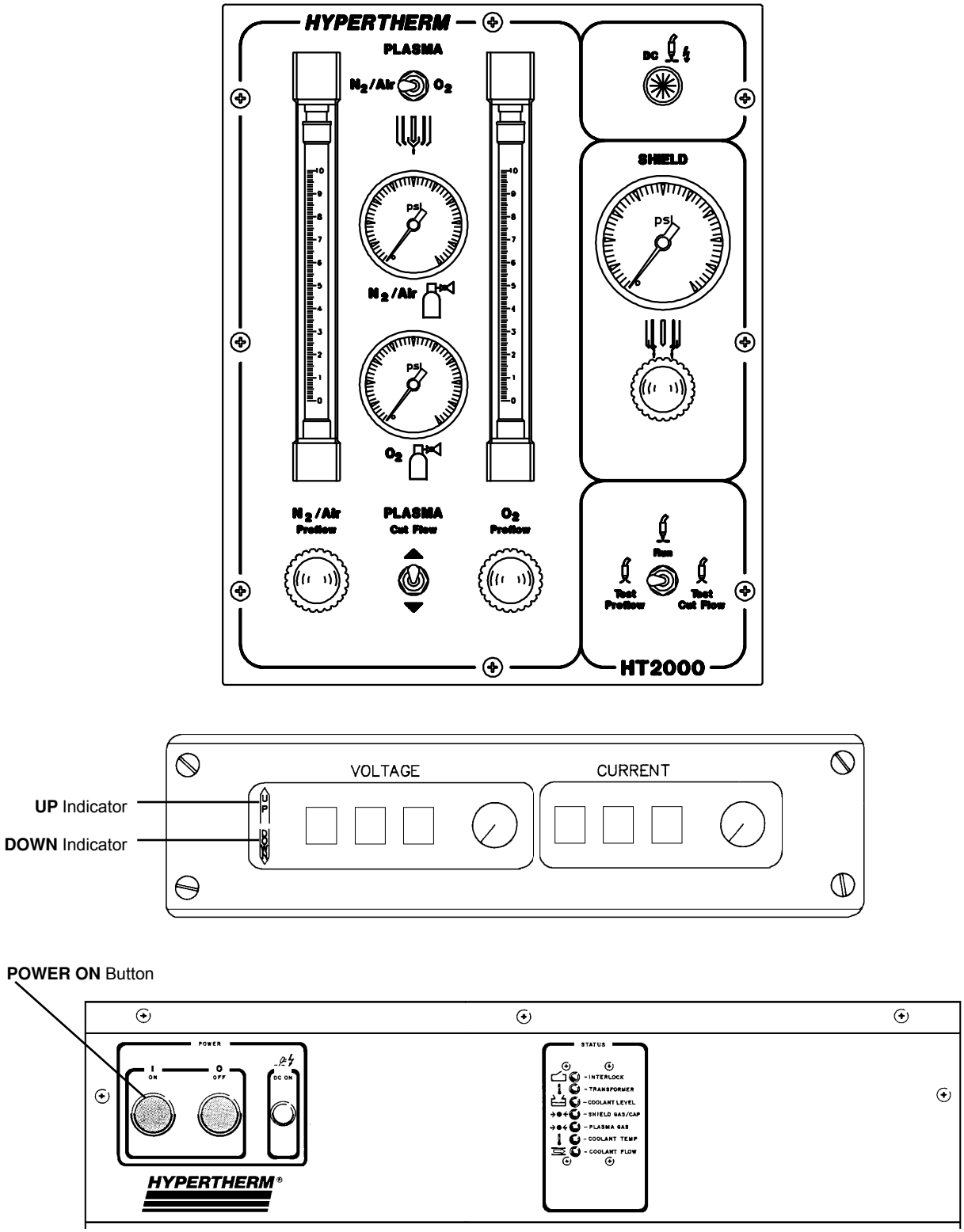

Figure 5-1 Controls and Indicators for System Checkout

Adjust Preflow Gases

8. Set the **Test Preflow**/**Run**/**Test Cut Flow** toggle switch to **Test Preflow**.
   Verify that the plasma gas pressure gauges on the gas console both read 120 psi (8.3 bar). 90 psi for Air/N_2 process.

9. Look at the oxygen and/or nitrogen-air flowmeters and set the **Preflow** plasma gas flow rate % by referring to the *Cut Charts* in **Section 6** and turning the oxygen and/or nitrogen-air **Preflow** adjust knobs.

10. Look at the shield gas pressure gauge on the gas console, and set to the *Cut Chart* specifications by turning the shield gas adjust knob.

Adjust Cut Flow Gases and Check Initial Height Sensing (IHS)

11. Set the **Test Preflow**/**Run**/**Test Cut Flow** toggle switch to **Test Cut Flow**.

12. Look at the oxygen and/or nitrogen-air flowmeters and set the **Cut Flow** plasma gas flow rate % by referring to the *Cut Charts* in **Section 6**. Use the **Cut Flow** toggle switch to set the plasma gases in this mode. Verify that the O_2 plasma gas pressure reads 120 psi on the gas console. Adjust if necessary.

13. Set the switch to **Run** after setting the preflow and plasma flow rates.

14. Check the pilot arc operation by positioning the torch a **minimum of 3 inches (75mm)** above the work.

15. Depress the **START** button. After two seconds of gas preflow, the primary contactor will close and the pilot arc will start. The pilot arc should emit a steady, hissing sound and a cone of light should appear at the face of the torch nozzle. The pilot arc will continue for approximately 300 milli-seconds (O_2), 600 milli-seconds (Air/N_2) and then go out automatically.

16. Place the metal on the work table to make a test pierce. With manual starting, no machine motion will occur.

    Note: The cutting machine must retract the torch at least one inch (25.4 mm) from the work before the start cycle, or probes may hit the workpiece when START button is depressed.

    Command THC users should reference the appropriate Command instruction manual.

17. Depress the **START** button. The probes will immediately descend and approximately 0.5 seconds later, the torch will index toward the work. The **DOWN** indicator light on the V/C control should be on. When the torch nears the work, probes will inductively detect work surface and down motion should stop. The **DOWN** indicator light on the V/C module will go off and the probes will start to retract.

    At this point, depress the **STOP** button and disable the Initial Height Sensing. You are now ready for Final Torch Adjustment.

Final Torch Adjustment (Fig. 5-2)

18. Make a reference mark on the top and bottom of the **Torch sleeve** where it meets the **Torch mounting bracket**.

19. Loosen the **Securing screw** on the **Torch mounting bracket** and position the torch higher in the mounting bracket until the arc will not transfer when the **START** button is depressed.

20. Once reaching this position, slowly lower the torch in 1/16" (1.6 mm) increments until the arc transfers after the **START** button is depressed. This should be the highest point from the workpiece that the arc will still transfer.
    Tighten the **Securing screw** at this position.

21. Enable the Initial Height Sensing and press the **START** button. Once the arc transfers and the machine delay time has elapsed, the metal should be pierced. Press the **STOP** button to terminate the plasma arc. Observe that the **UP** indicator lights and the torch retracts to the upper limit switch.

22. Disable the Initial Height Sensing.

Check Torch Height Control (THC) and V/C Module

23. Angle the workpiece on the work table (one end higher than the other) to check the auto height (torch height control) mode. Position the torch at the highest point on the workpiece. Program a square cut pattern into the controller. (See controller instruction manual.)

24. Enable the Auto Height Control for the THC.

25. Manually lower the torch to approximately .25 inches (6mm) above the workpiece.

26. Start the arc transfer from the controller.

27. When the arc transfers and the machine delay time has elapsed, the workpiece should be pierced and machine motion will start. As the torch travels from a high point to a low point, note that the torch stand-off distance from the workpiece should remain constant, and that the **DOWN** indicator lights on the DR V/C module.

    As the torch travels from a low point to a high point, note that the torch stand-off distance from the workpiece should remain constant and that the **UP** indicator lights on the DR V/C module.

    As the torch makes a corner cut, the machine motion speed should remain constant and the **UP** and **DOWN** indicators do not light. Machine motion and plasma arc will automatically stop when the cut is complete.

The system is now operational.

If the system does not function as outlined in this procedure, recheck the pre-installation requirements and installation directions in this manual. If all pre-installation and installation directives have been followed and you are still experiencing difficulty with the system, feel free to call Hypertherm's Field Service group at 1-800-643-9878.

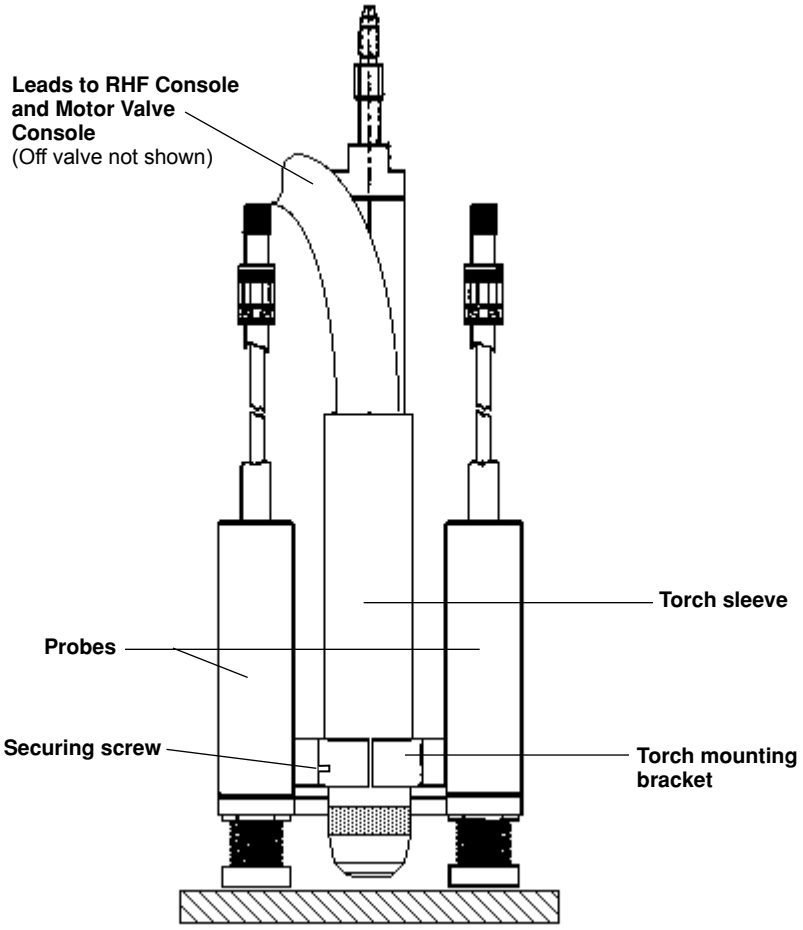

Figure 5-2 Torch with inductive probes

Section 6

OPERATION

In this section:

Front Panel Controls and Indicators 6-2
Power Supply 6-2
STATUS Indicators Before Startup 6-3
Gas Console 6-4
Digital Remote (DR) V/C Module 6-6
Programmable Remote (PR) V/C Module 6-7
Timer / Counter 6-7
Noise Levels (Decibels) 6-8
Daily Start-Up 6-9
Check Torch 6-9
Turn Gases On 6-9
Turn Power Supply On and Adjust Voltage/Current 6-10
Adjust Preflow Gases 6-10
Adjust Cut Flow Gases and Prepare for Cutting 6-11
Common Cutting Faults 6-11
Technical Questions 6-12
Cut Charts 6-12
Conversions 6-12
Cut Charts and Consumable Parts Index 6-13
Changing Consumable Parts 6-36
Removal and Inspection 6-37
Replacement 6-38
Changing the Water Tube 6-39
How to Optimize Cut Quality 6-40
Tips for Table and Torch 6-40
Plasma Set-up Tips 6-40
Maximize the Life of Consumable Parts 6-40
Additional Factors of Cut Quality 6-41
Additional Improvements 6-42

Front Panel Controls and Indicators

Power Supply (Fig. 6-1)

POWER

- **ON (1)** Pushbutton/indicator switch
  Activates the power supply and its control circuits. Indicator illuminates when power up is complete and status indicators are satisfied.

- **OFF (0)** Pushbutton switch
  Shuts the power supply down.

- **DC ON** Indicator
  Illuminates when main contactor closes, indicating DC power is being supplied to the torch.

STATUS

The STATUS indicators are all extinguished during normal operation.

- **INTERLOCK** LED
  When illuminated, indicates that one of the door interlock switches in the RHF console is disengaged.

- **TRANSFORMER** LED
  When illuminated, indicates that either the power supply main transformer or one of the choppers is operating above the proper temperature range.

- **COOLANT LEVEL** LED
  When illuminated, indicates that the coolant level is inadequate.

- **SHIELD GAS/CAP** LED
  When illuminated, indicates that either the shield gas pressure is inadequate, or that the retaining cap is installed improperly on the torch.

- **PLASMA GAS** LED
  When illuminated, indicates that the plasma gas pressure is inadequate.

- **COOLANT TEMP** LED
  When illuminated, indicates that the torch coolant temperature is too high (above 70°C (160°F)).

- **COOLANT FLOW** LED
  When illuminated, indicates that the coolant flow from the torch is inadequate.

STATUS Indicators Before Startup

When power is applied from the line disconnect switch and before the POWER ON (I) button is pushed, the coolant flow LED will be illuminated. Once the POWER ON button is pushed and held for a few seconds, this LED will extinguish if the system is in proper working condition.

Other fault conditions may also be indicated when the line power is switched on. Be sure to press and hold the power supply POWER ON (I) button (in some cases up to 1 minute) to extinguish all status indicators. If any LEDs remain illuminated, shut down the system and correct the problem. See *Status LED Troubleshooting* in **Section 8**, if necessary.

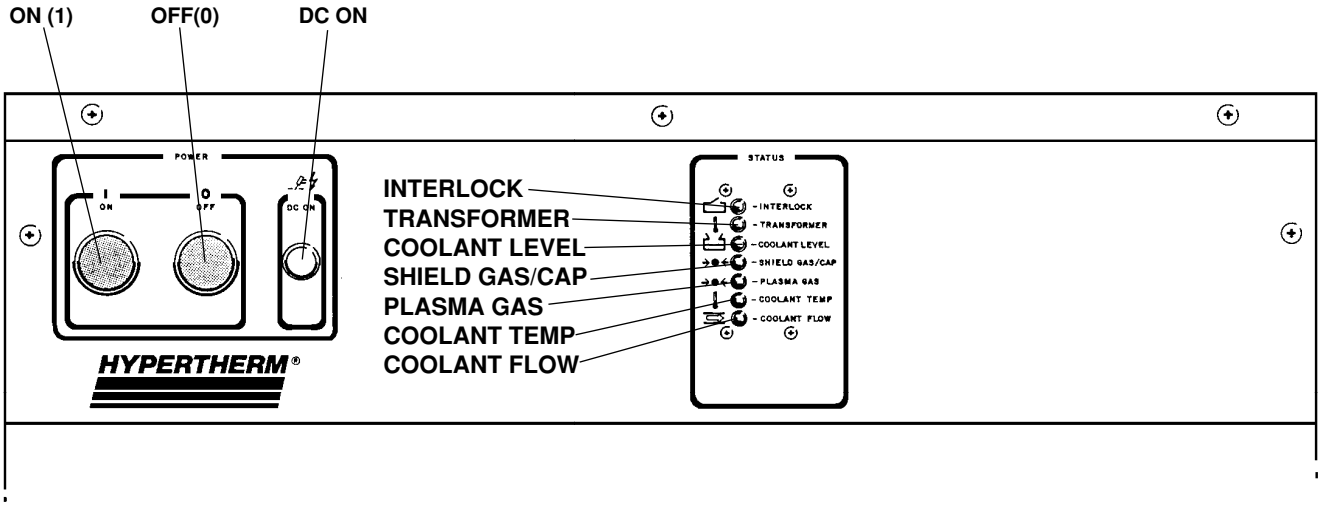

Figure 6-1 Power Supply Front Panel Controls and Indicators

Front Panel Controls and Indicators (cont.)

Gas Console (Fig. 6-2)

- **N_2 Air** / **O_2** Toggle Switch **(S1)**
  Selects the use of either nitrogen, air or oxygen as the plasma cutting gas.

- **N_2** / **Air** Pressure Gauge **(PG1**)
  Indicates the nitrogen or air plasma inlet pressure. Gas inlet pressures are specified in *Cut Charts*.

- **N_2** / **Air** Flowmeter **(FM1)**
  Indicates the percentage rate of nitrogen or air plasma gas flow. Nitrogen or air flow rate % is specified in *Cut Charts*.

- N_2 / Air **Preflow** Metering Valve **(MV2)**
  Adjusts nitrogen or air plasma gas flow rate % while in **Test**/**Preflow** mode. Preflow plasma gas flow rate percentages are specified in *Cut Charts*.

- **O_2** Pressure Gauge **(PG2)**
  Indicates the oxygen plasma inlet pressure. Gas inlet pressures are specified in *Cut Charts*.

- **O_2** Flowmeter **(FM2**)
  Indicates the percentage rate of oxygen plasma gas flow. Oxygen flow rate % is specified in *Cut Charts*.

- **O_2 Preflow** Metering Valve **(MV3)**
  Adjusts oxygen plasma gas flow rate % while in **Test**/**Preflow** mode. Preflow plasma gas flow rate percentages are specified in *Cut Charts*.

- **PLASMA Cut Flow** Switch **(S3)**
  Adjusts nitrogen, air or oxygen plasma gas flow rate % while in **Test Cut Flow** mode.
  Cut Flow plasma gas flow rate percentages are specified in *Cut Charts*.

- **Test Preflow**/**Run**/**Test Cut Flow** Toggle Switch **(S2)**

  Test Preflow – This test position is used when setting the plasma preflow flow rate on the flowmeter. In this position the contactor is disabled, so that current is not delivered to the electrode and the arc cannot be fired.

  Test Cut Flow – This test position allows the selected plasma gas flow rate to be adjusted on the flowmeter for cutting conditions. In this position also, the contactor is disabled so that current is not delivered to the electrode and the arc cannot be fired.

  Run – This position enables the contactor and the subsequent firing of the arc after the gas rates have been set in the **Test Preflow** and **Test Cut Flow** positions.

- **Shield** Pressure Gauge **(PG3)**
  Indicates shield gas pressure at the torch.

- **Shield** Gas Metering Valve **(MV4)**
  Adjusts shield gas pressure to the torch.

- **DC** Light **(LT1)**
  Lights when main contactor closes, indicating DC power is being supplied to the torch.

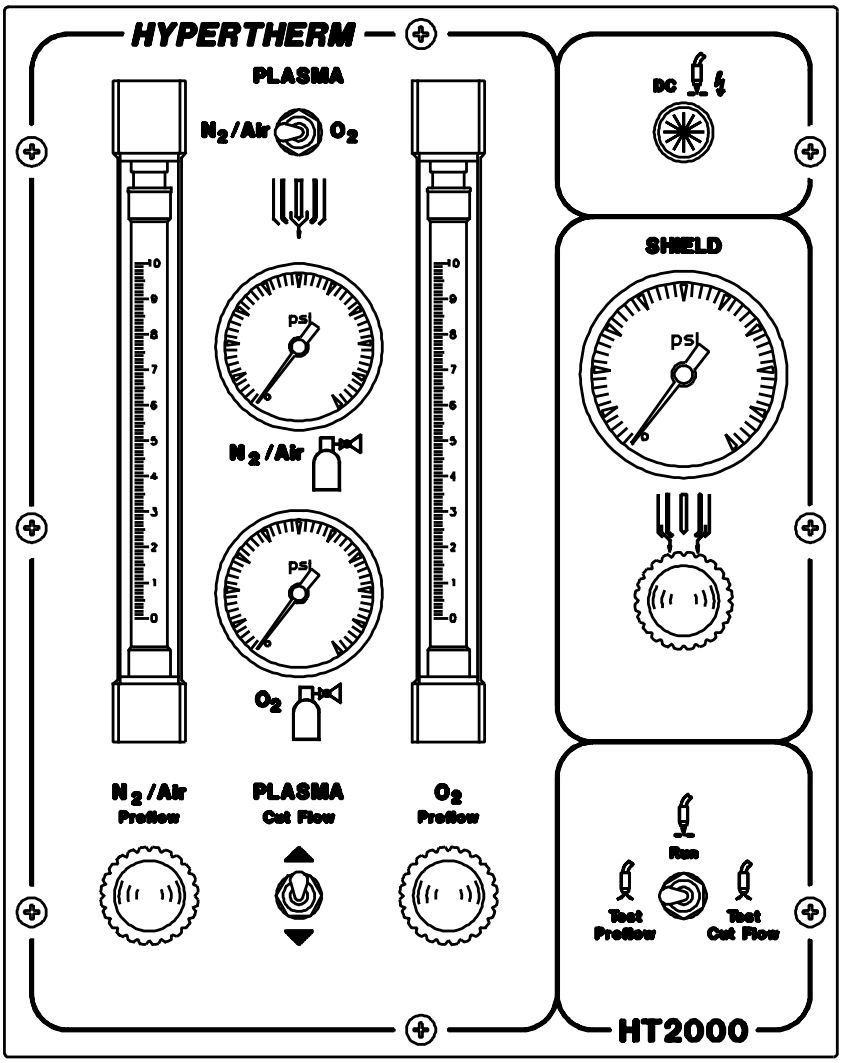

Figure 6-2 Gas Console Front Panel Controls and Indicators

Front Panel Controls and Indicators (cont.)

Digital Remote (DR) V/C Module (Fig. 6-3)

- **VOLTAGE Adjust Pot**
  Adjusts the cutting arc voltage from 100 to 200 volts. Values are chosen from the *Cut Charts* and depend on the type of metal to cut, and metal thickness.

- **VOLTAGE** LEDs
  Displays cutting voltage.

- **CURRENT Adjust Pot**
  Adjusts the cutting arc current from 40 amps to 200 amps. Values are chosen from the *Cut Charts* and depend on the type of metal to cut, and metal thickness.

- **CURRENT** LEDs
  Displays cutting current.

- **UP** / **DOWN** LEDs
  Indicates that torch height is being adjusted up or down.

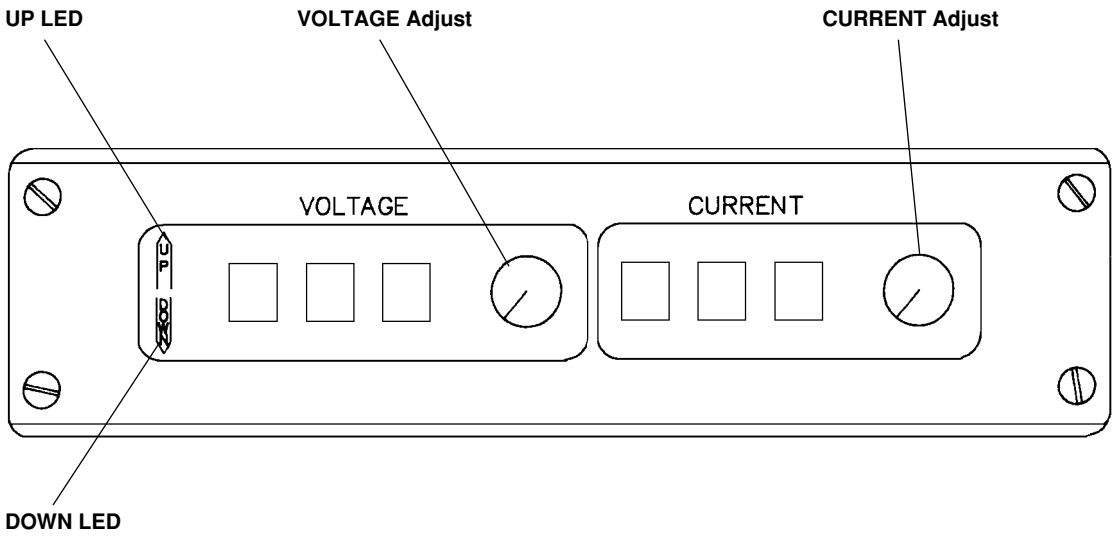

Figure 6-3 Digital Remote (DR) V/C Front Panel Controls and Indicators

Programmable Remote (PR) V/C Module (Fig. 6-4)

- **VOLTAGE** LEDs
  Displays cutting voltage during cut sequence.

- **CURRENT** LEDs
  Displays cutting current during cut sequence.

- **UP** / **DOWN** LEDs
  Indicates that torch height is being adjusted up or down.

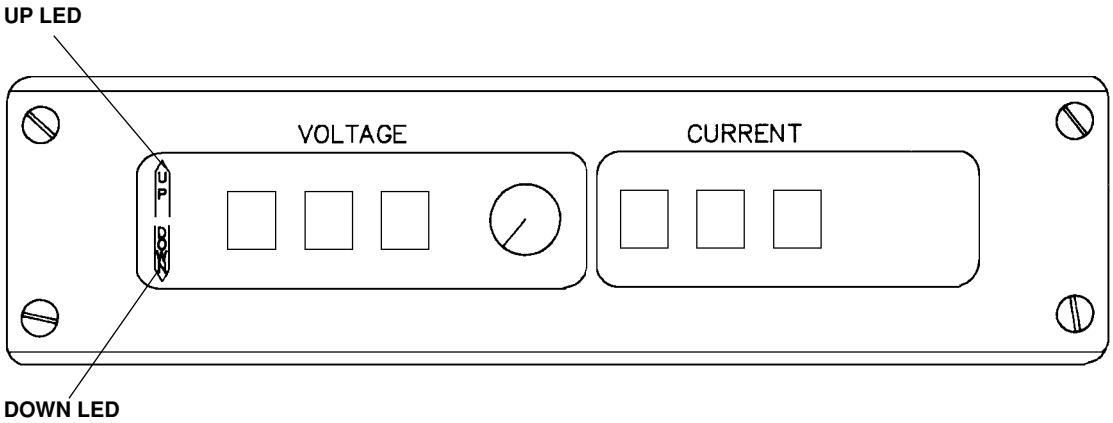

Figure 6-4 Programmable Remote (PR) V/C Front Panel Indicators

Timer / Counter (Fig. 6-5)

- **STARTS** LCD Counter (w/Reset)
  Indicates the number of arc starts

- **ARC TIME** LCD Counter
  Indicates the cumulative time that the arc is on in hours.

- **ERRORS** LCD Counter (w/Reset)
  Indicates the number of times that the arc cut cycle ended before the programmed current ramp-down time had elapsed.
  This reading provides a direct correlation to the long-life operation of the electrode; the higher the reading, the shorter the electrode life.

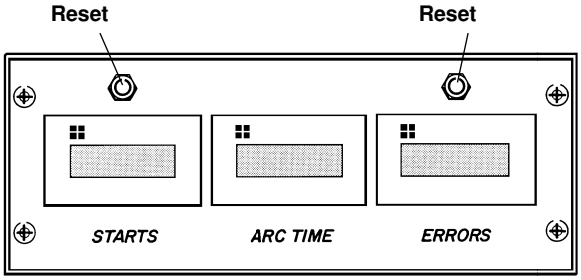

Figure 6-5 Timer / Counter

Noise Levels (Decibels)

Decibels experienced by an operator standing 10 feet from the torch in a confined area (see dimensions below) under varied setup conditions while cutting one-inch mild steel using oxygen at a travel rate of 20 inches per minute.

- Above water 6" without Water Muffler @ 10 feet - 106 dbs
- Above water 6" with Water Muffler @ 10 feet - 104 dbs
- Water at bottom of plate without Water Muffler @ 10 feet- 100 dbs
- Water at bottom of plate with Water Muffler @ 10 feet- 95 dbs
- Water 3" over plate without Water Muffler @ 10 feet- 75 dbs
- Water 3" over plate with Water Muffler @ 10 feet- 72 dbs

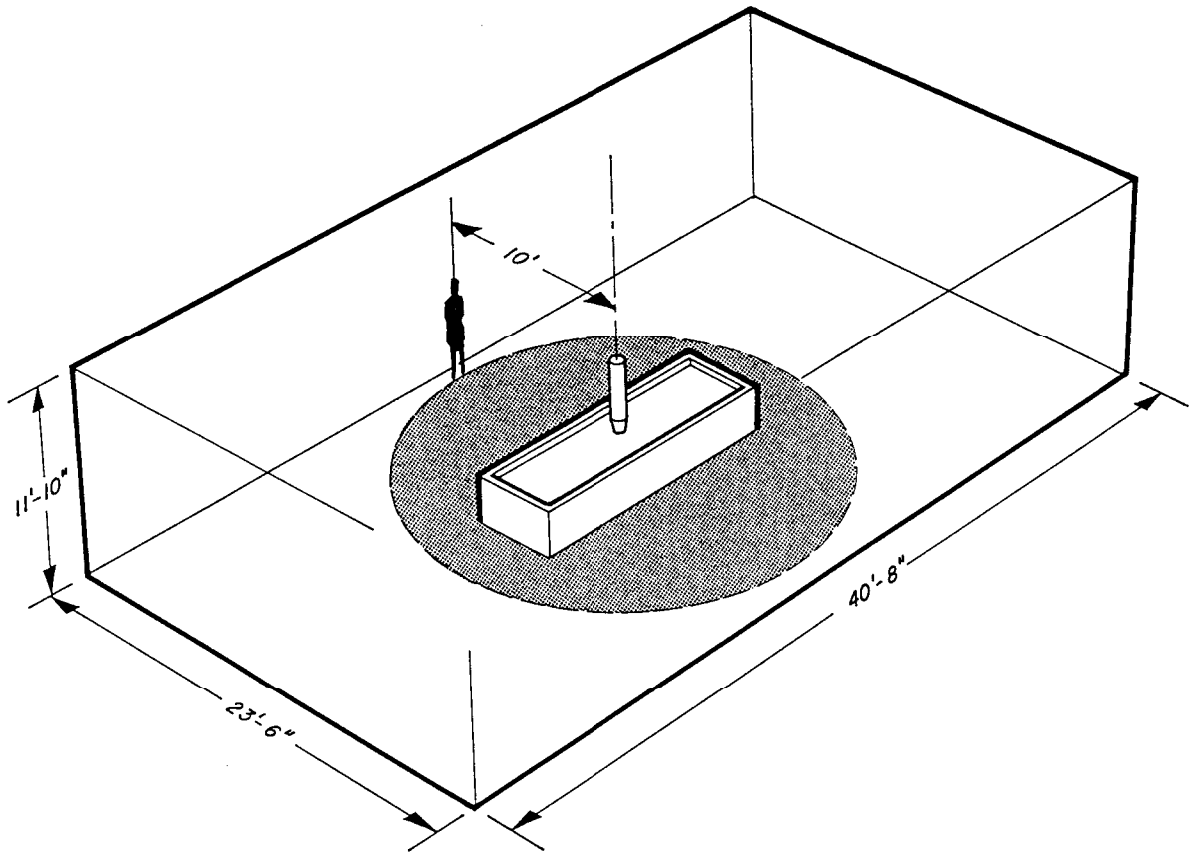

Figure 6-6 Noise Levels (Decibels)

Daily Start-Up

Prior to start-up, ensure that your cutting environment and that your clothing meet the safety requirements outlined in the *Safety* section of this manual. If problems occur during start-up, refer to **Section 5** for the system checkout requirements.

WARNING

Before operating this system, you must read the Safety section thoroughly! Turn main disconnect switch to the HT2000 power supply OFF before proceeding with the following steps

Note: For operation with argon-hydrogen manifold, see ***Section 7 Operation: Argon-Hydrogen Manifold***

Check Torch

1. Remove the consumables from the torch and check for worn or damaged parts. **Always place the consumables on a clean, dry, oil free surface after removing. Dirty consumables can cause the torch to malfunction.**

   - Check the pit depth of the electrode using the electrode gauge assembly. An all copper electrode should be replaced when the depth exceeds .040 inch (1 mm). A SilverPlus electrode should be replaced when the pit depth exceeds approximately two times the recommended depth of an all copper electrode.

   - Wipe the current ring in the torch with a clean paper towel or Q-tip (see Figure 6-7).

   - Refer to the *Cut Charts* in this section to choose the correct consumables for your cutting needs.

2. Replace consumable parts. Refer to the *Changing Consumable Parts* section later in this manual for detailed information on replacing consumables.

3. Ensure that the torch is squared to the material. Refer to **Section 4**: Installation for the torch alignment procedure.

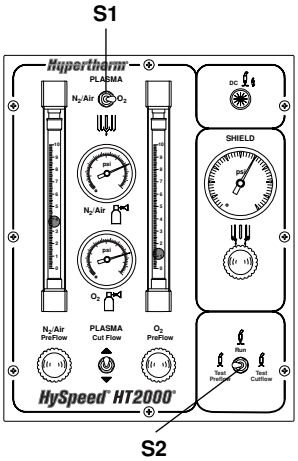

Turn Gases On

4. Set **S2** toggle switch on the gas console to **Run.**

5. Set **S1** on the gas console to **N_2/Air** (for nitrogen or air as plasma gas), or **O_2** (for oxygen as plasma gas).

6. Turn the required supply gases **On.**

- When using **oxygen, nitrogen, or argon-hydrogen** as the **plasma gas**, adjust supply regulator to read **120 psi +/- 10 psi (8.2 bar +/- 0.7 bar)**.

  When using **air** as the **plasma gas**, adjust supply regulator to read **90 psi +/- 10 psi (6.2 bar +/- 0.7 bar**).

- Adjust supply regulator for **shield gas** to read **90 psi +/- 10 psi (6.2 bar +/- 0.7 bar)**.

Turn Power Supply On and Adjust Voltage/Current

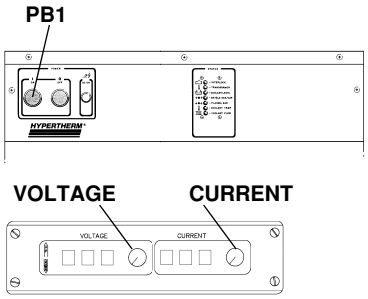

7. Turn main disconnect switch ON. See *Status Indicators Before Startup* earlier in this section.

8. Turn on the power supply by depressing the **POWER ON (1)** button (**PB1**) on the HT2000 power supply. Ensure that the green **POWER ON** indicator illuminates. Hold PB1 down until all of the status indicators extinguish. If the **POWER ON** light fails to come on, see **Section 4**: Installation for proper setup.

9. Set the **VOLTAGE** and **CURRENT** on the DR V/C module. Select the arc current and arc voltage from the *Cut Charts* in this section for the type and thickness of metal to be test cut.

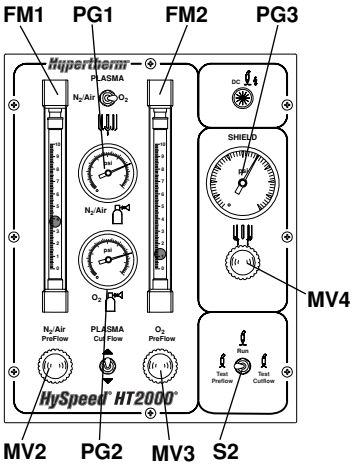

Adjust Preflow Gases

10. Set **S2** on the gas console to **Test Preflow.** Verify that the plasma gas pressure gauges (**PG1, PG2**) on the gas console both read 120 psi (8.2 bar).

11. Look at the oxygen (**FM2**) and/or nitrogen-air (**FM1**) flowmeters on the gas console and set the **Preflow** plasma gas flow rate % by referring to the *Cut Charts* and turning the oxygen (**MV3**) and/or nitrogen- air (**MV2**) preflow flowmeter adjust knobs.

12. Look at the shield gas pressure gauge (**PG3**) on the gas console, and set to the *Cut Chart* specifications by turning the shield gas adjust knob (**MV4**).

    Note: If you have changed consumable parts or if the power supply has been off for more than one hour, purge gas lines by leaving system in **Test Preflow** for one minute.

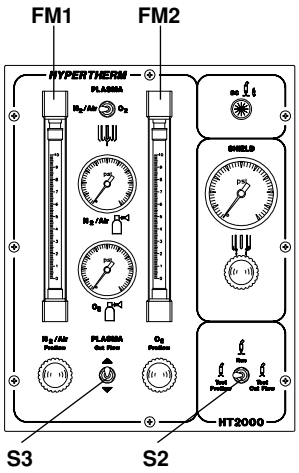

Adjust Cut Flow Gases and Prepare for Cutting

13. Set **S2** on the gas console to **Test Cut Flow.**

14. Look at the oxygen (**FM2**) and/or nitrogen-air (**FM1**) flowmeters on the gas console and set the **Cut Flow** plasma gas flow rate % by referring to the *Cut Charts* and toggling the **Cut Flow** switch (**S3**) up or down.

    Note: If you have changed consumable parts or if the power supply has been off for more than one hour, purge gas lines by leaving system in **Test Cut Flow** for one minute.

15. Set **S2** to **Run** after the test preflow and test operate flow rates have been set.

The system is now ready for operation.

Common Cutting Faults

- Torch pilot arc will initiate, but will not transfer. Cause can be:

  1. Work cable connection on cutting table not making good contact.

  2. Malfunction in system. See **Section 8**.

- The workpiece is not totally penetrated, and there is excessive sparking on top of the workpiece. Causes can be:

  1. Current is set too low (check *Cut Chart* information).

  2. Cut speed is too high (check *Cut Chart* information).

  3. Torch parts are worn (see *Changing Consumable Parts*).

  4. Metal being cut is too thick.

- Dross forms on the bottom of the cut. Causes can be:

  1. Cutting speed is too slow or too fast (check *Cut Chart* information).

  2. Arc current set too low (check *Cut Chart* information).

  3. Torch parts are worn (see *Changing Consumable Parts*).

- Cut angle not square. Causes can be:

  1. Wrong direction of machine travel.

     High quality side is on the <u>right</u> with respect to the forward motion of the torch.

2. Torch-to-work distance is not correct (check *Cut Chart* information).

3. Cutting speed is not correct (check *Cut Chart* information).

4. Arc current is not correct (check *Cut Chart* information).

5. Damaged consumable parts (see *Changing Consumable Parts*).

- Short consumable life. Causes can be:

1. Arc current, arc voltage, travel speed, motion delay, gas flow rates, or initial torch height not set as specified in *Cut Charts*.

2. Attempting to cut highly magnetic metal plate (some metals such as armor plate with a high nickel content) will shorten consumable life. Long consumable life is difficult to achieve when cutting plate that is magnetized or becomes magnetized easily. Call Hypertherm's Technical Service (1-800-643-9878) if you suspect the type of metal you are cutting is causing shortened consumable life.

3. Not beginning or ending cut on plate.

Also see *Cutting Techniques* later in this section for methods to improve cutting performance.

Technical Questions

Claims for defective merchandise – All units shipped from Hypertherm undergo rigorous quality control testing. However, if your system does not function correctly:

1. Recheck all pre-installation and installation requirements and connections.

2. If you are unable to solve the problem, call your distributor. He (she) will be able to help you, or refer you to an authorized Hypertherm repair facility.

3. If you need assistance, call Hypertherm's Technical Service department at 1-800-643-9878.

Cut Charts

The Cut Charts on the following pages provide the necessary information in order for the operator using the system to be successful in plasma arc cutting. The HT2000 provides a wide travel speed operating window: usually ± 10 ipm (± 254mm/min) on most materials. The data listed in the charts are for making drop cuts with minimal dross.

Caution:	**Before cutting, check all settings and adjustments and check for damaged torch parts and worn consumable parts.**

Conversions

1 inch = 25.4 mm; 1 scfh = 28.316 liter/hour; 1 psi = .0689 bar = 6.895 KPa

CUT CHART AND CONSUMABLE PARTS INDEX

Metal		Amps	Plasma Gas/ Shield Gas	Shield	Retaining Cap	Nozzle	Swirl Ring	Electrode	Page
CUTTING	Mild Steel	200	HySpeed O_2 / Air	220239	220242	220237	220236	220235	6-14
		200	O_2 / Air	020424	120837	020605	120833	120667	6-15
		200	Air / Air	020424	120837	020608	020679	120667	6-16
		200	N_2 / CO_2	020424	120837	020608	020607	020415	6-17
		100	Air / Air	020448	120837	020611	020607	120547	6-18
		100	O_2 / Air	020424	120837	020690	020613	120547	6-19
		50	O_2 / O_2	120186	120185	120182	120179	120178	6-20
	Stainless Steel	200	Air / Air	020424	120837	020608	020679	120667	6-21
		200	N_2 / Air	020424	120837	020608	020607	020415	6-22
		200	N_2 / CO_2	020424	120837	020608	020607	020415	6-23
		200	H35 / N_2*	020602	120837	020608	020607	020415	6-24
		100	Air / Air	020448	120837	020611	020607	120547	6-25
		100	H35 / N_2*	020448	120837	020611	020607	020415	6-26
		40	Air / Air	020688	020423	020689	020613	120667	6-27
	Aluminum	200	Air / Air	020424	120837	020608	020679	120667	6-28
		200	N_2 / Air	020424	120837	020608	020607	020415	6-29
		200	N_2 / CO_2	020424	120837	020608	020607	020415	6-30
		200	H35 / N_2*	020602	120837	020608	020607	020415	6-31
		100	Air / Air	020448	120837	020611	020607	120547	6-32
		100	H35 / N_2*	020448	120837	020611	020607	020415	6-33
		40	Air / Air	020688	020423	020689	020613	120667	6-34
BEVEL CUTTING	Mild Steel	200	O_2/Air	120260	120837	120259	120833	120258	6-35
GOUGING	Mild Steel	200	Air / Air	020485	120837	020615	020607	120667	6-36
	Stainless Steel	200	H35 / N_2*	020485	120837	020615	020607	020415	6-36
	Aluminum	200	H35 / N_2*	020485	120837	020615	020607	020415	6-36

*** Argon-Hydrogen Manifold required. See Section 7 for installation and operation with argon-hydrogen manifold.**

Consumables used with Hyspeed HT2000 Water Muffler**	200	HySpeed O_2 / Air	220239	220238	220237	220236	220235
	200	O_2 / Air	**020566**	020423	020605	120833	120667
	100	O_2 / Air	**020566**	020423	020690	020613	120547
	200	Air / Air	**020566**	020423	020608	020679	120667
	100	Air / Air	**020618**	020423	020611	020607	120547
	200	N_2 / CO_2	**020566**	020423	020608	020607	020415
	200	N_2 / Air	**020566**	020423	020608	020607	020415

**** Do not use the water muffler when cutting with argon-hydrogen (H35)!**
Water Muffler cannot be used with the stainless steel torch

Note: If the Command THC or other ohmic contact sensing device is NOT in use, retaining caps with no IHS tab: **020423** clockwise**; 020955** counterclockwise can be used for all cutting currents except 50A**; 120185** for 50A cutting only**.** For Hyspeed 200A O_2 cutting only; Use retaining cap part # 220238 (clockwise cutting) & 220241 (counter-clockwise cutting).

Mild Steel

HySpeed 200 amps • O_2 Plasma / Air Shield

This gas combination gives superior cut speed, minimum dross, minimum surface nitriding and excellent weldability.

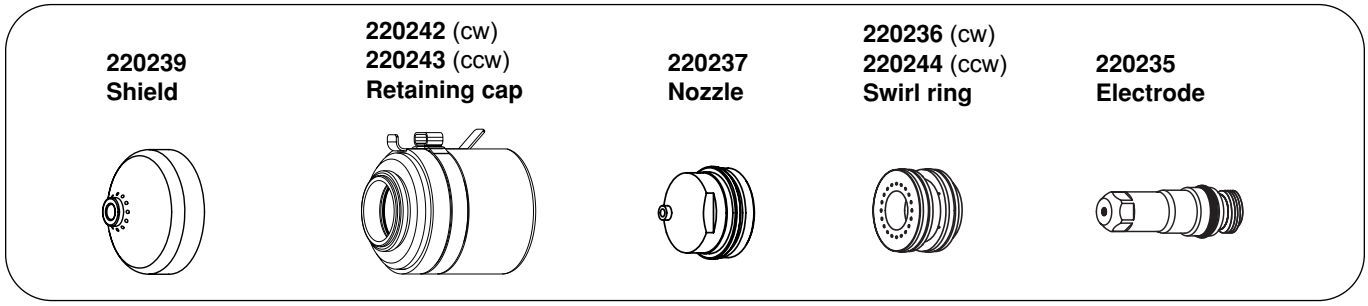

Above Water

Material Thickness (inches)	(mm)	Plasma Gas Flow Rate % Preflow (O_2 % N_2 %)	Cutflow (O_2 % N_2 %)	Shield Gas (Air) Pressure (psi)	Torch-to-work Distance (inches)	(mm)	Initial Torch Piercing Height (inches)	(mm)	Arc Voltage Setting (volts)	Travel Speed (ipm)	(mm/min.)	Approx. Motion Delay Time (sec)
1/4	6	**5 45**	**76 0**	**60**	1/16	1.5	1/8	3	145	230	5800	0.3
5/16	8	(12 / 50	(90 / 0	(275	1/8	3	1/4	6	151	165	4200	0.3
3/8	10	SCFH)	SCFH)	SCFH)	5/32	4	5/16	8	155	140	3500	0.3
1/2	12				1/8	3	1/4	6	155	120	3000	0.3
5/8	15				1/8	3	1/4	6	155	100	2500	0.5
3/4	20				1/8	3	1/4	6	155	75	1900	0.6
7/8	22				1/8	3	1/4	6	159	60	1500	0.7
1	25				1/8	3	1/4	6	160	50	1300	0.7
1 1/4	32				1/8	3	5/16	8	168	30	760	2.6
1-1/2	38				1/8	3	5/16	8	175	20	500	4.0
1-3/4	44				1/8	3	N/A	N/A	180	15	380	N/A
2	50				1/8	3	N/A	N/A	188	10	250	N/A

3" Under Water

Material Thickness (inches)	(mm)	Plasma Gas Flow Rate % Preflow (O_2 % N_2 %)	Cutflow (O_2 % N_2 %)	Shield Gas (Air) Pressure (psi)	Torch-to-work Distance (inches)	(mm)	Initial Torch Piercing Height (inches)	(mm)	Arc Voltage Setting (volts)	Travel Speed (ipm)	(mm/min.)	Approx. Motion Delay Time (sec)
1/4	6	**12 38**	**76 0**	**60**	1/16	1.5	1/8	3	149	230	5800	0.3
5/16	8	(12 / 50	(90 / 0	(275	1/8	3	1/4	6	151	165	4200	0.3
3/8	10	SCFH)	SCFH)	SCFH)	5/32	4	5/16	8	159	140	3500	0.3
1/2	12				1/8	3	1/4	6	155	105	2700	0.3
5/8	15				1/8	3	1/4	6	161	90	2300	0.5
3/4	20				1/8	3	1/4	6	161	65	1600	0.6
7/8	22				1/8	3	1/4	6	161	55	1400	0.7
1	25				1/8	3	1/4	6	164	45	1100	0.7

Notes: **Set oxygen plasma gas inlet pressure to 120 psi (8.3 bar).**
Set nitrogen plasma gas inlet pressure to 120 psi (8.3 bar)
Set shield gas inlet pressure to 90 psi (6.2 bar)
Production cutting above 1" (25 mm) not recommended.
Drop cutting above 1-1/2" (38 mm) not recommended

Mild Steel

200 amps • O_2 Plasma / Air Shield

This gas combination gives superior cut speed, minimum dross, minimum surface nitriding and excellent weldability.

020424
Shield

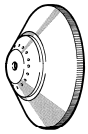

120837 (cw)
120838 (ccw)
Retaining cap

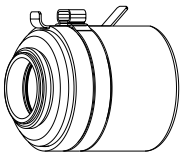

020605
Nozzle

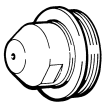

120833* (cw)
120834 (ccw)
Swirl ring

120667 (standard)
Electrode
220084 (optional)
SilverPlus electrode+

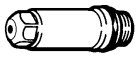

Above Water

Material Thickness (inches)	(mm)	Plasma Gas Flow Rate % Preflow (O_2 % N_2 %)	Plasma Gas Flow Rate % Cutflow (O_2 % N_2 %)	Shield Gas (Air) Pressure (psi)	Torch-to-work Distance (inches)	(mm)	Initial Torch Piercing Height (inches)	(mm)	Arc Voltage Setting (volts)	Travel Speed (ipm)	(mm/min.)	Approx. Motion Delay Time (sec)
1/4	6	**5 45**	**64 0**	**60**	1/8	3	1/4	6	120	160	4060	0.5
.315	8	(5.3 / 62.4	(79.6 / 0	(270	1/8	3	1/4	6	125	120	3000	0.5
3/8	10	SCFH)	SCFH)	SCFH)	1/8	3	1/4	6	125	100	2540	1.0
1/2	12				.157	4	.314	8	125	80	2030	2.0
5/8	15				.157	4	.314	8	130	70	1780	2.0
3/4	20				3/16	5	3/8	10	135	55	1400	2.5
7/8	22				1/4	6	1/2	12	135	45	1140	2.5
1	25				1/4	6	1/2	12	140	35	890	2.5
1 1/4	32				1/4	6			150	22	560	
1-1/2	38				1/4	6			155	15	380	
1-3/4	44				5/16	8			165	10	250	
2	50				5/16	8			170	7	180	

3" Under Water

Material Thickness (inches)	(mm)	Plasma Gas Flow Rate % Preflow (O_2 % N_2 %)	Plasma Gas Flow Rate % Cutflow (O_2 % N_2 %)	Shield Gas (Air) Pressure (psi)	Torch-to-work Distance (inches)	(mm)	Initial Torch Piercing Height (inches)	(mm)	Arc Voltage Setting (volts)	Travel Speed (ipm)	(mm/min.)	Approx. Motion Delay Time (sec)
1/4	6	**5 45**	**64 0**	**70**	1/8	3	1/4	6	125	145	3700	0.5
.315	8	(5.3 / 62.4	(79.6 / 0	(270	1/8	3	1/4	6	125	110	2800	0.5
3/8	10	SCFH)	SCFH)	SCFH)	1/8	3	1/4	6	130	80	2000	1.0
1/2	12				1/8	3	1/4	6	130	70	1800	2.0
5/8	15				.157	4	.314	8	135	60	1500	2.0
3/4	20				3/16	5	3/8	10	140	48	1200	2.5
7/8	22				1/4	6	1/2	12	140	38	950	3.0
1	25				1/4	6	1/2	12	145	25	680	3.0

Notes: **Set oxygen plasma gas inlet pressure to 120 psi (8.3 bar).**
Set nitrogen plasma gas inlet pressure to 120 psi (8.3 bar)
Set shield gas inlet pressure to 90 psi (6.2 bar)
Production cutting above 1" (25 mm) not recommended. Drop cutting above 1-1/2" (38 mm) not recommended
*** Use 020679 swirl ring in place of 120833 swirl ring to obtain smoother cut edges on material 1/4" to 3/8" thick, but expect a 30-40% decrease in electrode life**
+ SilverPlus provides increased life to high duty cycle users in most applications. The hafnium wears to approximately twice the depth of an all copper electrode (120667). Arc voltage may need to be increased by 5-10 volts throughout the electrode life to maintain proper cut height parameters.

Mild Steel

200 amps • Air Plasma / Air Shield

This gas combination gives good cut speed, low dross levels and is very economical. Some surface nitriding can occur.

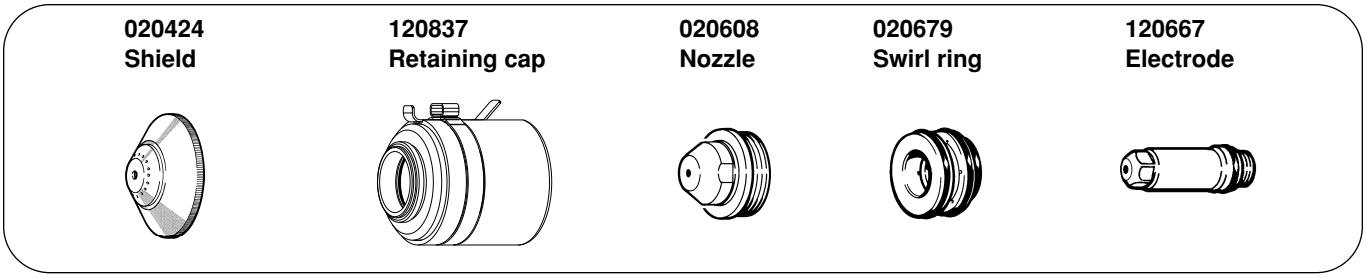

Above Water

Material Thickness (inches)	(mm)	Plasma Gas Flow Rate % Preflow (Air %)	Cutflow (Air %)	Shield Gas (Air) Pressure (psi)	Torch-to-work Distance (inches)	(mm)	Initial Torch Piercing Height (inches)	(mm)	Arc Voltage Setting (volts)	Travel Speed (ipm)	(mm/min.)	Approx. Motion Delay Time (sec)
3/16	5	**54**	**65**	**60**	1/8	3	1/4	6	130	200	5080	
1/4	6	(62.3	(75.0	(270	1/8	3	1/4	6	130	135	3400	0.5
.315	8	SCFH)	SCFH)	SCFH)	1/8	3	1/4	6	135	115	2900	0.5
3/8	10				1/8	3	1/4	6	135	100	2540	1.0
1/2	12				.157	4	.314	8	140	80	2030	2.0
5/8	15				.157	4	.314	8	145	60	1520	2.0
3/4	20				3/16	5	3/8	10	150	45	1140	2.5
7/8	22				1/4	6	1/2	12	155	30	760	2.5
1	25				1/4	6	1/2	12	160	25	635	2.5
1-1/4	32				1/4	6			165	15	380	
1-1/2	38				1/4	6			170	10	250	
1-3/4	44				5/16	8			180	7	180	
2	50				5/16	8			185	5	130	

3" Under Water

Material Thickness (inches)	(mm)	Plasma Gas Flow Rate % Preflow (Air %)	Cutflow (Air %)	Shield Gas (Air) Pressure (psi)	Torch-to-work Distance (inches)	(mm)	Initial Torch Piercing Height (inches)	(mm)	Arc Voltage Setting (volts)	Travel Speed (ipm)	(mm/min.)	Approx. Motion Delay Time (sec)
1/4	6	**54**	**65**	**70**	1/8	3	1/4	6	130	130	3300	0.5
.315	8	(62.3	(75.0	(280	1/8	3	1/4	6	135	110	2700	0.5
3/8	10	SCFH)	SCFH)	SCFH)	1/8	3	1/4	6	135	95	2400	1.0
1/2	12				1/8	3	1/4	6	140	75	1900	2.0
5/8	15				.157	4	.314	8	145	50	1200	2.0
3/4	20				3/16	5	3/8	10	150	35	850	2.5
7/8	22				1/4	6	1/2	12	155	20	530	3.0
1	25				1/4	6	1/2	12	165	15	400	3.0

Notes: **Set plasma gas inlet pressure to 90 psi (6.2 bar)**
Set shield gas inlet pressure to 90 psi (6.2 bar)
Production cutting above 1" (25 mm) not recommended
Drop cutting above 1-1/2" (38 mm) not recommended

Mild Steel

200 amps • N_2 Plasma / CO_2 Shield

This gas combination may be used when cut edge quality and surface nitriding are less important. Electrode life is extended when using this combination.

020424
Shield

120837
Retaining cap

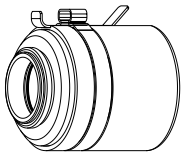

020608
Nozzle

020607
Swirl ring

020415
Electrode

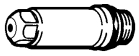

Above Water Only

Material Thickness (inches)	(mm)	Plasma Gas Flow Rate % Preflow (N_2 %)	Cutflow (N_2 %)	Shield Gas (CO_2) Pressure (psi)	Torch-to-work Distance (inches)	(mm)	Initial Torch Piercing Height (inches)	(mm)	Arc Voltage Setting (volts)	Travel Speed (ipm)	(mm/min.)	Approx. Motion Delay Time (sec)
3/16	5	**50**	**60**	**60/4**	1/8	3	1/4	6	120	130	3300	0.5
1/4	6	(62.3	(75.0	(270	1/8	3	1/4	6	125	110	2800	1.0
3/8	10	(SCFH)	SCFH)	SCFH)	1/8	3	1/4	6	130	85	2160	1.5
1/2	12				1/8	3	1/4	6	130	55	1400	2.0
5/8	15				.157	4	.314	8	135	45	1140	2.0
3/4	20				3/16	5	3/8	10	145	25	635	2.5
7/8	22				1/4	6	1/2	12	150	20	510	3.0
1	25				1/4	6	1/2	12	160	15	380	3.0
1-1/4	32				1/4	6			165	10	250	
1-1/2	38				1/4	6			175	5	130	

Notes: **Set plasma gas inlet pressure to 120 psi (8.3 bar)**
Set shield gas inlet pressure to 90 psi (6.2 bar)
Production cutting above 1" (25 mm) not recommended

Mild Steel

100* amps • Air Plasma / Air Shield

This gas combination gives good cut speed, low dross levels and is very economical. Some surface nitriding can occur. While this process may be used on thicker materials, optimal recommended range is to 3/8" (10mm).

020448
Shield

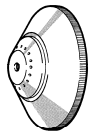

120837
Retaining cap

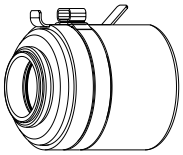

020611
Nozzle

020607
Swirl ring

120547
Electrode

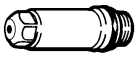

Above Water

Material Thickness (inches)	(mm)	Plasma Gas Flow Rate % Preflow (Air %)	Cutflow (Air %)	Shield Gas (Air) Pressure (psi)	Torch-to-work Distance (inches)	(mm)	Initial Torch Piercing Height (inches)	(mm)	Arc Voltage Setting (volts)	Travel Speed (ipm)	(mm/min.)	Approx. Motion Delay Time (sec)
.075*	2	**48**	**39**	**60**	3/32	2.5	3/16	5	120	235	6050	
1/8	3	(55.3	(44.9	(270	3/32	2.5	3/16	5	125	185	4700	0.5
3/16	5	SCFH)	SCFH)	SCFH)	1/8	3	1/4	6	125	175	4450	0.5
1/4	6				1/8	3	1/4	6	130	125	3175	0.5
3/8	10				1/8	3	1/4	6	135	50	1270	1.0
1/2	12				1/8	3			140	35	890	
5/8	15				.157	4			145	25	635	
3/4	20				3/16	5			150	20	510	

3" Under Water

Material Thickness (inches)	(mm)	Plasma Gas Flow Rate % Preflow (Air %)	Cutflow (Air %)	Shield Gas (Air) Pressure (psi)	Torch-to-work Distance (inches)	(mm)	Initial Torch Piercing Height (inches)	(mm)	Arc Voltage Setting (volts)	Travel Speed (ipm)	(mm/min.)	Approx. Motion Delay Time (sec)
1/8	3	**48**	**39**	**70**	5/64	2	5/32	4	130	120	3050	
3/16	5	(55.3	(44.9	(270	1/8	3	1/4	6	135	90	2300	0.5
1/4	6	SCFH)	SCFH)	SCFH)	1/8	3	1/4	6	140	70	1730	0.5
3/8	10				1/8	3	1/4	6	145	42	1050	0.5
1/2	12				1/8				145	28	700	

* Set arc current to **80 amps** when cutting .075" (2 mm) thick mild steel

Notes: **Set plasma gas inlet pressure to 90 psi (6.2 bar)**
Set shield gas inlet pressure to 90 psi (6.2 bar)
Production cutting above 3/8" (10 mm) not recommended

Mild Steel

100 amps • O_2 Plasma / Air Shield

This gas combination gives good cut speed, low dross and is very economical. Some surface nitriding can occur. While this process may be used on thicker materials, optimal recommended range is to 3/8" (10mm).

020424
Shield

120837 (cw)
120838 (ccw)
Retaining cap

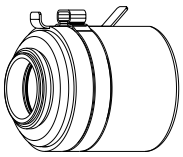

020690
Nozzle

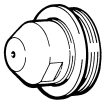

020613 (cw)
120252 (ccw)
Swirl ring

120547*
Electrode

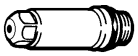

Above Water

Material Thickness (inches)	(mm)	Plasma Gas Flow Rate % Preflow (O_2 % N_2 %)	Plasma Gas Flow Rate % Cutflow (O_2 % N_2 %)	Shield Gas (Air) Pressure (psi)	Torch-to-work Distance (inches)	(mm)	Initial Torch Piercing Height (inches)	(mm)	Arc Voltage Setting (volts)	Travel Speed (ipm)	(mm/min.)	Approx. Motion Delay Time (sec)
1/8	3	**3 32**	**36 0**	**60**	3/32	2.5	3/16	5	125	240	6100	
3/16	5	(3.3 / 39.6	(45 / 0	(270	1/8	3	1/4	6	125	180	4570	
1/4	6	SCFH)	SCFH)	SCFH)	1/8	3	1/4	6	125	120	3050	0.5
3/8	10				1/8	3	1/4	6	130	90	2280	0.5
1/2	12				1/8	3			130	60	1520	
5/8	15				.157	4			140	45	1140	
3/4	20				3/16	5			145	30	760	

3" Under Water

Material Thickness (inches)	(mm)	Plasma Gas Flow Rate % Preflow (O_2 % N_2 %)	Plasma Gas Flow Rate % Cutflow (O_2 % N_2 %)	Shield Gas (Air) Pressure (psi)	Torch-to-work Distance (inches)	(mm)	Initial Torch Piercing Height (inches)	(mm)	Arc Voltage Setting (volts)	Travel Speed (ipm)	(mm/min.)	Approx. Motion Delay Time (sec)
1/8	3	**3 28**	**36 0**	**60**	5/64	2	5/32	4	125	220	5580	
3/16	5	(3.3 / 39.6	(45 / 0	(270	1/8	3	1/4	6	125	160	4060	0.5
1/4	6	SCFH)	SCFH)	SCFH)	1/8	3	1/4	6	125	110	2790	0.5
3/8	10				1/8	3	1/4	6	130	85	2160	0.5
1/2	12				1/8	3			135	60	1520	

Notes: **Set oxygen plasma gas inlet pressure to 120 psi (8.3 bar)**
Set nitrogen plasma gas inlet pressure to 120 psi (8.3 bar)
Set shield gas inlet pressure to 90 psi (6.2 bar)
Production cutting above 3/8" (10 mm) not recommended
* To maximize consumable life, modify the part lead-in and lead-out to reduce ramp-down errors.
For strip cutting or other applications where proper ramp-down is difficult to achieve, use electrode P/N 120667 in place of electrode P/N120547.

Mild Steel

50 amps • O_2 Plasma / O_2 Shield

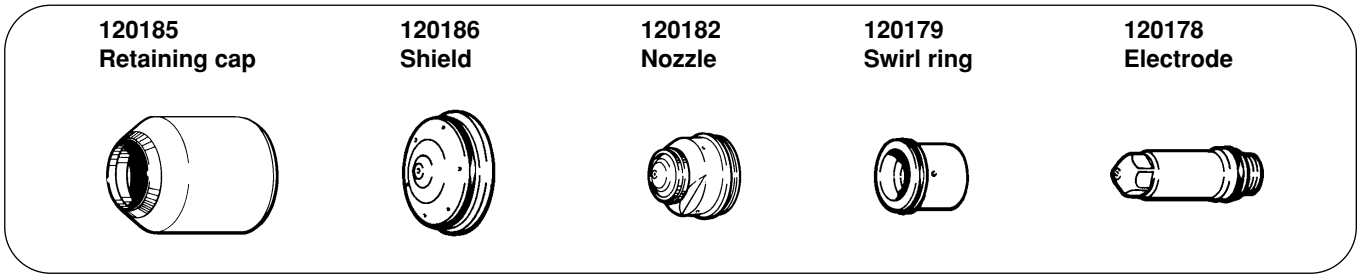

Above Water Only

Material Thickness (inches)	(mm)	Plasma Gas Flow Rate % Preflow (O_2 % N_2 %)	Cutflow (O_2 % N_2 %)	Shield Gas (O_2) Pressure (psi)	Torch-to-work Distance (inches)	(mm)	Initial Torch Piercing Height (inches)	(mm)	Arc Voltage Setting (volts)	Travel Speed (ipm)	(mm/min.)	Approx. Motion Delay Time (sec)
.048	(18 GA.)	**3 27**	**30 0**	**18**	.060	1.50	.120	3.0	108	160	4060	0
.074	(14 GA.)	2 / 17	18 / 0	17	.060	1.50	.120	3.0	108	120	3050	0.3
.100	(12 GA.)	l/min	l/min	l/min	.070	1.75	.140	3.5	113	100	2540	0.3
.125	(10 GA.)				.080	2.00	.160	4.0	118	60	1520	0.5

Notes: **Set oxygen plasma gas inlet pressure to 120 psi (8.3 bar)**
Set nitrogen plasma gas inlet pressure to 120 psi (8.3 bar)
Set shield gas inlet pressure to 120 psi (8.3 bar)
The oxygen shield gas must be supplied from a regulator separate from the oxygen plasma gas regulator.
If using the Digital Remote (DR) or Programmable Remote (PR), set current to 60 amps.
If using a torch height control system capable of achieving the arc voltage setting on this chart, set accordingly.
If using a less sensitive torch height control system, round off the arc voltage numbers to the nearest achievable setting.
Torch-to-work Distance tolerances are ± .010 inch (± .25 mm). When using a THC the tolerances are ± 1 volt.
Stay within travel speed ranges to produce dross-free cuts.
Due to the low gas flow rates associated with the 50 amp process, initial cut quality may be degraded while nitrogen is being purged from the gas line when changing from preflow to cut flow (up to 2 seconds). To compensate, either increase machine motion delay or increase the lead-in distance at the start of the cut.
Note that some height control systems may need to be locked out to prevent the torch from diving into the plate if the machine motion delay option is used.

Stainless Steel

200 amps • Air Plasma / Air Shield

This gas combination gives good cut speed, low dross and is very economical. Some surface nitriding and surface oxidation of alloying elements can occur.

020424
Shield

120837
Retaining cap

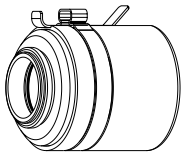

020608
Nozzle

020679
Swirl ring

120667
Electrode

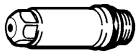

Above Water

Material Thickness (inches)	(mm)	Plasma Gas Flow Rate % Preflow (Air %)	Cutflow (Air %)	Shield Gas (Air) Pressure (psi)	Torch-to-work Distance (inches)	(mm)	Initial Torch Piercing Height (inches)	(mm)	Arc Voltage Setting (volts)	Travel Speed (ipm)	(mm/min.)	Approx. Motion Delay Time (sec)
3/16	5	**54**	**65**	**60**	1/8	3	1/4	5	125	220	5600	
1/4	6	(62.3	(75.0	(270	1/8	3	1/4	6	130	195	5000	0.5
3/8	10	SCFH)	SCFH)	SCFH)	1/8	3	1/4	6	130	145	3700	1.0
1/2	12				1/8	3	1/4	6	135	105	2700	2.0
5/8	15				.157	4	.314	8	140	75	1900	2.0
3/4	20				3/16	5	3/8	10	140	55	1400	2.5
7/8	22				1/4	6	1/2	12	145	40	1000	3.0
1	25				1/4	6			150	30	760	
1-1/4	32	`			1/4	6			160	15	380	
1-1/2	38				1/4	6			170	10	250	

3" Under Water

Material Thickness (inches)	(mm)	Plasma Gas Flow Rate % Preflow (Air %)	Cutflow (Air %)	Shield Gas (Air) Pressure (psi)	Torch-to-work Distance (inches)	(mm)	Initial Torch Piercing Height (inches)	(mm)	Arc Voltage Setting (volts)	Travel Speed (ipm)	(mm/min.)	Approx. Motion Delay Time (sec)
3/16	5	**54**	**65**	**70**	1/8	3	1/4	6	125	210	5320	
1/4	6	(62.3	(75.0	(280	1/8	3	1/4	6	130	180	4500	0.5
3/8	10	SCFH)	SCFH)	SCFH)	1/8	3	1/4	6	135	125	3150	1.0
1/2	12				1/8	3	1/4	6	140	90	2300	2.0
5/8	15				.157	4	.314	8	145	60	1520	2.0
3/4	20				3/16	5	3/8	10	145	45	1150	2.5
7/8	22				1/4	6	1/2	12	150	30	750	3.0
1	25				1/4	6			155	22	570	

Notes: **Set air plasma gas inlet pressure to 90 psi (6.2 bar)**
Set air shield gas inlet pressure to 90 psi (6.2 bar)
Production cutting above 7/8" (22 mm) not recommended

Stainless Steel

200 amps • N_2 Plasma / Air Shield

This gas combination is used when cut edge quality, surface nitriding and surface oxidation of alloying elements are less important. Electrode life is extended when this combination is used.

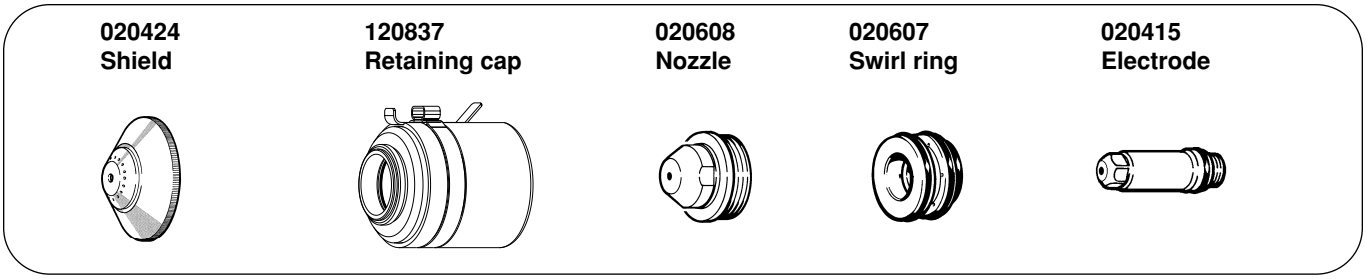

Above Water

Material Thickness (inches)	(mm)	Plasma Gas Flow Rate % Preflow (N_2 %)	Cutflow (N_2 %)	Shield Gas (Air) Pressure (psi)	Torch-to-work Distance (inches)	(mm)	Initial Torch Piercing Height (inches)	(mm)	Arc Voltage Setting (volts)	Travel Speed (ipm)	(mm/min.)	Approx. Motion Delay Time (sec)
3/16	5	**50**	**60**	**60**	1/8	3	1/4	5	125	135	3430	
1/4	6	(66.4	(79.6	(270	1/8	3	1/4	6	130	120	3050	0.5
3/8	10	SCFH)	SCFH)	SCFH)	1/8	3	1/4	6	130	100	2540	1.0
1/2	12				1/8	3	1/4	6	135	75	1900	2.0
5/8	15				.157	4	.314	8	140	60	1520	2.0
3/4	20				3/16	5	3/8	10	140	45	1140	2.5
7/8	22				1/4	6	1/2	12	145	35	890	2.5
1	25				1/4	6			150	20	510	
1-1/4	32	`			1/4	6			160	15	380	
1-1/2	38				1/4	6			160	10	250	

3" Under Water

Material Thickness (inches)	(mm)	Plasma Gas Flow Rate % Preflow (N_2 %)	Cutflow (N_2 %)	Shield Gas (Air) Pressure (psi)	Torch-to-work Distance (inches)	(mm)	Initial Torch Piercing Height (inches)	(mm)	Arc Voltage Setting (volts)	Travel Speed (ipm)	(mm/min.)	Approx. Motion Delay Time (sec)
3/16	5	**50**	**60**	**70**	1/8	3	1/4	6	125	130	3250	
1/4	6	(66.4	(79.6	(280	1/8	3	1/4	6	130	110	2750	0.5
3/8	10	SCFH)	SCFH)	SCFH)	1/8	3	1/4	6	135	85	2160	1.0
1/2	12				1/8	3	1/4	6	140	60	1520	2.0
5/8	15				.157	4	.314	8	145	45	1140	2.0
3/4	20				3/16	5	3/8	10	145	30	800	2.5

Notes: **Set nitrogen plasma gas inlet pressure to 120 psi (8.3 bar)**
Set air shield gas inlet pressure to 90 psi (6.2 bar)
Production cutting above 7/8" (22 mm) not recommended

Stainless Steel

200 amps • N_2 Plasma / CO_2 Shield

This gas combination is used when surface nitriding and surface oxidation of alloying elements is less important. Electrode life is extended when using this gas combination.

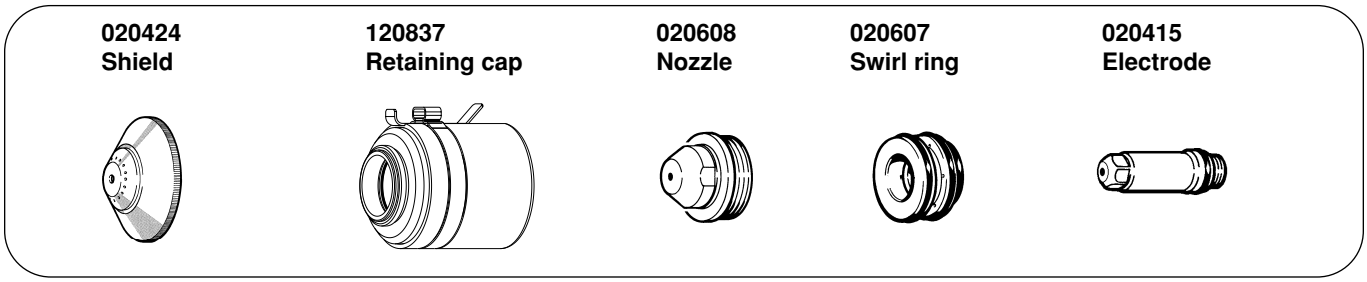

Above Water

Material Thickness (inches)	(mm)	Plasma Gas Flow Rate % Preflow (N_2 %)	Cutflow (N_2 %)	Shield Gas (CO_2) Pressure (psi)	Torch-to-work Distance (inches)	(mm)	Initial Torch Piercing Height (inches)	(mm)	Arc Voltage Setting (volts)	Travel Speed (ipm)	(mm/min.)	Approx. Motion Delay Time (sec)
3/16	5	**50**	**60**	**60**	1/8	3	1/4	6	125	190	4800	0.5
1/4	6	(66.4	(79.6	(210	1/8	3	1/4	6	130	170	4300	1.0
3/8	10	SCFH)	SCFH)	SCFH)	1/8	3	1/4	6	130	125	3200	1.5
1/2	12				1/8	3	1/4	6	135	95	2400	2.0
5/8	15				.157	4	.314	8	140	70	1800	2.0
3/4	20				3/16	5	3/8	10	140	50	1250	2.5
7/8	22				1/4	6	1/2	12	145	40	1000	3.0
1	25				1/4	6			150	30	760	
1-1/4	32	`			1/4	6			160	15	380	
1-1/2	38				1/4	6			170	10	250	

3" Under Water

Material Thickness (inches)	(mm)	Plasma Gas Flow Rate % Preflow (N_2 %)	Cutflow (N_2 %)	Shield Gas (CO_2) Pressure (psi)	Torch-to-work Distance (inches)	(mm)	Initial Torch Piercing Height (inches)	(mm)	Arc Voltage Setting (volts)	Travel Speed (ipm)	(mm/min.)	Approx. Motion Delay Time (sec)
3/16	5	**50**	**60**	**60**	1/8	3	1/4	6	125	180	4550	0.5
1/4	6	(66.4	(79.6	(210	1/8	3	1/4	6	130	150	3850	1.0
3/8	10	SCFH)	SCFH)	SCFH)	1/8	3	1/4	6	135	110	2700	1.5
1/2	12				1/8	3	1/4	6	140	75	1920	2.0
5/8	15				.157	4	.314	8	145	50	1350	2.0
3/4	20				3/16	5	3/8	10	145	38	950	2.5
7/8	22				1/4	6	1/2	12	150	28	700	3.0

Notes: **Set nitrogen plasma gas inlet pressure to 120 psi (8.3 bar)**
Set carbon dioxide shield gas inlet pressure to 90 psi (6.2 bar)
Production cutting above 7/8" (22 mm) not recommended

Stainless Steel

200 amps • H35 Plasma / N_2 Shield

Argon-Hydrogen Manifold (073109) Required*

This gas combination (Hypertherm recommends a mixture of 35% hydrogen and 65% argon for the plasma gas) gives maximum thickness cutting capability, minimum dross levels, minimum amount of surface contamination, excellent weldability and excellent cut quality on thicknesses greater than 1/2". On thicknesses less than 1/2", excessive dross levels may be experienced. Electrode life is extended when this combination is used.

WARNING

Do not use water muffler when cutting with argon-hydrogen

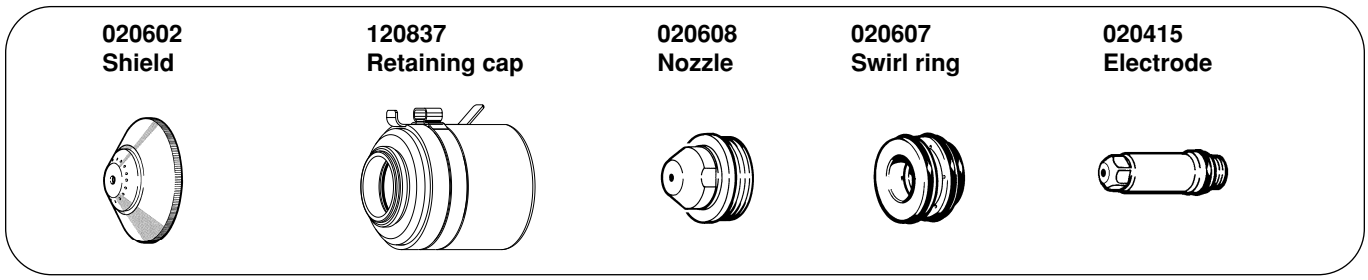

Above Water Only

Material Thickness (inches)	(mm)	Plasma Gas Flow Rate % Preflow (H35 %)	Cutflow (H35 %)	Shield Gas (N_2) Pressure (psi)	Torch-to-work Distance (inches)	(mm)	Initial Torch Piercing Height (inches)	(mm)	Arc Voltage Setting (volts)	Travel Speed (ipm)	(mm/min.)	Approx. Motion Delay Time (sec)
1/4	6	**25**	**25**	**60**	3/16	5	3/8	10	135	62	1600	1.0
3/8	10	(89.9	(89.9	(275	3/16	5	3/8	10	140	52	1300	1.0
1/2	12	SCFH)	SCFH)	SCFH)	3/16	5	3/8	10	140	42	1100	2.0
5/8	15				1/4	6	1/2	12	145	37	940	2.0
3/4	20				1/4	6	1/2	12	150	32	810	2.5
7/8	22				5/16	8	5/8	16	155	27	690	2.5
1	25				5/16	8			155	22	560	
1-1/4	32				5/16	8			165	16	400	
1-1/2	38				5/16	8			170	11	280	
1-3/4	44 5/16					8			180	8	200	
2	50 5/16					8			185	6	150	

*** See Section 7 for installation and operation with Argon-Hydrogen Manifold.**

Notes: **Set argon-hydrogen plasma gas inlet pressure to 120 psi (8.3 bar)**
Set nitrogen shield gas inlet pressure to 90 psi (6.2 bar)
Drop cutting above 1-1/2" (38 mm) not recommended.
Production cutting above 7/8" (22 mm) not recommended

Stainless Steel

100 amps • Air Plasma / Air Shield

This gas combination gives good cut speed, low dross and is very economical. Some surface nitriding and surface oxidation of alloying elements can occur.

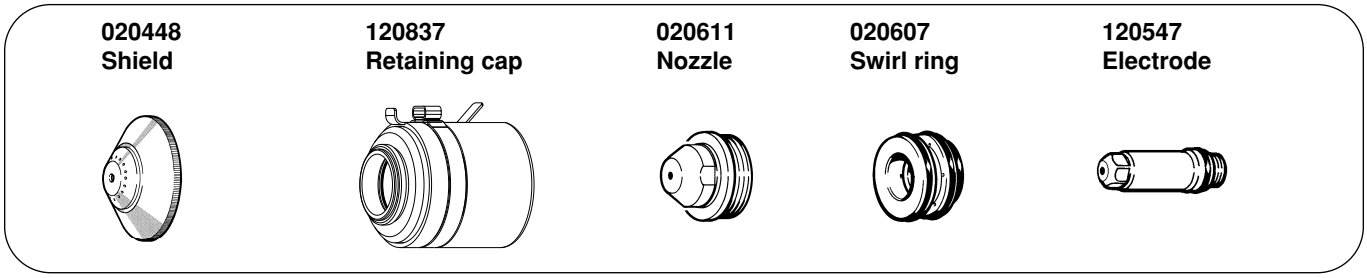

Above Water

Material Thickness (inches)	(mm)	Plasma Gas Flow Rate % Preflow (Air %)	Cutflow (Air %)	Shield Gas (Air) Pressure (psi)	Torch-to-work Distance (inches)	(mm)	Initial Torch Piercing Height (inches)	(mm)	Arc Voltage Setting (volts)	Travel Speed (ipm)	(mm/min.)	Approx. Motion Delay Time (sec)
1/8	3	**48**	**39**	**60**	3/32	2.5	3/16	5	125	140	3560	
3/16	5	(53.3	(44.9	(270	1/8	3	1/4	6	130	110	2800	0.5
1/4	6	SCFH)	SCFH)	SCFH)	1/8	3	1/4	6	130	80	2030	0.5
3/8	10				1/8	3	1/4	6	135	55	1400	0.5
1/2	12				1/8	3			140	35	890	
5/8	15				.157	4			145	25	635	
3/4	20				3/16	5			150	20	510	

3" Under Water

Material Thickness (inches)	(mm)	Plasma Gas Flow Rate % Preflow (Air %)	Cutflow (Air %)	Shield Gas (Air) Pressure (psi)	Torch-to-work Distance (inches)	(mm)	Initial Torch Piercing Height (inches)	(mm)	Arc Voltage Setting (volts)	Travel Speed (ipm)	(mm/min.)	Approx. Motion Delay Time (sec)
1/8	3	**48**	**39**	**60**	5/64	2	5/32	4	125	135	3400	
3/16	5	(53.3	(44.9	(270	1/8	3	1/4	6	130	100	2520	0.5
1/4	6	SCFH)	SCFH)	SCFH)	1/8	3	1/4	6	135	65	1720	0.5
3/8	10				1/8	3	1/4	6	140	45	1120	0.5
1/2	12				1/8	3			145	25	670	

Notes: **Set air plasma gas inlet pressure to 90 psi (6.2 bar)**
Set air shield gas inlet pressure to 90 psi (6.2 bar)
Production cutting above 3/8" (10 mm) not recommended

Stainless Steel

100 amps • H35 Plasma / N_2 Shield

Argon-Hydrogen Manifold (073109) Required*

This gas combination (Hypertherm recommends a mixture of 35% hydrogen and 65% argon for the plasma gas) gives good cut speed, but may result in excessive dross. Some surface nitriding and surface oxidation of alloying elements can occur.

WARNING

Do not use water muffler when cutting with argon-hydrogen

020448 Shield | **120837 Retaining cap** | **020611 Nozzle** | **020607 Swirl ring** | **020415 Electrode**

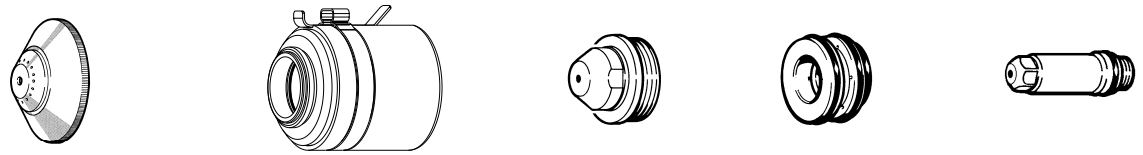

Above Water Only

Material Thickness (inches)	(mm)	Plasma Gas Flow Rate % Preflow (H35 %)	Cutflow (H35 %)	Shield Gas (N_2) Pressure (psi)	Torch-to-work Distance (inches)	(mm)	Initial Torch Piercing Height (inches)	(mm)	Arc Voltage Setting (volts)	Travel Speed (ipm)	(mm/min.)	Approx. Motion Delay Time (sec)
1/8	3	**13**	**13**	**60**	3/32	2.5	3/16	5	130	50	1260	
3/16	5	(46.7	(46.7	(270	1/8	3	1/4	6	135	40	1060	0.5
1/4	6	SCFH)	SCFH)	SCFH)	3/16	5	3/8	10	140	35	890	0.5
3/8	10				3/16	5	3/8	10	140	30	750	0.5
1/2	12				3/16	5	3/8	10	145	25	630	1.0

***See Section 7 for installation and operation with Argon-Hydrogen Manifold.**

Notes: **Set argon-hydrogen plasma gas inlet pressure to 120 psi (8.3 bar)**
Set nitrogen shield gas inlet pressure to 90 psi (6.2 bar)
Production cutting above 3/8" (10 mm) not recommended

Stainless Steel

40 amps • Air Plasma / Air Shield

This gas combination gives good cut speed, low dross level and is very economical. Some surface nitriding and surface oxidation of alloying elements can occur.

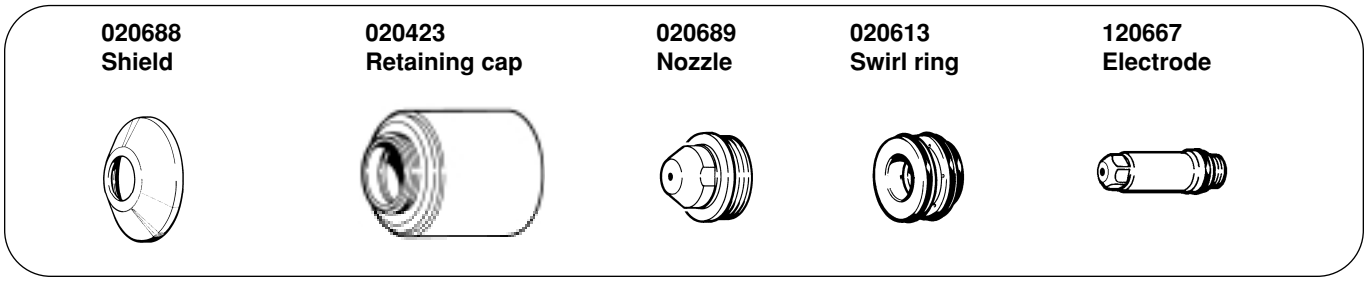

Above Water Only

Material Thickness (inches)	(mm)	Plasma Gas Flow Rate % Preflow (Air %)	Cutflow (Air %)	Shield Gas (Air) Pressure (psi)	Torch-to-work Distance (inches)	(mm)	Initial Torch Piercing Height (inches)	(mm)	Arc Voltage Setting (volts)	Travel Speed (ipm)	(mm/min.)	Approx. Motion Delay Time (sec)
.050	(18 GA.)	**40**	**20**	**60**	3/32	2.5	3/16	5	120	145	3700	
1/16	1.5	(46.0	(23.1	(275	3/32	2.5	3/16	5	120	120	3050	
1/8	3	SCFH)	SCFH)	SCFH)	3/32	2.5	3/16	5	125	75	1900	0.5
1/4	6				1/8	3			135	24	610	
3/8	10				1/8	3			140	12	300	

Notes: **Set air plasma gas inlet pressure to 90 psi (6.2 bar)**
Set air shield gas inlet pressure to 90 psi (6.2 bar)
Production cutting above 1/8" (3 mm) not recommended

Aluminum

200 amps • Air Plasma / Air Shield

This gas combination gives good cut speed, low dross levels and is very economical.

020424
Shield

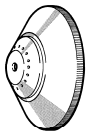

120837
Retaining cap

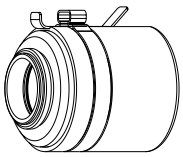

020608
Nozzle

020679
Swirl ring

120667
Electrode

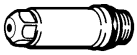

Above Water

Material Thickness (inches)	(mm)	Plasma Gas Flow Rate % Preflow (Air %)	Cutflow (Air %)	Shield Gas (Air) Pressure (psi)	Torch-to-work Distance (inches)	(mm)	Initial Torch Piercing Height (inches)	(mm)	Arc Voltage Setting (volts)	Travel Speed (ipm)	(mm/min.)	Approx. Motion Delay Time (sec)
3/16	5	**54**	**65**	**60**	1/8	3	1/4	6	130	220	5600	0.5
1/4	6	(62.3	(75.0	(270	1/8	3	1/4	6	140	190	4800	1.0
3/8	10	SCFH)	SCFH)	SCFH)	1/8	3	1/4	6	140	145	3700	2.0
1/2	12				1/8	3	1/4	6	145	110	2800	2.5
5/8	15				.157	4	.314	8	150	85	2200	2.5
3/4	20				3/16	5	3/8	10	155	65	1650	2.5
7/8	22				1/4	6	1/2	12	160	50	1300	2.5
1	25				1/4	6			165	35	900	
1-1/4	32	`			1/4	6			170	20	500	
1-1/2	38				1/4	6			175	12	300	

3" Under Water

Material Thickness (inches)	(mm)	Plasma Gas Flow Rate % Preflow (Air %)	Cutflow (Air %)	Shield Gas (Air) Pressure (psi)	Torch-to-work Distance (inches)	(mm)	Initial Torch Piercing Height (inches)	(mm)	Arc Voltage Setting (volts)	Travel Speed (ipm)	(mm/min.)	Approx. Motion Delay Time (sec)
3/16	5	**54**	**65**	**70**	1/8	3	1/4	6	135	210	5300	0.5
1/4	6	(62.3	(75.0	(280	1/8	3	1/4	6	140	170	4300	1.0
3/8	10	SCFH)	SCFH)	SCFH)	1/8	3	1/4	6	145	125	3150	2.0
1/2	12				1/8	3	1/4	6	150	90	2240	2.5
5/8	15				.157	4	.314	8	155	65	1650	3.0
3/4	20				3/16	5	3/8	10	160	45	1150	3.0

Notes: **Set plasma gas inlet pressure to 90 psi (6.2 bar)**
Set shield gas inlet pressure to 90 psi (6.2 bar)
Production cutting above 7/8" (22 mm) not recommended

Aluminum

200 amps • N_2 Plasma / Air Shield

This gas combination is used when cut edge quality is less important. Electrode life is extended when this combination is used.

020424 Shield	120837 Retaining cap	020608 Nozzle	020607 Swirl ring	020415 Electrode

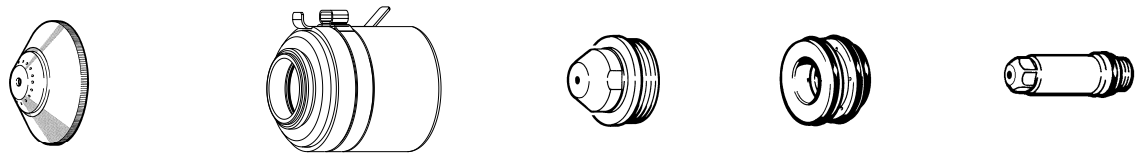

Above Water

Material Thickness (inches)	(mm)	Plasma Gas Flow Rate % Preflow (N_2 %)	Cutflow (N_2 %)	Shield Gas (Air) Pressure (psi)	Torch-to-work Distance (inches)	(mm)	Initial Torch Piercing Height (inches)	(mm)	Arc Voltage Setting (volts)	Travel Speed (ipm)	(mm/min.)	Approx. Motion Delay Time (sec)
3/16	5	**50**	**60**	**60**	1/8	3	1/4	6	130	180	4570	0.5
1/4	6	(66.4	(79.6	(270	1/8	3	1/4	6	135	160	4060	1.0
3/8	10	SCFH)	SCFH)	SCFH)	1/8	3	1/4	6	135	120	3050	1.5
1/2	12				1/8	3	1/4	6	140	80	2030	2.0
5/8	15				.157	4	.314	8	140	70	1780	2.0
3/4	20				3/16	5	3/8	10	150	50	1270	2.5
7/8	22				1/4	6	1/2	12	160	35	890	2.5
1	25				1/4	6			165	25	635	
1-1/4	32	`			1/4	6			175	20	510	
1-1/2	38				1/4	6			185	10	250	

3" Under Water

Material Thickness (inches)	(mm)	Plasma Gas Flow Rate % Preflow (N_2 %)	Cutflow (N_2 %)	Shield Gas (Air) Pressure (psi)	Torch-to-work Distance (inches)	(mm)	Initial Torch Piercing Height (inches)	(mm)	Arc Voltage Setting (volts)	Travel Speed (ipm)	(mm/min.)	Approx. Motion Delay Time (sec)
3/16	5	**50**	**60**	**70**	1/8	3	1/4	6	135	170	4350	0.5
1/4	6	(66.4	(79.6	(280	1/8	3	1/4	6	140	140	3650	1.0
3/8	10	SCFH)	SCFH)	SCFH)	1/8	3	1/4	6	140	100	2600	1.5
1/2	12				1/8	3	1/4	6	145	65	1620	2.0
5/8	15				.157	4	.314	8	145	55	1350	2.5
3/4	20				3/16	5	3/8	10	155	35	890	3.0
7/8	22				1/4	6	1/2	12	165	25	620	3.0

Notes: **Set plasma gas inlet pressure to 120 psi (8.3 bar)**
Set shield gas inlet pressure to 90 psi (6.2 bar)
Production cutting above 7/8" (22 mm) not recommended

Aluminum

200 amps • N_2 Plasma / CO_2 Shield

This gas combination is used when cut edge quality is less important. Electrode life is extended when this combination is used.

020424
Shield

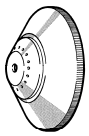

120837
Retaining cap

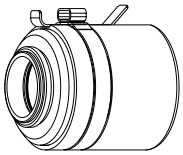

020608
Nozzle

020607
Swirl ring

020415
Electrode

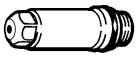

Above Water

Material Thickness (inches)	(mm)	Plasma Gas Flow Rate % Preflow (N_2 %)	Cutflow (N_2 %)	Shield Gas (CO_2) Pressure (psi)	Torch-to-work Distance (inches)	(mm)	Initial Torch Piercing Height (inches)	(mm)	Arc Voltage Setting (volts)	Travel Speed (ipm)	(mm/min.)	Approx. Motion Delay Time (sec)
3/16	5	**50**	**60**	**60**	1/8	3	1/4	6	130	185	4700	0.5
1/4	6	(66.4	(79.6	(210	1/8	3	1/4	6	135	160	4050	1.0
3/8	10	SCFH)	SCFH)	SCFH)	1/8	3	1/4	6	135	120	3050	2.0
1/2	12				1/8	3	1/4	6	140	95	2400	2.5
5/8	15				.157	4	.314	8	140	70	1800	2.5
3/4	20				3/16	5	3/8	10	150	55	1400	3.0
7/8	22				1/4	6	1/2	12	160	42	1050	3.0
1	25				1/4	6			165	33	840	
1-1/4	32	`			1/4	6			175	20	510	
1-1/2	38				5/16	8			185	11	280	

3" Under Water

Material Thickness (inches)	(mm)	Plasma Gas Flow Rate % Preflow (N_2 %)	Cutflow (N_2 %)	Shield Gas (CO_2) Pressure (psi)	Torch-to-work Distance (inches)	(mm)	Initial Torch Piercing Height (inches)	(mm)	Arc Voltage Setting (volts)	Travel Speed (ipm)	(mm/min.)	Approx. Motion Delay Time (sec)
3/16	5	**50**	**60**	**60**	1/8	3	1/4	6	130	175	4450	0.5
1/4	6	(66.4	(79.6	(220	1/8	3	1/4	6	135	145	3650	1.0
3/8	10	SCFH)	SCFH)	SCFH)	1/8	3	1/4	6	140	100	2600	2.0
1/2	12				1/8	3	1/4	6	145	75	1820	2.5
5/8	15				.157	4	.314	8	145	55	1350	2.5
3/4	20				3/16	5	3/8	10	155	40	980	3.0
7/8	22				1/4	6	1/2	12	165	30	750	3.0

Notes: **Set plasma gas inlet pressure to 120 psi (8.3 bar)**
Set shield gas inlet pressure to 90 psi (6.2 bar)
Production cutting above 7/8" (22 mm) not recommended

Aluminum

200 amps • H35 Plasma / N_2 Shield

Argon-Hydrogen Manifold (073109) Required*

This gas combination (Hypertherm recommends a mixture of 35% hydrogen and 65% argon for the plasma gas) gives maximum thickness cutting capability, excellent cut quality and excellent weldability. Electrode life is extended when this combination is used.

WARNING

Do not use water muffler when cutting with argon-hydrogen

020602 Shield

120837 Retaining cap

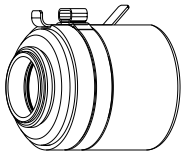

020608 Nozzle

020607 Swirl ring

020415 Electrode

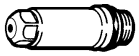

Above Water Only

Material Thickness (inches)	(mm)	Plasma Gas Flow Rate % Preflow (H35 %)	Cutflow (H35 %)	Shield Gas (N_2) Pressure (psi)	Torch-to-work Distance (inches)	(mm)	Initial Torch Piercing Height (inches)	(mm)	Arc Voltage Setting (volts)	Travel Speed (ipm)	(mm/min.)	Approx. Motion Delay Time (sec)
3/16	5	**25**	**25**	**60**	3/16	5	3/8	10	130	170	4300	0.5
1/4	6	(89.9	(89.9	(275	3/16	5	3/8	10	130	155	4000	1.0
3/8	10	SCFH)	SCFH)	SCFH)	1/4	6	1/2	12	135	120	3000	2.0
1/2	12				1/4	6	1/2	12	140	100	2550	2.0
5/8	15				1/4	6	1/2	12	145	80	2000	2.5
3/4	20				5/16	8	5/8	16	150	60	1500	2.5
7/8	22				5/16	8	5/8	16	155	50	1250	2.5
1	25				5/16	8			155	40	1000	
1-1/4	32				5/16	8			165	26	660	
1-1/2	38				5/16	8			170	18	460	
1-3/4	44				5/16	8			180	12	300	
2	50				5/16	8			185	7	180	

*** See Section 7 for installation and operation with Argon-Hydrogen Manifold.**

Notes: **Set plasma gas inlet pressure to 120 psi (8.3 bar)**
Set shield gas inlet pressure to 90 psi (6.2 bar)
Production cutting above 7/8" (22 mm) not recommended

Aluminum

100 amps • Air Plasma / Air Shield

This gas combination gives good cut speed, low dross levels and is very economical.

020448
Shield

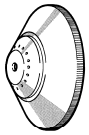

120837
Retaining cap

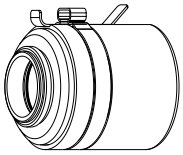

020611
Nozzle

020607
Swirl ring

120547
Electrode

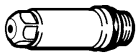

Above Water

Material Thickness (inches)	(mm)	Plasma Gas Flow Rate % Preflow (Air %)	Cutflow (Air %)	Shield Gas (Air) Pressure (psi)	Torch-to-work Distance (inches)	(mm)	Initial Torch Piercing Height (inches)	(mm)	Arc Voltage Setting (volts)	Travel Speed (ipm)	(mm/min.)	Approx. Motion Delay Time (sec)
1/8	3	**48**	**39**	**60**	3/32	2.5	3/16	5	135	110	2800	
3/16	5	(55.3	(44.9	(270	1/8	3	1/4	6	140	90	2290	0.5
1/4	6	SCFH)	SCFH)	SCFH)	1/8	3	1/4	6	145	70	1780	0.5
3/8	10				1/8	3	1/4	6	145	50	1270	0.5
1/2	12				1/8	3			150	40	1010	
5/8	15				.157	4			155	30	760	
3/4	20				3/16	5			160	25	635	

3" Under Water

Material Thickness (inches)	(mm)	Plasma Gas Flow Rate % Preflow (Air %)	Cutflow (Air %)	Shield Gas (Air) Pressure (psi)	Torch-to-work Distance (inches)	(mm)	Initial Torch Piercing Height (inches)	(mm)	Arc Voltage Setting (volts)	Travel Speed (ipm)	(mm/min.)	Approx. Motion Delay Time (sec)
1/8	3	**48**	**39**	**70**	5/64	2	5/32	4	135	100	2650	
3/16	5	(55.3	(44.9	(280	1/8	3	1/4	6	140	80	2050	0.5
1/4	6	SCFH)	SCFH)	SCFH)	1/8	3	1/4	6	145	60	1510	0.5
3/8	10				1/8	3	1/4	6	150	40	1000	0.5
1/2	12				1/8	3			155	30	750	

Notes: **Set plasma gas inlet pressure to 90 psi (6.2 bar)**
Set shield gas inlet pressure to 90 psi (6.2 bar)
Production cutting above 3/8" (10 mm) not recommended

Aluminum

100 amps • H35 Plasma / N_2 Shield

Argon-Hydrogen Manifold (073109) Required*

This gas combination (Hypertherm recommends a mixture of 35% hydrogen and 65% argon for the plasma gas) gives good cut speed, low dross levels and is very economical.

WARNING

Do not use water muffler when cutting with argon-hydrogen

020448 Shield

120837 Retaining cap

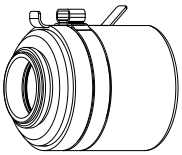

020611 Nozzle

020607 Swirl ring

020415 Electrode

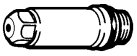

Above Water Only

Material Thickness (inches)	(mm)	Plasma Gas Flow Rate % Preflow (H35 %)	Cutflow (H35 %)	Shield Gas (N_2) Pressure (psi)	Torch-to-work Distance (inches)	(mm)	Initial Torch Piercing Height (inches)	(mm)	Arc Voltage Setting (volts)	Travel Speed (ipm)	(mm/min.)	Approx. Motion Delay Time (sec)
1/8	3	**13**	**13**	**60**	3/32	2.5	3/16	5	135	95	2440	
3/16	5	(46.7	(46.7	(270	1/8	3	1/4	6	140	85	2200	0.5
1/4	6	SCFH)	SCFH)	SCFH)	1/8	3	1/4	6	145	80	1980	0.5
3/8	10				1/8	3	1/4	6	145	60	1530	0.5
1/2	12				1/8	3			150	50	1280	

*** See Section 7 for installation and operation with Argon-Hydrogen Manifold.**

Notes: **Set plasma gas inlet pressure to 120 psi (8.3 bar)**
Set shield gas inlet pressure to 90 psi (6.2 bar)
Production cutting above 3/8" (10 mm) not recommended

Aluminum

40 amps • Air Plasma / Air Shield

This gas combination gives good cut speed, low dross levels and is very economical.

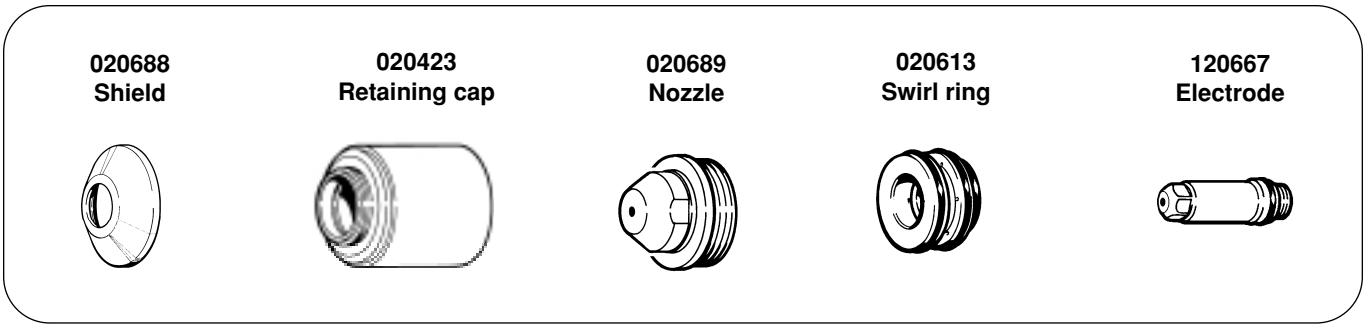

Above Water Only

Material Thickness (inches)	(mm)	Plasma Gas Flow Rate % Preflow (Air %)	Cutflow (Air %)	Shield Gas (Air) Pressure (psi)	Torch-to-work Distance (inches)	(mm)	Initial Torch Piercing Height (inches)	(mm)	Arc Voltage Setting (volts)	Travel Speed (ipm)	(mm/min.)	Approx. Motion Delay Time (sec)
3/32	2.5	**40**	**20**	**60**	3/32	2.5	3/16	5	120	140	3550	
1/8	3	(46.0	(23.1	(275	3/32	2.5	3/16	5	130	100	2550	0.5
1/4	6	SCFH)	SCFH)	SCFH)	1/8	3			140	35	900	
3/8	10				1/8	3			150	15	350	

Notes: **Set plasma gas inlet pressure to 90 psi (6.2 bar)**
Set shield gas inlet pressure to 90 psi (6.2 bar)
Production cutting above 1/8" (3 mm) not recommended

Mild Steel - Beveling Consumables

200 amps • O_2 Plasma / Air Shield

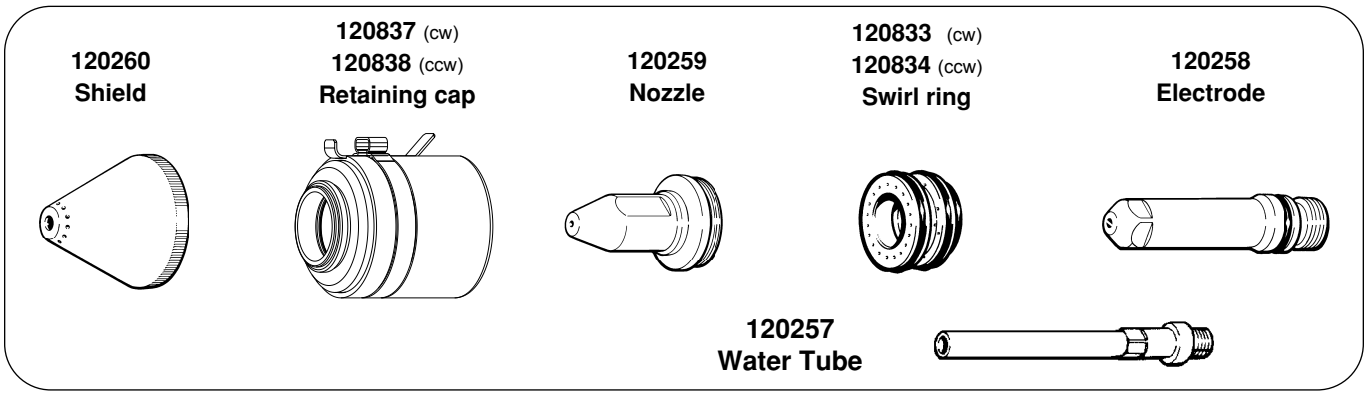

Above Water Only

Material Thickness (inches)	(mm)	Plasma Gas Flow Rate % Preflow (O_2 % N_2 %)	Cutflow (O_2 % N_2 %)	Shield Gas (Air) Pressure (psi)	Torch-to-work Distance (inches)	(mm)	Initial Torch Piercing Height (inches)	(mm)	Arc Voltage Setting (volts)	Travel Speed (ipm)	(mm/min.)	Approx. Motion Delay Time (sec)
1/4	6	**12 38**	**64 0**	**60**	1/8	3	1/4	6	115	160	4060	0.5
.315	8	(14.9 / 50.4	(79.6 / 0	(270	1/8	3	1/4	6	120	120	3000	0.5
3/8	10	SCFH)	SCFH)	SCFH)	1/8	3	1/4	6	120	100	2540	1.0
1/2	12				.157	4	.314	8	120	80	2030	2.0
5/8	15				.157	4	.314	8	125	70	1780	2.0
3/4	20				3/16	5	3/8	10	130	55	1400	2.5
7/8	22				1/4	6	1/2	12	135	45	1140	2.5
1	25				1/4	6	1/2	12	135	35	890	2.5
1 1/4	32				1/4	6			140	22	560	
1-1/2	38				1/4	6			150	15	380	
1-3/4	44				5/16	8			160	10	250	
2	50				5/16	8			170	7	180	

Notes: **Set oxygen plasma gas inlet pressure to 120 psi (8.3 bar).**
Set nitrogen plasma gas inlet pressure to 120 psi (8.3 bar).
Set shield gas inlet pressure to 90 psi (6.2 bar).
Production cutting above 1" (25 mm) not recommended

Beveling cuts should be made between 45° and 90° to the work surface.

Mild Steel Gouging

200 amps • Air Plasma / Air Shield

020485 Shield

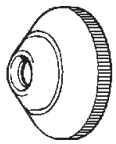

120837 Retaining cap

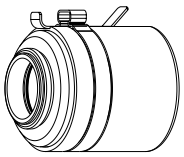

020615 Nozzle

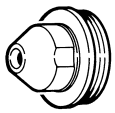

020607 Swirl ring

120667 Electrode

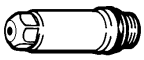

Plasma Gas Flow Rate %		Shield Gas (Air) Pressure (psi)	Arc Current Setting (amps)	Plasma Gas (Air) Inlet Pressure (psi)	Shield Gas (Air) Inlet Pressure (psi)
Preflow (Air %)	Cut Flow (Air %)				
71	71	50	200	90	90
(81.8 SCFH)					

Stainless Steel or Aluminum Gouging

200 amps • H35 Plasma / N_2 Shield

Argon-Hydrogen Manifold (073109) Required*

Hypertherm recommends a mixture of 35% hydrogen and 65% argon for the plasma gas.

020485 Shield

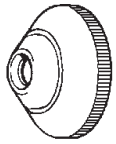

120837 Retaining cap

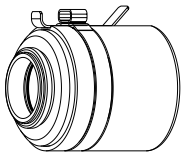

020615 Nozzle

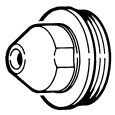

020607 Swirl ring

020415 Electrode

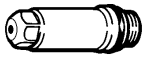

Plasma Gas Flow Rate %		Shield Gas (N_2) Pressure (psi)	Arc Current Setting (amps)	Plasma Gas (H35) Inlet Pressure (psi)	Shield Gas (N_2) Inlet Pressure (psi)
Preflow (H35 %)	Cut Flow (H35 %)				
29	29	50	200	120	90
(81.8 SCFH)					

***See Section 7 for installation and operation with Argon-Hydrogen Manifold.**

Changing Consumable Parts

WARNING

Always disconnect power to the power supply before inspecting or changing torch consumable parts.

Check the consumable parts daily for wear before cutting. Before removing parts, bring the torch to the edge of the machine, with the lifter raised to its highest point. This prevents the danger of dropping the consumables into the water of the water table.

Removal and Inspection – Refer to Figure 6-7

1. Remove **Retaining cap** and **Shield** by unscrewing the retaining cap by hand.

2. Check the shield for external signs of wear. It should be clean and clear of metal debris. The gas holes along the edge of the shield should not be blocked with debris. The center hole should not have any nicks or gouges, and should show no signs of arcing activity.

3. Unscrew and remove the shield from the retaining cap. Inspect the gas holes from the inside. The holes should be clear of metal or other debris. (Debris can cause arcing.)

4. Inspect the two O-rings on the **Torch body**. They should be lubricated and undamaged. If they are dry, lubricate them lightly with a very thin film of the lubricant provided in the consumable parts kit. If they are damaged, replace them.

5. Using the 3/4" side of the wrench supplied with the consumable parts kit, remove the **Nozzle**. Inspect it for damage or signs of wear. You can clean the inside of the nozzle with steel wool, but be sure to remove any remnants of the steel wool afterward. The hole in the nozzle should not be worn or oval-shaped.

6. Using the 3/8" center hole in the wrench, remove the **Electrode** and inspect it. If the center of an all copper electrode has a pit more than .044" (1.1 mm) deep, replace it. A SilverPlus electrode should be replaced when the pit depth exceeds approximately two times the recommended depth of an all copper electrode. Use the electrode gauge assembly supplied in the consumable parts kit to measure pit depth. If the electrode is still good, inspect its O-ring: it should be lubricated and undamaged. If it is dry, lubricate it lightly with a very thin film of lubricant provided in the consumable parts kit. If it is damaged, replace it.

7. Remove the **Swirl ring** from the electrode and inspect it. It should be clean, and the holes on the top and sides should not be plugged. Inspect its O-ring. It should be lubricated and undamaged. If it is dry, lubricate it lightly with a very thin film of lubricant provided in the consumable parts kit. If it is damaged, replace it.

8. Inspect the inside of the **Torch body** by using a mirror, or by looking carefully inside. The **Current ring** inside of the torch body should be clean and undamaged. Use a clean paper towel or Q-tip to remove dirt, grease, etc. A preferred method to clean the current ring is with a clean paper towel or Q-tip dipped in water or 3% hydrogen peroxide.
   If the **Water tube** is damaged at all, it may need to be replaced. See *Changing the Water Tube*.

Replacement

1. Before installing the **Electrode**, be sure to lightly grease the O-ring with a small amount of silicon lubricant. Replace the electrode and tighten it with the wrench. **Do not overtighten**.

2. Before installing the **Swirl ring**, be certain that the O-rings have been lubricated with a small amount of silicon grease. Install the swirl ring with the bottom O-ring facing the inside of the torch. Push it into place. Be sure to hold the swirl ring in place until the nozzle is installed to avoid dropping it into the water of the water table.

3. Install the nozzle and finger-tighten it. Finish tightening it with the wrench. **Do not overtighten**.

4. Screw on the **Shield** to the **Retaining cap** and tighten by hand. Screw on the retaining cap to the torch by hand. Make sure that it is tightened snugly; if it is loose, it can affect the shield gas flow.

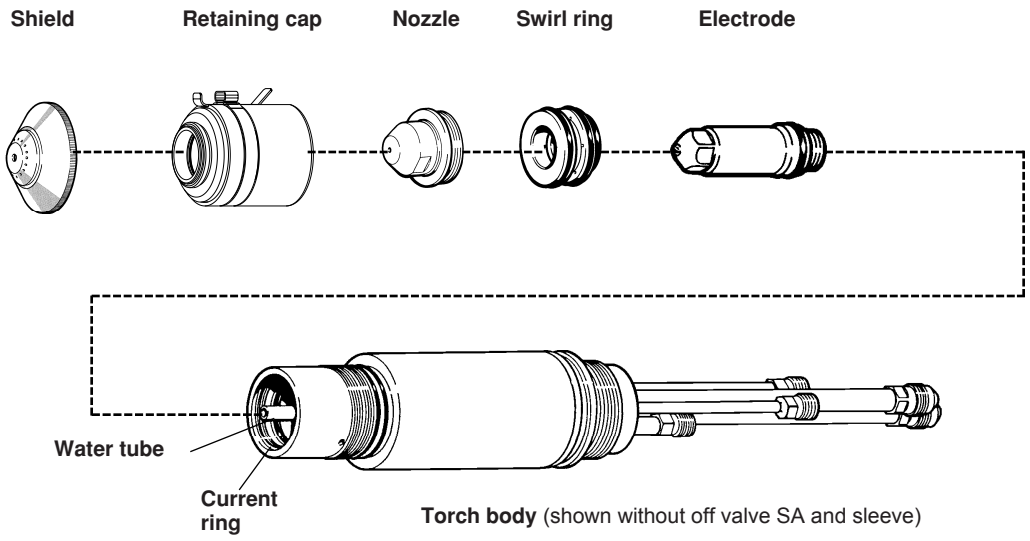

Figure 6-7 Changing Consumable Parts

Changing the Water Tube

Problems and causes you may find with a defective or improperly installed water tube:

- Short electrode life: Water tube not screwed in tightly
- Flow switch interlock shutting down the system: Water flow restricted due to loose water tube.
- Humming or rattling sound coming from the torch: Water tube bent or loose

If you suspect a problem with the water tube, you may need to replace it.

1. Disconnect power supply from power source.
2. Remove all consumables from torch (see *Changing Consumable Parts*).
3. Look for any damage or bends in the water tube.
4. Remove and replace the water tube by using the water tube wrench (027347) supplied by Hypertherm – Fig. 6-8. **When installing water tube, do not over tighten!** Snug down by hand only.

WARNING

Always disconnect the power supply from the main power source before inspecting or changing the torch parts.

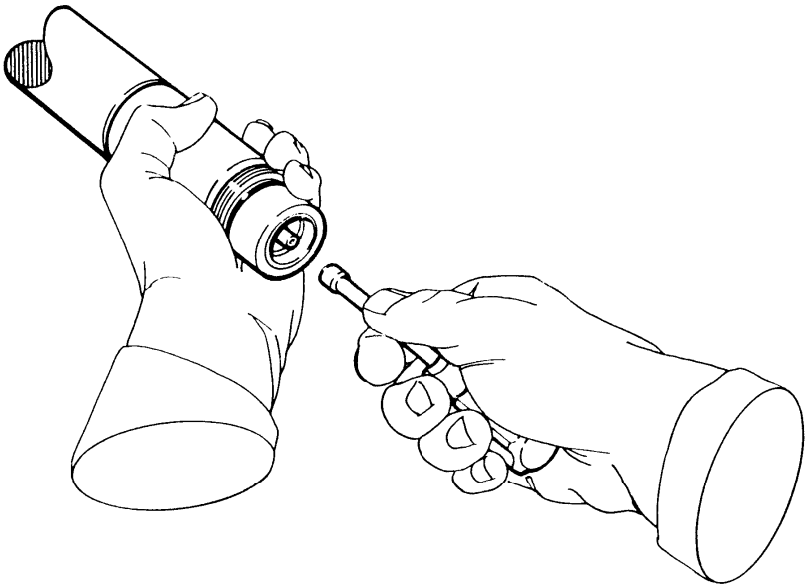

Figure 6-8 Changing the Water Tube

How to Optimize Cut Quality

The following tips and procedures will help produce square, straight, smooth and dross-free cuts.

Tips for Table and Torch

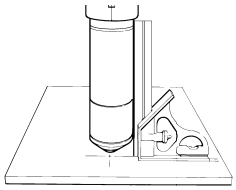

- Use a square to align the torch at right angles to the workpiece.
- The torch may travel more smoothly if you clean, check and “tune” the rails and drive system on the cutting table. Unsteady machine motion can cause a regular, wavy pattern on the cut surface.
- The torch must not touch the workpiece during cutting. Contact can damage the shield and nozzle, and affect the cut surface.

Plasma Set-Up Tips

Follow carefully each step in the *Daily Start-Up* procedure described earlier in this section.

Purge the gas lines before cutting.

Maximize the Life of Consumable Parts

Hypertherm’s LongLife® process automatically “ramps up” the gas and current flows at the start and ramps them down at the end of each cut, to minimize erosion of the electrode’s center surface. The LongLife process also requires that cuts start and stop on the workpiece.

- The torch should never fire into the air.
  - Starting the cut at the edge of the workpiece is acceptable, as long as the arc is not fired in the air.
  - To start with a pierce, use a pierce height that is 1.5 to 2 times the torch-to-work distance. See Cut Charts.
- Each cut should end with the arc still attached to the workpiece, to avoid arc blow-outs (ramp-down errors).
  - When cutting drop parts (small parts that drop down after being cut from the workpiece), check that the arc stays attached to the edge of the workpiece, for proper ramp-down.
- If arc blow-outs occur, try one or more of the following:
  - Reduce the cutting speed during the final part of the cut.
  - Stop the arc before the part is completely cut, to allow completion of the cut during the ramp-down.
  - Program the path of the torch into the scrap area for ramp-down.

    Note: Use a “chain cut” if possible, so the path of the torch can lead directly from one cut part into the next, without stopping and starting the arc. However, do not allow the path to lead off the workpiece and back on, and remember that a chain cut of long duration will cause electrode wear.

    Note: It may be difficult to achieve the full benefits of the LongLife process in some conditions.

Additional Factors of Cut Quality

Cut Angle

A cut part whose 4 sides average less than 4° of cut angle is considered acceptable.

Note: The squarest cut angle will be on the right side with respect to the forward motion of the torch.

Note: To determine whether a cut-angle problem is being caused by the plasma system or the drive system, make a test cut and measure the angle of each side. Next, rotate the torch 90° in its holder and repeat the process. If the angles are the same in both tests, the problem is in the drive system.

If a cut-angle problem persists after “mechanical causes” have been eliminated (See *Tips for Table and Torch,* previous page), check the torch-to-work distance, especially if cut angles are all positive or all negative.

- A positive cut angle results when more material is removed from the top of the cut than from the bottom.
- A negative cut angle results when more material is removed from the bottom of the cut.

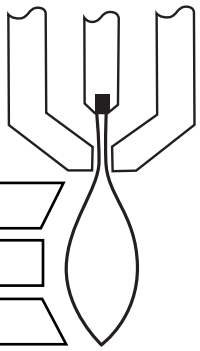

Problem	Cause	Solution
Negative cut angle	The torch is too low.	Increase arc voltage to raise the torch.
Square cut		
Positive cut angle	The torch is too high.	Decrease arc voltage to lower the torch.

Dross

Low-speed dross forms when the torch’s cutting speed is too slow and the arc shoots ahead. It forms as a heavy, bubbly deposit at the bottom of the cut and can be removed easily. Increase the speed to reduce the dross.

High-speed dross forms when the cutting speed is too fast and the arc lags behind. It forms as a thin, linear bead of solid metal attached very close to the cut. It is welded to the bottom of the cut and is difficult to remove. To reduce high-speed dross:

- Decrease the cutting speed.
- Decrease arc voltage, to decrease the torch-to-work distance.
- Increase O_2 in the shield gas to increase the range of dross-free cutting speeds. (Only HyDefinition and HT4400 systems can accommodate mixed-gas shield gases.)

Notes: Dross is more likely to form on warm or hot metal than on cool metal. For example, the first cut in a series of cuts will likely produce the least dross. As the workpiece heats up, more dross may form on subsequent cuts.

Dross is more likely to form on mild steel than on stainless steel or aluminum.

Worn or damaged consumables may produce intermittent dross.

Straightness of the Cut Surface

A typical plasma cut surface is slightly concave.

The cut surface may become more concave, or convex. Correct torch height is required to keep the cut surface acceptably close to straight.

A strongly concave cut surface occurs when the torch-to-work distance is too low. Increase the arc voltage to increase the torch-to-work distance and straighten the cut surface.

A convex cut surface occurs when the torch-to-work distance is too great or the cutting current is too high. First, reduce the arc voltage, then reduce the cutting current. If there is overlap between different cutting currents for that thickness, try the consumables designed for the lower current.

Additional Improvements

Some of these improvements involve trade-offs, as described.

Smoothness of Cut Surface (Surface Finish)

- (HyDefinition and HT4400 only) On mild steel, a higher concentration of N_2 in the O_2-N_2 shield mixture may produce a smoother cut surface.
  Trade-off: This may produce more dross.

- (HyDefinition and HT4400 only) On mild steel, a higher concentration of O_2 in the O_2-N_2 shield mixture may increase the cutting speed and produce less dross.
  Trade-off: This may produce a rougher cut surface.

Piercing

- The pierce delay must be sufficiently long that the arc can pierce the material before the torch moves, but not so long that the arc “wanders” while trying to find the edge of a large hole.

- A higher shield gas preflow may help blow the molten metal away during piercing.
  Trade-off: This may reduce starting reliability.

  Note: When piercing at maximum thicknesses, the ring of dross that forms during the pierce may be high enough to contact the torch when the torch begins to move after the pierce is complete. A “flying pierce,” which makes the pierce while the torch is moving, may eliminate the torch vibration that follows contact between the torch and the ring of dross.

How to Increase Cutting Speed

- Decrease the torch-to-work distance.
  Trade-off: This will increase the negative cut angle

  Note: The torch must not touch the workpiece while piercing or cutting.

Section 7

OPERATION: ARGON-HYDROGEN MANIFOLD

In this section:

Front Panel Controls and Indicators 7-2
Installation 7-3
Operation 7-6
Check Torch 7-6
Turn Gases On 7-6
Turn Power Supply On and Adjust Voltage/Current 7-7
Adjust H35 Gas Flow 7-7
After Cutting with Argon-Hydrogen 7-8

Front Panel Controls and Indicators (Fig. 7-1)

- **Flowmeter Adjust Valve (MV1)**
  Adjusts argon-hydrogen plasma gas flow rate % in **Test**/**Preflow** mode. Preflow plasma gas flow rate percentages are specified in *Cut Charts*.

- **Argon-Hydrogen Flowmeter (FM1)**
  Indicates the argon-hydrogen plasma gas flow rate %. Flow rates for argon-hydrogen are specified in *Cut Charts*.

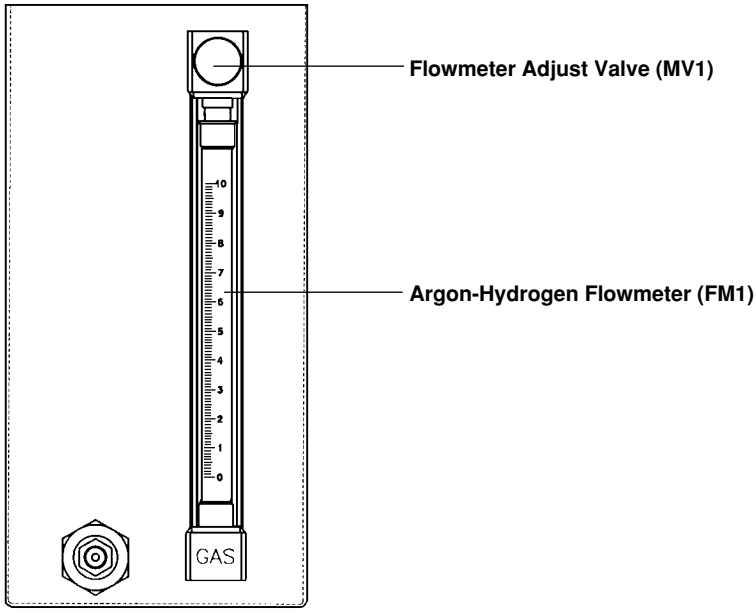

Figure 7-1 Argon-Hydrogen Manifold Front Panel Controls and Indicators

Installation

WARNING

Before operating the argon-hydrogen manifold, turn all power and gases connected to the HT2000 OFF. Follow the installation and operation procedures before turning power and gases ON.

Argon-Hydrogen Cable – Argon-Hydrogen Manifold to Power Supply (PS)

A. Connect the receptacle end of the argon-hydrogen cable (Fig. 7-3) to **Cable Connection Point** on the argon-hydrogen manifold. (Fig.7-2)

B. Connect the other end of the cable to TB4 (smaller terminal strip on the inside rear panel of the power supply). Match up wires 102, 103, 13 and 14 to wires already connected to the strip. Connect the two shield wires to points labeled as PE (protective earth).

Argon-Hydrogen supply to Argon-Hydrogen Manifold

A. Attach one end of the supply hosing to the argon/hydrogen supply tank or regulator, and attach the other end to the **Argon-Hydrogen Supply Hose Connection** on the manifold. (Fig. 7-2)

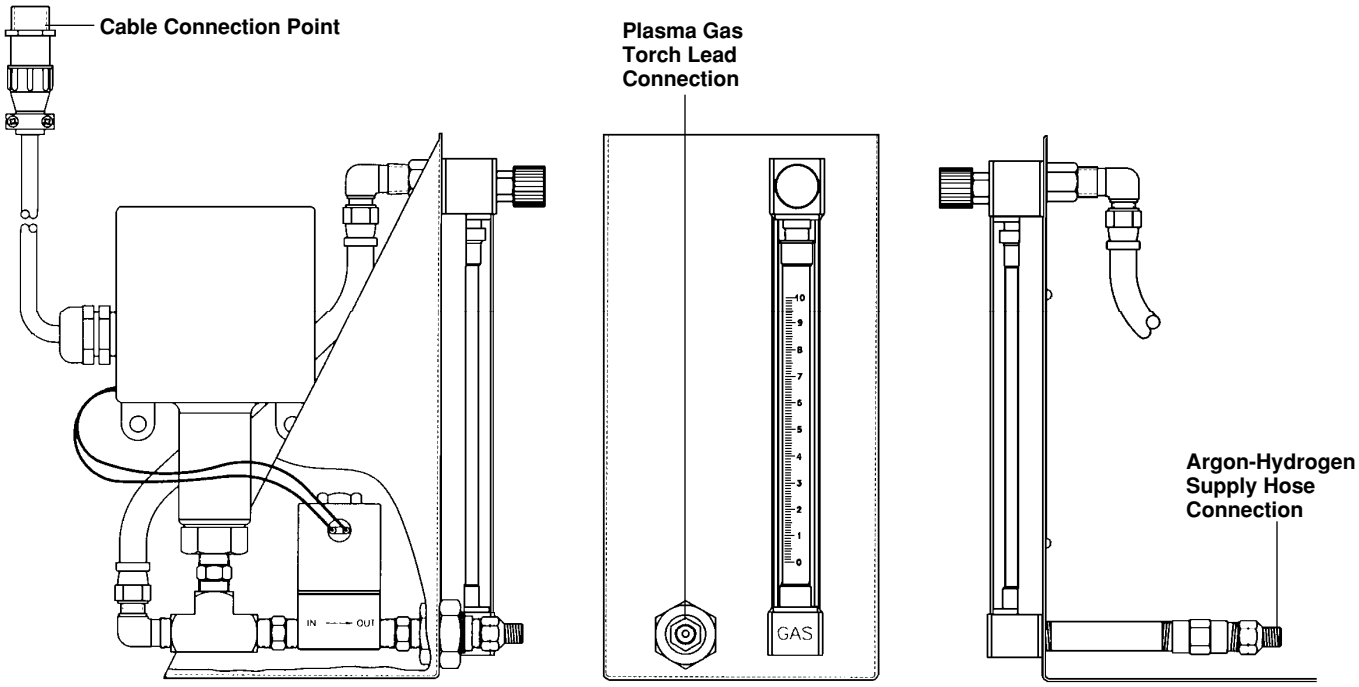

Figure 7-2 Argon-Hydrogen Manifold Connection Points

Argon-Hydrogen Console End **Power Supply TB4 End**

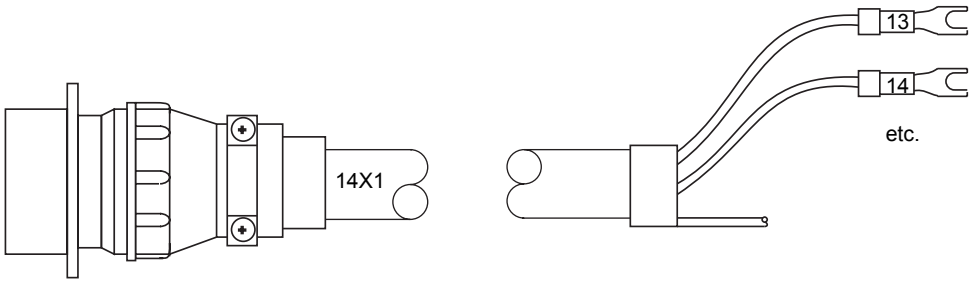

Wire Color	HT2000 Power Supply TB4 End	Signal
Red	13	PS1 / Plasma
Black	14	PS1 / Plasma
Shield	12	Shield
Green	102	SV5 / Plasma OFF
Black	103	SV5 / Plasma OFF
Shield	9	Shield

Part No.	Length	Part No.	Length
023660	**15 ft (4.6 m)**	**023663**	**75 ft (23 m)**
023661	**25 ft (7.6 m)**	**023664**	**100 ft (30 m)**
023662	**50 ft (15 m)**	**023665**	**150 ft (46 m)**

Figure 7-3 Argon-Hydrogen Manifold Cable – Argon-Hydrogen Manifold to Power Supply

Part No.	Length
024355	**12 in (305 mm)**
024354	**10 ft (3 m)**
024368	**20 ft (6.2 m)**
024369	**30 ft (9.1 m)**
024370	**40 ft (12.4 m)**
024443	**50 ft (15 m)**
024467	**75 ft (23 m)**

Figure 7-4 Plasma Gas Torch Lead – Argon-Hydrogen Manifold to Torch

Plasma gas torch lead – Argon-Hydrogen Manifold to Torch (Fig. 7-5)

A. Turn all plasma and shield gas supply tanks **OFF**.

B. Remove the existing **Plasma gas torch lead** from **Point 1**.

C. Attach one end of the argon-hydrogen plasma gas torch lead (Fig. 7-4) to the **Plasma gas torch lead connection** located on the front of the manifold. (Fig. 7-5)

D. Attach the other end of the plasma gas torch lead to **Point 1** on the torch**.** (Fig. 7-5)

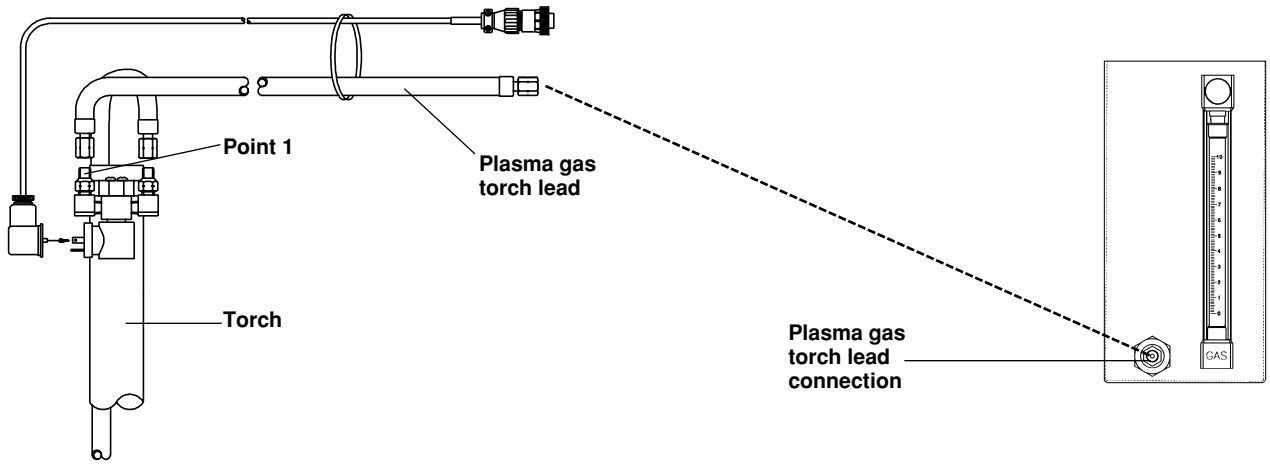

Figure 7-5 Argon-Hydrogen Manifold to Torch Connection Points

Nitrogen supply to Gas Console (Fig. 7-6)

Connect the nitrogen supply to the shield connection at the rear of the gas console. (Fig. 7-5)

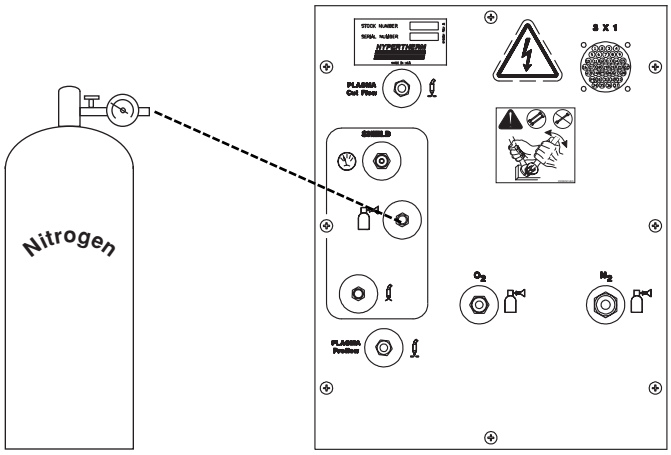

Figure 7-6 Nitrogen Supply to Gas Console

Operation

Prior to operation, ensure that your cutting environment and that your clothing meet the safety requirements outlined in the ***Safety*** section of this manual. If problems occur during operation, refer to the *Installation* portion of this section as well as **Section 4**.

WARNING

Before operating this system, you must read the *Safety* section thoroughly!
Verify main disconnect switch to the HT2000 power supply is OFF before proceeding with the following steps.

Note: For operation without argon-hydrogen manifold, see **Section 6: Operation.**

Check Torch

1. Remove the consumables from the torch and check for worn or damaged parts. **Always place the consumables on a clean, dry, oil-free surface after removing. Dirty consumables can cause the torch to malfunction.**
   - Check the pit depth of the electrode. The electrode should be replaced when the depth exceeds .040 inch (1 mm).
   - Wipe the current ring in the torch with a clean paper towel or Q-tip (see Figure 6-7).
   - Refer to the *Cut Charts* to choose the correct consumables for your cutting needs.
2. Replace consumable parts. Refer to *Changing Consumable Parts* in **Section 6** for detailed information on replacing consumables.
3. Ensure that the torch is squared to the material. Refer to **Section 4** for the torch alignment procedure.
4. Verify that argon-hydrogen cable 14X1 is connected to the argon-hydrogen manifold.

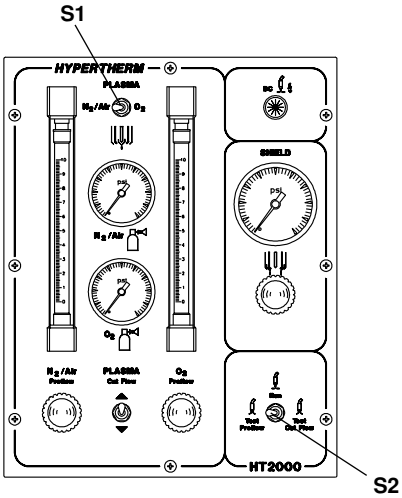

Turn Gases On

1. Set **S2** toggle switch on the gas console to **Run.**
2. Set **S1** switch to **N2**/**Air** position.
3. Turn the argon-hydrogen gas supply and the nitrogen gas supply **ON.** Verify that the oxygen and air gas supplies remain **OFF**.
   - Adjust the argon-hydrogen **plasma gas** supply regulator to read **120 psi +/- 10 psi (8.2 bar +/- 0.7 bar)**.
   - Adjust supply regulator for **shield gas** to read **90 psi +/- 10 psi (6.2 bar +/- 0.7 bar)**.

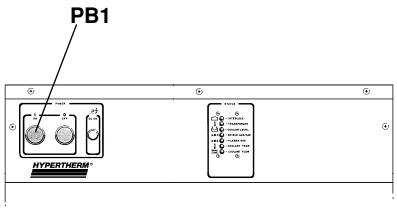

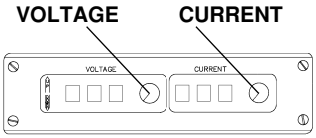

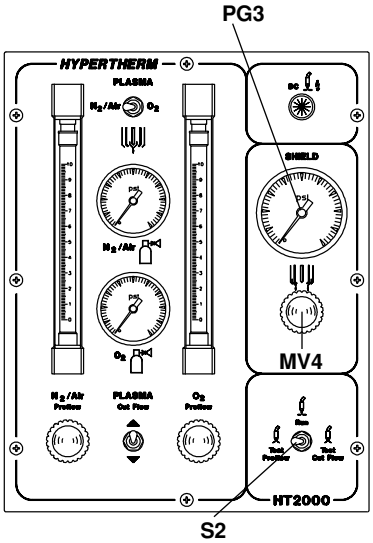

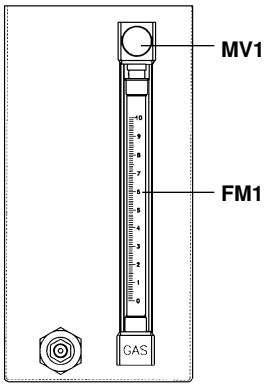

Turn Power Supply On and Adjust Voltage/Current

1. Turn main disconnect switch ON. See *Status Indicators Before Startup* in **Section 6**.

2. Turn on the power supply by depressing the **POWER ON (1)** button (**PB1**) on the power supply. Ensure that the green **POWER ON** indicator lights. If the **POWER ON** light fails to come on, see **Section 4** for proper setup.

3. Set the **VOLTAGE** and **CURRENT** on the DR V/C module. Select the arc current and arc voltage from the *Cut Charts* on pages 6-14 through 6-35 for the type and thickness of metal to be test cut.

Adjust H35 Gas Flow

1. Set **S2** on the gas console to **Test Preflow.** Verify that the argon-hydrogen supply regulator reads 120 psi (8.2 bar).

2. Look at the flowmeter (**FM1**) on the argon-hydrogen manifold and set the **Preflow** plasma gas flow rate % by referring to the *Cut Charts* and turning the argon-hydrogen flowmeter adjust knob (**MV1**).

3. Look at the shield gas pressure gauge (**PG3**) on the gas console, and set to the *Cut Chart* specifications by turning the shield gas adjust knob (**MV4**).

4. Set **S2** to **Run** after the test preflow rate has been set.

   The system is now ready to run.

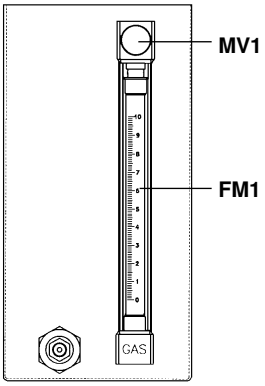

After Cutting with Argon-Hydrogen

1. Turn MV1 to the closed position.
2. Disconnect the 14X1 argon-hydrogen cable at the cable connection point of the argon-hydrogen manifold. See Figure 7-2.
3. Remove the argon-hydrogen plasma gas torch lead from point 1 of the torch. See Figure 7-5.
4. Connect the machine torch plasma hose from the motor valve console to point 1 of the torch. See *Connecting the Off-Valve Cable and Plasma Hose from the Torch to the Motor Valve Console* in Section 4.
5. Remove the nitrogen supply hose from the shield supply connection of the gas console.
6. Connect the nitrogen supply hose to the N_2 connection of the gas console. See Figure 7-7.
7. Connect the shield gas supply hose to the shield supply connection of the gas console. See *Gas Console Connections* in Section 4.

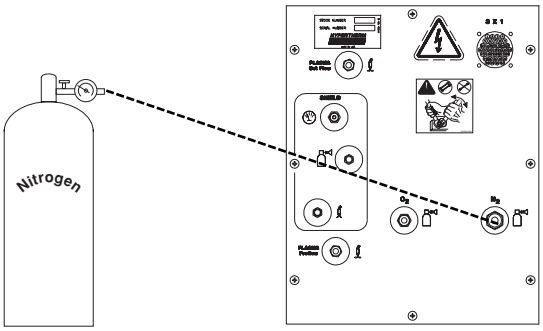

Figure 7-7 Nitrogen Supply to N_2 Input of Gas Console

Section 8

MAINTENANCE

In this section:

Introduction 8-2
Routine Maintenance 8-3
Torch and Torch Leads 8-3
Power Supply 8-3
Gas Console 8-4
Motor Valve Console 8-4
RHF Console 8-5
Startup Sequence 8-5
Initial Checks 8-7
Troubleshooting 8-10
STATUS LED Troubleshooting 8-15
Chopper Module Test Procedure 8-19
Error Codes 8-21
Analog Board LED Functions 8-22
Relay Board LED Function List 8-23
Relay Board LED Status Conditions 8-23
Coolant Flow Test Procedure 8-25
Check Reservoir Coolant 8-25
Verify Flow Rate Return from Torch 8-25
Verify Flow Rate to Torch 8-26
Check Pump, Motor and Solenoid Valve 8-27
Torch Coolant Draining 8-28
Preventive Maintenance Schedule 8-29

Introduction

The HT2000, and all Hypertherm plasma systems, undergo rigorous testing prior to shipment and should require little maintenance if proper installation and operation procedures as outlined in this manual are followed.

After a routine maintenance section, a system initialization sequence of events flowchart is presented. Following the flowchart, an initial checks procedure is then given, followed by a troubleshooting guide to aid in servicing the system, a troubleshooting guide for the STATUS indicators and a chopper checkout procedure. The microcontroller error code listing has also been included as a diagnostic tool. A gas schematic, timing diagram and a complete wiring diagram are also available in **Section 10 Wiring Diagrams**.

It is assumed that the service personnel performing the troubleshooting testing are high-level electronic service technicians that have worked with high voltage electro-mechanical systems. Knowledge of final isolation troubleshooting techniques is also assumed.

In addition to being technically qualified, maintenance personnel must perform all testing with safety in mind. Refer to the *Safety* section for operating precautions and warning formats.

If you need additional assistance or need to order parts, call our Customer Service or Technical Service Group at 1-800-643-9878.

WARNING

SHOCK HAZARD: The large electrolytic capacitor(s) (blue-cased cylinder(s)) store large amounts of energy in the form of electric voltage. Even if the power is off, dangerous voltages exist at the capacitor terminals, on the chopper, and the diode heatsinks. Never discharge the capacitor(s) with a screwdriver or other implement…explosion, property damage and/or personal injury will result. Wait at least five minutes after turning the power supply off before touching the chopper or the capacitor(s).

Routine Maintenance

The system is designed to require little regular maintenance under normal use. The following maintenance checks, are suggested to keep your system in top running condition.

Torch and Torch Leads (See also *Torch Coolant Draining* at the end of this section)

Inspection

Inspect the torch and torch leads on a routine basis.

- The torch consumable parts and torch main body should always be inspected prior to cutting. Worn or damaged parts can cause gas and water leaks which can affect the cut quality. Check for pitting and burn marks on the consumable parts and replace, if necessary. See *Changing Consumable Parts* in **Section 6**.
- Ensure that all connections are tight, but do not overtighten.
- The torch leads should be checked occasionally for cracking and damage.

Power Supply (See also *Torch Coolant Draining* at the end of this section)

Inspection and Cleaning

Inspect the power supply on a routine basis.

- Check the exterior for any damage. If there is damage, ensure it does not affect safe operation of the power supply.
- Remove covers and inspect the interior. Check wiring harnesses and connections for wear and damage. Check for loose connections, and look for areas of discoloration due to overheating.
- At the rear of the power supply, inspect the filter element of the water/coolant sub-assembly. In the event that the filter becomes excessively dirty, torch coolant flow can slow down causing the flow switch to open (turn off) and make the coolant flow interlock status LED illuminate. The filter changes to a brown color when dirty. Replace the filter element (027005) when it starts to turn color.
- Every two weeks, inspect the air filter in the front panel of the power supply by removing the access cover and lifting the filter out. Replace filter (027441) when dirty.
- Every six months, flush power supply of its torch coolant and replace with new coolant (028872). Also replace the water filter (027005) every six months.
- Every six months, clean pump strainer with a mild soap and water solution.
  Note: Remove pump from system before removing strainer to avoid any debris from falling into pump housing. See Fig. 8-0.

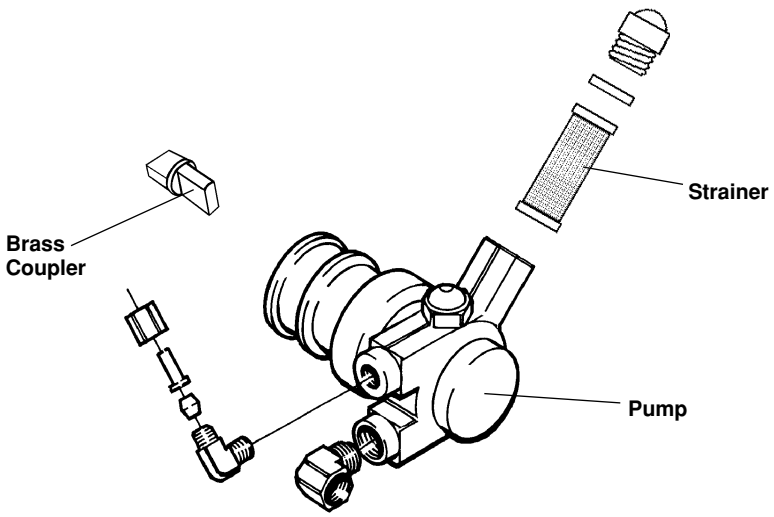

Figure 8-0 Cleaning Pump Strainer

Cleaning

Check the power supply periodically for dust and foreign matter inside the unit.

- Open the cover and blow out the unit with compressed air. It is important to keep the cover closed except when cleaning or when maintenance is being performed.

Gas Console

Inspection

Inspect the gas console on a routine basis.

- Check the exterior for any damage. Look for damaged glass tubes in the flowmeters and check the pressure gauges for damage.
- Inspect all interconnecting cables, hoses and leads for wear and damage. Ensure all connections are tight and that there are no leaks. Do not overtighten fittings.

Cleaning

Keep the flowmeters and pressure gauges free of dirt, dust and foreign matter.

Motor Valve Console

Inspection

Inspect the motor valve console on a routine basis.

- Check the exterior for any damage.
- Inspect all interconnecting cables, hoses and leads for wear and damage. Ensure all connections are tight and that there are no leaks. Do not overtighten fittings.

Cleaning

Check the motor valve console periodically for dust and foreign matter inside the unit.

- Open the cover and blow out the unit with compressed air. It is important to keep the cover closed except when cleaning or when maintenance is being performed.

RHF Console

Inspection

Inspect the RHF console on a routine basis.

- Check the exterior for any damage. If there is damage, ensure that it does not affect safe operation of the console.
- Open the cover and inspect the interior. Check all cables and hoses for wear and damage. Check for loose connections, look for areas of discoloration due to overheating. Check for plumbing leaks.

Cleaning

- Open the cover and blow out the unit with compressed air. It is important to keep the cover closed except when cleaning or when maintenance is being performed.

Startup Sequence

On the following page is a detailed flowchart outlining the startup sequence during proper operation. This flowchart details system functioning from the time the POWER ON button is pushed, up to the ready state (before START button is pushed). Shaded boxes represent action taken by the operator. The timing diagrams in **Section 10** outline the functional sequence of the system after the START command is given.

The following symbols used in the flowchart are ANSI standard flowcharting symbols. Their names and definitions are as follows:

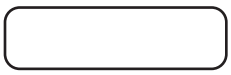

Terminus The terminus is used to indicate the beginning or ending point of a flowchart.

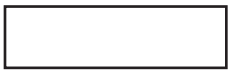

Task/Process The process or task box is used to **Box** indicate any process or task other than an input/output operation or a decision.

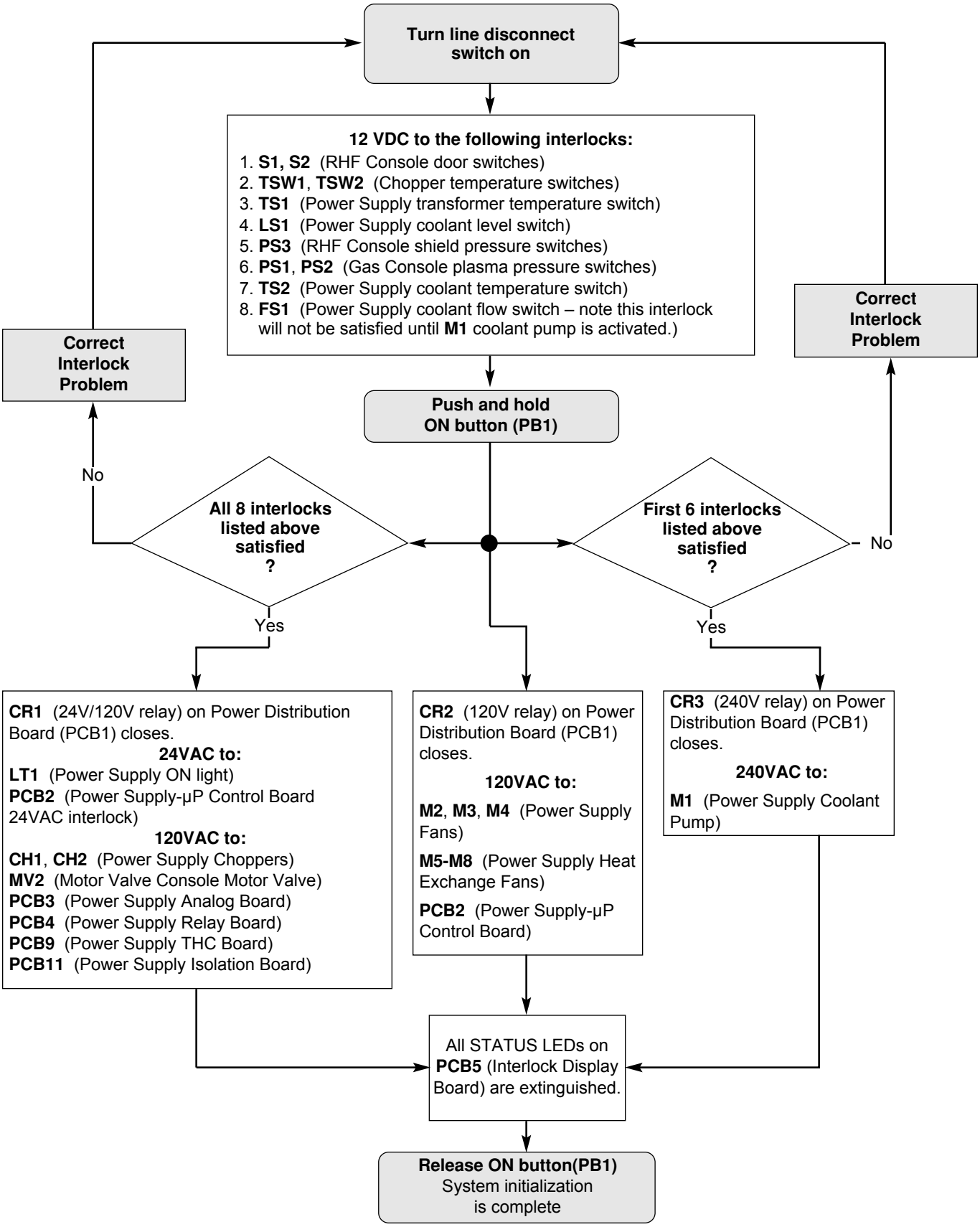
Turn line disconnect switch on
12 VDC to the following interlocks:
1. S1, S2 (RHF Console door switches)
2. TSW1, TSW2 (Chopper temperature switches)
3. TS1 (Power Supply transformer temperature switch)
4. LS1 (Power Supply coolant level switch)
5. PS3 (RHF Console shield pressure switches)
6. PS1, PS2 (Gas Console plasma pressure switches)
7. TS2 (Power Supply coolant temperature switch)
8. FS1 (Power Supply coolant flow switch – note this interlock will not be satisfied until M1 coolant pump is activated.)
Correct Interlock Problem
Correct Interlock Problem
Push and hold ON button (PB1)
No
All 8 interlocks listed above satisfied ?
First 6 interlocks listed above satisfied ?
No
Yes
Yes
CR1 (24V/120V relay) on Power Distribution Board (PCB1) closes.
24VAC to:
LT1 (Power Supply ON light)
PCB2 (Power Supply-µP Control Board 24VAC interlock)
120VAC to:
CH1, CH2 (Power Supply Choppers)
MV2 (Motor Valve Console Motor Valve)
PCB3 (Power Supply Analog Board)
PCB4 (Power Supply Relay Board)
PCB9 (Power Supply THC Board)
PCB11 (Power Supply Isolation Board)
CR2 (120V relay) on Power Distribution Board (PCB1) closes.
120VAC to:
M2, M3, M4 (Power Supply Fans)
M5-M8 (Power Supply Heat Exchange Fans)
PCB2 (Power Supply-µP Control Board)
CR3 (240V relay) on Power Distribution Board (PCB1) closes.
240VAC to:
M1 (Power Supply Coolant Pump)
All STATUS LEDs on PCB5 (Interlock Display Board) are extinguished.
Release ON button(PB1)
System initialization is complete

Initial Checks

Before tracking down specific problems, it is good practice to do a visual check, and verify proper voltages are present at the power source, transformer and power distribution board.

WARNING

SHOCK HAZARD: Always use caution when servicing a power supply when plugged in and the covers are removed. Dangerous voltages exist within the power supply which could cause injury or death.

1. Disconnect line power by turning main disconnect switch off.

2. Using a Phillips head screwdriver, remove top plate, two side plates, front plate, and rear plate.

3. Inspect interior of unit for discoloration on pc boards, or other apparent damage. If a component or module is obviously defective upon visual inspection, remove and replace it before doing any testing. Refer to the *Parts List* section (**Section 9**) to identify parts and part numbers.

4. If no damage is apparent, plug in the power supply unit, and apply power by turning on the main disconnect switch.

5. Measure the voltage at TB1 between L1, L2 and L3. Refer to Figure 8-1 for detail of TB1. The voltage between any two of the three points at TB1 should be equal to your supply voltage (200, 208, 220, 240, 380, 415, 480, or 600VAC). If there is a problem at this point, disconnect main power and check connections, power cable, and fuses at line disconnect switch. Repair and/or replace defective component(s) if necessary.

   For the 220/380/415 – volt CE power supplies, measure the voltage between the U, V and W terminals of TB1 in the EMI filter located on the top of the power supply. Refer to Appendix E. Also refer to the wiring diagram in **Section 10**, if required. The voltage between any two of the three terminals should be equal to the supply voltage (220, 380 or 415 VAC). If there is a problem at this point, disconnect main power and check connections, power cable, and fuses at line disconnect switch. Repair and/or replace defective component(s) if necessary.

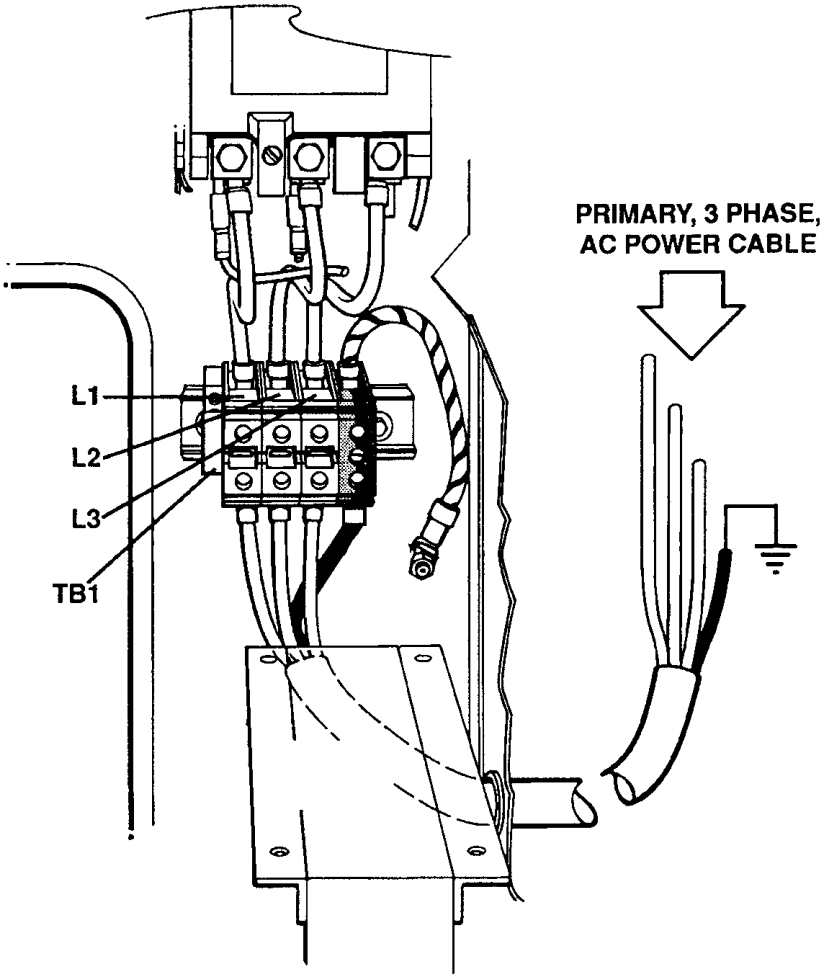

Figure 8-1 Primary Power Measurement Location – HT2000

WARNING

There is line voltage at the contactor after the line disconnect switch is ON, even if the ON (1) pushbutton on the HT2000 power supply has not been pressed. Use extreme care when measuring primary power in this area. Voltages present at the terminal block and contactor can cause injury or death!

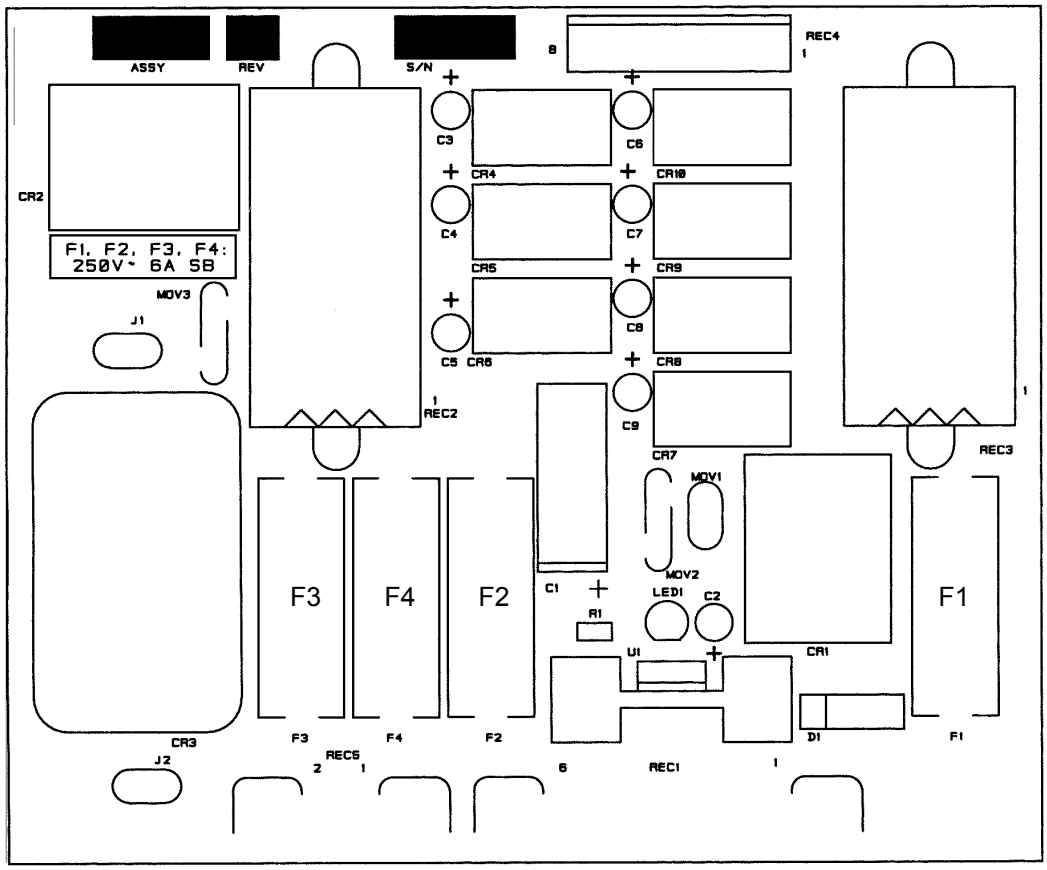

Figure 8-2 Power Distribution Board PCB1

6. Measure voltage at Power Distribution Board PCB1. Refer to Figure 8-2 for detail of PCB1. Look on the board for fuses F1- F4. Measurements between each fuse and chassis ground should be as follows:

F1:	24VAC
F2:	120VAC
F3:	240VAC
F4:	120VAC

If voltages are not present, or incorrect at one or more of these points, disconnect power and troubleshoot PCB1 fuses and associated pins, connectors and wiring between power distribution board connector REC1 and transformer secondary T1. Refer to Figure 9-4 for location of T1.

Also, check main power circuit breaker CB1 located in Figure 9-4, and associated wiring and connections between T1 and points L1 and L2 (including linkboard).

Repair and/or replace defective component(s) if necessary.

Troubleshooting

The troubleshooting section is presented by following normal operational sequence.

Before troubleshooting for specific problems, be sure that unit passes *Initial Checks* as outlined earlier in this section.

WARNING

SHOCK HAZARD: Always use caution when servicing a power supply when the covers are removed. Dangerous voltages exist within the power supply which could cause injury or death. If questions or problems arise during servicing, call the Hypertherm Technical Services Department at 1-800-643-9878.

Problem	*Possible Causes* / Solutions
1. The green POWER ON pushbutton switch PB1 is pressed, but the fans are not operating and the green POWER ON indicator does not illuminate.	**1.1.** *The green POWER ON (1) PB1 pushbutton is defective.* Check that switch is operating correctly, and that good contact is being made. The POWER ON switch is normally open. **1.2.** *The red POWER OFF (0) PB2 pushbutton is defective.* Check that switch is operating correctly, and that good contact is being made. The POWER OFF switch is normally closed. **1.3.** *Associated wiring not making good contact.* Check wiring and repair or replace, if necessary.
2. The green POWER ON pushbutton switch PB1 is pressed, the POWER ON indicator illuminates, but the fans are not running.	**2.1.** *CR2 on the power distribution board is defective.* Check that CR2 switches when POWER ON pushbutton is pressed. See Figure 8-2 for location of CR2. If CR2 is defective, replace PCB1. **2.2.** *Connector from power distribution board is not seated securely.* Check pins, connectors and associated wiring for good continuity. Repair or replace, if necessary.

Problem	*Possible Causes* / Solutions
3. The green POWER ON pushbutton switch PB1 is pressed, the fans are operating, but the green POWER ON indicator does not illuminate.	**3.1.** *Pushbutton PB1 was not held down for a long enough period of time.* Press and hold PB1 for a minimum of 5 seconds. **3.2.** *Relay CR1 on the power distribution board is defective.* Check that CR1 switches when POWER ON pushbutton is pressed. See Figure 8-2 for location of CR1. If CR1 is defective, replace PCB1. **3.3.** *One or more of the STATUS LEDs remains illuminated, indicating a fault condition.* To troubleshoot STATUS fault conditions, see *Status LED Troubleshooting* later in this section.
4. The green POWER ON indicator is illuminated, the START command is given and DC ON indicator is illuminated, but there is no high frequency and no pilot arc.	**4.1.** *There is no spark between the spark gap electrodes.* Clean (with emery cloth), align and reset the electrode gaps to .020" (0.51 mm), if necessary. The electrode surfaces between the gaps should be flat. If surfaces are rounded, replace and reset the gap. See Figure 9-12 for part number information. • Inspect the high voltage transformer T1 in the RHF console for overheating. See Figure 9-11 for location of T1. Replace T1 if overheating. • Check for 120VAC at T1 after START command is given. Note that door interlock switches S1 and S2 have to be closed in order to pass the START sequence. Switches will close in both IN position, and if pulled OUT. • If there is <u>no</u> 120VAC at T1, use wiring diagrams in **Section 10** and check pins, connectors and associated wiring from T1 to relay board PCB4. If connections are OK, there may be a problem with either PCB4 or PCB2. See sheet 4 of 13 in **Section 10** for location of the relay that controls RHF transformer T1.

Problem	*Possible Causes* / Solutions
	• If there is 120VAC at T1, shut down system and remove RHF capacitors C3 and C4. (See Figure 9-12 for location of C3 and C4) Restart system and see if a faint spark is now observed across the gaps. • If a spark is not observed at the gaps, replace T1. If there is a spark, shut down system, and replace capacitors C3 and C4. **(Always replace the capacitors in pairs).**
	4.2. *There is no high frequency at the torch.* Check for a shorted torch, a damaged pilot arc lead, or loose lead connections. Replace the torch or pilot arc lead or tighten the lead connections.
5. The green POWER ON indicator is illuminated, the torch START command is given and the DC ON indicator illuminates, and there is high frequency, but there is no pilot arc.	**5.1.** *Pilot arc relay CR1 is not closing (not getting 120VAC from the relay board PCB4).* See if the CR1 relay contacts close after the START command is given. See Figure 9-8 for location of CR1. If CR1 does not close: • With an AC voltmeter across the relay, see if 120VAC is coming from PCB4 after START command is given. • If there is no 120VAC, check connectors, terminals, pins, and associated wiring to PCB4. • If wiring is OK, there is a problem either with PCB4 or PCB2. See **Section 10** for location of the relay that controls pilot arc relay CR1.
	5.2. *Pilot arc relay CR1 is defective.* If there is 120VAC across the relay (see above steps), and CR1 does not close, replace CR1.
	5.3. *Main contactor (CON1) or PCB4 is defective.* • With an AC voltmeter, see if contactor CON1 is getting 120VAC after START command is given.

Problem	*Possible Causes* / Solutions
	If there is no 120VAC, check pins, connectors and associated wiring from CON1 to PCB4. • If wiring is OK, PCB4 or PCB2 may be defective. See **Section 10** for location of the relay that controls main contactor CON1. • If CON1 is getting 120VAC from the relay board as described above, measure the voltage between secondary terminals of main transformer T2 after the START command is given. See Figure 9-3 for location of T2. The voltage between any two of the three points connected to each chopper should be equal to 200VAC. If there is no voltage at any of the above points, replace CON1. If there is voltage at some but not all of the above points, check wiring and connections to and from T2. If wiring checks out OK, return to *Initial Checks* section and repeat steps 1-5.
	5.4. *Choppers are defective or not functioning.* See *Chopper Module Test Procedure* later in this section.
6. The unit stops cutting during cut, or cuts poorly.	**6.1.** *The work cable is not connected or it is broken.* Connect or repair the work cable.
	6.2. *Arc not transferring to workpiece.* Check work cable connection to workpiece. Good contact must be made in order for the arc to transfer.
	6.3. *There is insufficient air or gas pressure.* Check gas inlet pressure and the plasma and shield gas pressures in TEST and RUN modes as specified in the *Cut Charts.*
	6.4. *Torch is getting insufficient current.* Check the arc current setting in the *Cut Charts* for the type and thickness of metal you are cutting.

Problem	*Possible Causes* / Solutions
	6.5. *The power supply has overheated.* Shut down system and wait for unit to cool down. If power supply will not restart, see *Status LED Troubleshooting* guide later in this section.
	6.6. *Choppers are defective or not functioning.* See *Chopper Module Test Procedure* later in this section.

Status LED Troubleshooting

Be certain that the power supply has been through the *Initial Checks* as outlined earlier in this section before troubleshooting STATUS LEDs.

When any one of the STATUS LEDs illuminates, there is a fault condition that must be corrected in order for the power supply to become operational.

See **Section 10 Wiring Diagrams** in this manual for reference.

Problem	*Possible Causes* / Solutions
1. INTERLOCK LED illuminated: 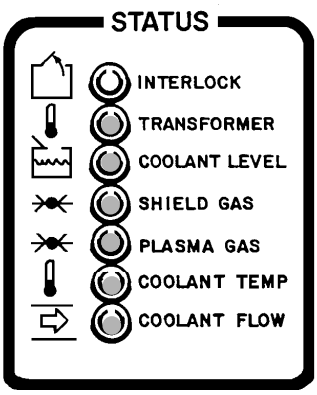	**1.1** *Door(s) to Remote RHF Console not completely shut.* This LED will extinguish when switches S1 and S2 located in the RHF console are closed. The switches will close when the RHF console doors are closed. If the doors are closed, check pins, connectors and associated wiring for good continuity from receptacle 1X1 to 2X1. Repair and/or replace defective component(s), if necessary.
2. TRANSFORMER LED illuminated: 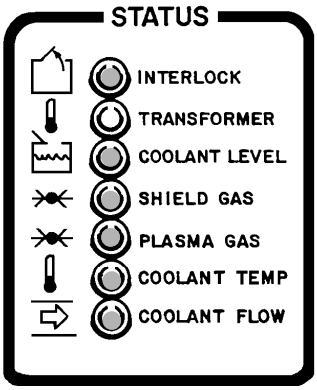	**2.1.** *Main Transformer T2 or one of the choppers is overheating.* This LED will extinguish when the main transformer (T2) is operating in a normal temperature range (under 165° C) and choppers CH1 and CH2 are also operating in a normal temperature range (under 82°C). • Check temperature switches (normally closed). • Check pins, connectors and associated wiring to temperature switches. • Leave the fans running, and try restarting the unit after one hour. If LED still illuminates, one of the choppers or the main transformer may need to be replaced.

Problem	*Possible Causes* / Solutions
3. COOLANT LEVEL LED illuminated: 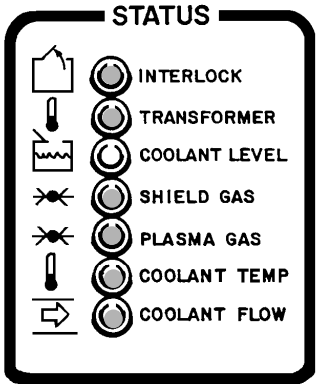	**3.1.** *Coolant level is low.* This LED will extinguish when a proper coolant level in the coolant reservoir is maintained. Level switch LS1 is located in the coolant reservoir, and will open when it senses that coolant level is too low. • Check coolant level. • If coolant level is adequate, check to see if LS1 switch is closed. • Check connections and associated wiring from LS1 to PCB1. Repair and/or replace defective component(s), if necessary.
4. SHIELD GAS/CAP LED illuminated: 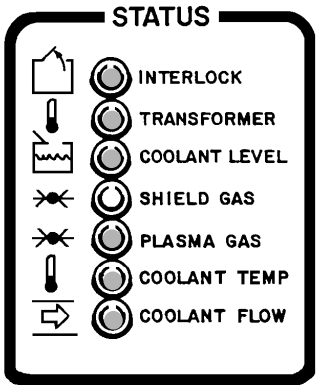	**4.1.** *Shield gas pressure too low.* This LED will extinguish when shield gas pressure of 12 psi (0.83 bar) or greater is sensed by PS3 (located in the RHF console). • Check to see that shield gas supply is set according to the *Cut Charts* in this manual. • Verify that all shield gas connections are secure, and that there are no leaks in any hoses connected to the RHF console or gas console. **4.2.** *Torch cap not tightened securely.* If the torch retaining cap is not tightened securely, or there is debris in the retaining cap, shield gas may escape and cause pressure switch PS3 to remain open. • Listen at the torch for a hissing sound during startup. • Remove retaining cap and check for debris or O-ring damage. Clean or replace, if necessary. See *Changing Consumable Parts* in the **Operation** section. **4.3**. *Pressure switch PS3 in RHF console not functioning.* PS3 is normally open, and closes when shield gas pressure is 12 psi (0.83 bar) or greater.

Problem	*Possible Causes* / Solutions
	• Using wiring diagrams, check pins, connectors and associated wiring from REC3 on the power distribution board (PCB1) to PS3. Repair and/or replace defective component(s), if necessary.
5. PLASMA GAS LED illuminated:	**5.1.** *Plasma gas pressure too low.* This LED will extinguish when PS1 and/or PS2 in the gas console senses plasma gas pressure of 80 psi (5.5 bar) or greater. • Verify that plasma gas supply is set to 120 psi (8.3 bar) as defined in **Section 2** of this manual. • Verify that all plasma gas connections are secure, and that there are no leaks in any hoses connected to the gas console. **5.2.** *Pressure switches PS1 and/or PS2 not functioning.* These switches are normally open, and close when plasma gas pressure is at or above 80 psi (5.5 bar). After PS1 and PS2 are closed (in O_2 mode) or PS1 is closed (in N_2 mode), the **PLASMA GAS** LED extinguishes. • Using the wiring diagrams, check pins, connectors and associated wiring from the power distribution board (PCB1) to PS1 and PS2. Repair and/or replace defective component(s), if necessary.
6. COOLANT TEMP LED illuminated:	**6.1.** *Coolant too hot.* This LED will extinguish when temperature switch TS2 senses that the temperature of coolant in the coolant reservoir is under 160°F (71°C). • Check to see if water coolant is above 160°F. • Check to see if TS2 (located in the coolant reservoir) is open. TS2 is normally closed, and is opened when a temperature above 160°F (71°C) is reached.

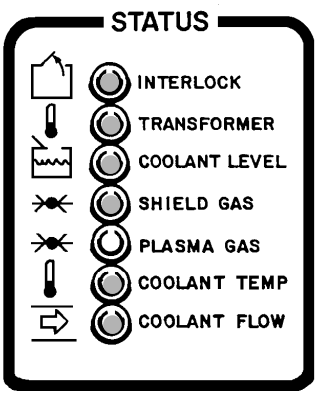

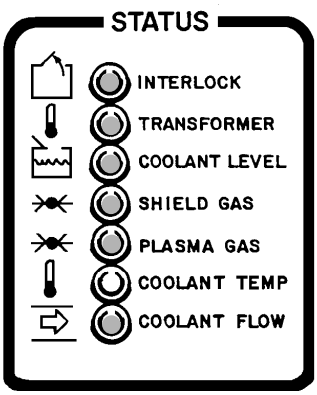

Problem	*Possible Causes* / Solutions
	• Using the wiring diagrams, check pins, wires and connections from TS2 to PCB1. Repair and/or replace defective component(s), if necessary.
7. COOLANT FLOW LED illuminated: 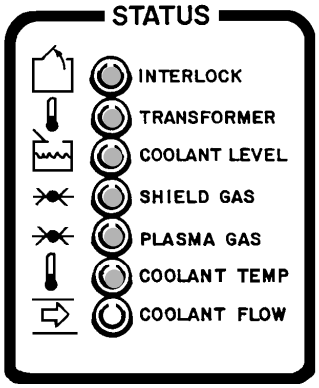 	**7.1.** *Coolant flow restricted.* This LED will extinguish when flowswitch (FS1) senses a coolant flow of at least 0.5 gpm (1.9 l/m) to the torch. FS1 is a normally open switch that closes when a flow greater than 0.5 gpm is sensed. See *Coolant Flow Test Procedure* later in this section to troubleshoot coolant flow problems. Note: Coolant flow LED illuminates when line disconnect switch is turned ON because coolant reservoir pump M2 is not activated until the power supply POWER ON (PB1) is pressed.

Chopper Module Test Procedure

Note: Take voltages with a digital multimeter capable of storing min. and max. readings.

WARNING

SHOCK HAZARD: Use extreme care when working near the chopper modules. The large electrolytic capacitor(s) (blue-cased cylinder(s)) store large amounts of energy in the form of electric voltage. Even if the power is off, dangerous voltages exist at the capacitor terminals, on the chopper, and the diode heatsinks. Never discharge the capacitor(s) with a screwdriver or other implement...explosion, property damage and/or personal injury will result.

1. Turn all power to the HT2000 OFF.
   Disconnect mating receptacles in the RHF console to disable the high frequency transformer T1. See Figure 9-11 for location of T1.
   Note: RHF console door must be re-shut before attempting to start system.

2. Remove large fuses F1 and F2. Check to see if fuse(s) is (are) open.

3. Place the positive lead to the **+** side of the bridge and the negative lead to the **–** side of the bridge. See Figure 8-3. Note that actual connection points are hidden by cap support bracket in Figure 8-3.

4. Turn power to the HT2000 ON, and start system up. After the START command has been given, check voltage. The input to the chopper at these points should be about +280 VDC. If the input is OK and corresponding fuse F1 or F2 was blown, replace the chopper module.
   If there is no +280 VDC input, check input to bridge for shorts. Also, check contactor (CON1), connections and associated wiring to the contactor. Repair and/or replace defective component(s) if necessary.

5. If voltage from above step is +280 VDC and corresponding fuse is not blown, check output of CH1 by placing the positive lead of the voltmeter at point + WORK on the chopper module (wire #48A) and negative lead at point - TORCH (wire #39A). (Check output of CH2 by placing leads of voltmeter at the corresponding points on the other chopper module.)

6. Turn the system on and press the START command. After the START command has been given, check the voltage. If the output from each chopper at these points is +280 VDC, then choppers are OK.

7. If the chopper does not output +280 VDC, check to see if LED1 logic power light is on. If LED1 is not on, check if 120V is going to JP6. If there is no 120V at JP6, check wiring back to power distribution board. Repair or replace defective component(s), if necessary.

Also check to see if LED3 is turning green when enabled (normal condition). If LED1 is on and LED3 is red when enabled (fault condition), then make sure that JP9 is seated properly.

8. If chopper still does not output 280V after completing step 7, there may be a problem with the control signal or the chopper module. The chopper drive signal comes through the analog board PCB3 as an analog level from 0 to +8 VDC, which varies the duty cycle and subsequent output current of the chopper. These analog signals are on pins 3&4 REC1 of PCB3 for CH1, and 5&6 REC1 for CH2.

   To determine if there is a problem with the chopper modules or with control board PCB2 or analog board PCB3, proceed as follows:

   - Ensure that high frequency is still disabled (see step 1).
   - Disconnect PL3.1 from REC1 on PCB3.
   - Place voltmeter across output of chopper and press the START command.
   - If the voltmeter reads +280 VDC, then replace either control board PCB2 or analog board PCB3.
   - If the voltmeter reads 0 volts, then replace corresponding chopper module CH1 or CH2.

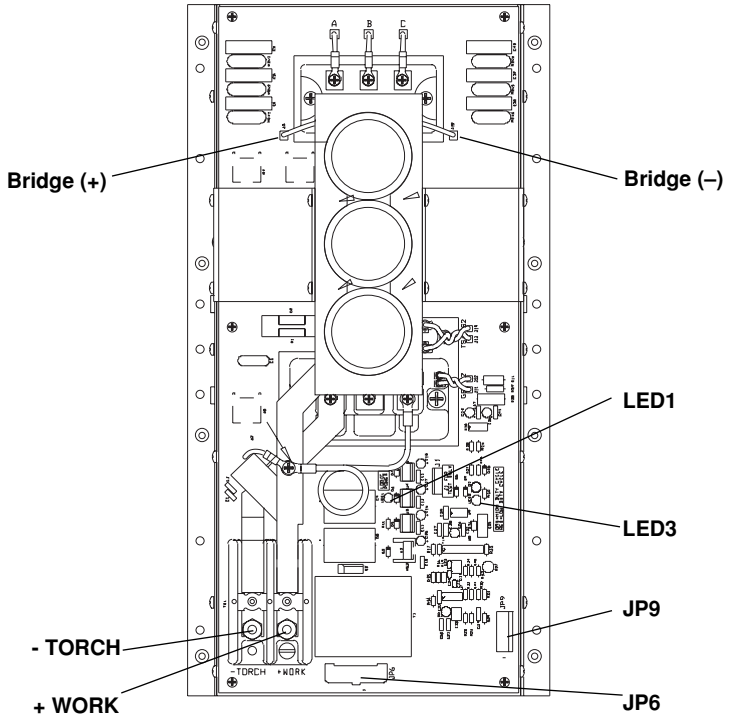

Figure 8-3 Chopper Module – Front View

Error Codes

The microcontroller on control board PCB2 will alert the user when certain errors occur in the system, by flashing the **ERROR CODE** LED on the control board. The power supply front cover must be removed to observe control board PCB2 and the **ERROR CODE** LED (see Figure 9-1 for location of PCB2 and Figure 8-4 for location of **ERROR CODE** LED on PCB2).

The **ERROR CODE** LED will blink on for .5 seconds and off for .5 seconds with a two second gap before repeating the blinking sequence. The number of blinks between the two second gap is one of ten error indications listed on the following page.

During the error code flashing, all outputs from the control board are turned off, and the power supply is in an idle mode. After the error is corrected, you may resume operation of the system.

Note: Eight or nine blinks will occur during normal operation.
If the **ERROR CODE** LED remains on without blinking, this indicates that a microcontroller internal RAM or ROM self-check error has occurred (power supply will hang up).

For troubleshooting purposes, the PLASMA START LED is also shown in Figure 8-4. When lit, this LED indicates that the plasma START command has been received at the control board.

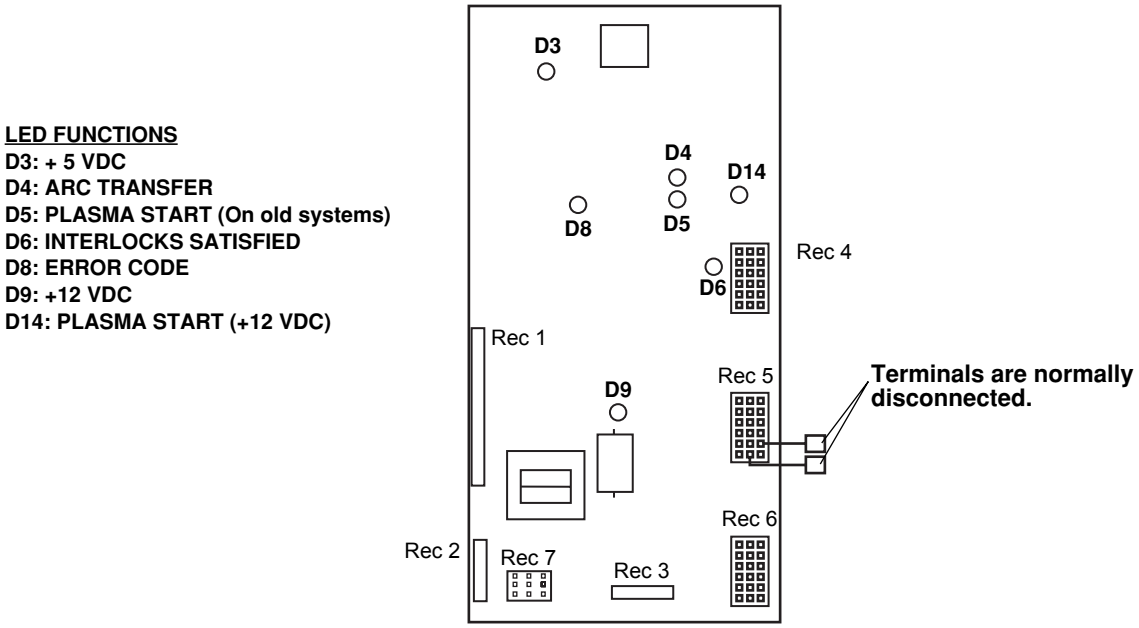

Figure 8-4 Control Board (micro-processor) Error Code LED Location

Number of blinks	Explanation
1	Indicates that the IHS Complete signal has not been returned within 30 seconds after the plasma START command has been given.
2	Indicates that an "interlock" error has occurred.
3	Indicates that the HOLD input (for multi-torch systems) was not released within 30 seconds after the end of preflow.
4	Indicates that there was no transfer within 300ms.
5	Indicates that transferred current arc was lost during ramp up.
6	Indicates that the current was lost from chopper #1 (CH1).
7	Indicates that the current was lost from chopper #2 (CH2).
8	Indicates that transferred current arc was lost during ramp down.
9	Indicates that the software has an error.
10	Indicates that the input voltage has dropped below 15% of the nominal value. Eg: Input voltage for a 480V power supply drops below 408V.

Figure 8-5 Error Codes

Analog Board LED Functions

D3: +12VDC
D4: Chopper Current CH2
D6: Chopper Current CH1

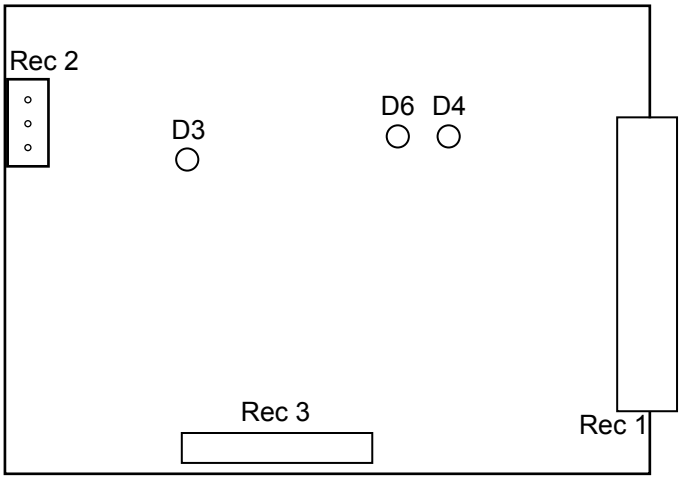

Relay Board LED Function List

D6: +12VDC
D7: CR1
D8: SV1A
D9: Ramp-down error
D10: SV5
D11: SV4B
D12: SV4A
D13: T1
D14: Con1
D15: LT1/LT2
D16: SV1B
D17: SV2
D18: SV3
D19: SV7
D20: Output Enable
D22: Spare
D24: Machine Motion
D26: Spare
D28: SV6

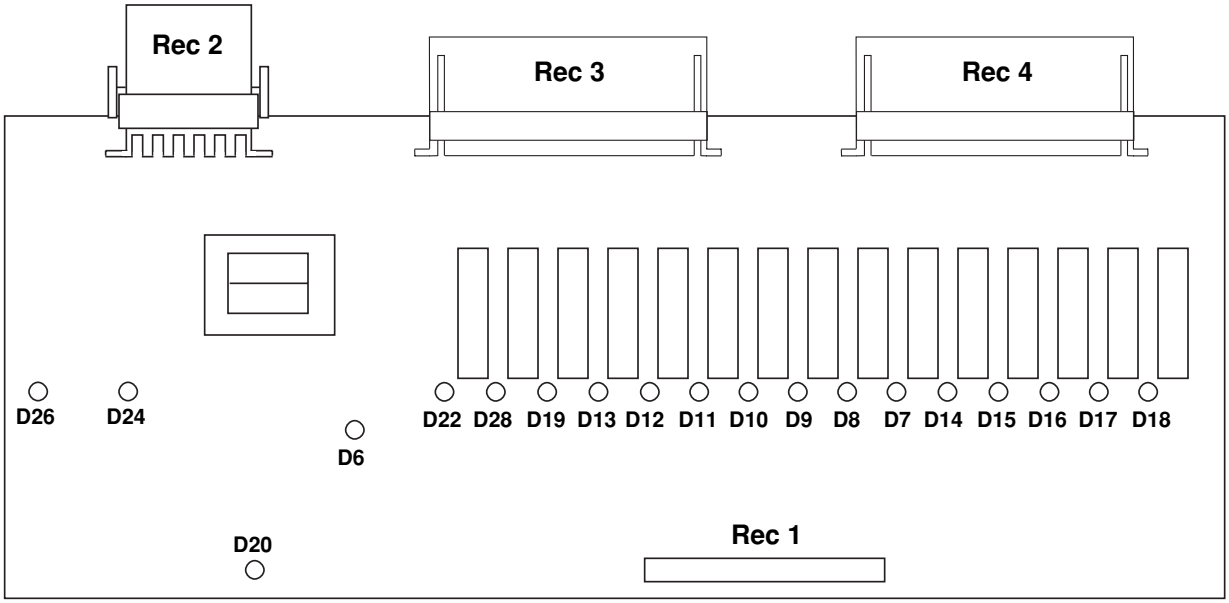

Relay Board LED Status Conditions

(The following LEDs are illuminated during the conditions shown)

Idle

D6: +12VDC
D8: O_2 Solenoid Valve (SV1A), if in O_2 Mode
D16: N_2 Solenoid Valve (SV1B), if in N_2 Mode
D19: Cap Sense Solenoid Valve (SV7)
D20: Output Enable
D26: Spare

Test Preflow

D6: +12VDC
D8: O_2 Solenoid Valve (SV1A), if in O_2 Mode
D10: Plasma Off-Valve Solenoid Valve (SV5)
D11: Preflow Solenoid Valve (SV4B)
D19: Cap Sense Solenoid Valve (SV7)
D20: Output Enable
D26: Spare
D28: Shield Gas Solenoid Valve (SV6)

Relay Board LED Status Conditions (continued)

(The following LEDs are illuminated during the conditions shown)

Test Cutflow

D6: +12VDC
D8: O_2 Solenoid Valve (SV1A), if in O_2 Mode
D10: Plasma Off-Valve Solenoid Valve (SV5)
D12: Cutflow Solenoid Valve (SV4A)
D16: N_2 Solenoid Valve (SV1B), if in N_2 Mode
D19: Cap Sense Solenoid Valve (SV7)
D20: Output Enable
D26: Spare
D28: Shield Gas Solenoid Valve (SV6)

Run Preflow

D6: +12VDC
D7: Pilot Arc Relay (CR1)
D8: O_2 Solenoid Valve (SV1A), if in O_2 Mode
D10: Plasma Off-Valve Solenoid Valve (SV5)
D11: Preflow Solenoid Valve (SV4B)
D14: Main Contactor (CON1)
D15: DC ON Lights (LT1/LT2)
D16: N_2 Solenoid Valve (SV1B), if in N_2 Mode
D17: N_2 Preflow Solenoid Valve (SV2)
D18: O_2 Preflow Solenoid Valve (SV3)
D19: Cap Sense Solenoid Valve (SV7)
D20: Output Enable
D26: Spare
D28: Shield Gas Solenoid Valve (SV6)

Run Cutflow

D6: +12VDC
D8: O_2 Solenoid Valve (SV1A), if in O_2 Mode
D10: Plasma Off-Valve Solenoid Valve (SV5)
D12: Cutflow Solenoid Valve (SV4A)
D14: Main Contactor (CON1)
D15: DC ON Lights (LT1/LT2)
D16: N_2 Solenoid Valve (SV1B), if in N_2 Mode
D19: Cap Sense Solenoid Valve (SV7)
D20: Output Enable
D24: Arc Transfer
D26: Spare
D28: Shield Gas Solenoid Valve (SV6)

Coolant Flow Test Procedure

	WARNING
Push OFF (0) button on power supply and turn main disconnect switch OFF before proceeding.	

If the COOLANT FLOW Status LED illuminates, verify that the proper flow is maintained by following the troubleshooting sequence outlined in this procedure:

Check Reservoir Coolant

1. Shut off power supply (see warning above).
2. Remove the torch coolant reservoir cap.
3. Remove the power supply rear cover.
4. Verify that the reservoir is full of coolant. Add coolant, if necessary.

Verify Flow Rate Return from Torch

1. Find a clean one-gallon container.
2. Locate the two coolant hoses that come off of the cathode block at the rear of the power supply (black hoses: one with a green tape band and one with a red tape band - See Fig. 8-6).
3. Remove the torch coolant return hose (black hose with the red band) from the cathode block.

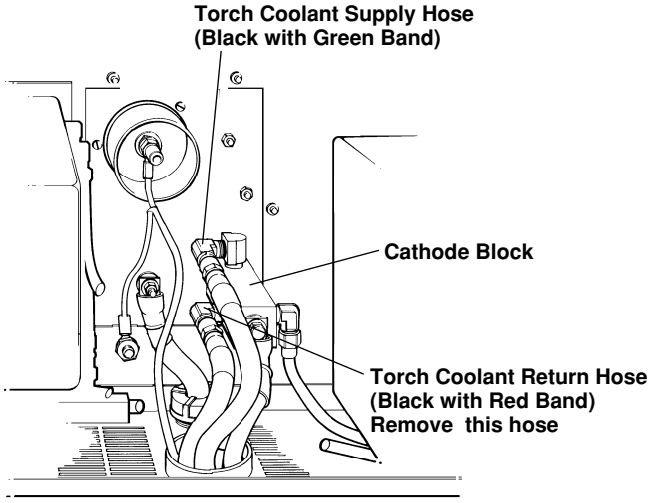

Figure 8-6 Torch Coolant Supply and Return Hoses

4. Place the red banded hose into the one-gallon container.

5. Turn the power supply power back on.

6. Hold down the ON (I) button on the power supply.

7. Start timing for 30 seconds, and then release the button.

8. Verify that the container is 1/2 full. If not 1/2 full, repeat this test and time discharge for 1 minute. After 1 minute verify that the container is at least 3/4 full.

8.1. If the one-gallon container is less than 3/4 full after step 8, go to *Verify Flow Rate to Torch*.

8.2. If the one-gallon container is at least 3/4 full after step 8, the problem is either with the flow switch or the particulate filter.

- Remove filter element and re-connect coolant hose to cathode block on the rear of the power supply.
- Start power supply. If COOLANT FLOW LED remains illuminated, replace the flow switch. If the LED does not illuminate, replace filter element.

Verify Flow Rate to Torch

1. Push power supply OFF (0) button and place main disconnect switch to OFF position (see warning on previous page).

2. Remove the torch consumables.

3. Replace only the retaining cap on the torch. (Do not replace the electrode, nozzle and swirl ring back in the torch.)

4. Place the empty one-gallon container under the torch.

5. Turn the power back on and press and hold down the power supply ON (I) button.

6. Start timing for 1 minute. The torch should deliver at least 1 gallon of fluid in 1 minute.

7. If the torch delivers at least 1 gallon of fluid per minute, then flow rate to torch is OK. Replace torch. If torch does not deliver at least 1 gallon of fluid per minute, go to *Check Pump, Motor, and Solenoid Valve (V1)*.

8. If replacing the torch does not satisfy the flow switch, then replace torch leads.

Check Pump, Motor and Solenoid Valve (V1)

1. If coolant is not flowing, check to see if motor and valve V1 are getting 240VAC. Note: The 240VAC relay (CR3) on PCB1 will not close until the first five (5) interlocks (STATUS) indicators are satisfied. (See *Startup Sequence* flowchart)

2. If motor, pump and valve all seem to be functioning and the flow is not sufficient, replace the pump and motor assembly.

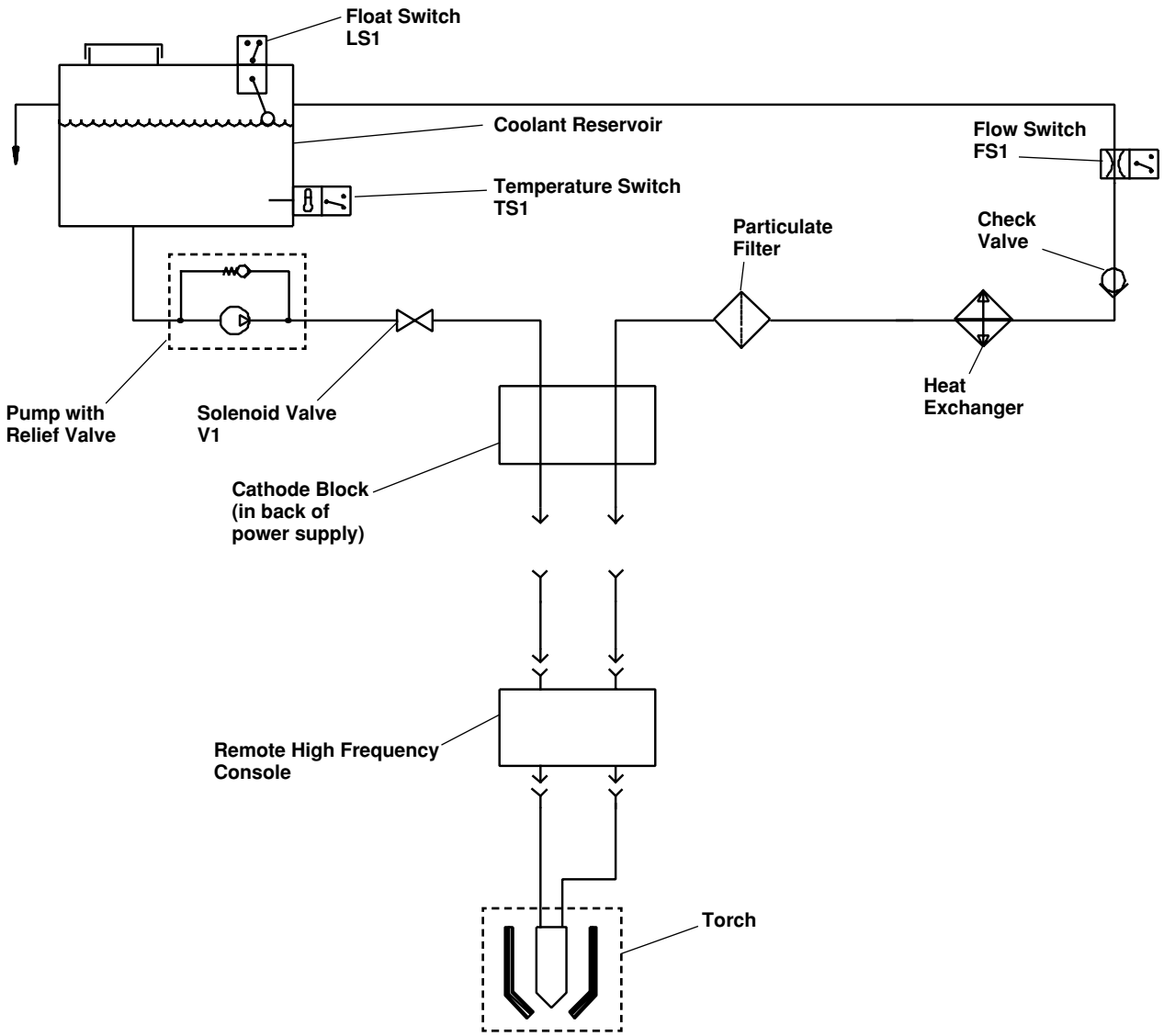

Figure 8-7 Plumbing Schematic of Power Supply Reservoir Assembly with RHF Console and Torch

Torch Coolant Draining

Hypertherm recommends draining the torch coolant from the power supply and torch before transporting the system. After this draining procedure, a small amount of coolant will remain in the system pump and valves. For this reason, Hypertherm also recommends that a suitable ratio of propylene glycol be purged through the system prior to draining if the system will experience extremely cold temperatures. Note that Hypertherm's stock propylene glycol solution 028872 is rated to 10° F (-12° C).

1. Disconnect all power to the system.

2. Remove the fill inlet cap from the reservoir to allow proper venting.

3. Drain the power supply reservoir by opening the petcock on the bottom of the reservoir tank. Close petcock after coolant is drained. See Fig. 8-8. On older systems, there is either no petcock, or the petcock is in a different position than the one shown in the figure below. Siphon coolant out of the tank through the fill inlet if there is no petcock.

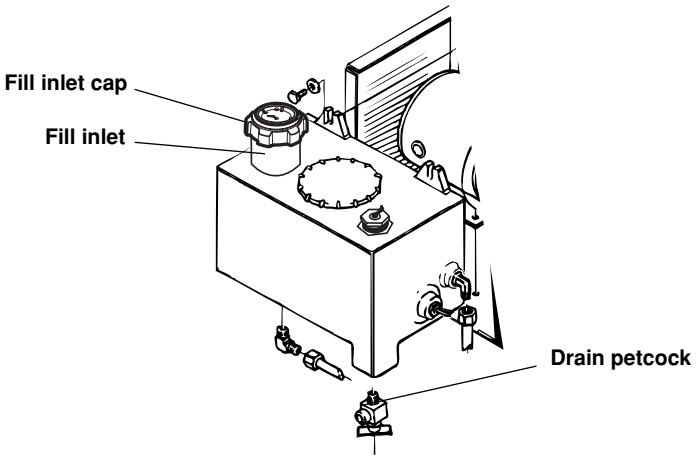

Figure 8-8 Coolant Tank Reservoir Drain Petcock Location

4. Ensure that the torch and consumables are installed and connected to the power supply.

5. Disconnect the torch coolant supply hose (black hose with the green band) from the rear of the power supply. See Fig. 8-6.

6. Blow clean, dry, oil-free air at 80-120 psi (5.5-8.3 bar) into the torch coolant supply hose until coolant ceases to flow into the reservoir.

7. Drain or siphon remaining coolant from the reservoir as in step 3.

8. Unscrew the coolant filter housing from the rear of the power supply. See Fig. 9-10 for location of filter housing.

9. Empty coolant from the filter housing.

10. Screw coolant filter housing back into the rear of the power supply.

Preventative Maintenance Schedule Year_____

Daily:

- ☐ Verify proper inlet gas pressure -- See Instruction Manual, *Specification* section
- ☐ Verify proper gas flow settings -- **Mandatory at every consumable change** -- See Instruction Manual, *Operation* section
- ☐ Verify proper coolant pressure and temperature -- **Water Chillers only** -- See Instruction Manual, *Specification* section
- ☐ Replace consumables as needed, and inspect torch

Weekly: Date Completed:

	Jan	Feb	March	April	May	June	July	Aug	Sept	Oct	Nov	Dec
Week 1												
Week 2												
Week 3												
Week 4												
Week 5												

- ☐ Clean power supply with dry, oil free compressed air, or vacuum
- ☐ Verify cooling fans are working properly
- ☐ Clean torch threads and current ring
- ☐ Verify proper coolant level

Monthly: Date Completed:

Jan	Feb	March	April	May	June	July	Aug	Sept	Oct	Nov	Dec

- ☐ Inspect for loose wire connections
- ☐ Inspect contacts on main contactor for wear
- ☐ Inspect pilot arc relay for pitting
- ☐ Verify proper operation of coolant flow switches
- ☐ Perform coolant flow test
- ☐ Check gas console packing nuts for tightness
- ☐ Perform gas leak test
- ☐ Inspect cable connections

Bi-Annually: Date Completed:

Service 1_____ Service 2_____

- ☐ Drain coolant system -- See Instruction Manual, *Maintenance* section
- ☐ Replace coolant filter element - See Instruction Manual, *Maintenance* section
- ☐ Replace coolant with genuine Hypertherm coolant

Annually: Date Completed:_____

- ☐ Replace pilot arc relay
- ☐ Replace main contactor

Hypertherm, Inc. 8/28/00

Section 9

PARTS LIST

In this section:

Introduction 9-2
System Parts Diagram 9-2
Power Supply
- Front Panel 9-5
- THC Assembly 9-5
- Control Panel 9-6
- Base Plate and Components 9-7
- Center Wall Right Side 9-9
- Center Wall Left Side 9-11
- Front Wall Inside 9-13
- Rear Wall Inside 9-15
- High Frequency and I/O PCB 9-17
- Rear Wall Outside 9-19

Remote High Frequency Console 9-21
- Spark Gap Assembly 9-23

Gas Console 9-25
Motor Valve Console 9-27
Remote V/C – Digital Remote (DR) Control Station 9-29
Remote V/C – Programmable (PR) Control Station 9-31
IHS Console 9-33
Argon-Hydrogen Console 9-34
Timer/Counter 9-35
HySpeed HT2000 Machine Torch with 2" Sleeve 9-37
HySpeed HT2000 Stainless Steel Machine Torch 9-37
Torch Mounting Bracket 9-37
HySpeed HT2000 Machine Torch with 1-3/4" Sleeve 9-39
Torch Mounting Bracket 9-39
Torch Leads, Leads, Cables, and Hoses 9-40
Consumable Parts Kits 9-50
Lead Packages 9-54
- Power Supply to Remote High Frequency Console – Cables and Hoses 9-54
- Remote High Frequency Console to Gas Console - Hoses 9-54
- Gas Console to Motor Valve Console – Hoses 9-54

Recommended Spare Parts 9-55
- Power Supply 9-55
- Remote High Frequency Console 9-55
- Gas Console 9-56
- Motor Valve Console 9-56

Introduction

The format to list and call out Hypertherm parts is as follows:

Item	Part Number	Description	Designator	Qty.
	129118	**Chopper SA, 15KW, HT2000**	**CH1**	1
1	001232	Bracket, HT2000 Chopper Module		2
35	**041118**	**PC BD Assy Snubber**	**PCB1**	**1**

Item: Refers to item call out on same or opposing page.
Number (Ex. 1) refers to numbered call out ① on same or opposing page.

Part Number: Refers to Hypertherm part numbers.
Bold part numbers (Ex. **029320**) signify parent or subassemblies that contain additional items.
Normal-style part numbers (Ex. 001232) signify items that may or may not be under a parent or subassembly.

Description: Describes the item.
Bold descriptions not indented (Ex. **Chopper SA, 15KW, HT2000**) signify parent assemblies that contain additional items.

Normal-style part numbers that are indented (Ex. Bracket, HT2000 Chopper Module) signify items under parent or subassembly. In this example, parent is **Chopper SA, 15KW, HT2000**.

Bold descriptions that are indented (Ex. **PC BD Assy Snubber**) represent subassemblies that are under a parent assembly.

Designator: Represents a cross reference to wiring diagrams or pneumatic diagrams.
(Ex. **CH1** refers to chopper assembly CH1 shown in wiring diagrams)

Note: When referencing components to the wiring diagrams in Section 10, designations may appear to be repeated. Ex: C1 appears on sheet 2 of 13 in the wiring diagrams in two separate locations. Sections of the power supply on that page are outlined with a dotted box and a label. Within different sections, the same designation may appear. Be certain to check the dotted box label when looking for or cross-referencing HT2000 parts.

Qty.: Refers to the number of items in the parent or subassembly.

System Parts Diagram

On the following page is a system parts diagram with reference numbers to system components, cabling, and hosing. To locate a part, find the system component reference number in the diagram, and find the same reference number in the parts list. Components with many parts (such as the HT2000 power supply) are additionally broken down to major components and subassemblies.

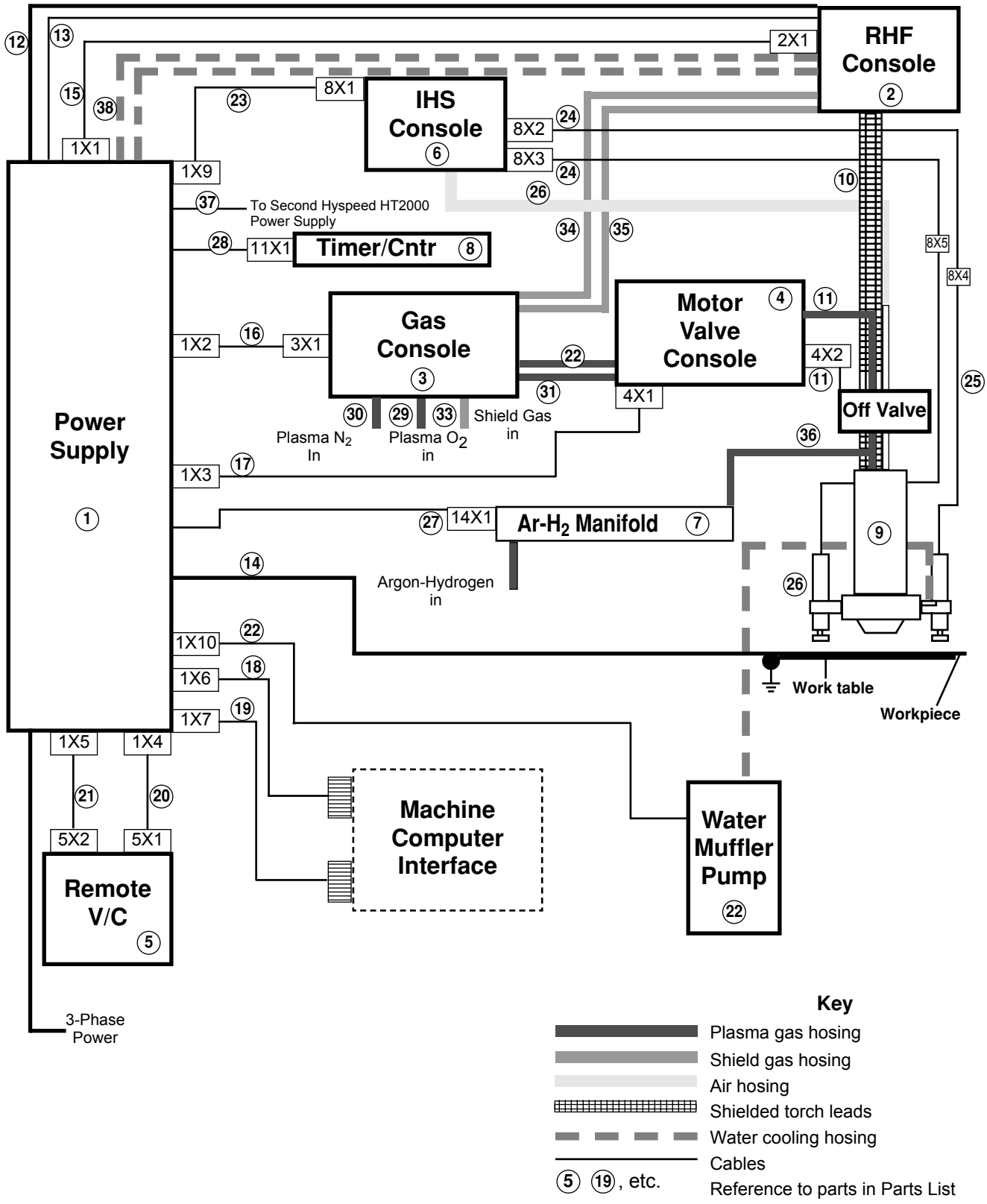

Figure 9-0 HT2000 System Parts Diagram with IHS and Water Muffler

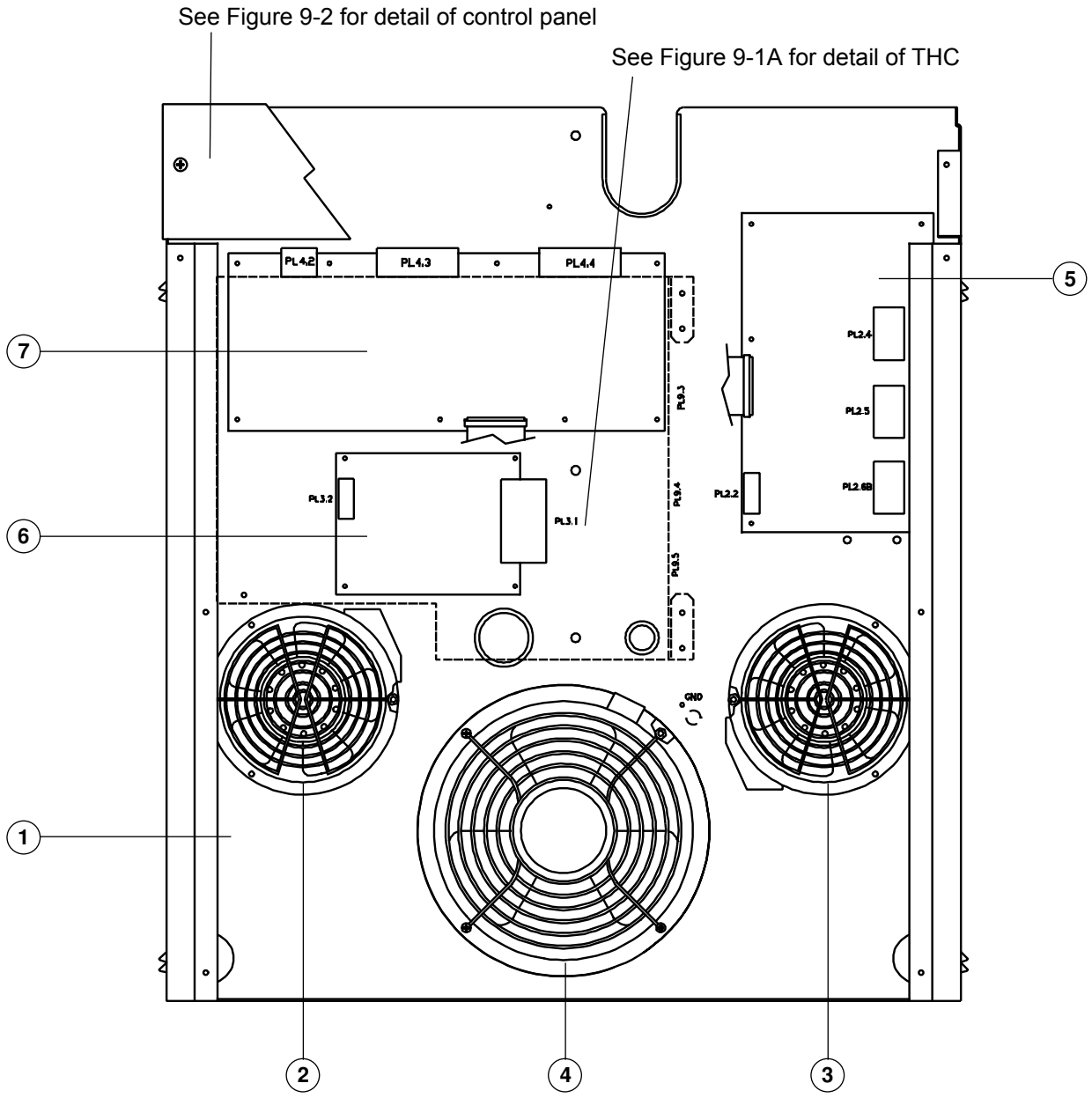

Figure 9-1 HT2000 Power Supply – Front Panel

HT2000 Power Supply ① : Front Panel

Item	Part Number	Description	Designator	Qty.
1	001233	Panel, HT2000 Front		1
2	**129307**	**Fan SA:225CFM**	**M3**	1
	027080	Fan:225CFM 120VAC 50-60HZ		
	027568	Fan Guard:6.375 Dia		
3	**129307**	**Fan SA:225CFM**	**M2**	1
	027080	Fan:225CFM 120VAC 50-60HZ		
	027568	Fan Guard:6.375 Dia		
4	**129308**	**Fan SA:450-550CFM**	**M4**	1
	027079	Fan:450-550CFM 120VAC 50-60HZ		
	027567	Fan Guard:8.75 Dia		
5	**041762**	**PCB Assy: HT2000 Control II**	**PCB2**	**1**
6	**041276**	**PCB Assy: HT2000 Anlg**	**PCB3**	**1**
7	**041246**	**PCB Assy: Relay, HD1070 / HT2000**	**PCB4**	**1**
	001566*	Panel:HT2000 Front Filter		1
	001567*	Cover:HT2000 Front Filter Panel		1
	027441*	Filter:24 X 24 X 2 Fiberglass air		1

* Items not shown in Figure 9-1

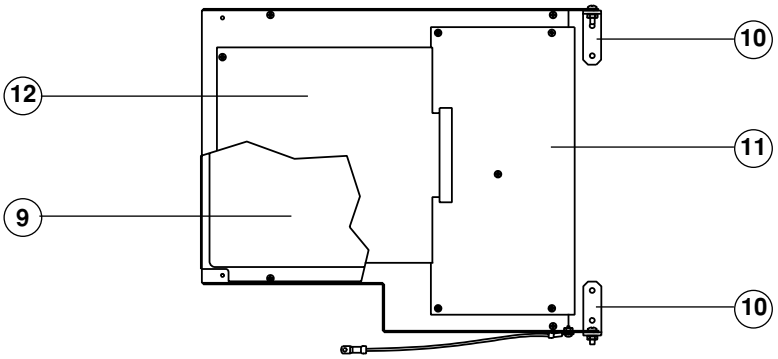

Figure 9-1A HT2000 Power Supply – THC Assembly

HT2000 Power Supply ① : THC Assembly (optional)

Item	Part Number	Description	Designator	Qty.
	029697	**HT2000 THC SA**		
9	001297	Cov: HT2000 THC Dust		1
10	004338	Hinge - THC Pan, HT2000		2
11	**041294**	**PCB Assy: HT2000 THC Mother**	**PCB9**	**1**
12	**041186**	**PCB Assy: HT2000 Torch Hght Cntrl**	**PCB10**	**1**

HT2000 Power Supply ① : Control Panel

Item	Part Number	Description	Designator	Qty.
	029646	**Contr Pnl SA, HT2000**		**1**
1	001301	Pnl :HT2000 Cont		1
2	005151	Lamp holder		1
3	005149	Bulb, 120VAC	**LT2**	1
4	005089	Lens:White for 005088		1
	041536	**PC BD Assy Intlk Dsply 200/4001**	**PCB5**	**1**
5	008516	Post Header, 8-pin RA MTA-156		1
6	008517	Spcr, .19 OD .12 ID .50 LG		7
7	009063	Diode, Ind LED Amber		7
8	041535	PC BD only Intlck Dsply 200/1070		1
9	005121	Pushbutton, 2 NO Green Illumin	**PB1/LT1**	1
10	005122	Pushbutton, 2 NC Red Extended	**PB2**	1

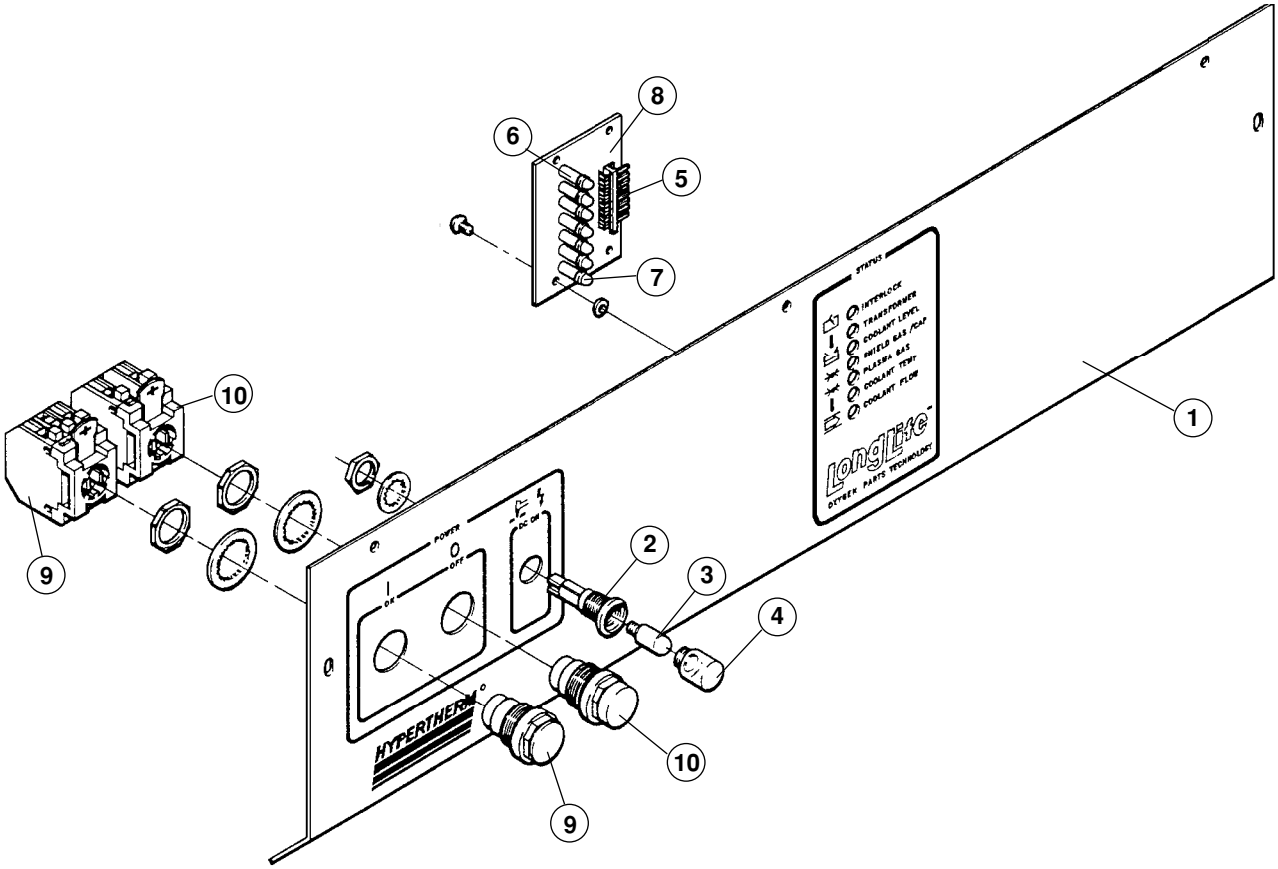

Figure 9-2 HT2000 Power Supply – Control Panel

HT2000 Power Supply ① : Base Plate and Components

Item	Part Number	Description	Designator	Qty.
1	001229	Base, HT2000		1
2	014078*	Transf'mer 30KW 240-480/3/60	**T2**	1
2	014097**	Transf'mer 30KW 208/3/60	**T2**	1
2	014088***	Transf'mer 30KW 220-380-400-415/50	**T2**	1
2	014111****	Transf'mer 30KW 200V/3PH/50Hz	**T2**	1
2	014082*****	Transf'mer 30KW 600/3/60	**T2**	1
2	014158******	Transf'mer 30KW 440-460V/3PH/50-60Hz	**T2**	1
3	005102	Thermostat, 160°C, 6 Amp	**TS1**	1
4	014080	Inductor, 4mh 100A	**L1**	1
5	014080	Inductor, 4mh 100A	**L2**	1
6	075241	M/S, 1/4-20 X1/2,SL, IHW, S/Z		4
7	075199	Flwshr, 1/2, .532, 1.06, .099, S/Z		4
8	075242	M/S, 1/4-20 X 3/4, SL, IHW, S/Z		1

* Used on 240-480V power supplies
** Used on 208 volt power supplies
*** Used on 220/380/415 volt power supplies and 400V CE power supplies
**** Used on 200 volt power supply
***** Used on 600 volt power supplies
****** Used on 440/460 volt power supplies

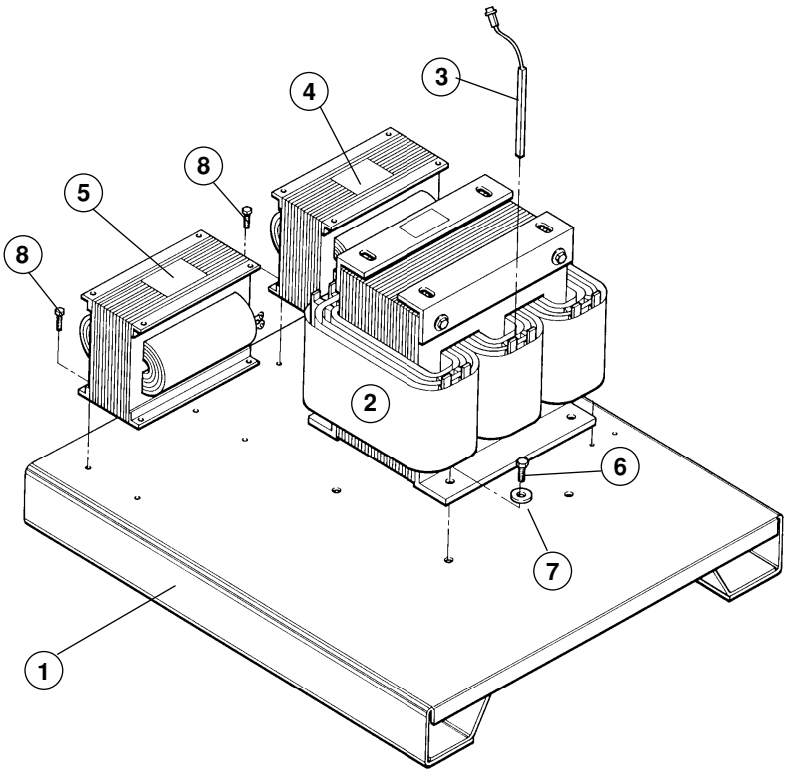

Figure 9-3 HT2000 Power Supply – Base Plate and Components

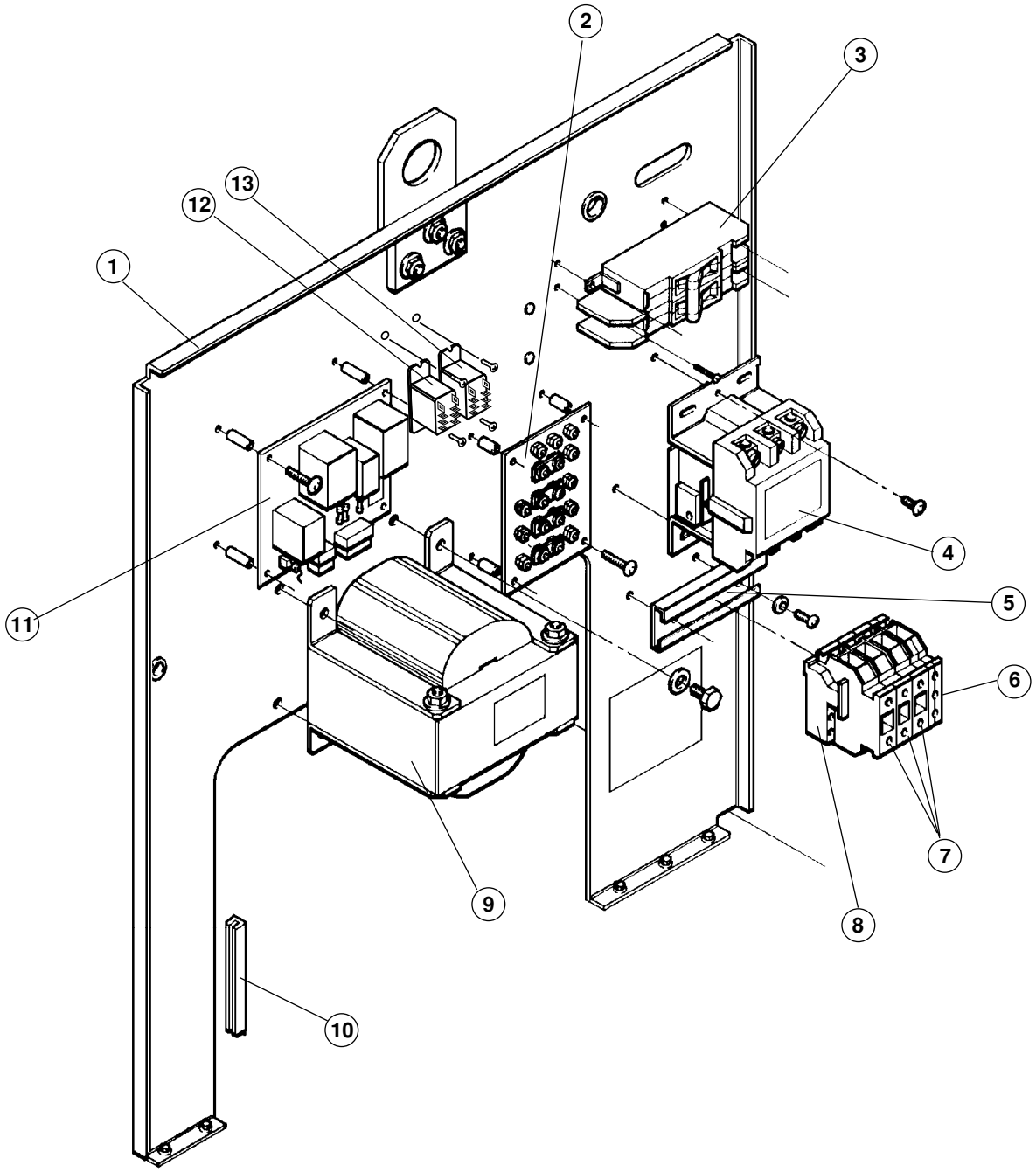

Figure 9-4 HT2000 Power Supply – Center Wall Right Side

HT2000 Power Supply ① : Center Wall Right Side

Item	Part Number	Description	Designator	Qty.
1	001230	Panel, MAX200 Center		1
2	**029359***	**Linkboard SA, MAX200 240-480V**		**1**
3	003138	Circuit Breaker, 2 Pole, 600V 20A	**CB1**	1
4	003139	Contactor:90A 3P 120VAC	**CON1**	1
	029316†	**Incoming Power TB1 SA, MAX200**	**TB1**	**1**
5	004290	Rail, 400E TB12/200 TB1		1
6	008358	Terminal Block		1
7	008485	Terminal Block		3
8	008295	Holder, E/UK Term Blk End		1
9	**029318***	**Cont Transf'mer SA 240-480/3PH/60**	**T1**	**1**
9	**029441****	**Cont Transf'mer SA 208/3/60**	**T1**	**1**
9	**029362*****	**Cont Transf'mer SA 220-380-400-415/50**	**T1**	**1**
9	**029422******	**Cont Transf'mer SA 200V/3PH/50Hz**	**T1**	**1**
9	**029404********	**Cont Transf'mer SA 600/3/60**	**T1**	**1**
9	**029713**********	**Cont Transf'mer SA 440-460/3/50-60**	**T1**	**1**
10	008481	Grommet Strip. Panel		18"
11	**041534††**	**PC BD Assy, Power Distribution**	**PCB1**	**1**
12	003142	Relay, 120 VAC DPDT	**CRA**	1
13	003142	Relay, 120 VAC DPDT	**CRB**	1
	001601†††	Plate:CE/LVD Lift Eye		1
	001602†††	Gasket:CE/LVD Lift Eye		1

* Used on 240/480 volt power supplies

** Used on 208 volt power supplies

*** Used on 220/380/415 volt power supplies and 400V CE power supplies

**** Used on 200 volt power supply

***** Used on 600 volt power supplies

****** Used on 440/460V power supplies

† See Appendix E for location of 029316 on 400V CE power supplies.

†† See Figure 8-2 for front graphic of 041534 power distribution board.

††† Not shown graphically in Figure 9-4.

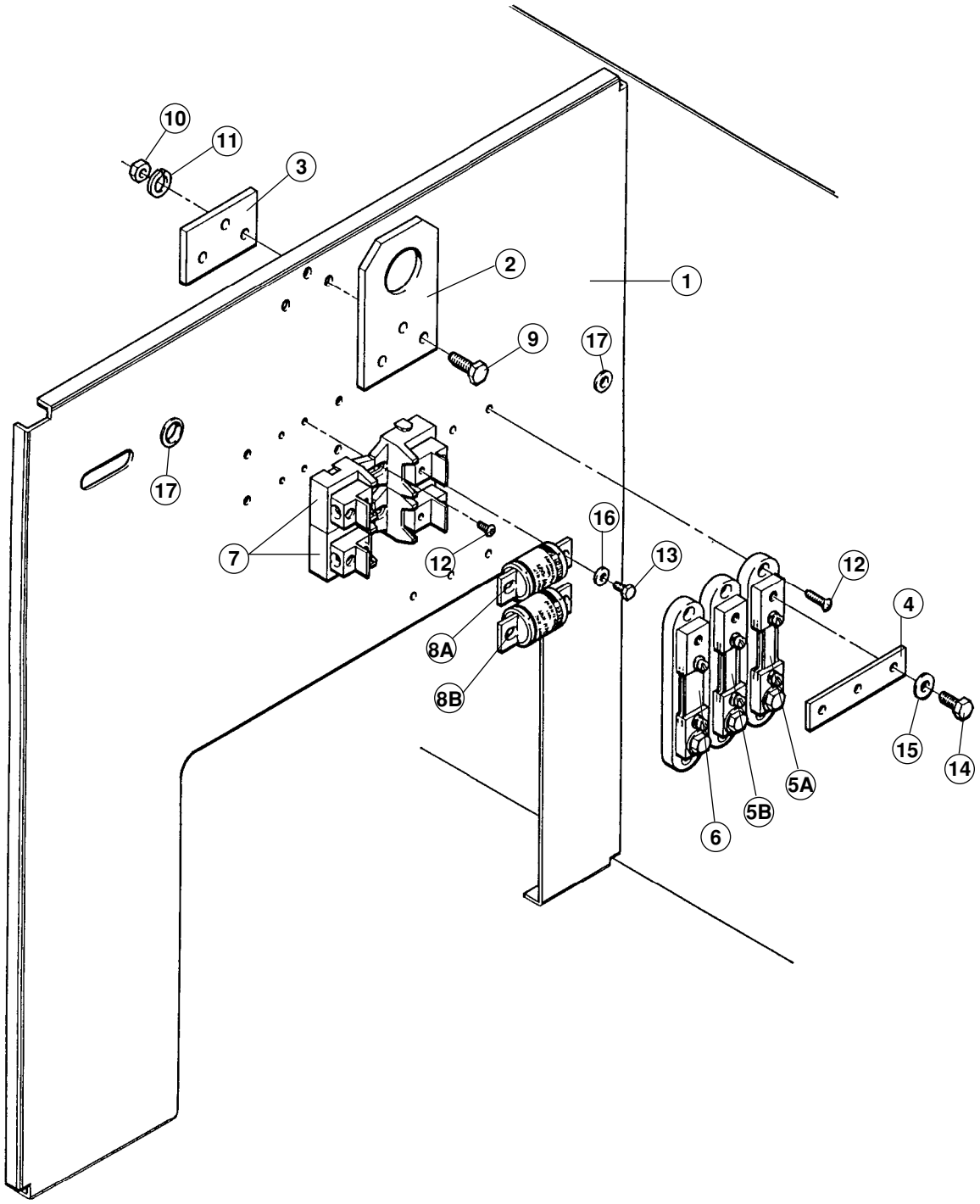

Figure 9-5 HT2000 Power Supply – Center Wall Left Side

HT2000 Power Supply ① : Center Wall Left Side

Item	Part Number	Description	Designator	Qty.
1	001230	Panel, HT2000 Center		1
2	004261	Bar, Lift, MAX100 & 80		1
3	004262	Plate, Lift, MAX100 & 80		1
4	004334	Busbar, HT2000 Shunt		1
5A	007022	Shunt, 100A, 100mv	**R2**	1
5B	007022	Shunt, 100A, 100mv	**R1**	1
6	007024	Shunt, 200A, 100mv	**R3**	1
7	008945	Fuseholder, 100A		2
8A	008317	Fuse, Semiconductor 125A, 250V	**F1**	1
8B	008317	Fuse, Semiconductor 125A, 250V	**F2**	1
9	075137	Hhdcap, 3/8-16 X 1 1/4, Hex, S/Z		3
10	075166	Hexnut, 3/8-16, S/Z		3
11	075194	Lkwshr, 3/8, Splitlock		3
12	075092	M/S, 10-32 X 1/2, PH, Pan		10
13	075241	M/S, 1/4-20 X 1/2, SL, IHW		4
14	075136	Hhdcap, 3/8-16 X 3/4, Hex, S/Z		3
15	075216	Flwshr, 5/16		3
16	075192	Lkwshr, 1/4, Splitlock		4
17	008245	Bushing, 7/8" hole X 11/16" ID		2

See Figure 9-6A for detail of item 2 (CH2), right side.

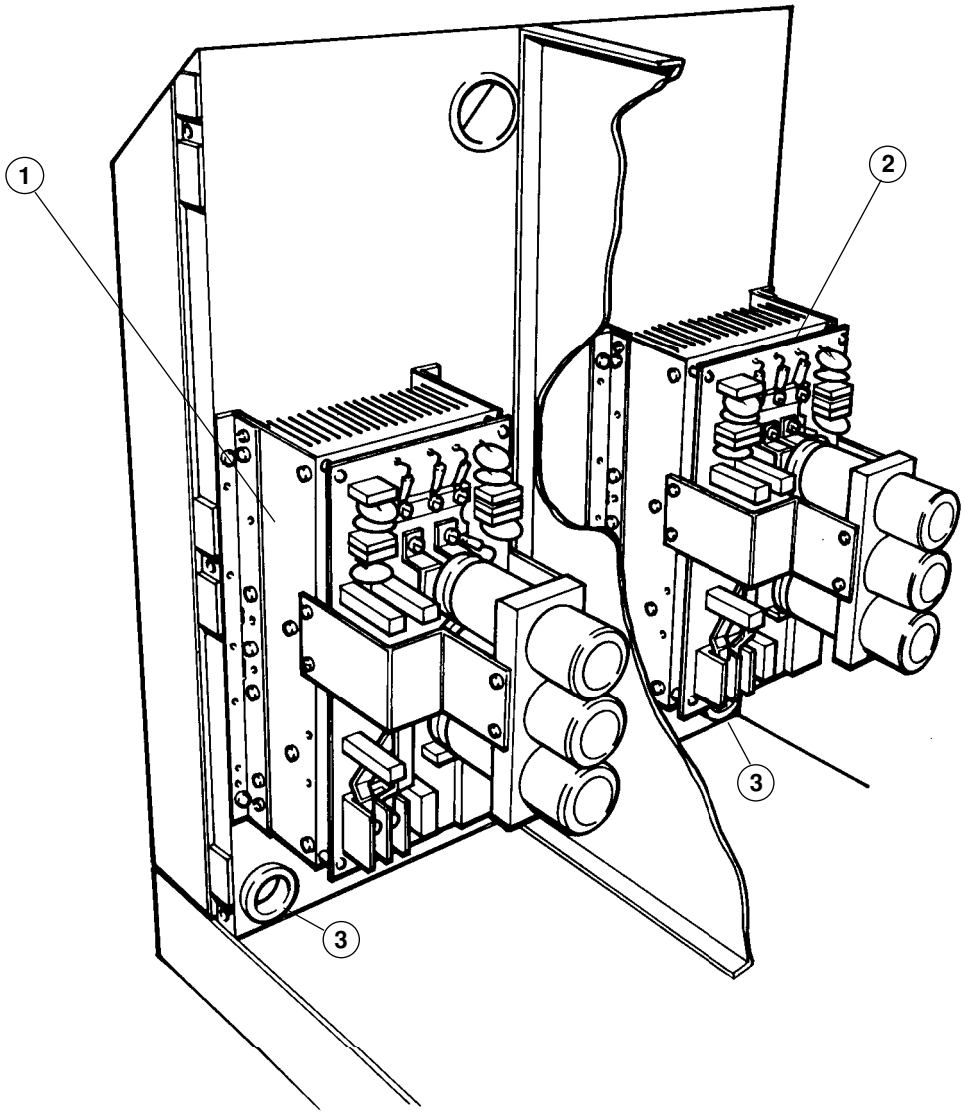

Figure 9-6 HT2000 Power Supply – Front Wall Inside

HT2000 Power Supply ① : Front Wall Inside

Item	Part Number	Description	Designator	Qty.
1	**129118**	**CH130 CE/LVD Chopper SA**	**CH1**	**1**
	005199	Temperature Switch 82°C	**TSW1**	1
2	**129118**	**CH130 CE/LVD Chopper SA**	**CH2**	**1**
	005199	Temperature Switch 82°C	**TSW2**	1
3	008509	Bushing 1.75 MTG X 1.37 ID		3
4	**041564**	**PCB Assy:Phase Loss Detection Circuit**		1

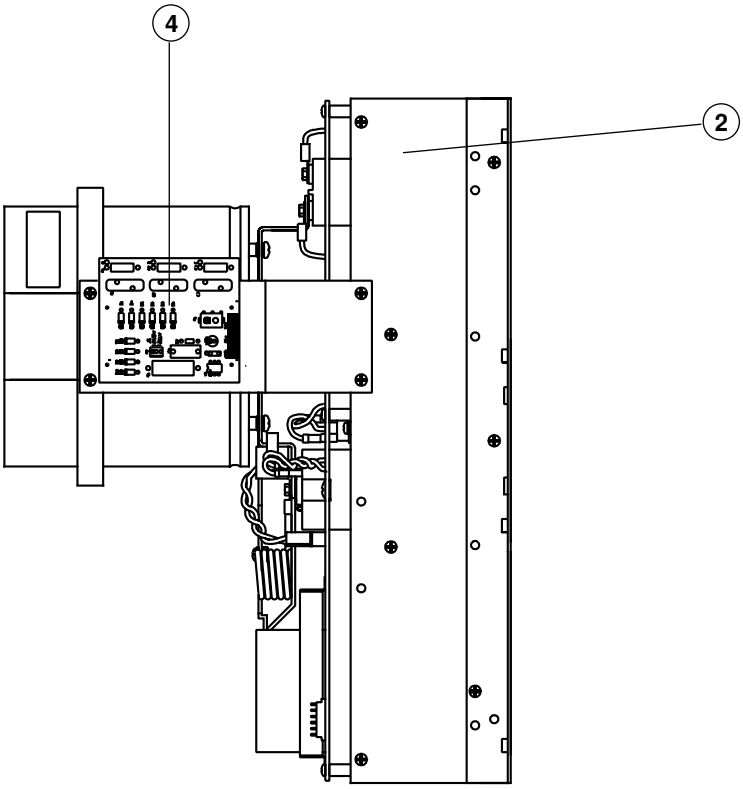

Figure 9-6A Chopper CH2 – Right Side

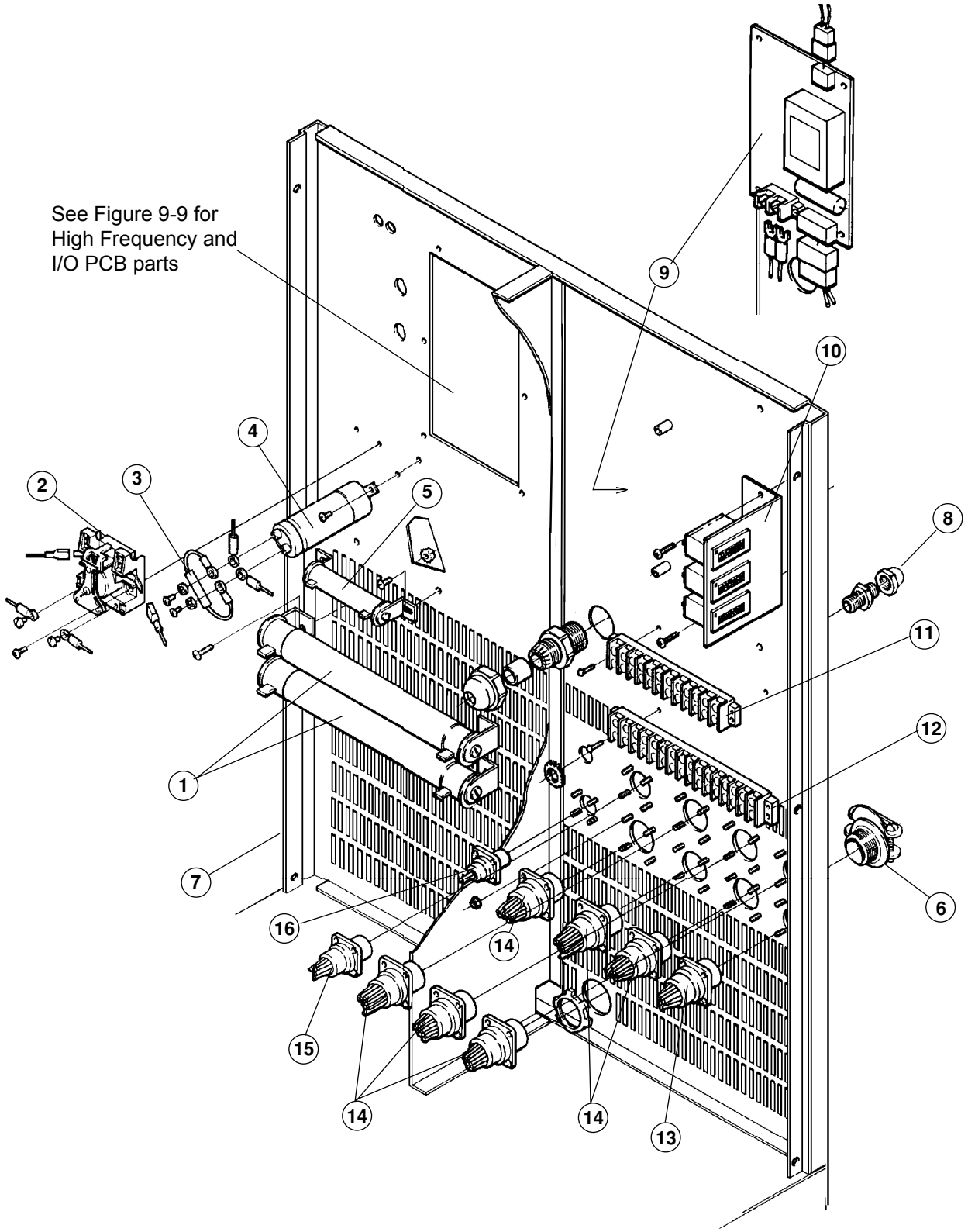

Figure 9-8 HT2000 Power Supply – Rear Wall Inside

HT2000 Power Supply ① : Rear Wall Inside

Item	Part Number	Description	Designator	Qty.
1	009684	Res: 4 Ohm 420W w/bracket	**R6A,R6B**	2
2	003021	Relay, 120VAC NO SPST	**CR1**	1
3	009015	Res: 10K Ohm, 10W	**R5**	1
4	009506	Cap: 250µF, 350VDC	**C1**	1
5	009438	Res: 5 Ohm, 50W	**R4**	1
6	008610	Strain Relief, 1-1/2 NPT, 1.5 ID 2 Screw		1
7	001378	Panel, HT2000 Rear		1
8	008500	Strain Relief, 1/2 X .125-.375		1
9	**041274**	**PC BD Assy, ISO**	**PCB11**	1
10	**028666**	**Timer/Counter**		1
	004545	Bracket		1
	027274	Counter, Self Powered		2
	027275	Meter, Elapsed Time		1
	003140	Relay; 120VAC		2
	009204	Capacitor		3
	029645	**Harness SA HT2000**		
11	008079	Terminal Strip (8)	**TB4**	1
12	008073	Terminal Strip (16)	**TB3**	1
13	008447	Receptacle, 23-37, Std Sex	**1X6, 1X5**	2
14	008208	Receptacle, 23-37, Rev Sex	**1X1,1X2, 1X3 1X7, 1X4**	5
15	008201	Receptacle, 17-14, Rev Sex	**1X9**	1
16	008210	Receptacle, 11-4, Rev Sex	**1X10**	1

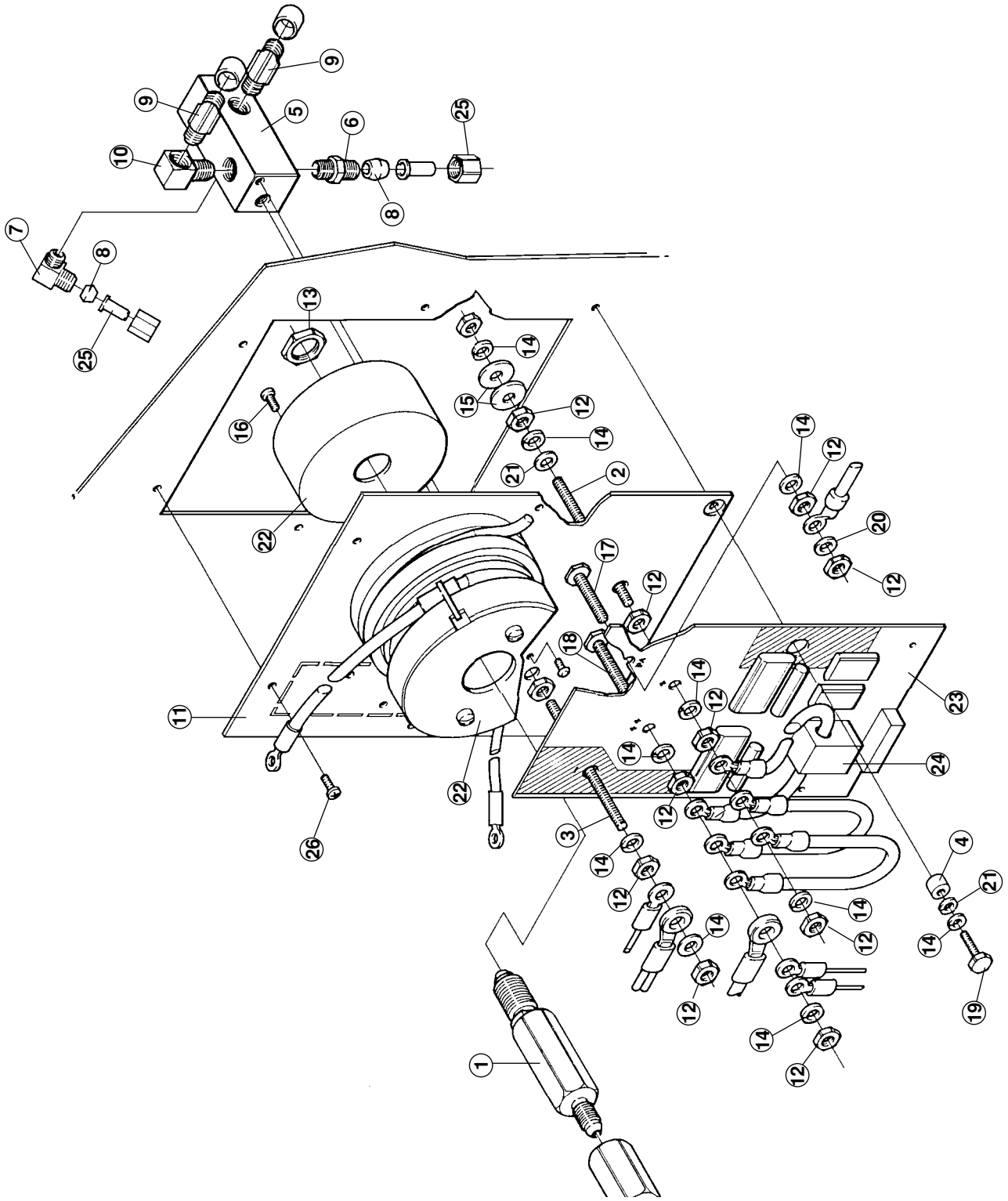

Figure 9-9 HT2000 Power Supply – High Frequency & I/O PCB Assembly

HT2000 Power Supply ① : High Frequency and I/O PCB

Item	Part Number	Description	Designator	Qty.
	029514	**HF & I/O PCB SA Pwr Sup/RHF**		1
1	004136	Connector, cathode		1
2	004311	Standoff, MAX200 Anode		1
3	004312	Standoff, MAX200 Cathode		1
4	004313	Spacer, .42ID X .750 X .50 lg		1
5	004314	Block, MAX200 Cathode		1
6	015131	Fitting, 3/8 Tube X 1/4 NPT		1
7	015132	Fitting, 90, 3/8 Tube X 1/4 NPT		1
8	015133	Ferrule, 3/8 OD Tube Delrin		2
9	015015	Adapter, 90 1/4 NPT X #6		2
10	015532	Street Elbow 1/4		1
11	041152	Panel, MAX200 Output		1
12	075153	Hexnut, 3/8-16, Finish, Brs		10
13	075156	Hexnut, 1/2-20, Finish/Jam, Brs		1
14	075194	Lkwshr, 3/8, Splitlock, Brz		9
15	075217	Flwshr, 3/8, .390,.875,.063, Brs		2
16	075335	M/S, 8-32 X 1/2, SL, Bin, Nyl		3
17	075347	Bolt, 5/16 X 11/4, Hex, Brz		1
18	075229	Bolt, 3/8-16 X 1 1/2, FTH, Hex, Brs		1
19	075351	Bolt, 3/8-16 X 1, Hex, Brs		1
20	075360	Flwshr, 5/16, .328,.520,.032, Brs		1
21	075361	Flwshr, 3/8, .394, .625, .032, Brs		2
22	**009356**	**Coil, A.C.T., 8G THHN**	**T1**	**1**
23	**041145**	**PC BD Assy MAX200 I/O**	**PCB8**	**1**
24	**029202**	**Current Sensor SA**	**CS1**	**1**
25	015134	Insert, 3/8 OD X .062 Brass		2
26	075072	M/S, 8-32 X 1/2		6

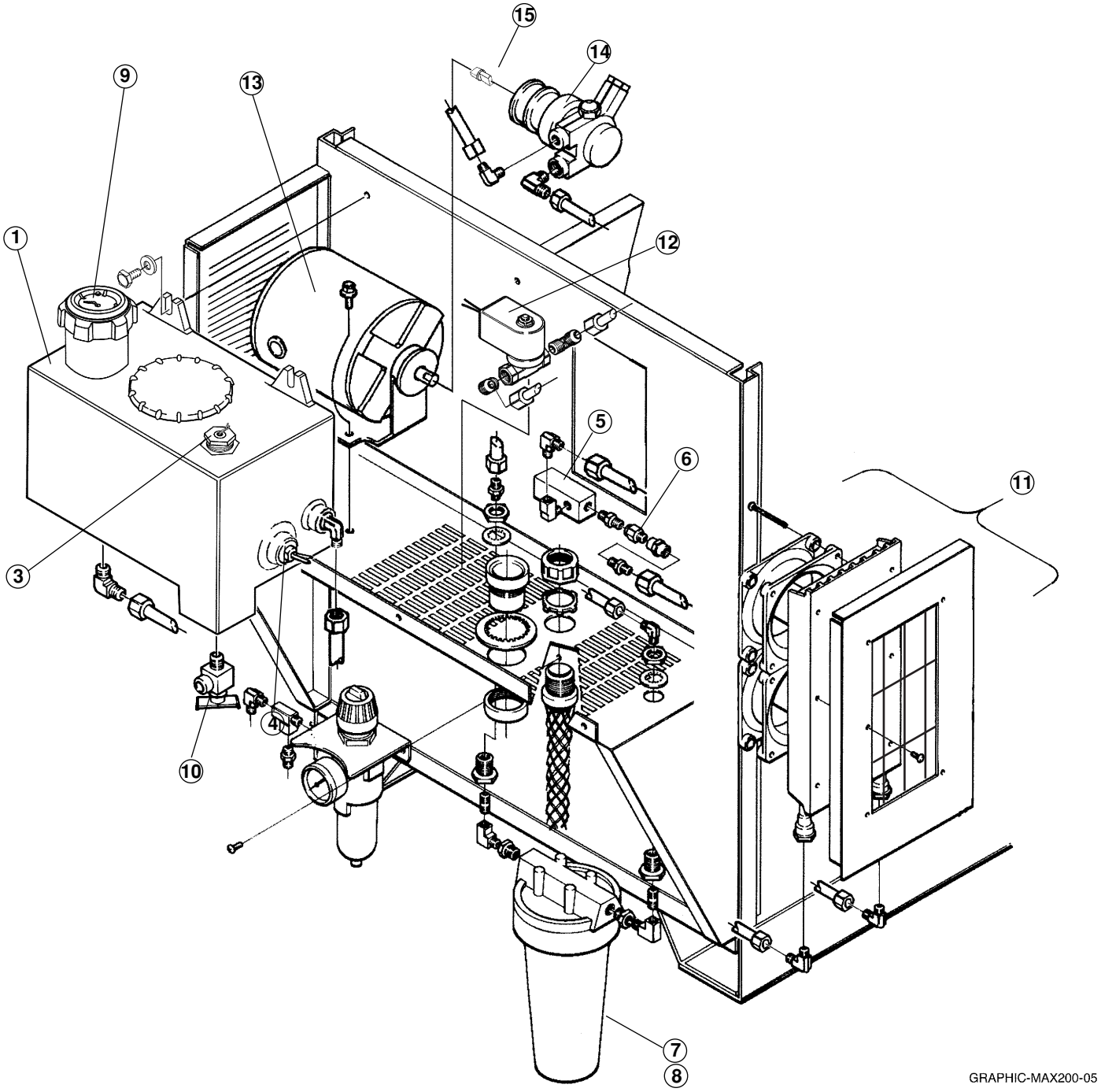

Figure 9-10 HT2000 Power Supply – Rear Wall Outside

HT2000 Power Supply ① : Rear Wall Outside

Item	Part Number	Description	Designator	Qty.
	029313	**Reservoir Subassembly, HT2000**		
1	002304	Coolant Res.		1
3	**129618**	**Switch, Level SA, 1/2 NPT**	**LS1**	**1**
4	**029323**	**Switch, Temp SA, 162 Deg F**	**TS2**	**1**
5	**029361**	**Flowswitch, 0.5GPM**	**FS1**	**1**
6	006053	Valve, Check 1/3 PSI, 1/4 NPTM		1
7	027005	Filter Element		1
8	027139	Filter Housing, 10" X 3/8 NPT		1
9	022036	Gauge: Liquid Level		1
10	006099	Bib Drain Valve:1/4NPT		1
11	**029324**	**Heat Exchanger SA, MAX200**		**1**
	027978	Heat Exchanger, Water/Air	**M5,M6**	1
12	**129383**	**Valve SA:HT2000 Power Supply**		**1**
	006046	Valve, Sol 240V 3/8 NPT NC	**V1**	1
	129252	**Water Pump SA**		1
13	**128385**	**Kit: Motor, 1/3 HP Carbon 230/50-60**	**M1**	1
14	**128384**	**Kit: Pump, 70 GPH Positive Displace**		1
15	031122	Coupler:Pro Pump-Motor		1

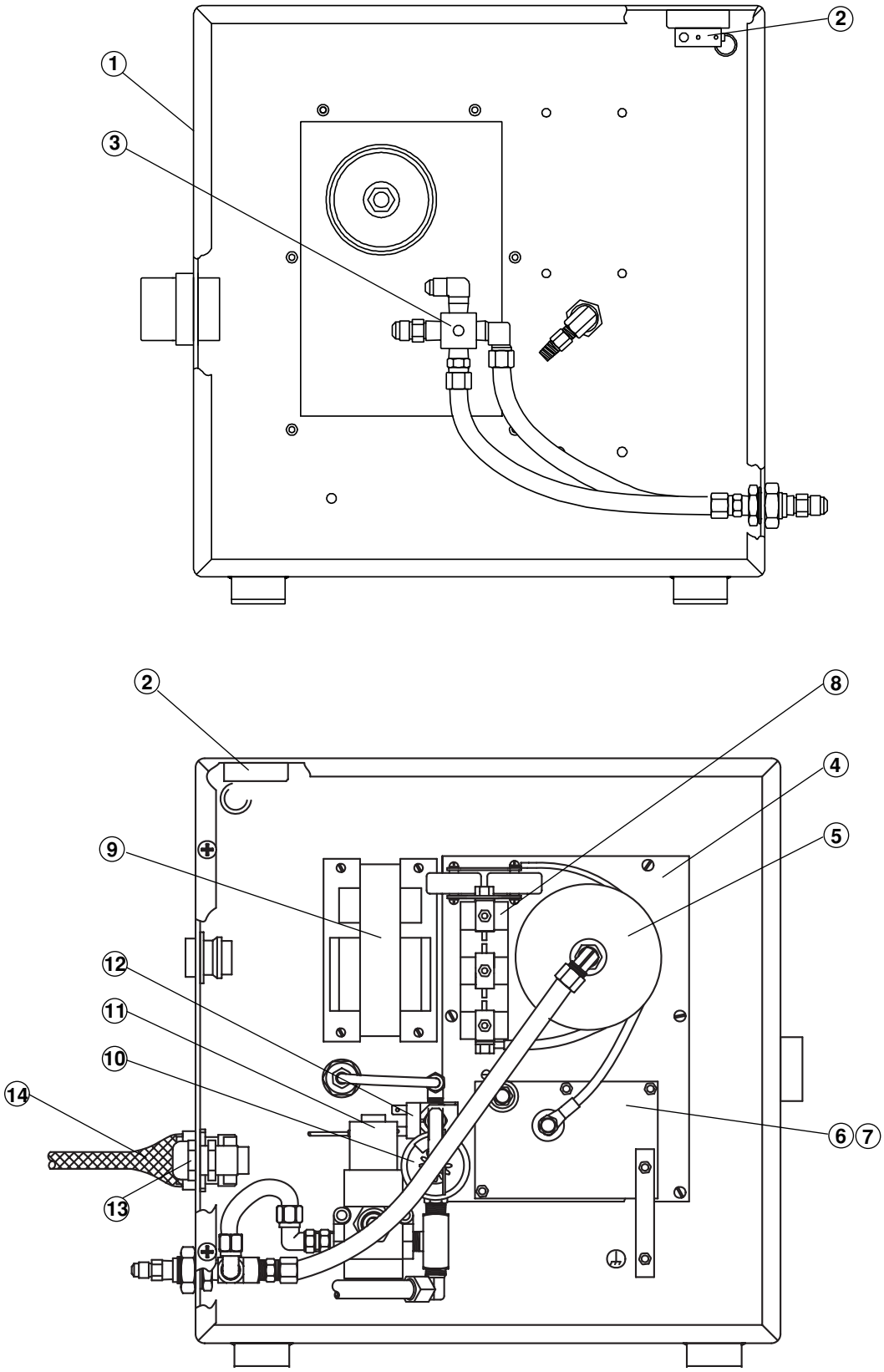

Figure 9-11 Remote High Frequency Console

Remote High Frequency Console ② #073067

Item	Part Number	Description	Designator	Qty.
1	001390	Encl: HT2000 RHF Cons		1
2	005100	Switch, Door Interlock	**S1, S2**	2
	029699	**HT2000 HF/IO PCB SA**		**1**
3	004314	Blk: 200 Cath		1
4	041152	Panel, MAX200 Output		1
5	**009793**	**Coil Assy, Hi Freq**	**T2/HF Coil**	**1**
6	**041312**	**PCB Assy: 2000 I/O**		**1**
7	009224*	Cap: .22UF 10% 1000	**C1, C2**	2
8	**109072**†**	**Spark Gap Assy**	**SG1**	**1**
9	**129150††**	**HV Transformer SA 6kV**	**T1**	**1**
10	005227	Switch, Pressure 12 PSI	**PS3**	1
11	006032	Valve, Sol 120V	**SV6**	1
12	006106	Valve Sol 120V 1/8FPT	**SV7**	1
13	008212	Strain Relief, 1/2 NPT		1
14	008483	Strain Relief, 1" NPS Basket		1

* Capacitors not shown in Fig. 9-11

** See Fig. 9-12 for detail of Spark Gap Assy

† Part number for spark gap assembly before RHF console # 2000-005000 is 009350

†† Part number for HV Transformer SA before RHF console # 2000-005000 is 029317

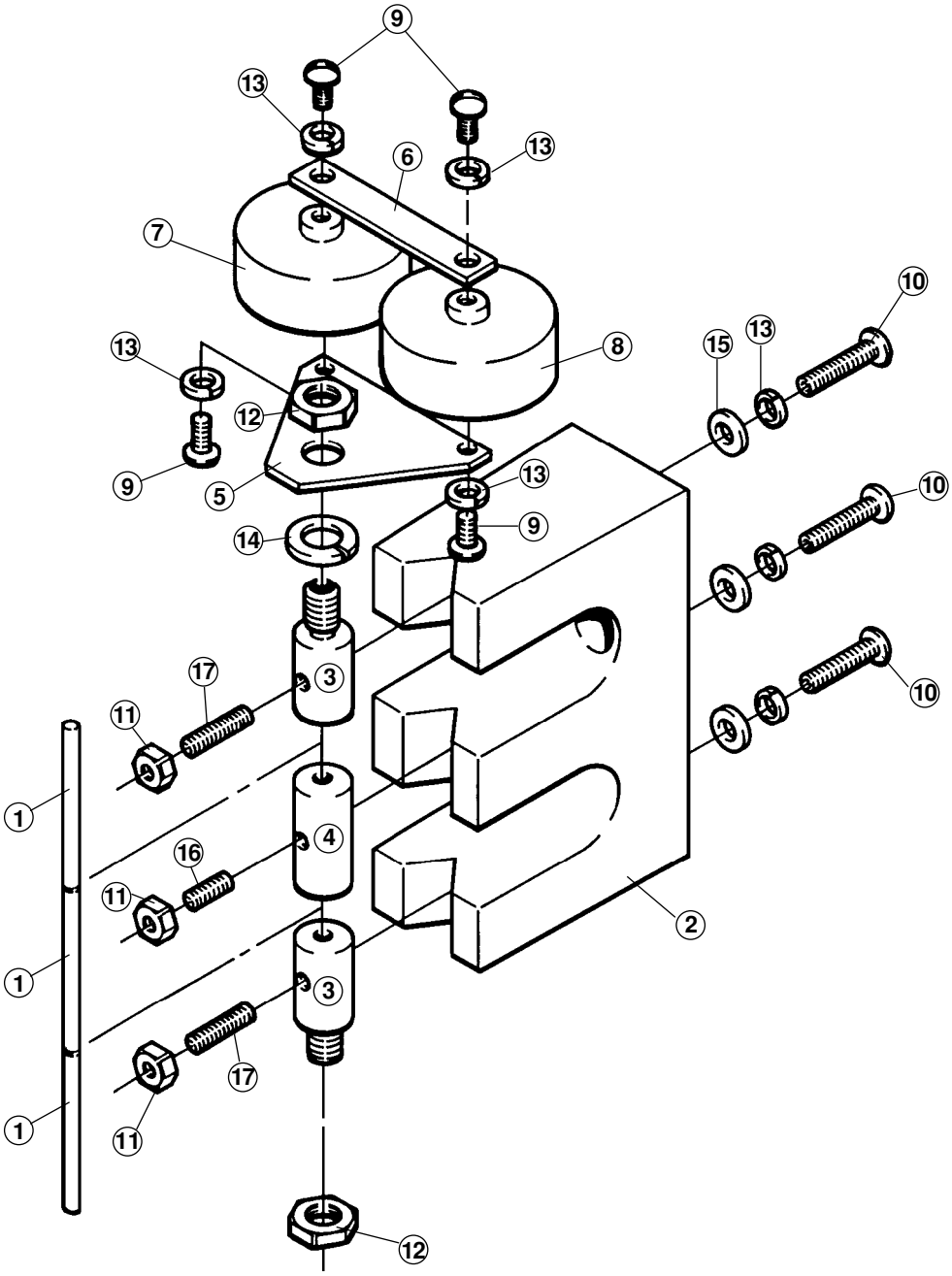

Figure 9-12 Remote High Frequency Console – Spark Gap Assembly

Remote High Frequency Console ② :Spark Gap Assembly #109072†

Item	Part Number	Description	Designator	Qty.
	109072†	**Spark Gap Assembly**	**SG1**	**1**
1	004061	Electrode, Spark Gap 1/8 X 1.6		3
2	004140	Block, Spark Gap		1
3	004141	Tungsten Mount End		2
4	004142	Tungsten Mount Center		1
5	004143	Plate, Capacitor Mtg		1
6	004144	Bar, Capacitor Mtg		1
7	009975††	Cap: 1400pF 20KV	**C3**	1
8	009975††	Cap: 1400pF 20KV	**C4**	1
9	075034	M/S, 8-32 X 1/4, SL, Rnd, Brs		4
10	075036	M/S, 8-32 X 3/4, SL, Rnd, Brs		3
11	075147	Hexnut, 8-32, Brs		3
12	075152	Hexnut, 5/16-18, Finish Brs		1
13	075191	Lkwshr, #8, Splitlock, Brz		7
14	075193	Lkwshr, 5/16, Splitlock, Brz		1
15	075213	Flwshr, #8, .202,.436, .037, Brs		3
16	075100	SktSet:8-32 X 3/8 HexCp SST		1
17	075101	SktSet:8-32 X 5/8 HexCp SST		2

† Part number for spark gap assembly before RHF console # 2000-005000 is 009350

†† Part number for capacitors before RHF console # 2000-005000 is 009280

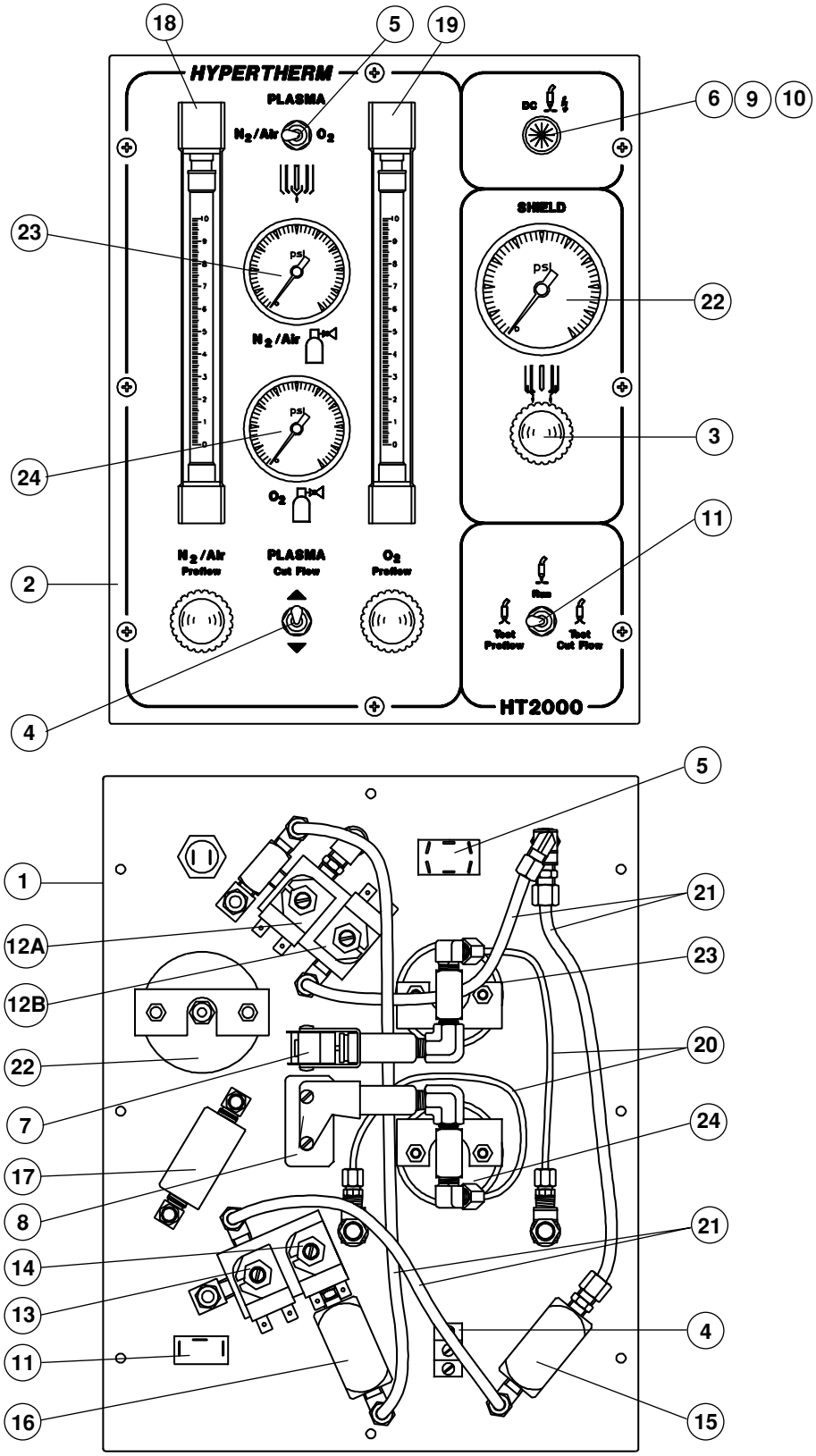

Figure 9-13 Gas Console

Gas Console ③ #073218

Item	Part Number	Description	Designator	Qty.
073218	**HT2000 Gas Console II**			
1	001335	Encl: 2000 Gas Csl		1
2	001622	Pnl: HT2000 Gas Csl II		1
3	004117	Cap: Ndl Valve		3
4	005042	Tgl Sw: Sp Mom ON/OFF/ON	**S3**	1
5	005181	Tgl Sw: DPDT Maint ON/NONE/ON	**S1**	1
6	005089	Lens:White for 005088		1
7	005243	Switch, Pressure 80 PSI	**PS1**	1
8	005243	Switch, Pressure 80 PSI	**PS2**	1
9	005149	Bulb, 120VAC T2	**LT1**	1
10	005151	Lamp Holder		1
11	005180	Tgl Sw: SP3T, Maint ON/OFF/ON	**S2**	1
12A	006109	Sol. Valve:150# Manf 120V 2-Way NC	**SV1A**	1
12B	006109	Sol. Valve:150# Manf 120V 2-Way NC	**SV1B**	1
13	006109	Sol. Valve:150# Manf 120V 2-Way NC	**SV2**	1
14	006109	Sol. Valve:150# Manf 120V 2-Way NC	**SV3**	1
15	006064	Valve, Ndl 1/8 FPT .125 Orf	**MV2**	1
16	006064	Valve, Ndl 1/8 FPT .125 Orf	**MV3**	1
17	006064	Valve, Ndl 1/8 FPT .125 Orf	**MV4**	1
18	011053	Flowmeter: 7.8 GPM/44 CFH	**FM1**	1
	011058	Fltube w/Float /BP-8 Flt:0-10 SC Cal 2%		
	011008	Shield: Plastic, for 011053 or 011056		
	011081	Flowmeter Float Stop		
19	011053	Flowmeter: 7.8 GPM/44CFH	**FM2**	1
	011058	Fltube w/Float /BP-8 Flt:0-10 SC Cal 2%		
	011008	Shield: Plastic, for 011053 or 011056		
	011081	Flowmeter Float Stop		
20	046048	Tubing, 1/8 OD Blk Air Brake		–
21	046077	Tubing, 1/4 OD X .040 Blu Nyl		–
22	022008	Gauge, Press 100#/Bar 2.5" Dia.	**PG3**	1
23	022020	Gauge, Press 160#/Bar 2" Dia.	**PG1**	1
24	022020	Gauge, Press 160#/Bar 2" Dia.	**PG2**	1
	015299*	Filter:.10 Micron 1/8FPT Brass Inline	**FL1, FL2**	2
	004718**	Manifold, valve		2

* Located behind O_2 and N_2 inlet connections

** Located behind solenoid valves

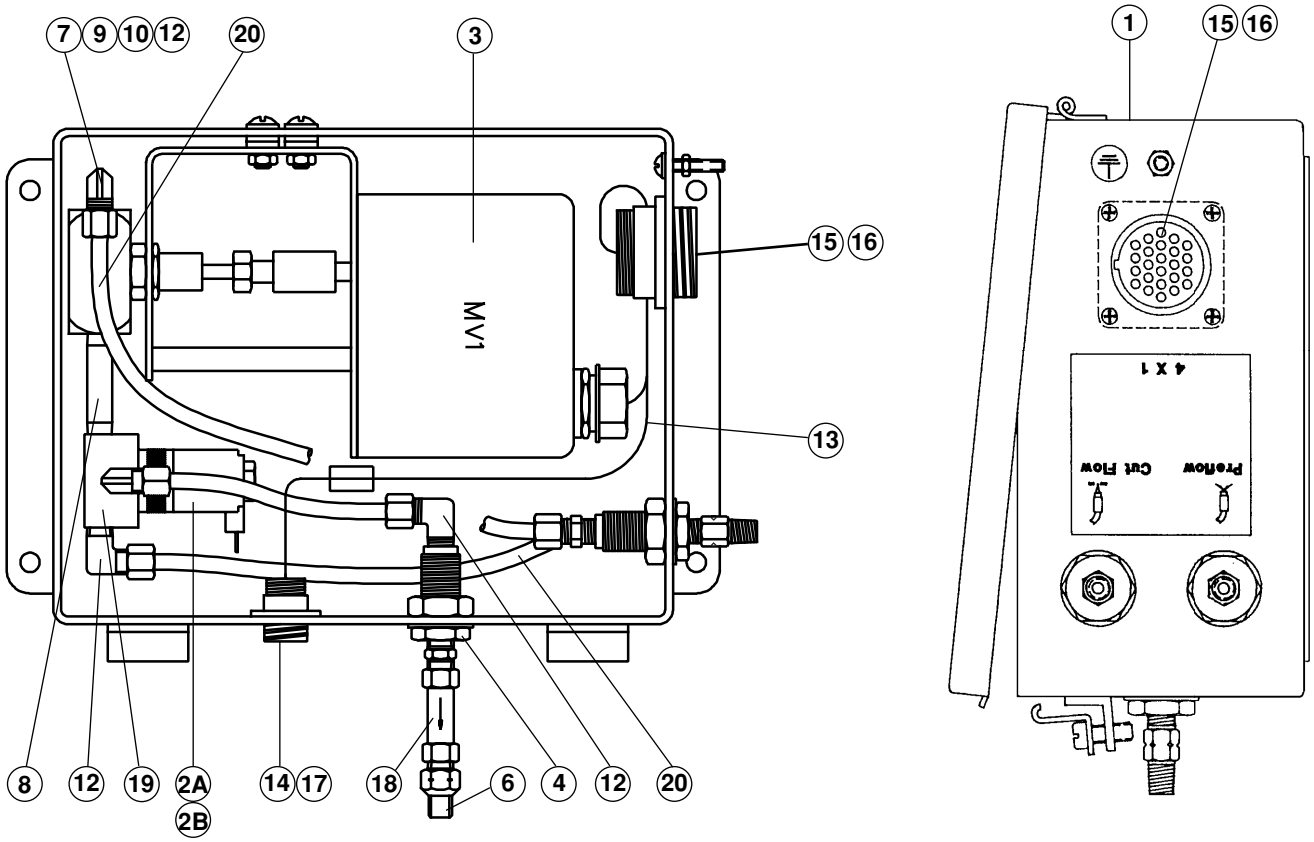

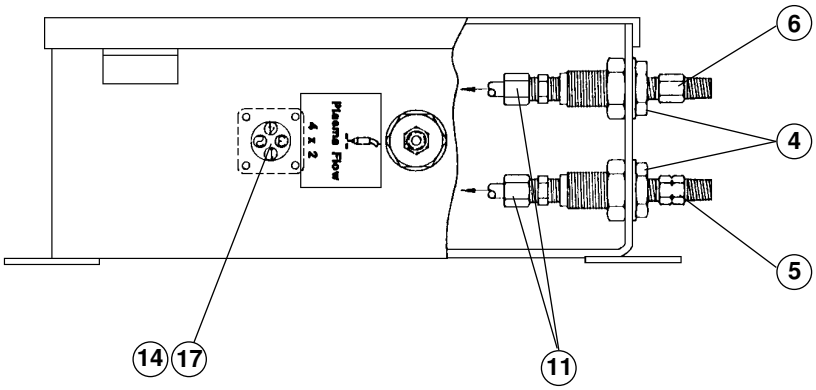

Figure 9-14 Motor Valve Console

Motor Valve Console ④ #073219

Item	Part Number	Description	Designator	Qty.
	073219	**Motor Valve Console II, HT2000**		
1	002218	Encl: HT2000 Mot Valve Csl		1
2A	006109	Sol. Valve:150# Manf 120V 2-Way NC	**SV4A**	1
2B	006109*	Sol. Valve:150# Manf 120V 2-Way NC	**SV4B**	1
3	006063	Mtr Valve: Elec 1/8 FPT .125 Orf	**MV2**	1
4	015050	Adapter, Bulkhead, 1/8 x 1-1/2		3
5	015116	Adapter, 1/8 NPT x Oxy 'A'		1
6	015210	Adapter, 1/8 NPT x Acet 'A'-LH		2
7	015530	Street Elbow 1/8		1
8	015588	Nipple, 1/8 x 2"		1
9	015608	Sleeve, Delrin 1/4" OD		6
10	015609	Insert Brass (1/4 OD)		6
11	015611	Connector Male 1/4 Tube x 1/8		2
12	015612	Elbow, Male 1/4 Tube x 1/8 NPT		4
13	**129166**	**Harn: HT2000 Mtr Valve Csl**		1
14	008210	Receptacle, 11-4 Rev Sex	**4X2**	1
15	008447	Receptacle, 23-37, Std Sex	**4X1**	1
16	008176	Pin, 20-24 AWG Type III+		10
17	008186	Socket, 20-24 AWG Type III+		4
18	015299	Filter:.10Micron 1/8FPT Brass In Line	**FL3**	1
19	004718	Maniflold:Motor Valve		1
20	046077	Tubing:1/4"OD .04W Blue Nylon		

* SV4B located behind SV4A

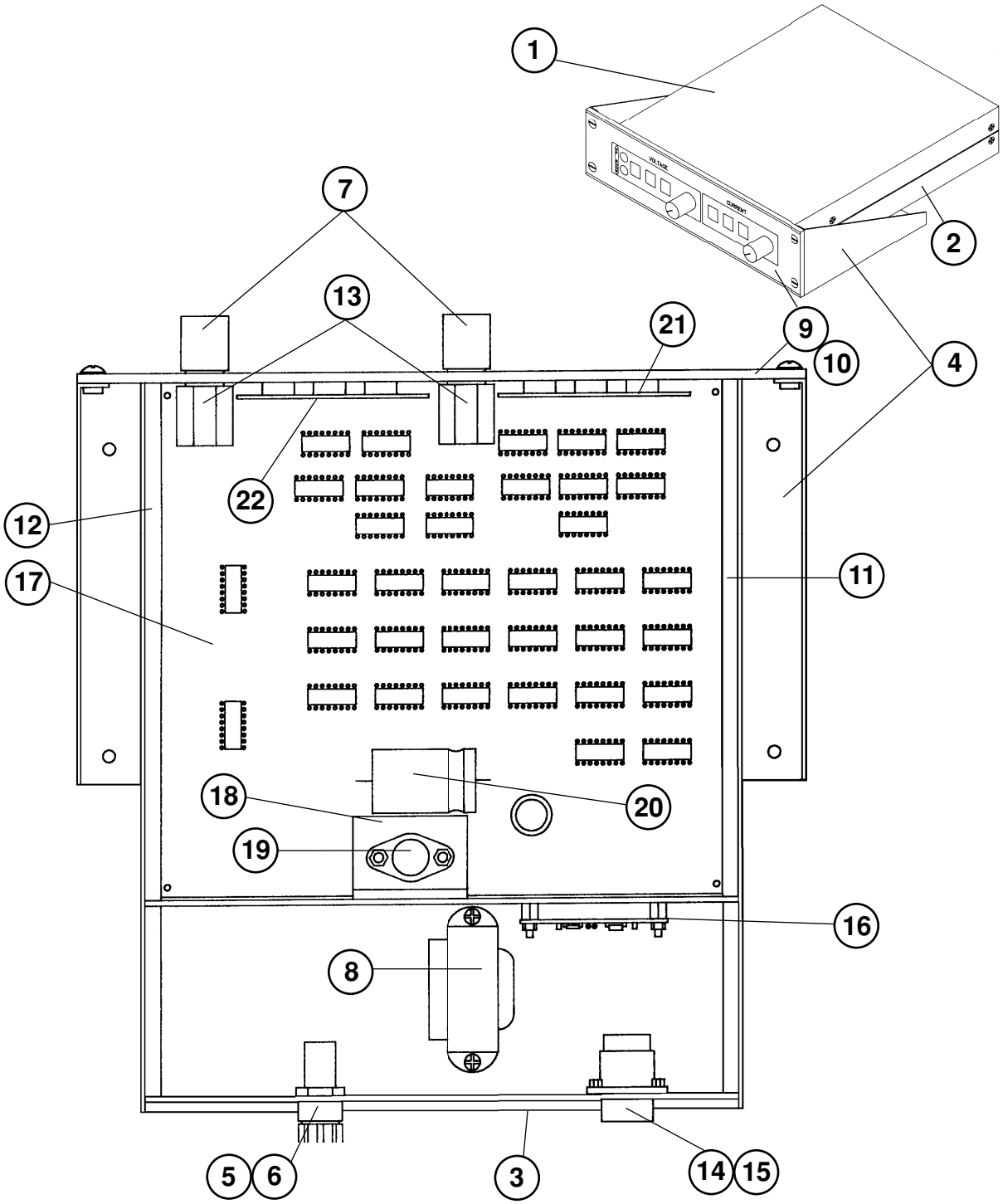

Figure 9-15 Remote V/C – Digital (DR) Control Station

Remote V/C ⑤ : Digital (DR) Control Station #073007

Item	Part Number	Description	Designator	Qty.
	073007	**Control Station, Digital Remote V/C MAX200**		**1**
1	002107	Cov: DR/PR V/C Top		1
2	002106	Cov: DR/PR V/C Bottom		1
3	002119	Panel, Rear, DR V/C		1
4	004119	Bracket, Mtg, DR/PR V/C		1
5	008069	Fuse, 3/8 Amp 313, 375		1
6	008165	Fuseholder, REM V/C		1
7	008164	Knob		2
8	014012	Transf'mer, DR/PR/SR V/C		1
	002118	**Encl, Assy DR V/C**		**1**
9	001133	Pl: HT400 DR V/C MDL FR		1
10	001131	Flg: HT400 DR/PR V/C MDL Fr		1
11	001137	FR: HT400 DR/PR/ST V/C Mdl LS		1
12	001138	FR: HT400 DR/PR/ST V/C Mdl RS		1
	029302	**Filter PNL-PCB SA DR/SR V/C**		**1**
13	009871	Potentiometer, 500 Ohm 10 turn		2
14	008175	Receptacle, Shell Size 13-9		1
15	008176	Pin, 20-24 AWG Type III+		6
	074016	Term 22-18 .250 FEM QC Insul		2
	074038	Term 22-18 FEM QC Insul		11
	074041	Term 22-18 #6 Ring Uninsul		1
	074067	Term 22-18 .25 MAL QC Insul		2
16	**041070**	**PC BD Assy Opto-Iso**		**1**
	008097	Terminal, PC HHS 2022C		4
17	**041187**	**PC BD Assy Dig/Sta V/C MAX200**		**1**
18	004116	Heatsink, DR/PR SR V/C		1
19	042059	IC, LM340AK-5.0		1
20	009274	Capacitor, 2600 UF 15VDC		1
	008097	Terminal, PC HHS 2022C		11
	008098	Terminal, PC CAM		9
21	**041076**	**PC BD Assy Rem Volt Disp**		**1**
22	**041077**	**PC BD Assy Rem Curr Disp**		**1**

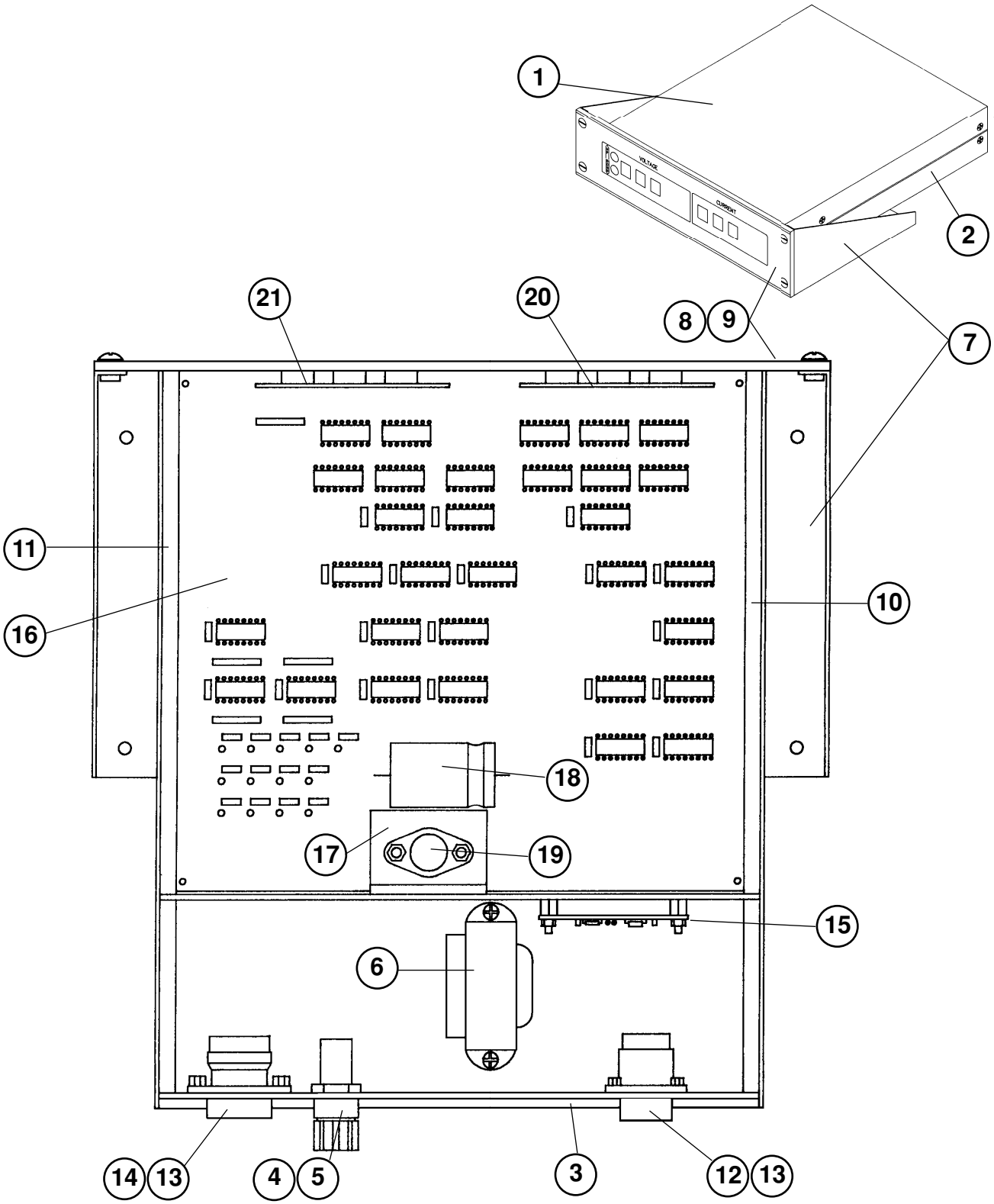

Figure 9-16 Remote V/C – Programmable (PR) Control Station

Remote V/C ⑤ : Programmable (PR) Control Station #055004

Item	Part Number	Description	Designator	Qty.
	055004	**Control, Programmable V/C**		**1**
1	002107	Cov: DR/PR V/C Top		1
2	002106	Cov: DR/PR V/C Bottom		1
3	002123	Panel, Rear, PR V/C		1
4	008069	Fuse, 3/8 Amp 313, 375		1
5	008165	Fuseholder, REM V/C		1
6	014012	Transf'mer, DR/PR/SR V/C		1
7	004119	Bracket, Mtg, DR/PR V/C		1
	002122	**Encl Assy, PR V/C**		**1**
8	001139	PL: HT400 PR V/C MDL FR		1
9	001131	Flg: HT400 DR/PR V/C MDL Fr		1
10	001137	FR: HT400 DR/PR/ST V/C Mdl LS		1
11	001138	FR: HT400 DR/PR/ST V/C Mdl RS		1
	029089	**Filter PNL-PCB SA PR V/C**		**1**
12	008175	Receptacle, Shell 13-9 Size		1
13	008176	Pin, 20-24 AWG Type III+		22
14	008193	Recp, CPC 17-16 Standard Sex		1
	074016	Term 22-18 .250 FEM QC Insul		2
	074038	Term 22-18 FEM QC Insul		5
	074041	Term 22-18 #6 Ring Uninsul		4
	074067	Term 22-18 .25 MAL QC Insul		2
15	**041070**	**PC BD Assy Opto-Iso**		**1**
	008097	Terminal, PC HHS 2022C		4
16	**041085**	**PC BD Assy, PR V/C**		**1**
17	004116	Heatsink, DR/PR SR V/C		1
18	009274	Capacitor, 2600 UF 15VDC		1
19	042059	IC, LM340AK-5.0		1
	008097	Terminal, PC HHS 2022C		18
	008098	Terminal, PC CAM		7
20	**041076**	**PC BD Assy, Rem Volt Disp**		**1**
21	**041077**	**PC BD Assy, Rem Curr Disp**		**1**

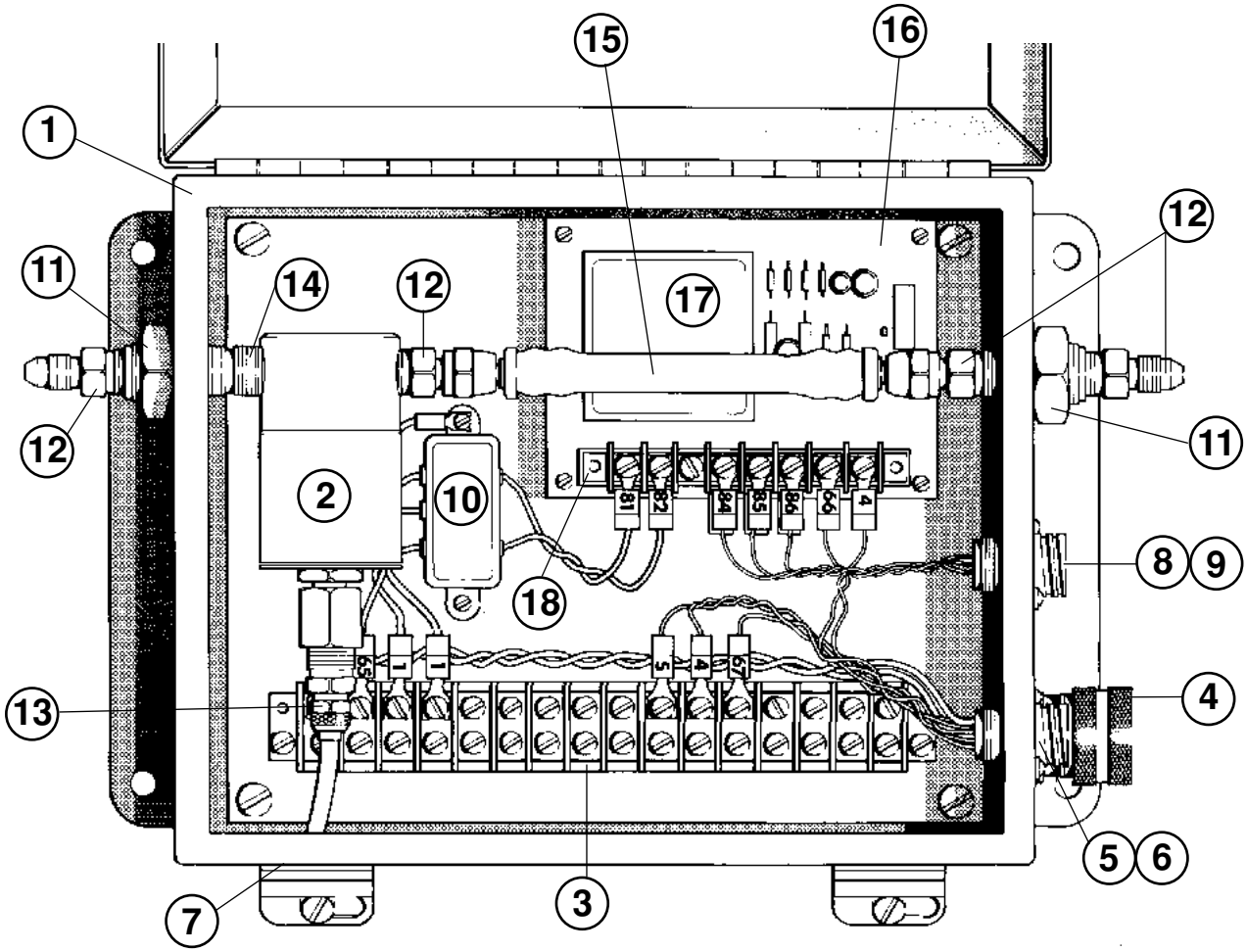

Figure 9-17 IHS Console

IHS Console ⑥ #053016

Item	Part Number	Description	Designator	Qty.
	053016	**Control Module, IND IHS, HT400**		
1	002095	Encl., Control Module UW-IHS		1
2	006021	Valve, SOL 75# 1/4 NPTF		1
3	008073	Terminal Strip (16)		1
4	008071	Strain Relief, 1/2 X .375-.500		1
5	008175	Receptacle, Shell Size 13-9		1
6	008176	Pin, 20-24 AWG Type III+		7
7	008177	Grommet, HHS 91107		1
8	008186	Socket, 20-24 AWG Type III+		8
9	008210	Receptacle, 11-4		2
10	009041	Filter, AC, 1 Amp 1B3		1
11	015001	Adapter, Bulkhead, 1/4 NPTF		2
12	015005	Adapter, 1/4 NPT x #4		4
13	015100	Adapter, 1/4 NPT x 1/4 Poly		1
14	015502	Nipple, 1/4 x CL		1
15	**024038**	**Hose Assy, #4 x 7"**		**1**
16	**041043**	**PC BD Assy UW-IHS**		**1**
17	041023	Power Source, IHS		1
18	008094	Terminal Strip (8)		1

Argon-Hydrogen Manifold ⑦ #073109

Item	Part Number	Description	Designator	Qty.
	073109	**Argon-Hydrogen Manifold**		1
1	002050	Bracket: Ar/H2 Manifold		1
2	011005	Flowmeter: 0-10 SC/BT-8 w/valve	**FM1**	1
3	015014	Adapter: 1/4NPT X #4 Male 90° Brass		1
4	015047	Adapter: 1/4NPT X AC 'A' Male Brass		1
5	015512	Nipple: 1/4 X 3" long Brass		1
6	015551	Coupling: 1/4 Brass		1
7	**024143**	**Hose Assy, #4 X 9"**		1
	029831	**Manifold SA: 073109 H35 Manifold**		1
8	005046	Pressure Switch: 0-200 1/4FPT	**PS1**	1
9	006009	Solenoid Valve:200# 1/4FPT 120V NC	**SV5**	1
10	015001	Adapter: 1/4FPT X 15/16 Brass		1
11	015014	Adapter: 1/4NPT X #4 Male 90° Brass		1
12	015047	Adapter: 1/4NPT X AC 'A' Male Brass		1
13	015596	Tee: 1/4 Brass		1
	023702	**Cable: HT2000 H35 Manifold Press. Sw.**		1
14	008195	CACLP:CPC Size 11		1
15	008205	Pin: 18-16 AWG Type III + CRP		4
16	008807	Receptacle Shell:CPC 11-4	**14X1**	1
17	047055	Cable, 18-2 TW PR, Unshielded		6 ft

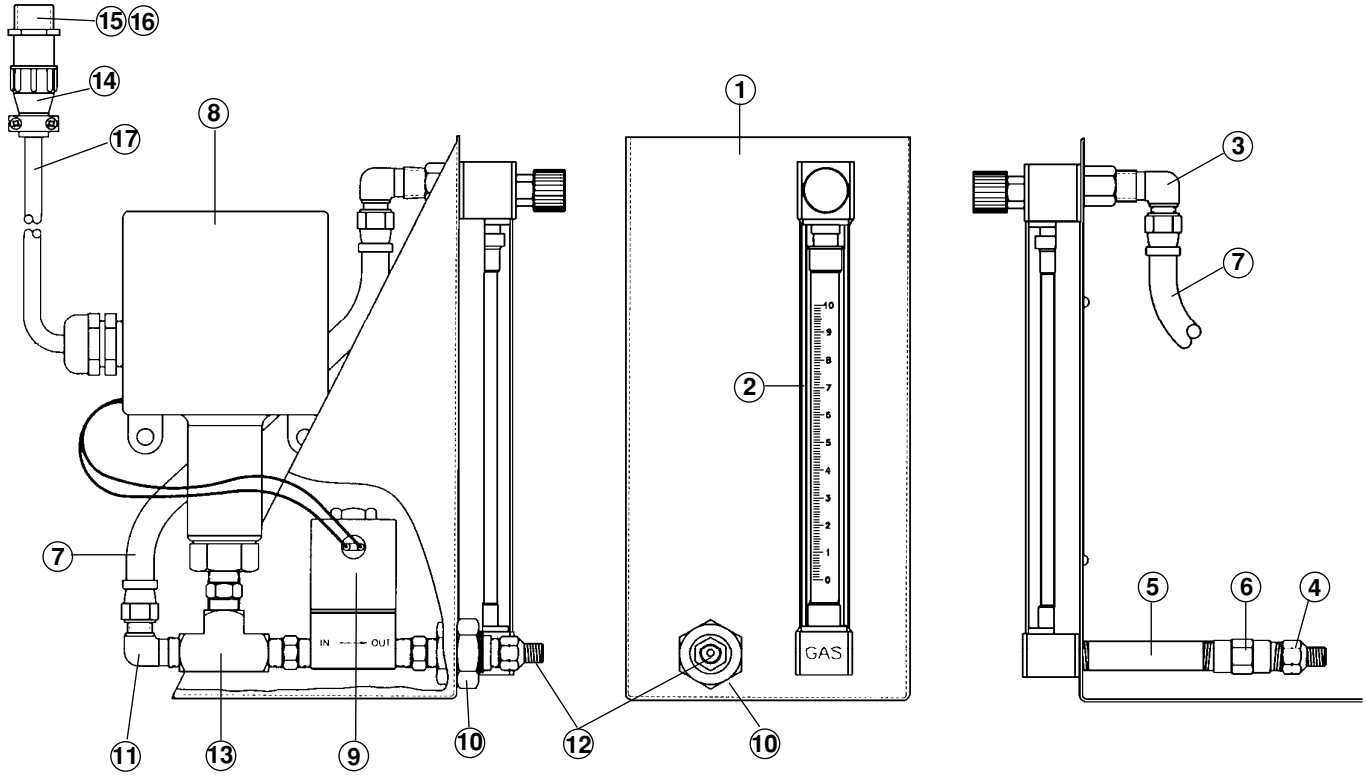

Figure 9-18 Argon-Hydrogen Manifold

Timer / Counter ⑧ #073194

Item	Part Number	Description	Designator	Qty.
	073194	**HT2000 Cntr-Tmr**		
1	001068	Encl:DCC/PCC/RCC RVR		1
2	001391	Pnl:DCC RCVR Rear		1
3	001392	Pnl:DCC RCVR Front		1
4	005161	PB Sw:Blk SPST NO Sub-Mini		2
5	008176	Pin:24-20 AWG Type III + CRP		4
6	008193	RCPT Shell:CPC 17-16 Std Sex	**11X1**	1
7	027274	Counter, Self Powered LCD		2
8	027275	Meter, Elapsed Time LCD		1
–	003140	Relay:120VAC DP AU Cont (See HT2000 wiring diagram)		2

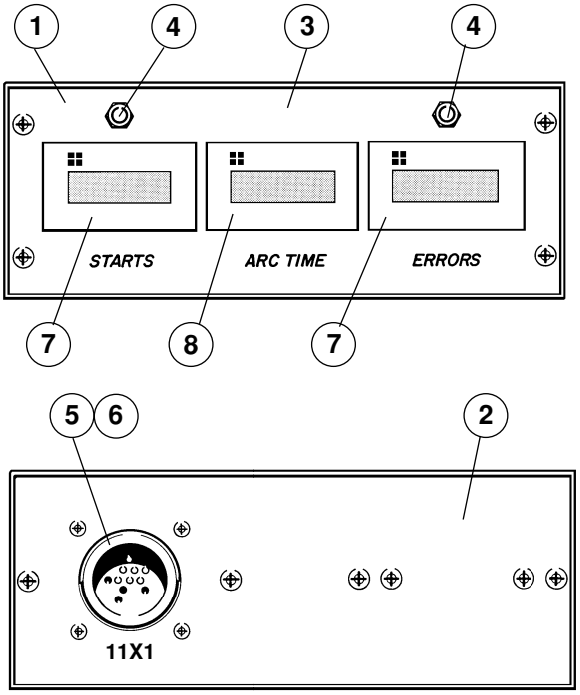

Figure 9-19 Timer/Counter

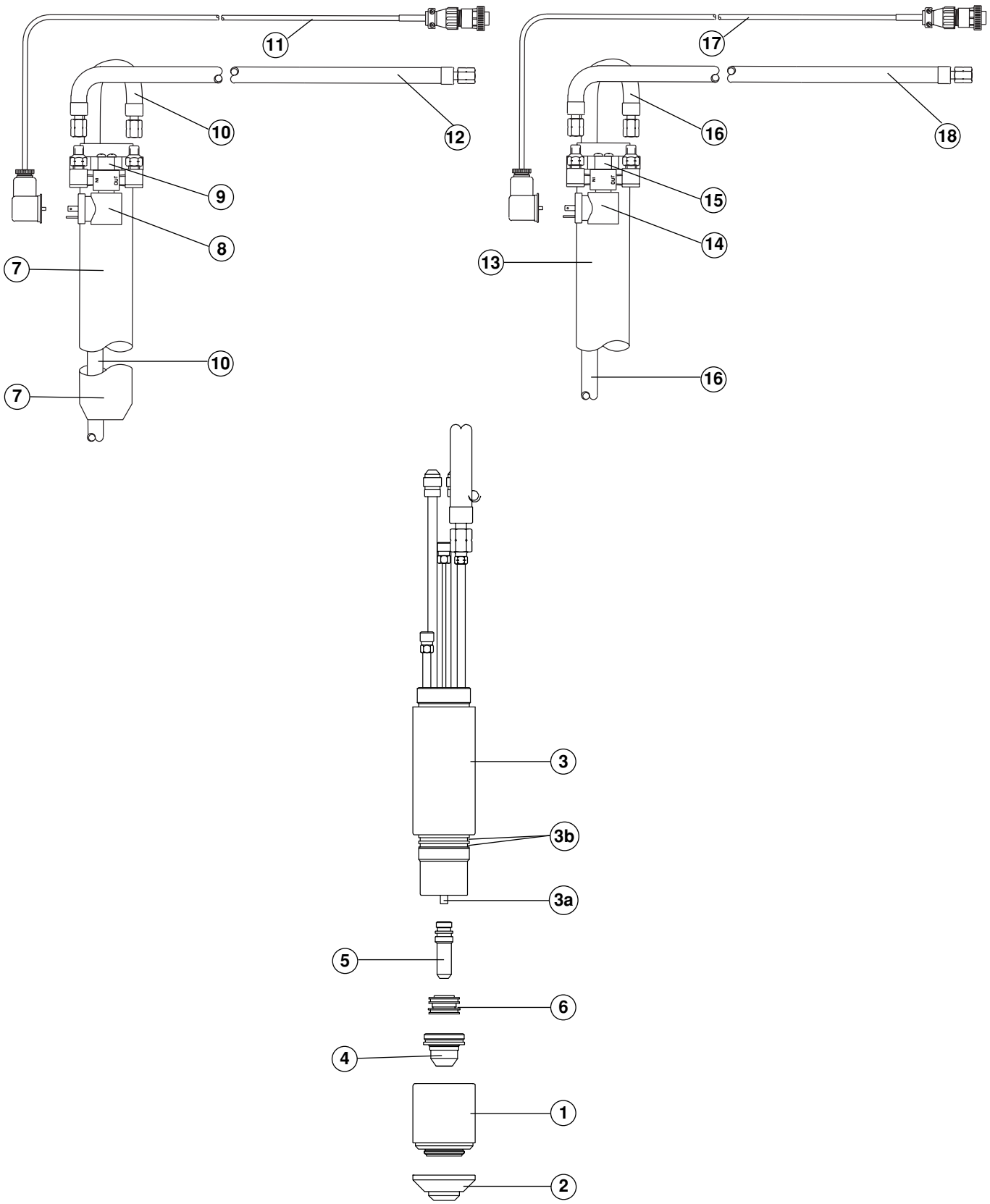

Figure 9-20 HT2000 Torch – 2" (50 mm) Diameter Mounting Sleeves

HySpeed HT2000 Machine Torch ⑨ with 2" (50 mm) Dia. Sleeve – 128381

Item	Part Number	Description	Designator	Qty.
	128381	**HT2000 Machine Torch Assy w/Valve**		
1	220242*	Nozzle Retaining Cap with IHS: Hyspeed, 200A		1
2	220239*	Shield: Hyspeed, 200A		1
3	**120584**	**Machine Torch Main Body**		**1**
3a	020963	Water Tube:PAC200T/2000 Electd Cool		1
3b	044027	O-Ring:Buna 70Duro 1.301X.070		2
4	220237*	Nozzle: Hyspeed, 200A		1
5	220235*	Electrode: Hyspeed, 200A		1
6	220236*	Swirl Ring: Hyspeed, 200A		1
7	120894	Tch Mtg Sleeve:2"		1
	129470	**Off-Valve SA: HT2000 2" Mch Tch**		**1**
8	006100	Solenoid Valve:150# 1/8 FPT		1
9	120832	Bracket:HT2000 S.S. 2" Dia Torch Off-Valve II		1
10	024355	Hose Assy:3/16Blu LH'A' 1'		1 ft
11	**123185**	**Cable, Torch Off-Valve**	**4X2**	1
12	**024354**	**Hose SA, 3/16 Blu LH 'A'**		1

* Hyspeed consumables are for cutting mild steel with Oxygen at 200A only.

HySpeed HT2000 Stainless Steel Machine Torch ⑨ with 2" (50 mm) Dia. Sleeve – 128367

Item	Part Number	Description	Designator	Qty.
	128367	**HT2000 S.S. Machine Torch Assy w/Valve**		
1	020423	Nozzle Retaining Cap		1
2	020424	Shield, MAX200/HT2000 200A		1
3	**120356**	**HT2000 S.S. Machine Torch Main Body**		**1**
3a	020963	Water Tube:PAC200T/2000 Electd Cool		1
3b	044027	O-Ring:Buna 70Duro 1.301X.070		2
4	020605	Nozzle, MAX200 200A .082 O2		1
5	120667	Electrode: HT2000 200A O2, LL		1
6	120833	Swirl Ring: HT2000 O2		1
13	020041	Tch Mtg Sleeve:2" GNRC		1
	129470	**Off-Valve SA: HT2000 2" Mch Tch**		**1**
14	006100	Solenoid Valve:150# 1/8 FPT		1
15	120832	Bracket:HT2000 S.S. 2" Dia Torch Off-Valve II		1
16	024355	Hose Assy:3/16Blu LH'A' 1'		1 ft
17	**123185**	**Cable, Torch Off-Valve**	**4X2**	1
18	**024354**	**Hose SA, 3/16 Blu LH 'A'**		1

Torch Mounting Bracket for 2" (50 mm) Dia. Sleeve – 020046

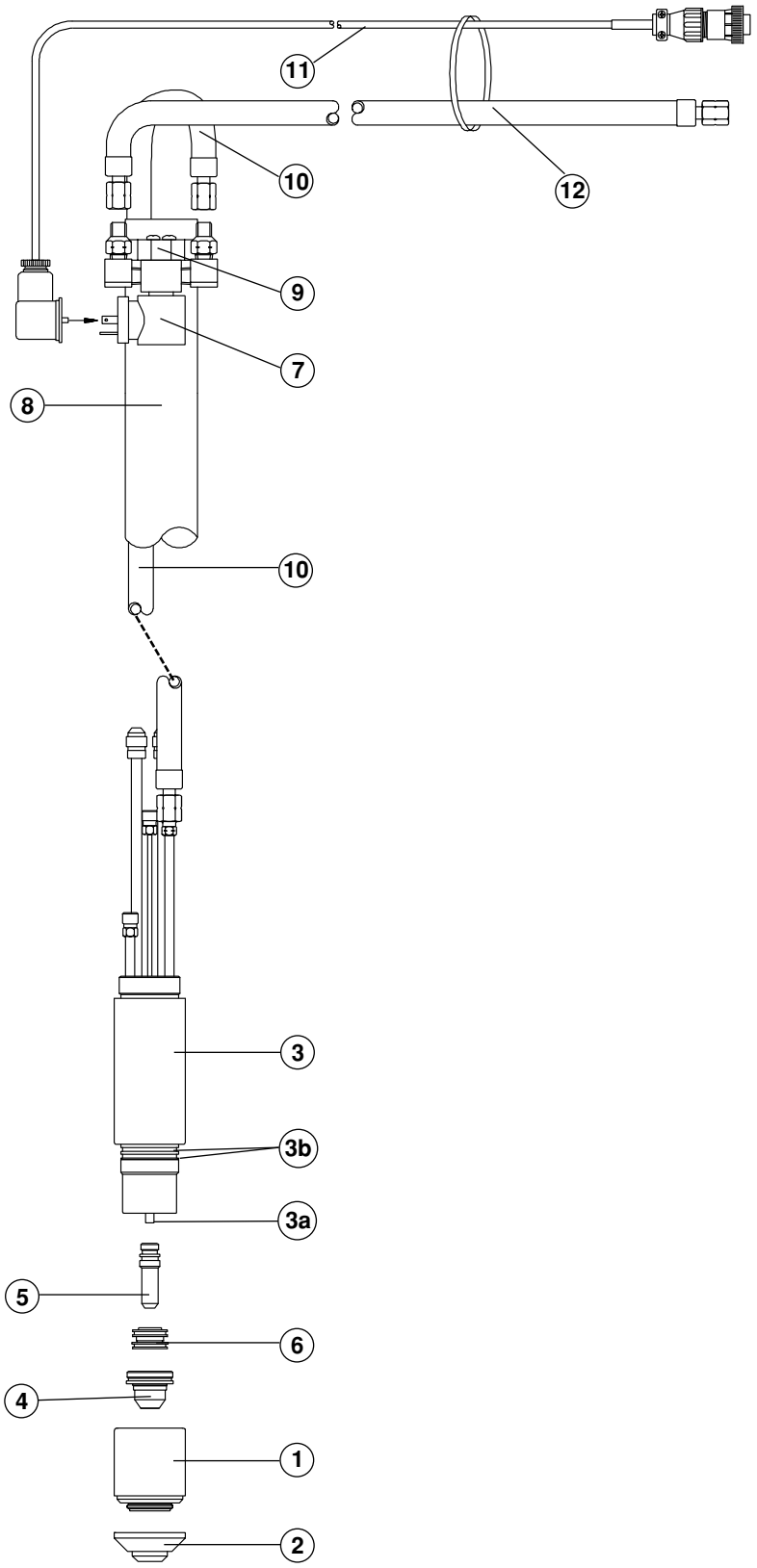

Figure 9-20A HySpeed HT2000 Torch – 1-3/4" (45 mm) Diameter Mounting Sleeve

HySpeed HT2000 Machine Torch ⑨ with 1-3/4" (44 mm) Dia. Sleeve – 128141

Item	Part Number	Description	Designator	Qty.
	128141	**HT2000 Opt. Machine Torch Assy w/Valve**		
1	120837	Nozzle Retaining Cap with IHS tab		1
2	020424	Shield, MAX200/HT2000 200A		1
3	**120584**	**HT2000 Machine Torch Main Body**		**1**
3a	020963	Water Tube:PAC200T/2000 Electd Cool		1
3b	044027	O-Ring:Buna 70Duro 1.301X.070		2
4	020605	Nozzle, MAX200 200A .082 O2		1
5	120667	Electrode: HT2000 200A O2, LL		1
6	120833	Swirl Ring: HT2000 O2		1
	129168	**Off-Valve SA: HT2000 Mch Tch**		**1**
7	006100	Solenoid Valve:150# 1/8 FPT		1
8	020431	Tch Mtg Sleeve:1-3/4" GNRC		1
9	120492	Bracket:1-3/4" Dia Torch Off-Valve II		1
10	024355	Hose Assy:3/16Blu LH'A' 1'		1 ft
11	**123185**	**Cable, Torch Off-Valve**	**4X2**	1
12	**024354**	**Hose SA, 3/16 Blu LH 'A'**		1

Torch Mounting Bracket for 1-3/4" (44 mm) Dia. Sleeve – 020522

(10)

Torch End **RHF Console End**

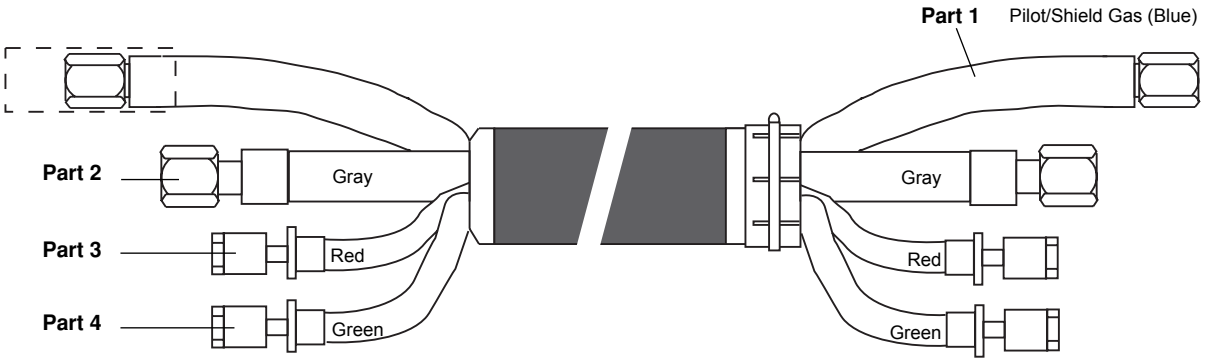

Shielded Torch Leads Part No.	Part 1	Part 2	Part 3	Part 4	Length
028657	023429	024221	023032 023032		**10 ft (3 m)**
028658	023430	024222	023034	023034	**15 ft (4.6 m)**
028659	023431	024223	023012	023012	**20 ft (6.1 m)**
028546	023326	024192	023013	023013	**25 ft (7.6 m)**
028660	023432	024224	023014	023014	**30 ft (9.2 m)**
028661	023433	024225	023015	023015	**35 ft (10.7 m)**
028662	023434	024226	023016	023016	**40 ft (12.2 m)**
028663	023435	024227	023387	023387	**45 ft (13.7 m)**
028547	023327	024193	023199 023199		**50 ft (15.3 m)**
028767	023773	024404	023772	023772	**55 ft (16.8 m)**
028768	023515	024259	023052	023052	**60 ft (18.3 m)**

Figure 9-21 HT2000 Torch Leads

(11)

See page 9-36 for graphic. See page 9-37 for part numbers

Figure 9-22 Cable & Hose from Motor Valve Console to Off-Valve on Torch

(12)

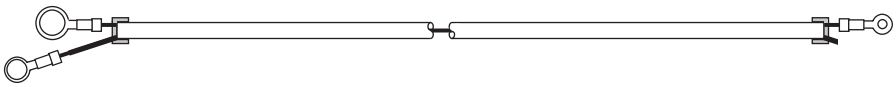

Part No.	Length	Part No.	Length	Part No.	Length
023754	4 ft (1.2 m)	023633	75 ft (22.9 m)	023740	125 ft (38.1 m)
023919	8 ft (2.4 m)	123076	85 ft (25.9 m)	023635	150 ft (45.8 m)
023987	10 ft (3 m)	023634	100 ft (30.5 m)	023652	200 ft (61 m)
023631	25 ft (7.6 m)	023966	110 ft (33.6 m)		
023632	50 ft (15.3 m)	023961	115 ft (35.1 m)		
123043	60 ft (18.3 m)	123146	120 ft (36.6 m)		

Figure 9-23 Pilot Arc Cable – PS to RHF Console

(13) (14)

Part No.	Length	Part No.	Length	Part No.	Length
023755	4 ft (1.2 m)	023986	35 ft (10.7 m)	023964	110 ft (33.6 m)
023920	8 ft (2.4 m)	023405	50 ft (15.3 m)	023959	115 ft (35.1 m)
023508	10 ft (3 m)	123041	60 ft (18.3 m)	123144	120 ft (36.6 m)
023403	15 ft (4.6 m)	023406	75 ft (22.9 m)	023738	125 ft (38.1 m)
023404	25 ft (7.6 m)	123074	85 ft (25.9 m)	023408	150 ft (45.8 m)
023968	30 ft (9.2 m)	023407	100 ft (30.5 m)	023644	200 ft (61 m)

Figure 9-24 Negative Lead and Work Cable - PS to RHF Console / PS to Work Table

(15)

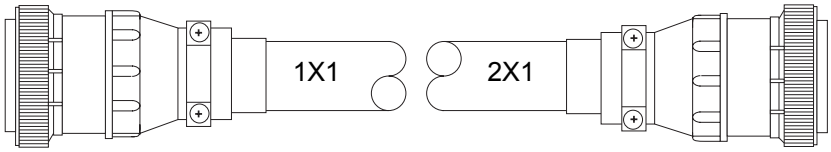

Part No.	Length	Part No.	Length
023756	3 ft (0.9 m)	023613	100 ft (30.5 m)
023921	7 ft (2.1 m)	023965	110 ft (33.6 m)
023988	10 ft (3 m)	023960	115 ft (35.1 m)
023550	15 ft (4.6 m)	123145	120 ft (36.6 m)
023610	25 ft (7.6 m)	023739	125 ft (38.1 m)
023611	50 ft (15.3 m)	023614	150 ft (45.8 m)
123042	60 ft (18.3 m)	023645	200 ft (61 m)
023612	75 ft (22.9 m)		
123075	85 ft (25.9 m)		

Figure 9-25 HT2000 RHF Cable – PS to RHF Console

16

Part No.	Length	Part No.	Length	Part No.	Length
023989	10 ft (3 m)	023607	75 ft (22.9 m)	023609	150 ft (45.8 m)
023549	15 ft (4.6 m)	123077	85 ft (25.9 m)	023953	200 ft (61 m)
023605	25 ft (7.6 m)	023608	100 ft (30.5 m)		
023757	38 ft (11.6 m)	023963	115 ft (35.1 m)		
023606	50 ft (15.3 m)	123147	120 ft (36.6 m)		
123044	60 ft (18.3 m)	023743	125 ft (38.1 m)		

Figure 9-26 Gas Console Cable – PS to Gas Console

17

Part No.	Length	Part No.	Length
023551	15 ft (4.6 m)	023593	100 ft (30.5 m)
023590	25 ft (7.6 m)	123078	110 ft (33.6 m)
023776	35 ft (10.7 m)	023967	120 ft (36.6 m)
023591	50 ft (15.3 m)	123143	130 ft (39.7 m)
023592	75 ft (22.9 m)	023594	150 ft (45.8 m)
123045	85 ft (25.9 m)	023658	200 ft (61 m)

Figure 9-27 Motor Valve Console Cable – PS to Motor Valve Console

18

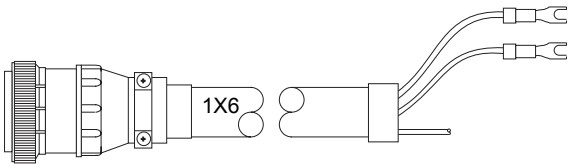

Part No.	Length	Part No.	Length
023841	6 ft (1.8 m)	123080	85 ft (25.9 m)
023842	15 ft (4.6 m)	023847	100 ft (30.5 m)
023843	25 ft (7.6 m)	023962	115 ft (35.1 m)
023844	35 ft (10.7 m)	123148	120 ft (36.6 m)
023845	50 ft (15.3 m)	023848	125 ft (38.1 m)
123047	60 ft (18.3 m)	023849	150 ft (45.8 m)
023846	75 ft (22.9 m)	023850	200 ft (61 m)

Figure 9-28 Machine Interface Cable – PS to Machine I/O

19

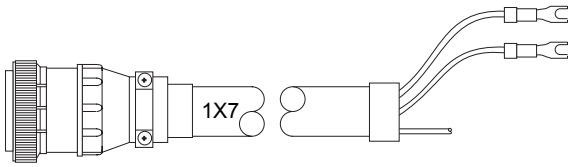

Part No.	Length	Part No.	Length
023902	6 ft (1.8 m)	023855	75 ft (22.9 m)
023851	15 ft (4.6 m)	023856	100 ft (30.5 m)
023852	25 ft (7.6 m)	023903	125 ft (38.1 m)
023853	35 ft (10.7 m)	023857	150 ft (45.8 m)
023854	50 ft (15.3 m)	023858	200 ft (61 m)

Figure 9-29 Machine Interface V/C Cable – PS to Machine Computer

20

Part No.	Length	Part No.	Length
023990	7 ft (2.1 m)	123188	120 ft (36.6 m)
023911	15 ft (4.6 m)	023882	125 ft (38.1 m)
023878	25 ft (7.6 m)	023883	150 ft (45.8 m)
023879	50 ft (15.3 m)	023884	200 ft (61 m)
123040	60 ft (18.3 m)	023885	250 ft (76.3 m)
023880	75 ft (22.9 m)	023886	275 ft (83.9 m)
123073	85 ft (25.9 m)	023887	300 ft (91.5 m)
023881	100 ft (30.5 m)		

Figure 9-30 Remote V/C Cable – PS to Digital (DR)/Programmable (PR) V/C

21

Part No.	Length	Part No.	Length
023834	15 ft (4.6 m)	023898	125 ft (38.1 m)
023835	25 ft (7.6 m)	023839	150 ft (45.8 m)
023836	50 ft (15.3 m)	023840	200 ft (61 m)
023837	75 ft (22.9 m)	023899	250 ft (76.3 m)
023838	100 ft (30.5 m)	023900	275 ft (83.9 m)
		023901	300 ft (91.5 m)

Figure 9-31 Power Supply/Programmable Remote (PR) Cable – PS to PR V/C

22

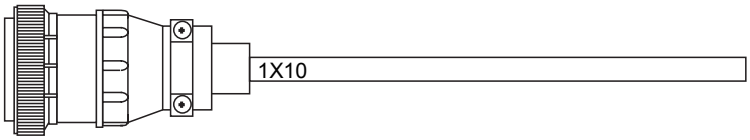

Part No.	Length
023866	50 ft (15.3 m)
023867	75 ft (22.9 m)
023868	100 ft (30.5 m)

See IM205 (#802050)
for Water Muffler Pump information.

Figure 9-32 Water Muffler Pump Cable – PS to WM

23

Part No.	Length	Part No.	Length
023859	25 ft (7.6 m)	023862	100 ft (30.5 m)
023860	50 ft (15.3 m)	023863	150 ft (45.8 m)
023861	75 ft (22.9 m)	023864	200 ft (61 m)

Figure 9-33 Initial Height Sensing Cable – PS to IHS

24

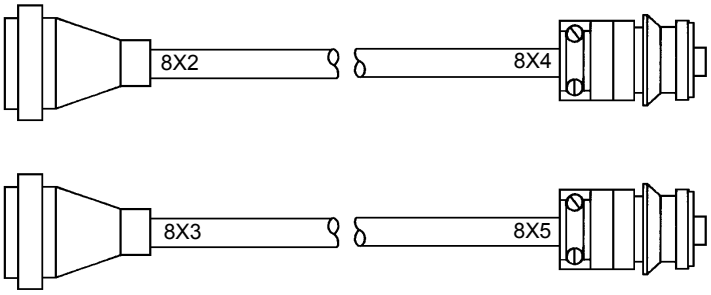

Part No.	Length
023888	2 ft (0.6 m)
023869	40 ft (12.2 m)

Part No.	Length
023889	2 ft (0.6 m)
023870	40 ft (12.2 m)

Figure 9-34 Cables from IHS to Sensors

25

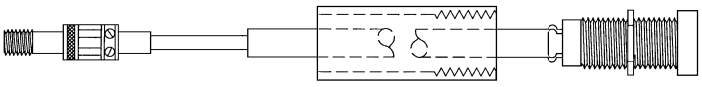

Part No.
005074

Figure 9-35 Inductive Sensor Assembly

26

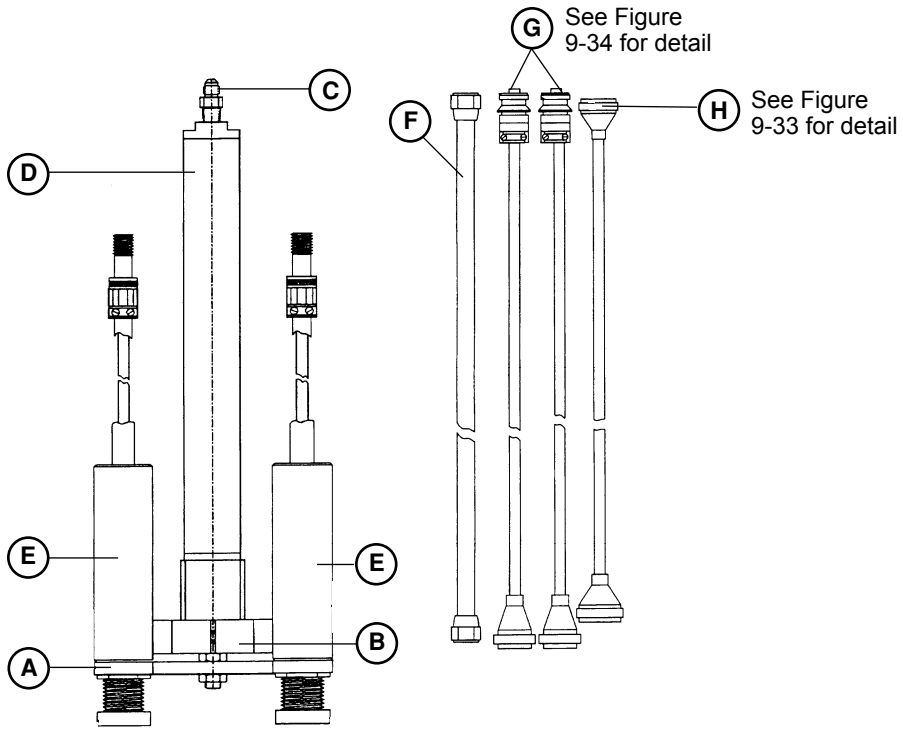

Figure 9-36 Ind. IHS Torch Mounting Assy with Leads for IHS Control Module

Item	Part Number	Description	Qty.
	028720	**Inductive IHS, 2"** - used with standard and stainless steel torch	
	029044	**Torch MTG SA, Induct IHS for 2" Dia. Torch**	
A	004082	Bracket, IND Sensor	1
B	004083	Bracket, MTG Torch, 2"	1
C	015005	Adapter, 1/4 NPT x #4	1
D	027024	Cylinder, IND Sensor, UW-IHS	1
E	**005074**	**Inductive Sensor Assembly**	**2**
	053016	**IHS Control Module** - pg. 9-32 and 9-33	**1**

Item	Part Number	Description	Qty.
	028390	**Inductive IHS, 1-3/4"** - used with optional torch	
	029334	**Torch MTG SA, Induct IHS for 1-3/4" Dia. Torch**	
A	004082	Bracket, IND Sensor	1
B	004349	Bracket, MTG Torch, 1-3/4"	1
C	015005	Adapter, 1/4 NPT x #4	1
D	027024	Cylinder, IND Sensor, UW-IHS	1
E	**005074**	**Inductive Sensor Assembly**	**2**
	053016	**IHS Control Module** - pg. 9-32 and 9-33	**1**

Interconnecting Leads for Inductive IHS System – Included with both systems above

Item	**028811** **25 ft** (7.6 m)	**028812** **50 ft** (15.3 m)	**028813** **75 ft** (22.9 m)	**028814** **100 ft** (30.5 m)	**028815** **150 ft** (45.8 m)	**028816** **200 ft** (61 m)
F	024144	024144	024144	024144	024144	024144
G	023869/023870	023869/023870	023869/023870	023869/023870	023869/023870	023869/023870
H	023859	023860	023861	023862	023863	023864

27

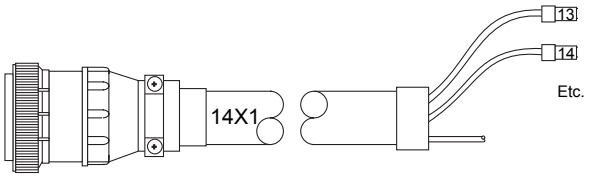

Part No.	Length	Part No.	Length
023660	15 ft (4.6 m)	023663	75 ft (22.9 m)
023661	25 ft (7.6 m)	023664	100 ft (30.5 m)
023662	50 ft (15.3 m)	023665	150 ft (45.8 m)

Figure 9-37 Power Supply to Argon / Hydrogen Console Cable

28

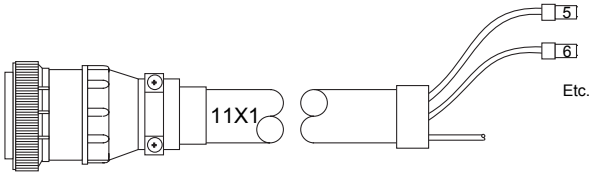

Part No.	Length	Part No.	Length
023687	10 ft (3 m)	123079	85 ft (25.9 m)
023692	25 ft (7.6 m)	023695	100 ft (30.5 m)
023758	38 ft (11.6 m)	023993	115 ft (35.1 m)
023693	50 ft (15.3 m)	123189	120 ft (36.6 m)
123046	60 ft (18.3 m)	023696	150 ft (45.8 m)
023694	75 ft (22.9 m)	023954	200 ft (61 m)

Figure 9-38 Timer / Counter Cable – PS to Timer / Counter

29

Part No.	Length	Part No.	Length
024204	15 ft (4.6 m)	024450	115 ft (35.1 m)
024205	25 ft (7.6 m)	024516	120 ft (36.6 m)
024155	50 ft (15.3 m)	024490	125 ft (38.1 m)
024398	75 ft (22.9 m)	024159	150 ft (45.8 m)
024487	85 ft (25.9 m)	024470	180 ft (54.9 m)
024206	100 ft (30.5 m)	024333	200 ft (61 m)
024481	110 ft (33.6 m)		

Figure 9-39 Oxygen Supply Hose – Oxygen Supply to Gas Console

30

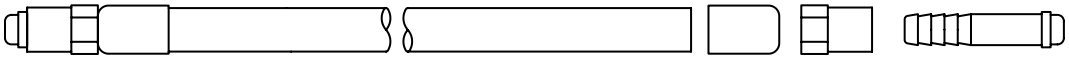

Part No.	Length	Part No.	Length
024505	6 ft (1.8 m)	024488	85 ft (25.9 m)
024210	10 ft (3 m)	024116	100 ft (30.5 m)
024203	15 ft (4.6 m)	024482	110 ft (33.6 m)
024232	20 ft (6.1 m)	024451	115 ft (35.1 m)
024134	25 ft (7.6 m)	024517	120 ft (36.6 m)
024211	35 ft (10.7 m)	024491	125 ft (38.1 m)
024112	50 ft (15.3 m)	024120	150 ft (45.8 m)
024148	75 ft (22.9 m)	024185	180 ft (54.9 m)
		024124	200 ft (61 m)

Figure 9-40 Nitrogen Supply Hose – Nitrogen Supply to Gas Console

31

Part No.	Length	Part No.	Length
024317	5 ft (1.5 m)	024031	40 ft (12.2 m)
024026	10 ft (3 m)	024207	45 ft (13.7 m)
024027	15 ft (4.6 m)	024340	50 ft (15.3 m)
024017	20 ft (6.1 m)	024419	56 ft (17.1 m)
024028	25 ft (7.6 m)	024127	60 ft (18.3 m)
024029	30 ft (9.2 m)	024343	75 ft (22.9 m)
024030	35 ft (10.7 m)	024344	100 ft (30.5 m)

Figure 9-41 Plasma Preflow Gas Hosing – Gas Console to Motor Valve Console

32

Part No.	Length	Part No.	Length
024316	5 ft (1.5 m)	024310	40 ft (12.2 m)
024307	10 ft (3 m)	024323	45 ft (13.7 m)
024320	15 ft (4.6 m)	024311	50 ft (15.3 m)
024308	20 ft (6.1 m)	024420	56 ft (17.1 m)
024321	25 ft (7.6 m)	024367	60 ft (18.3 m)
024309	30 ft (9.2 m)	024357	75 ft (22.9 m)
024322	35 ft (10.7 m)	024358	100 ft (30.5 m)

Figure 9-42 Plasma Cut Flow Gas Hosing – Gas Console to Motor Valve Console

33

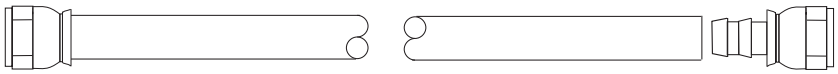

Part No.	Length	Part No.	Length
024043	4 ft (1.2 m)	024486	85 ft (25.9 m)
024341	10 ft (3 m)	024115	100 ft (30.5 m)
024200	15 ft (4.6 m)	024452	110 ft (33.6 m)
024342	20 ft (6.1 m)	024449	115 ft (35.1 m)
024133	25 ft (7.6 m)	024515	120 ft (36.6 m)
024448	35 ft (10.7 m)	024395	125 ft (38.1 m)
024407	45 ft (13.7 m)	024119	150 ft (45.8 m)
024012	50 ft (15.3 m)	024480	170 ft (51.9 m)
024472	60 ft (18.3 m)	024184	180 ft (54.9 m)
024147	75 ft (22.9 m)	024123	200 ft (61 m)

Figure 9-43 Shield Gas Hose – Shield Gas Supply to Gas Console

34

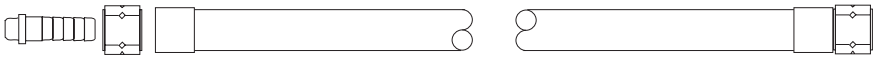

Part No.	Length	Part No.	Length
024348	5 ft (1.5 m)	024352	40 ft (12.2 m)
024313	10 ft (3 m)	024353	45 ft (13.7 m)
024302	15 ft (4.6 m)	024304	50 ft (15.3 m)
024349	20 ft (6.1 m)	024305	75 ft (22.9 m)
024303	25 ft (7.6 m)	024306	100 ft (30.5 m)
024350	30 ft (9.2 m)	024312	150 ft (45.8 m)
024351	35 ft (10.7 m)		

Figure 9-44 Shield Gas – Gas Console to RHF Console

35

Part No.	Length	Part No.	Length
024061	5 ft (1.5 m)	024092	40 ft (12.2 m)
024063	10 ft (3 m)	024403	45 ft (13.7 m)
024065	15 ft (4.6 m)	024096	50 ft (15.3 m)
024067	20 ft (6.1 m)	024174	60 ft (18.3 m)
024069	25 ft (7.6 m)	024468	75 ft (22.9 m)
024071	30 ft (9.2 m)	024523	100 ft (30.5 m)
024356	35 ft (10.7 m)		

Figure 9-45 Shield Gas Sense Hose – Gas Console to RHF Console

36

Part No.	Length	Part No.	Length
024354	10 ft (3 m)	024369	30 ft (9.2 m)
024355	12 ft (3.7 m)	024370	40 ft (12.2 m)
024368	20 ft (6.1 m)	024443	50 ft (15.3 m)
		024467	75 ft (22.9 m)

Figure 9-46 Argon/Hydrogen Gas Hosing – Argon/Hydrogen Console to Torch

37

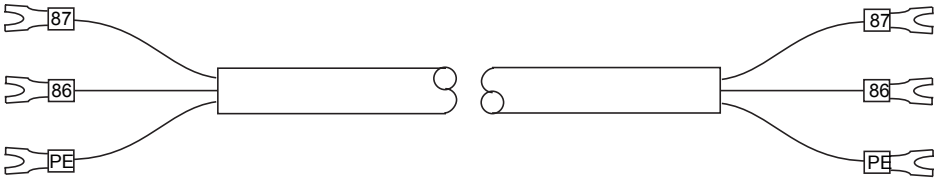

Part No.	Length	Part No.	Length
023340	15 ft (4.6 m)	023343	100 ft (30.5 m)
023341	25 ft (7.6 m)	023344	150 ft (45.8 m)
023342	50 ft (15.3 m)		

Figure 9-47 Hold Cable – Power Supply to Power Supply

38

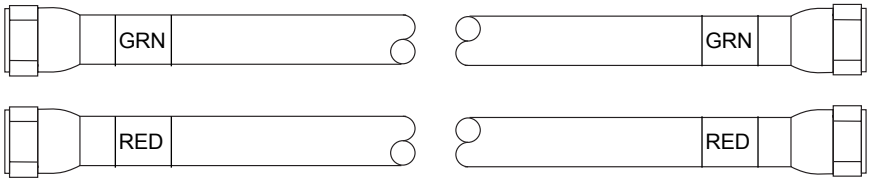

Part No.	Length	Part No.	Length
028760	3 ft (0.9 m)	128078	85 ft (25.9 m)
028860	7 ft (2.1 m)	028444	100 ft (30.5 m)
028652	10 ft (3 m)	028902	110 ft (33.6 m)
028440	15 ft (4.6 m)	028896	115 ft (35.1 m)
028653	20 ft (6.1 m)	128129	120 ft (36.6 m)
028441	25 ft (7.6 m)	028747	125 ft (38.1 m)
028442	50 ft (15.3 m)	028445	150 ft (45.8 m)
128052	60 ft (18.3 m)	128064	170 ft (51.9 m)
028443	75 ft (22.9 m)	028637	200 ft (61 m)

Figure 9-48 Cooling Hose Set – Power Supply to RHF Console

HySpeed HT2000 Consumable Starter Kit #128824

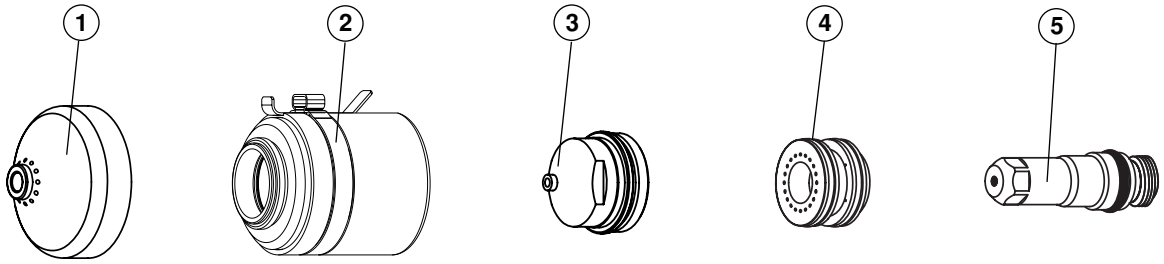

Figure 9-49 HySpeed HT2000 Starter Consumable Parts

Item	Part Number	Description	Qty.
	128824	**Kit: HySpeed HT2000 ConsumableStarter**	
	001285	Box: Gray Plastic	1
1	**220239**	**Shield, Hyspeed 200A**	**1**
2	**220242**	**Nozzle Retaining Cap with IHS tab, HySpeed 200A**	**1**
3	**220237**	**Nozzle, Hyspeed 200A**	**3**
5	**220236**	**Swirl RIng: Hyspeed 200A**	**1**
7	**220235**	**Electrode: HySpeed 200A**	**3**
	027055	Lubricant, Silicon, 1/4 Oz Tube	1
	804560	Quick Set-up Card: HT2000 HySpeed	1

HySpeed HT2000 Consumable Parts Kit #128825

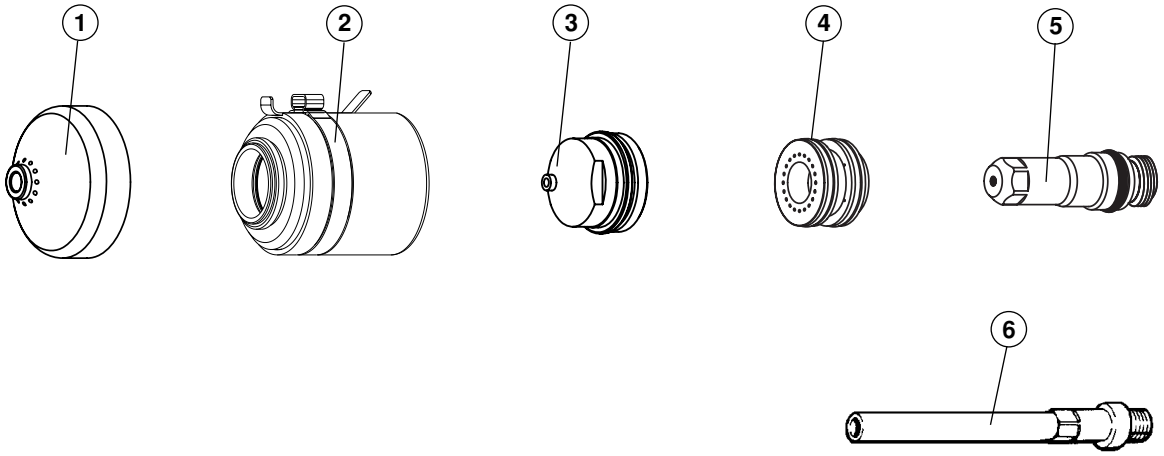

Figure 9-50 HySpeed HT2000 Consumable Parts

Item	Part Number	Description	Qty.
	128825	**Kit: HySpeed HT2000 Consumable Parts**	
	001067	Box: Gray Plastic	1
1	**220239**	**Shield, Hyspeed 200A**	**1**
1	**020424**	**Shield, 200A**	**1**
1	**020448**	**Shield, 100A**	**1**
2	**220242**	**Nozzle Retaining Cap with IHS tab, HySpeed 200A**	**1**
2	**120837**	**Nozzle Retaining Cap, with IHS tab**	**1**
3	**220237**	**Nozzle, Hyspeed 200A**	**3**
3	**020690**	**Nozzle, 100A .055 O2**	**2**
4	**020608**	**Nozzle, 200A .086 Air/N2/H35**	**3**
4	**020611**	**Nozzle, 100A .059 Air**	**3**
5	**220236**	**Swirl Rlng: Hyspeed 200A**	**1**
6	**020607**	**Swirl Ring, Air/N2/H35**	**1**
6	**020613**	**Swirl Ring, Air**	**1**
6	**020679**	**Swirl Ring, Air/N2**	**1**
7	**220235**	**Electrode: HySpeed 200A**	**3**
7	**120667**	**Electrode: HT2000 200A Oxy LL**	**2**
7	**020415**	**Electrode, N2/H35**	**2**
7	**120547**	**Electrode: HT2000 100A LL**	**2**
8	020963	Water Tube:PAC200T/2000 Electd Cool	1
	027055	Lubricant, Silicon, 1/4 Oz Tube	1
	027194	Wrench, Nozzle, 3/4"	1
	027524	Wrench, Nozzle, 1"	1
	044027	O-Ring, Buna-N	2
	027347	Tool: Water Tube Removal	1
	004147	Electrode Gauge Assy	1

HT2000 Standard Consumable Parts Kit #028602

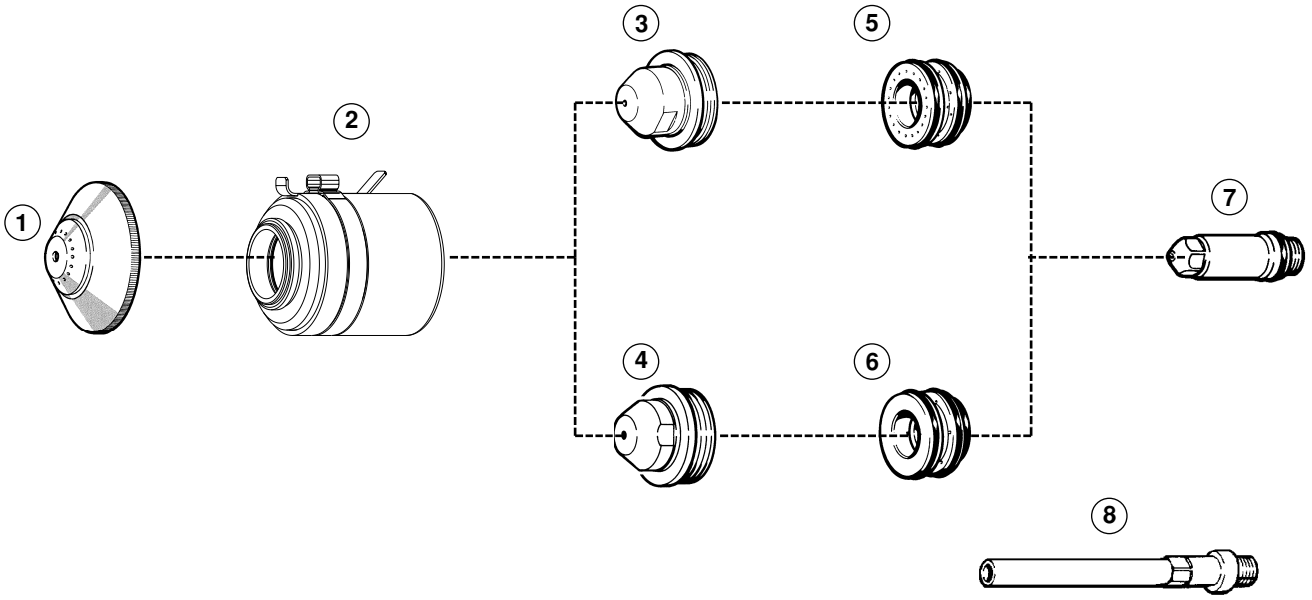

Figure 9-51 HT2000 Consumable Parts

Item	Part Number	Description	Qty.
	028602	**Kit: HT2000 Spare Parts**	
	001067	Box: Gra Plstc	1
1	**020424**	**Shield, 200A**	**1**
1	**020448**	**Shield, 100A**	**1**
2	**120837**	**Nozzle Retaining Cap, with IHS tab**	**1**
3	**020605**	**Nozzle, 200A .082 O2**	**5**
3	**020690**	**Nozzle, 100A .055 O2**	**3**
4	**020608**	**Nozzle, 200A .086 Air/N2/H35**	**3**
4	**020611**	**Nozzle, 100A .059 Air**	**3**
5	**120833**	**Swirl RIng: HT2000 O2**	**1**
6	**020607**	**Swirl Ring, Air/N2/H35**	**1**
6	**020613**	**Swirl Ring, Air**	**1**
6	**020679**	**Swirl Ring, Air/N2**	**1**
7	**120667**	**Electrode:HT2000 200A Oxy LL**	**5**
7	**020415**	**Electrode, N2/H35**	**5**
7	**120547**	**Electrode: HT2000 100A LL**	**3**
8	020963	Water Tube:PAC200T/2000 Electd Cool	1
	027055	Lubricant, Silicon, 1/4 Oz Tube	1
	027194	Wrench, Nozzle, 3/4"	1
	027524	Wrench, Nozzle, 1"	1
	044027	O-Ring, Buna-N	2
	027347	Tool: Water Tube Removal	1
	004147	Electrode Gauge Assy	1

HT2000 Beveling Consumable Parts Kit #128406

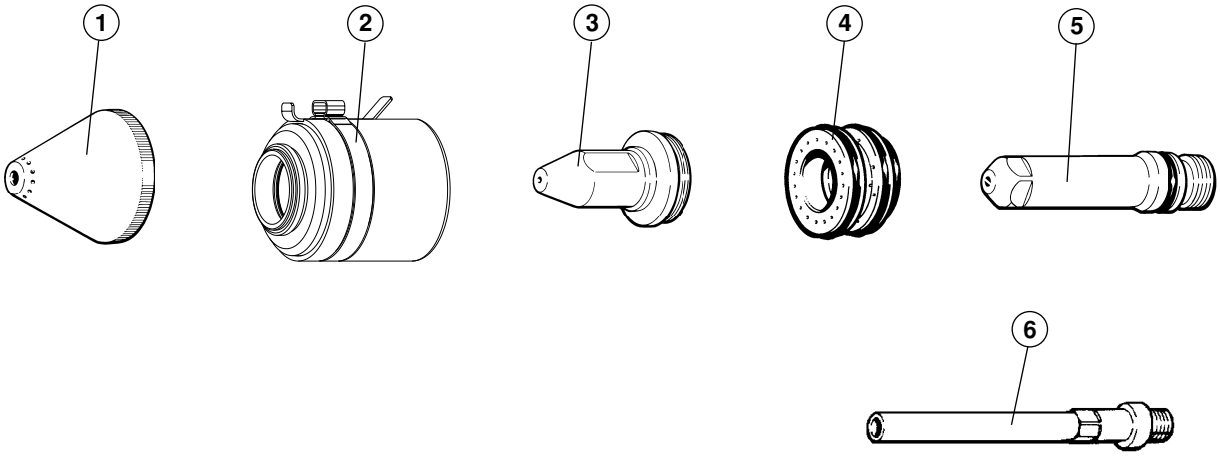

Figure 9-52 HT2000 Beveling Consumable Parts

Item	Part Number	Description	Qty.
	128406	**Kit: HT2000 Beveling Consumable Parts**	
	001067	Box: Gray Plastic	1
1	**120260**	**Shield: HT2000 Extended**	2
2	**120837**	**Nozzle Retaining Cap, with IHS tab**	1
3	**120259**	**Nozzle, HT2000 200A Oxygen Extended**	5
4	**120833**	**Swirl Ring: HT2000 O2**	2
5	**120258**	**Electrode:HT2000 Extended**	5
6	120257	Water Tube:Electd Cool Extended	1
	027055	Lubricant, Silicon, 1/4 Oz Tube	1
	027194	Wrench, Nozzle, 3/4"	1
	044027	O-Ring, Buna-N	2
	027347	Tool: Water Tube Removal	1

Lead Packages

HT2000 Power Supply to Remote High Frequency Console – Cables and Hoses

Part No.	Length
028604	25 ft (7.6 m)
028605	50 ft (15 m)
028606	75 ft (23 m)
028607	100 ft (30 m)
028608	150 ft (45 m)
028651	200 ft (61 m)

Remote High Frequency Console to Gas Console – Hoses

Part No.	Length
028683	10 ft (3 m)
028684	15 ft (4.6 m)
028685	20 ft (6.2 m)
028686	25 ft (7.6 m)
028687	30 ft (9.1 m)
028688	35 ft (10.6 m)
028689	50 ft (15 m)

Gas Console to Motor Valve Console – Hoses

Part No.	Length
028622	10 ft (3 m)
028623	15 ft (4.6 m)
028624	20 ft (6.2 m)
028625	25 ft (7.6 m)
028626	30 ft (9.1 m)
028627	35 ft (10.6 m)
028654	50 ft (15 m)
028655	75 ft (23 m)
028656	100 ft (30 m)

Recommended Spare Parts

Power Supply

Part Number	Description	Designation	Qty.	Pg. Ref.
005121	Pushbutton: 2 NO Green Illumin	PB1	1	9-6
005122	Pushbutton: 2 NC Red Extended	PB2	1	9-6
005149	Bulb: 120VAC	LT2	2	9-6
027080	Fan: 225CFM 120VAC 50/60 Hz	M2,M3	1	9-5
027079	Fan: 450-550 CFM 120VAC 50/60 Hz	M4	1	9-5
041762	PCB Assy: HT2000 Control II	PCB2	1	9-5
081039	Firmware: HT2000		2	9-5
041246	PCB Assy: Relay, HD1070/HT2000	PCB4	1	9-5
041294	PCB Assy: HT2000 THC Mother	PCB9	1	9-5
041186	PCB Assy: HT2000 THC	PCB10	1	9-5
005102	Thermostat: 160°C, 6 Amp	TS1	1	9-7
003138	Circuit Breaker, 2 Pole, 600V 100A	CB1	1	9-9
003139	Contactor: 90A 3 Pole, 120VAC	CON1	2	9-9
041534	PCB Assy: Power Distribution	PCB1	1	9-9
008317	Fuse: Semiconductor 125A, 250V	F1,F2	5	9-11
129118	CH130 Chopper SA	CH1,CH2	1	9-13
009684	Res: 4 Ohm 420W w/bracket	R6A,R6B	2	9-15
003021	Relay, 120VAC NO SPST	CR1	1	9-15
009794	Coil: Air Core Transformer, 8AWG	T1	1	9-17
029202	Current Sensor SA	CS1	1	9-17
129618	Switch, Level SA, 1/2 NPT	LS1	1	9-19
029323	Switch, Temp SA, 162 Deg. F	TS2	1	9-19
029361	Flowswitch SA, Reservoir	FS1	1	9-19
006046	Valve, Sol 240V 3/8 NPT NC	V1	1	9-19
128384	Kit: Pump, 70 GPH Positive Displace		1	9-19

Remote High Frequency Console

Part Number	Description	Designation	Qty.	Pg. Ref.
009224	Cap: Poly .22µF 10% 1000	C1,C2	2	9-21
009280	Cap: .022µF 15kV	C3,C4	2	9-23
004061	Electrode:Sprk Gap 1/8 x 1.6		3	9-23
029317	HV Transformer SA, 5000V, 20 ma	T1	1	9-21
005227	Switch, Pressure 12 psi	PS3	1	9-21
006032	Solenoid Valve:150# 1/4 FPT 120V NC	SV6	1	9-21
006106	Solenoid Valve: 120VAC 1/8FPT	SV7	1	9-21

Recommended Spare Parts (cont.)

Gas Console

Part Number	Description	Designation	Qty.	Pg. Ref.
005042	Tgl Switch: SP, Mom. ON/OFF/ON	S3	1	9-25
005243	Pressure Switch:80psi	PS1,PS2	1	9-25
005149	Bulb, 120VAC	LT1	1	9-25
006109	Sol. Valve:150# Manf 120V 2-Way NC	SV1-3	1	9-25
006064	Needle Valve: 1/8 FPT .125 Orifice	MV2,MV3,MV4	1	9-25
011053	Flowmeter: 7.8 GPM/44CFH	FM1,FM2	1	9-25
011058	Flowtube with Float /BP-8 Flt:0-10 SC Cal 2%		2	
011008	Shield: Plastic, for 011053 or 011056		2	
011081	Flowmeter Float Stop		2	
022020	Gauge: Pressure, 160 psi/bar, Panel Mnt	PG1,PG2	1	9-25
022008	Gauge: Pressure, 100 psi/bar, Panel Mnt	PG3	1	9-25

Motor Valve Console

Part Number	Description	Designation	Qty.	Pg. Ref.
006109	Sol. Valve:150# Manf 120V 2-Way NC	SV4	2	9-27
006063	Motor Valve: Electric 1/8FPT .125 Orifice	MV2	1	9-27

Section 10

WIRING DIAGRAMS

Introduction

This section contains the wiring diagrams for the system. When tracing a signal path or referencing with the **Parts List** or **Troubleshooting** sections, please be aware of the following format to assist you in understanding the wiring diagrams' organization:

- Sheet numbers are located in the lower right-hand corner.
- Page-to-page referencing is done in the following manner:

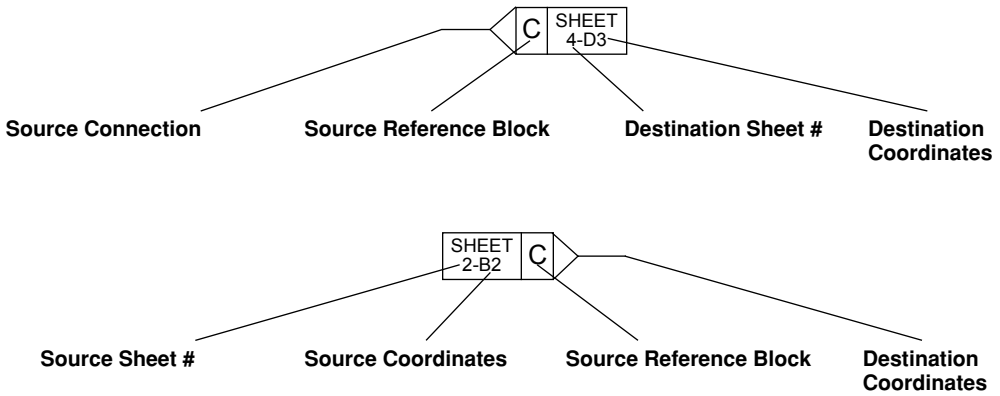

Destination and **Source Coordinates** refer to letters A-D on the Y-axis of each sheet and numbers 1-4 on the X-axis of each sheet. Lining up the coordinates will bring you to the source or destination blocks (similar to a road map).

- When referencing components to the wiring diagrams, designations may appear to be repeated. Ex. C1 appears on sheet 2 in the wiring diagrams in 2 separate locations. Sections of the power supply on that page are outlined with a dotted box and a label. Within different sections, the same designation may appear. Be certain to check the dotted box label when looking for or cross-referencing parts.

Wiring Diagram Symbols

Wiring diagram symbols and their identification precede the system wiring diagrams in this section.

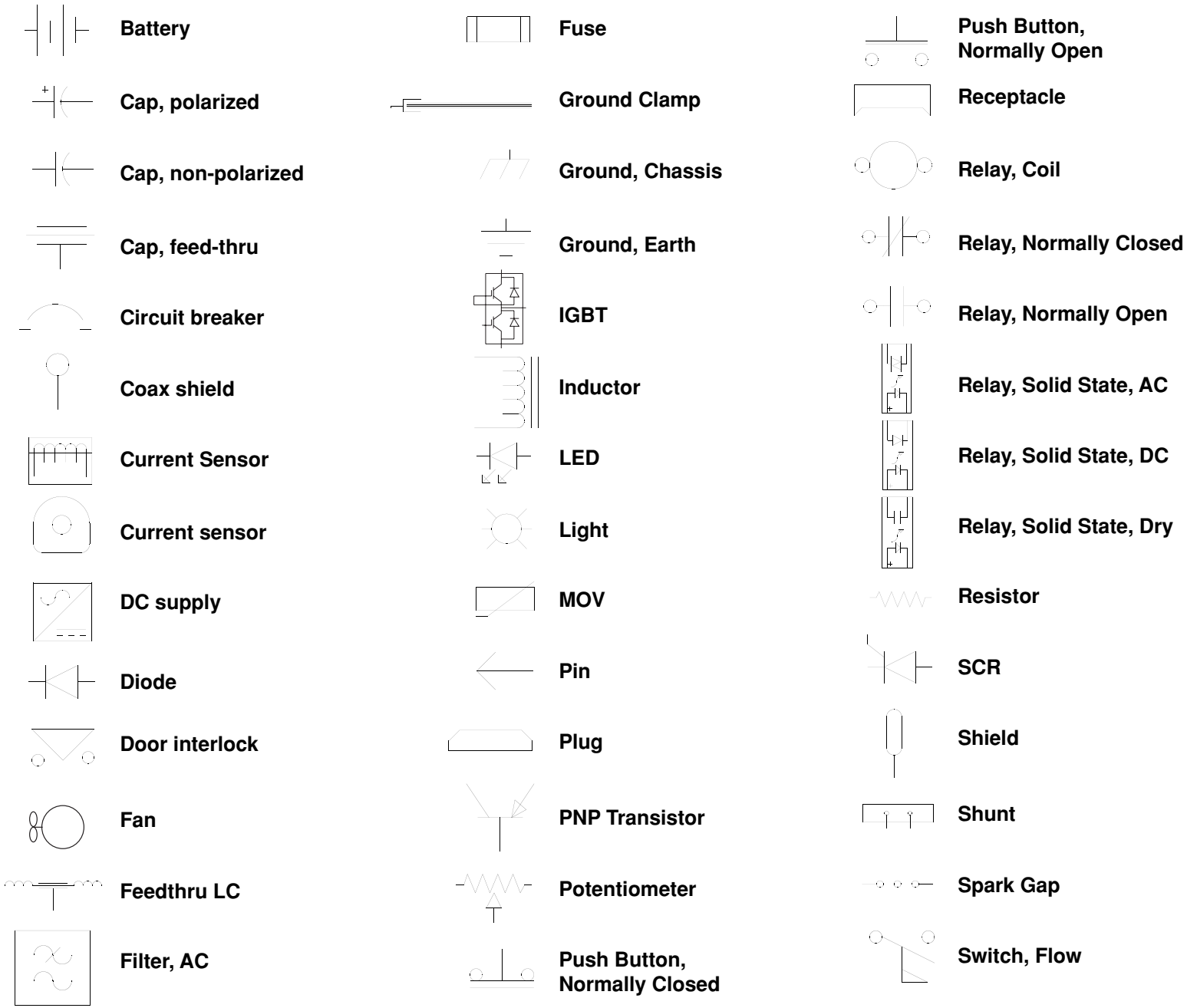
Battery
Cap, polarized
Cap, non-polarized
Cap, feed-thru
Circuit breaker
Coax shield
Current Sensor
Current sensor
DC supply
Diode
Door interlock
Fan
Feedthru LC
Filter, AC
Fuse
Ground Clamp
Ground, Chassis
Ground, Earth
IGBT
Inductor
LED
Light
MOV
Pin
Plug
PNP Transistor
Potentiometer
Push Button, Normally Closed
Push Button, Normally Open
Receptacle
Relay, Coil
Relay, Normally Closed
Relay, Normally Open
Relay, Solid State, AC
Relay, Solid State, DC
Relay, Solid State, Dry
Resistor
SCR
Shield
Shunt
Spark Gap
Switch, Flow

Torch Symbols

Electrode

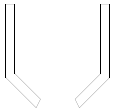

Nozzle

Shield

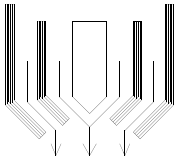

Torch

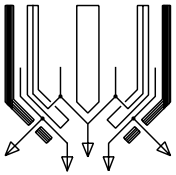

Torch, HyDefinition™

Time Delay Closed, NO/Off

Transformer

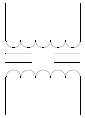

Transformer, Air Core

Transformer Coil

Triac

VAC Source

Valve, Solenoid

Voltage Source

Zener Diode

Switch, Level, Normally Closed

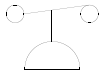

Switch, Pressure, Normally Closed

Switch, Pressure, Normally Open

Switch, 1 Pole, 1 Throw

Switch, 1 Pole, 2 Throw

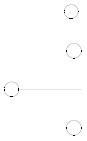

Switch, 1 Pole, 1 Throw, Center Off

Switch, Temperature, Normally Closed

Switch, Temperature, Normally Open

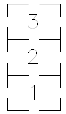

Terminal Block

Time Delay Closed, NC/Off

Time Delay Open, NO/Off

Time Delay Open, NC/On

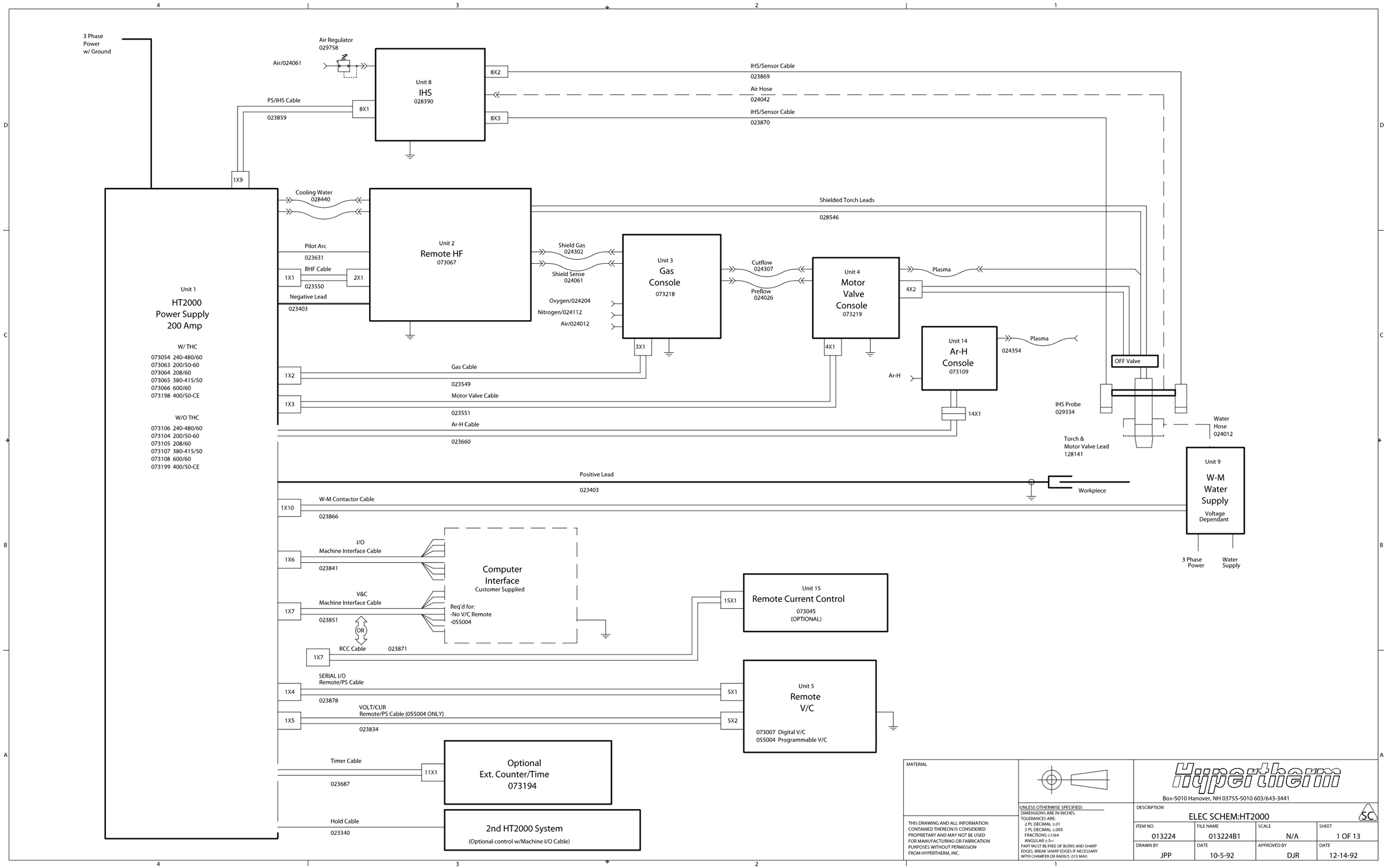

MATERIAL

THIS DRAWING AND ALL INFORMATION CONTAINED THEREON IS CONSIDERED PROPRIETARY AND MAY NOT BE USED FOR MANUFACTURING OR FABRICATION PURPOSES WITHOUT PERMISSION FROM HYPERTHERM, INC.

UNLESS OTHERWISE SPECIFIED:
DIMENSIONS ARE IN INCHES.
TOLERANCES ARE:
2 PL DECIMAL ±.01
3 PL DECIMAL ±.005
FRACTIONS ±1/64
ANGULAR ±.5°
PART MUST BE FREE OF BURRS AND SHARP EDGES. BREAK SHARP EDGES IF NECESSARY WITH CHAMFER OR RADIUS .015 MAX.

Hypertherm
Box-5010 Hanover, NH 03755-5010 603/643-3441

DESCRIPTION: ELEC SCHEM:HT2000

SC

ITEM NO.	FILE NAME	SCALE	SHEET
013224	013224B1	N/A	1 OF 13
DRAWN BY	DATE	APPROVED BY	DATE
JPP	10-5-92	DJR	12-14-92

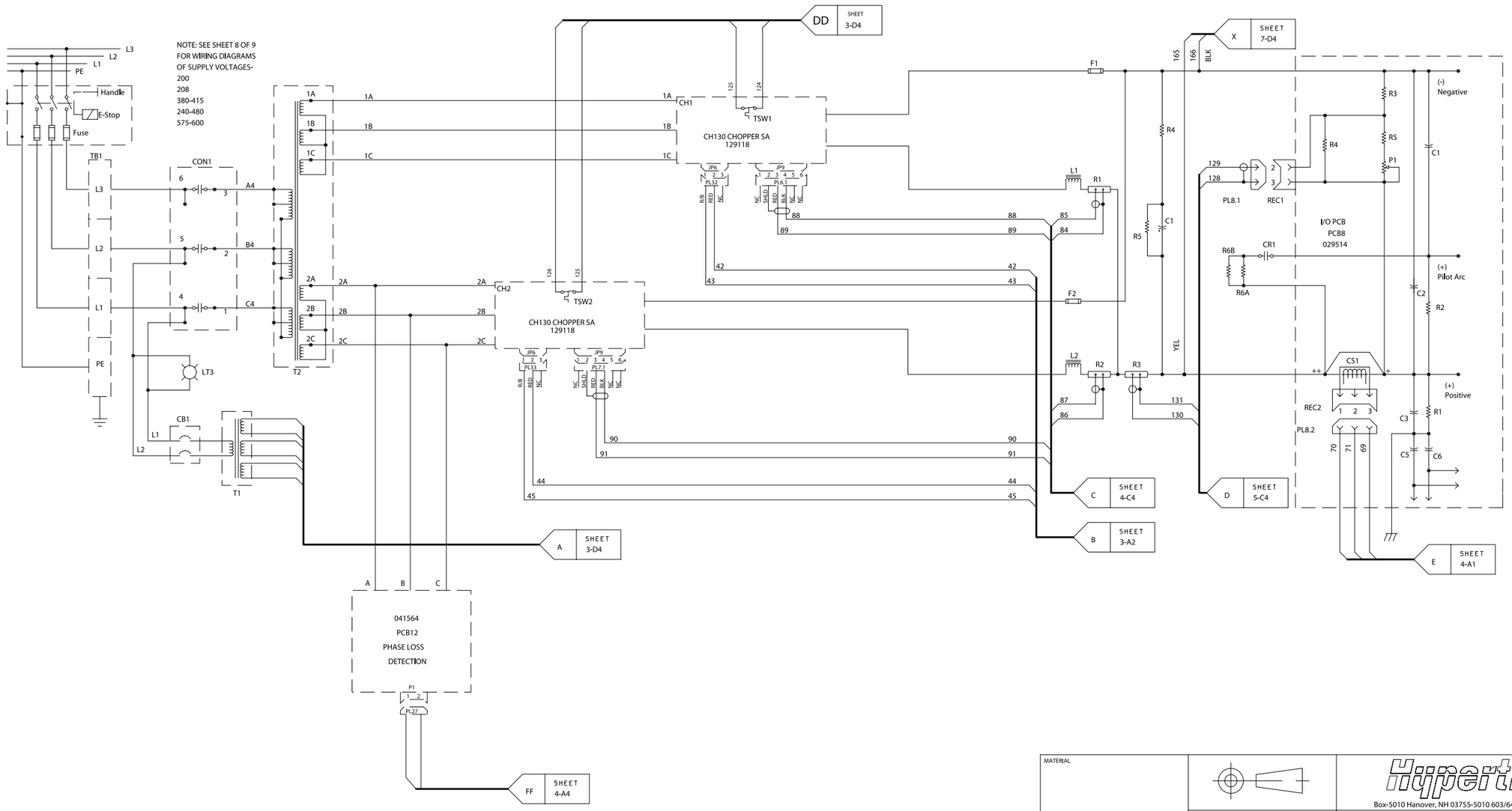

MATERIAL

THIS DRAWING AND ALL INFORMATION CONTAINED THEREON IS CONSIDERED PROPRIETARY AND MAY NOT BE USED FOR MANUFACTURING OR FABRICATION PURPOSES WITHOUT PERMISSION FROM HYPERTHERM, INC.

UNLESS OTHERWISE SPECIFIED:
DIMENSIONS ARE IN INCHES.
TOLERANCES ARE:
2 PL DECIMAL ±.01
3 PL DECIMAL ±.005
FRACTIONS ±1/64
ANGULAR ±.5=
PART MUST BE FREE OF BURRS AND SHARP EDGES. BREAK SHARP EDGES IF NECESSARY WITH CHAMFER OR RADIUS .015 MAX.

Hypertherm
Box-5010 Hanover, NH 03755-5010 603/643-3441

DESCRIPTION: ELEC SCHEM:HT2000

ITEM NO.	FILE NAME	SCALE	SHEET
013224	013224B2	N/A	2 OF 13
DRAWN BY	DATE	APPROVED BY	DATE
JPP	10-5-92	DJR	12-14-92

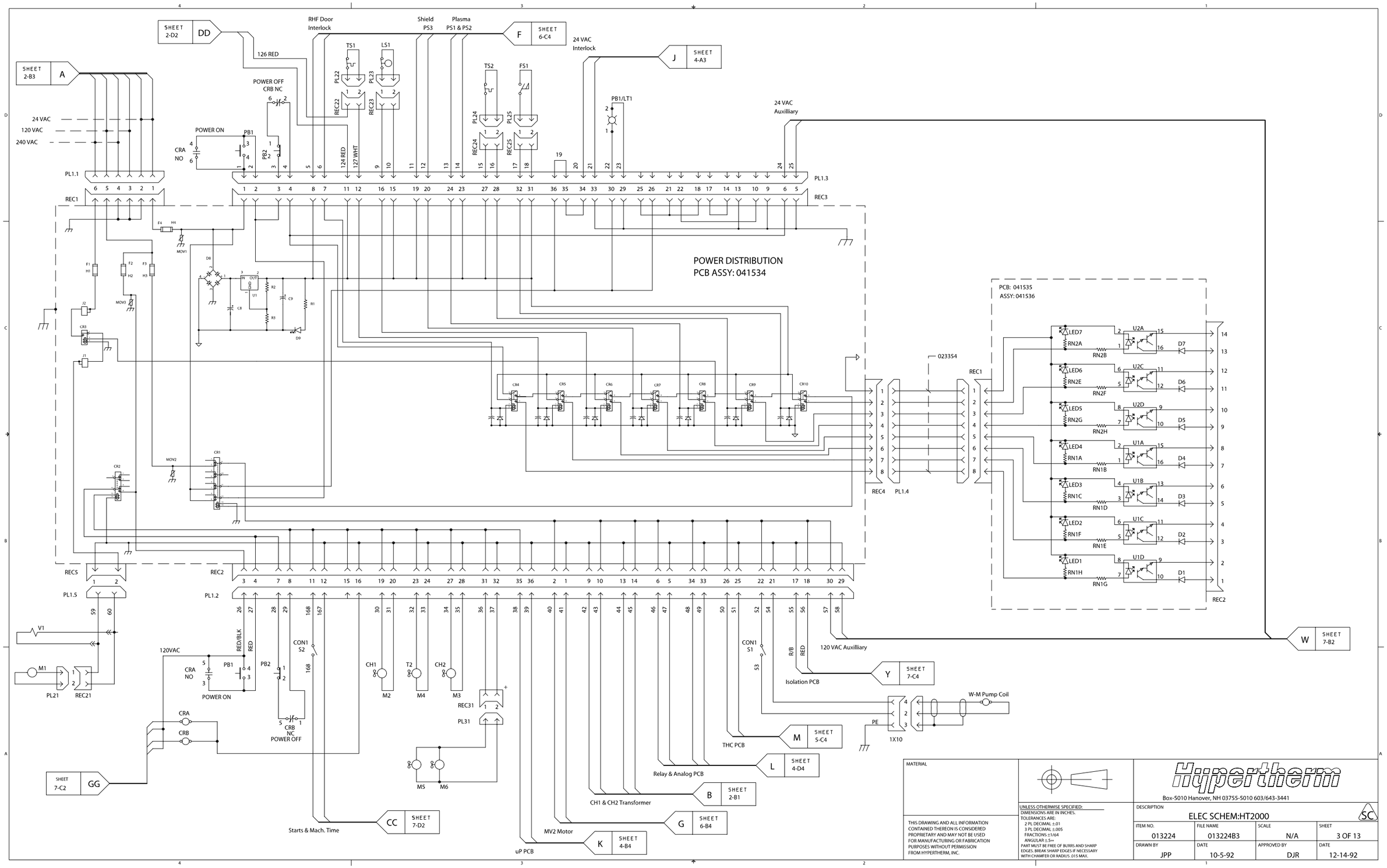

MATERIAL

THIS DRAWING AND ALL INFORMATION CONTAINED THEREON IS CONSIDERED PROPRIETARY AND MAY NOT BE USED FOR MANUFACTURING OR FABRICATION PURPOSES WITHOUT PERMISSION FROM HYPERTHERM, INC.

UNLESS OTHERWISE SPECIFIED:
DIMENSIONS ARE IN INCHES.
TOLERANCES ARE:
2 PL DECIMAL ±.01
3 PL DECIMAL ±.005
FRACTIONS ±1/64
ANGULAR ±.5°
PART MUST BE FREE OF BURRS AND SHARP EDGES. BREAK SHARP EDGES IF NECESSARY WITH CHAMFER OR RADIUS .015 MAX.

Hypertherm
Box-5010 Hanover, NH 03755-5010 603/643-3441

DESCRIPTION			
ELEC SCHEM:HT2000			SC
ITEM NO.	FILE NAME	SCALE	SHEET
013224	013224B3	N/A	3 OF 13
DRAWN BY	DATE	APPROVED BY	DATE
JPP	10-5-92	DJR	12-14-92

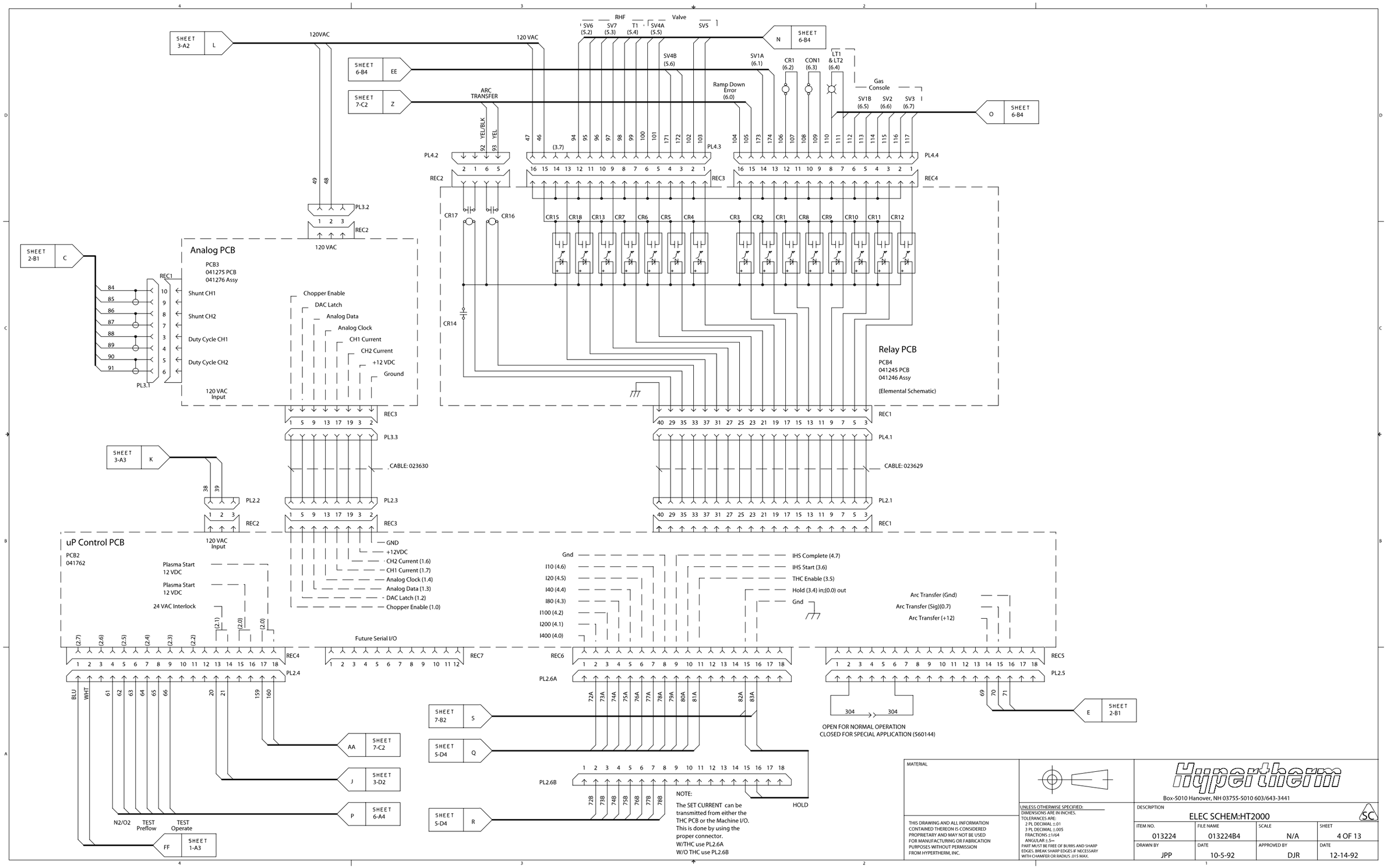

MATERIAL

THIS DRAWING AND ALL INFORMATION CONTAINED THEREON IS CONSIDERED PROPRIETARY AND MAY NOT BE USED FOR MANUFACTURING OR FABRICATION PURPOSES WITHOUT PERMISSION FROM HYPERTHERM, INC.

UNLESS OTHERWISE SPECIFIED:
DIMENSIONS ARE IN INCHES.
TOLERANCES ARE:
2 PL DECIMAL ±.01
3 PL DECIMAL ±.005
FRACTIONS ±1/64
ANGULAR ±.5=
PART MUST BE FREE OF BURRS AND SHARP EDGES. BREAK SHARP EDGES IF NECESSARY WITH CHAMFER OR RADIUS .015 MAX.

Hypertherm
Box-5010 Hanover, NH 03755-5010 603/643-3441

DESCRIPTION			
ELEC SCHEM:HT2000			
ITEM NO.	FILE NAME	SCALE	SHEET
013224	013224B4	N/A	4 OF 13
DRAWN BY	DATE	APPROVED BY	DATE
JPP	10-5-92	DJR	12-14-92

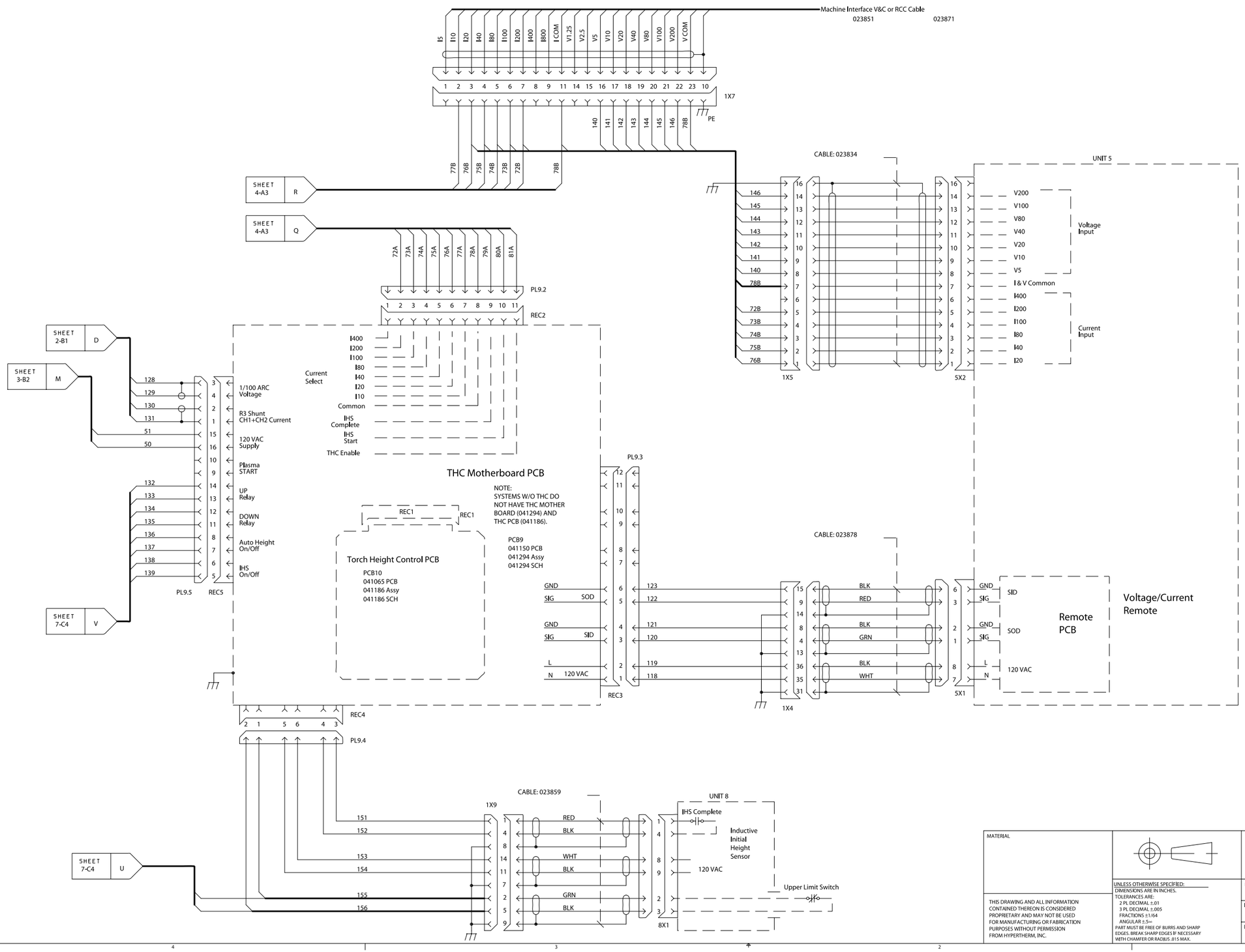

MATERIAL

THIS DRAWING AND ALL INFORMATION CONTAINED THEREON IS CONSIDERED PROPRIETARY AND MAY NOT BE USED FOR MANUFACTURING OR FABRICATION PURPOSES WITHOUT PERMISSION FROM HYPERTHERM, INC.

UNLESS OTHERWISE SPECIFIED:
DIMENSIONS ARE IN INCHES.
TOLERANCES ARE:
2 PL DECIMAL ±.01
3 PL DECIMAL ±.005
FRACTIONS ±1/64
ANGULAR ±.5=
PART MUST BE FREE OF BURRS AND SHARP EDGES. BREAK SHARP EDGES IF NECESSARY WITH CHAMFER OR RADIUS .015 MAX.

Hypertherm
Box-5010 Hanover, NH 03755-5010 603/643-3441

DESCRIPTION: ELEC SCHEM:HT2000

ITEM NO.	FILE NAME	SCALE	SHEET
013224	013224B5	N/A	5 OF 13
DRAWN BY	DATE	APPROVED BY	DATE
JPP	10-5-92	DJR	12-14-92

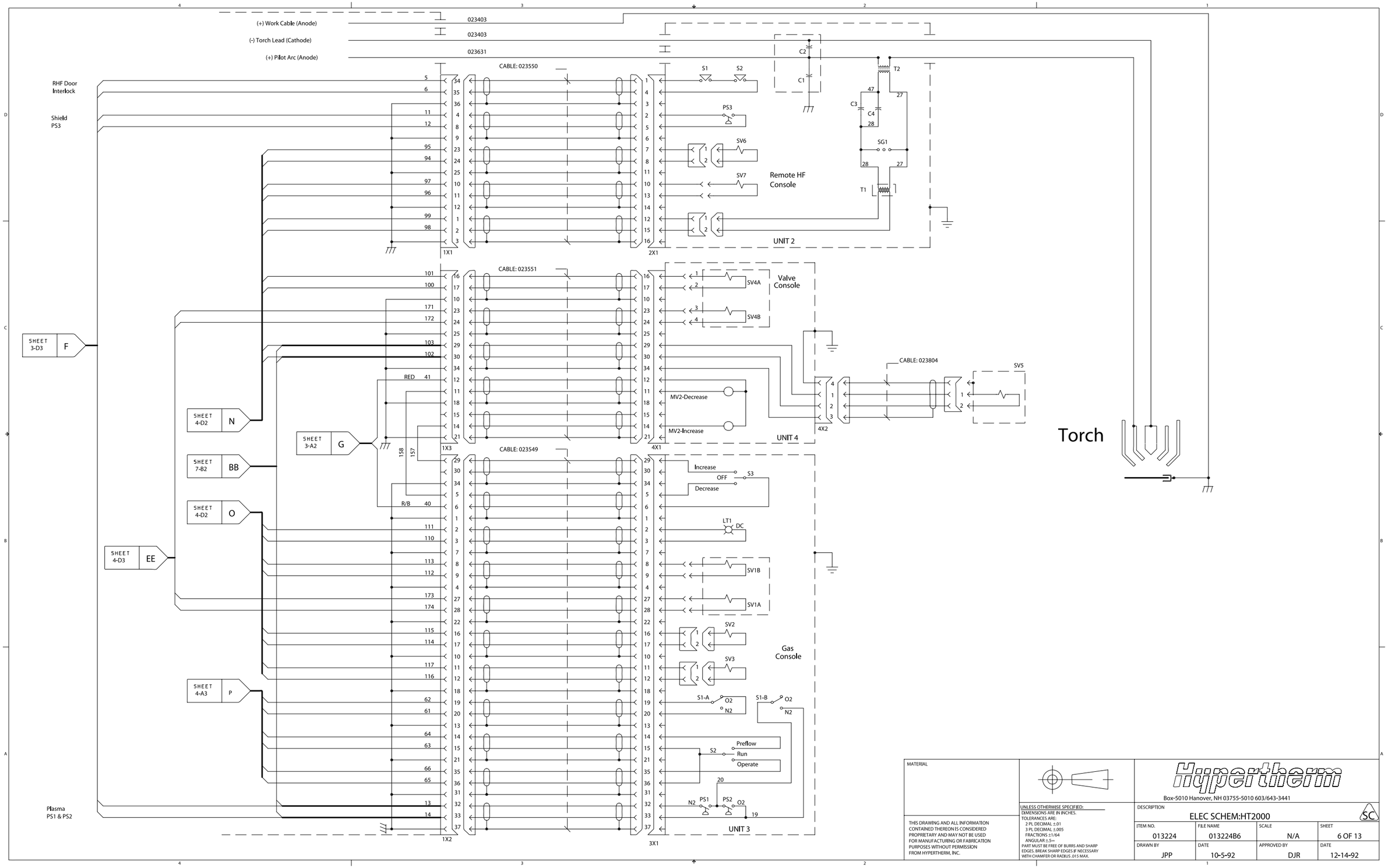

MATERIAL

THIS DRAWING AND ALL INFORMATION CONTAINED THEREON IS CONSIDERED PROPRIETARY AND MAY NOT BE USED FOR MANUFACTURING OR FABRICATION PURPOSES WITHOUT PERMISSION FROM HYPERTHERM, INC.

UNLESS OTHERWISE SPECIFIED:
DIMENSIONS ARE IN INCHES.
TOLERANCES ARE:
2 PL DECIMAL ±.01
3 PL DECIMAL ±.005
FRACTIONS ±1/64
ANGULAR ±.5~
PART MUST BE FREE OF BURRS AND SHARP EDGES. BREAK SHARP EDGES IF NECESSARY WITH CHAMFER OR RADIUS .015 MAX.

Hypertherm
Box-5010 Hanover, NH 03755-5010 603/643-3441

DESCRIPTION: ELEC SCHEM:HT2000

ITEM NO.	FILE NAME	SCALE	SHEET
013224	013224B6	N/A	6 OF 13
DRAWN BY	DATE	APPROVED BY	DATE
JPP	10-5-92	DJR	12-14-92

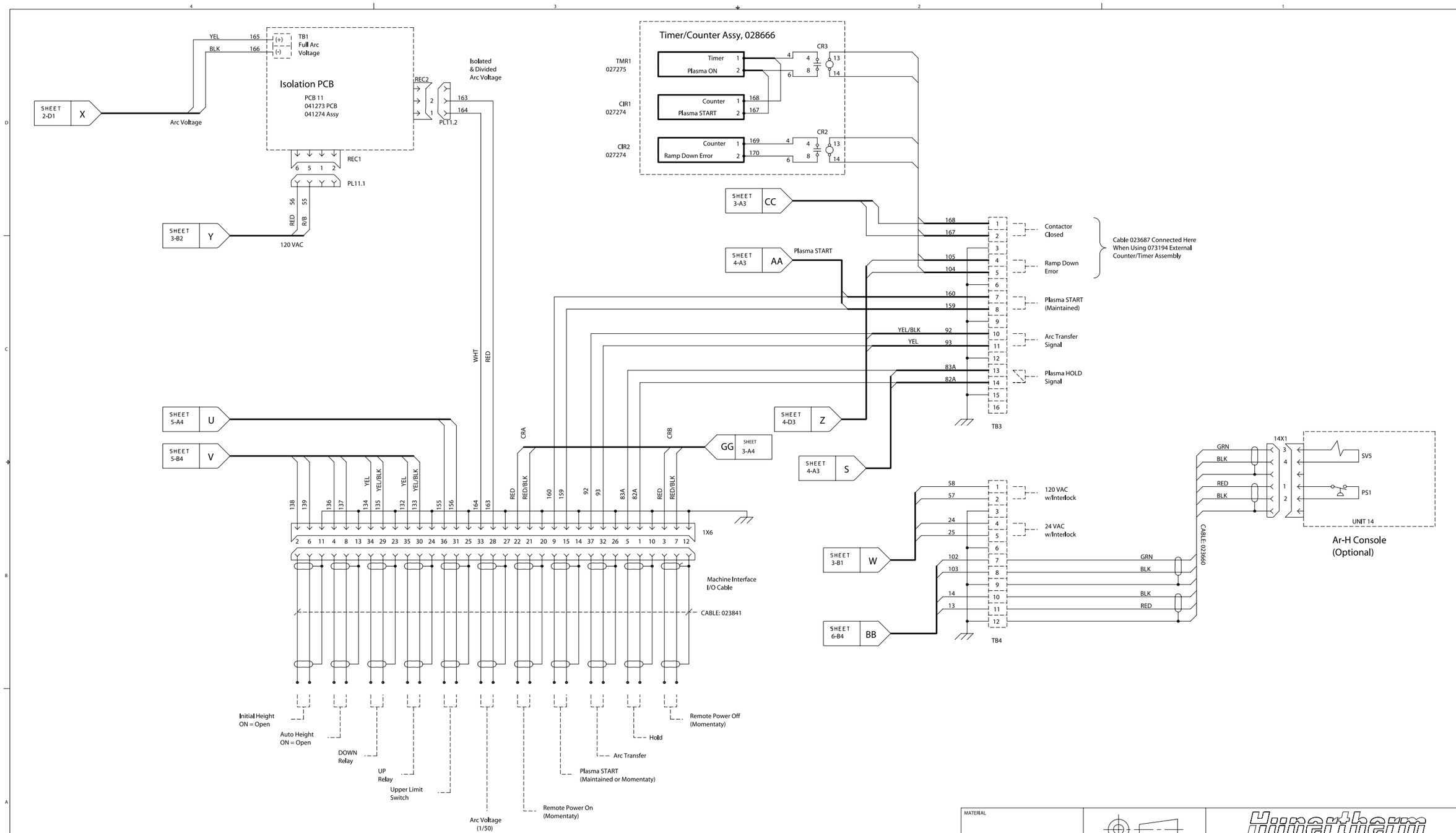

MATERIAL

THIS DRAWING AND ALL INFORMATION CONTAINED THEREON IS CONSIDERED PROPRIETARY AND MAY NOT BE USED FOR MANUFACTURING OR FABRICATION PURPOSES WITHOUT PERMISSION FROM HYPERTHERM, INC.

UNLESS OTHERWISE SPECIFIED:
DIMENSIONS ARE IN INCHES.
TOLERANCES ARE:
2 PL DECIMAL ±.01
3 PL DECIMAL ±.005
FRACTIONS ±1/64
ANGULAR ±.5°
PART MUST BE FREE OF BURRS AND SHARP EDGES. BREAK SHARP EDGES IF NECESSARY WITH CHAMFER OR RADIUS .015 MAX.

Hypertherm
Box-5010 Hanover, NH 03755-5010 603/643-3441

DESCRIPTION: ELEC SCHEM:HT2000

ITEM NO.	FILE NAME	SCALE	SHEET
013224	013224B7	N/A	7 OF 13

DRAWN BY	DATE	APPROVED BY	DATE
JPP	10-5-92	DJR	12-14-92

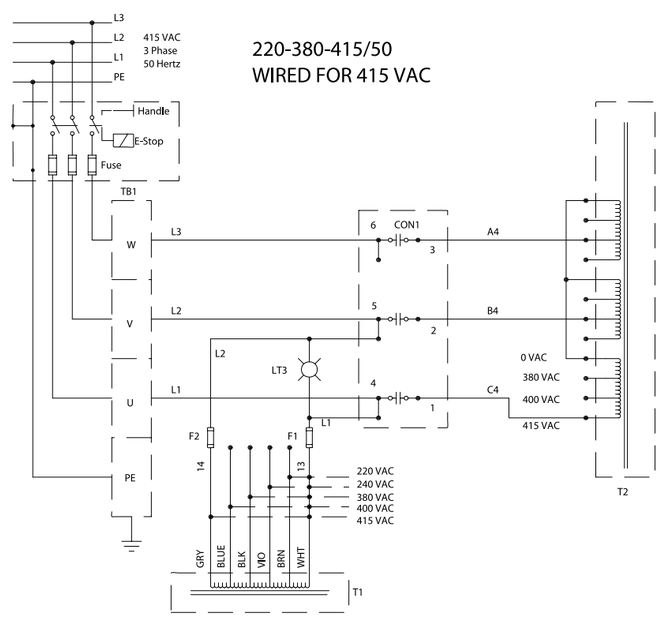

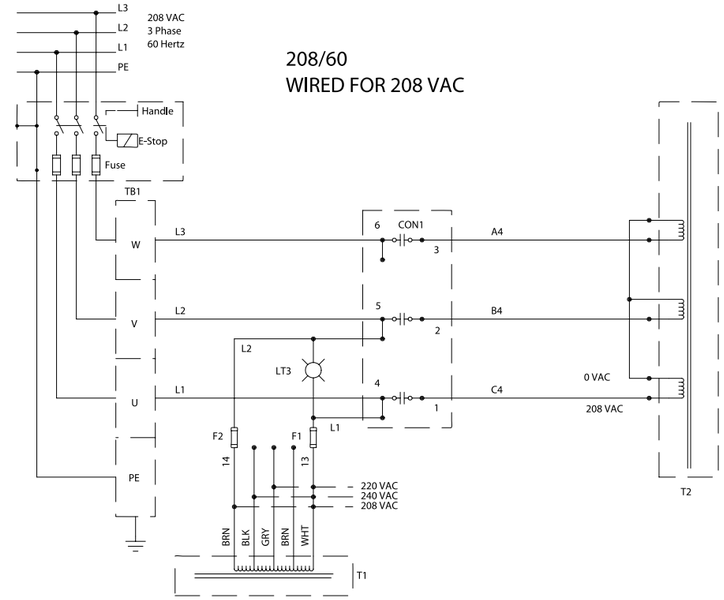

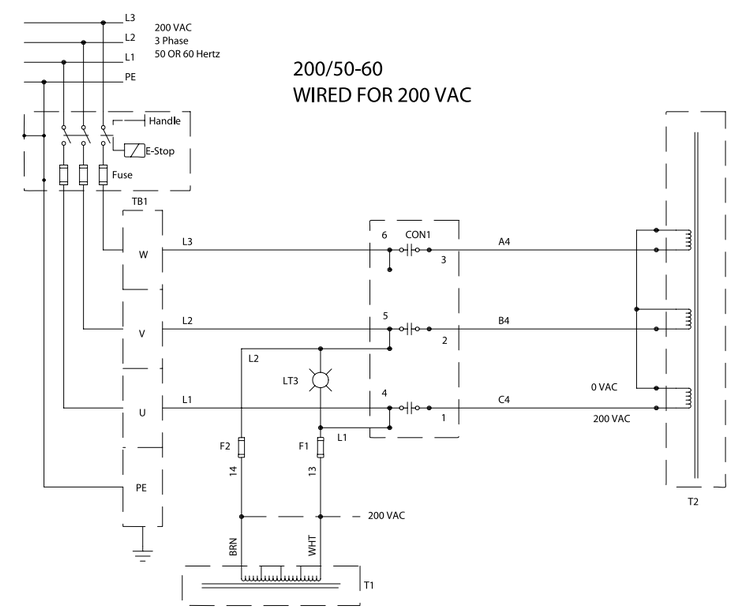

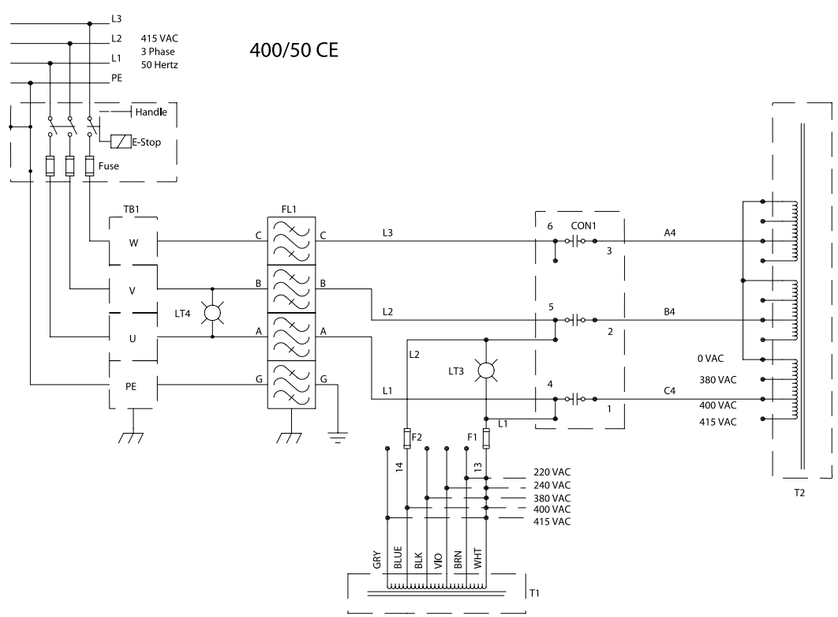

MATERIAL

THIS DRAWING AND ALL INFORMATION CONTAINED THEREON IS CONSIDERED PROPRIETARY AND MAY NOT BE USED FOR MANUFACTURING OR FABRICATION PURPOSES WITHOUT PERMISSION FROM HYPERTHERM, INC.

UNLESS OTHERWISE SPECIFIED:
DIMENSIONS ARE IN INCHES.
TOLERANCES ARE:
2 PL DECIMAL ±.01
3 PL DECIMAL ±.005
FRACTIONS ±1/64
ANGULAR ±.5=
PART MUST BE FREE OF BURRS AND SHARP EDGES. BREAK SHARP EDGES IF NECESSARY WITH CHAMFER OR RADIUS .015 MAX.

Hypertherm
Box-5010 Hanover, NH 03755-5010 603/643-3441

DESCRIPTION: ELEC SCHEM:HT2000

ITEM NO.	FILE NAME	SCALE	SHEET
013224	013224B8	N/A	8 OF 13
DRAWN BY	DATE	APPROVED BY	DATE
JPP	10-5-92	DJR	12-14-92

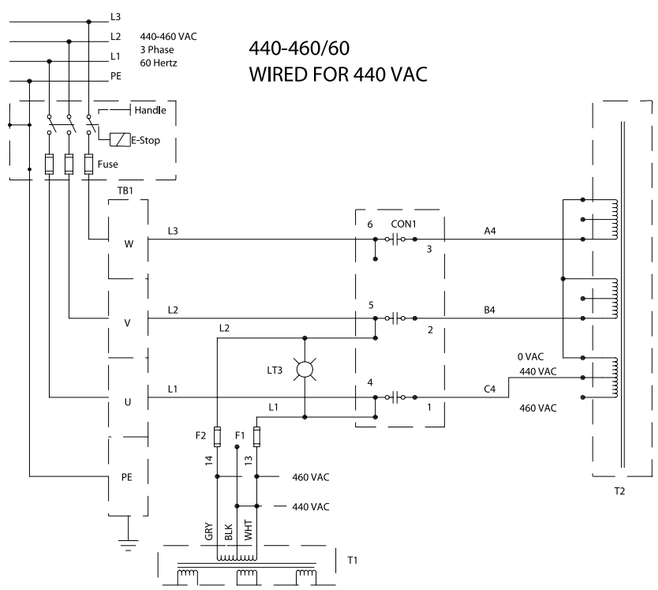

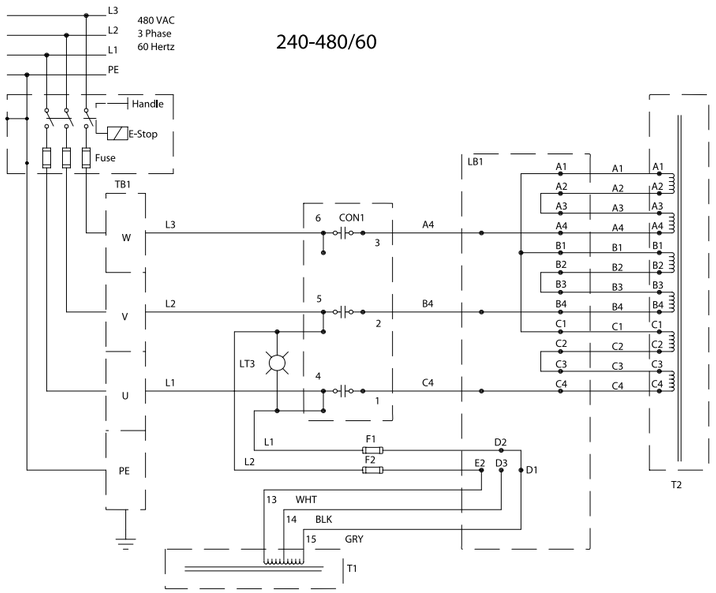

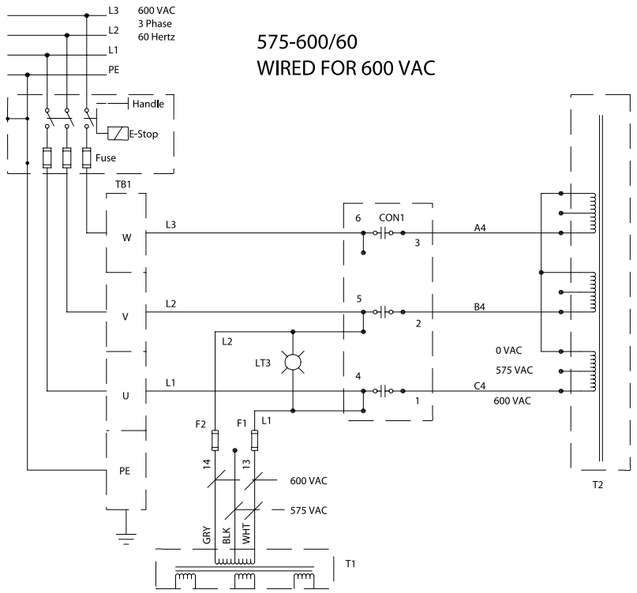

MATERIAL

THIS DRAWING AND ALL INFORMATION CONTAINED THEREON IS CONSIDERED PROPRIETARY AND MAY NOT BE USED FOR MANUFACTURING OR FABRICATION PURPOSES WITHOUT PERMISSION FROM HYPERTHERM, INC.

UNLESS OTHERWISE SPECIFIED:
DIMENSIONS ARE IN INCHES.
TOLERANCES ARE:
2 PL DECIMAL ±.01
3 PL DECIMAL ±.005
FRACTIONS ±1/64
ANGULAR ±.5°
PART MUST BE FREE OF BURRS AND SHARP EDGES. BREAK SHARP EDGES IF NECESSARY WITH CHAMFER OR RADIUS .015 MAX.

Hypertherm
Box-5010 Hanover, NH 03755-5010 603/643-3441

DESCRIPTION: ELEC SCHEM:HT2000

SC

ITEM NO.	FILE NAME	SCALE	SHEET
013224	013224B9	N/A	9 OF 13
DRAWN BY	DATE	APPROVED BY	DATE
JPP	10-5-92	DJR	12-14-92

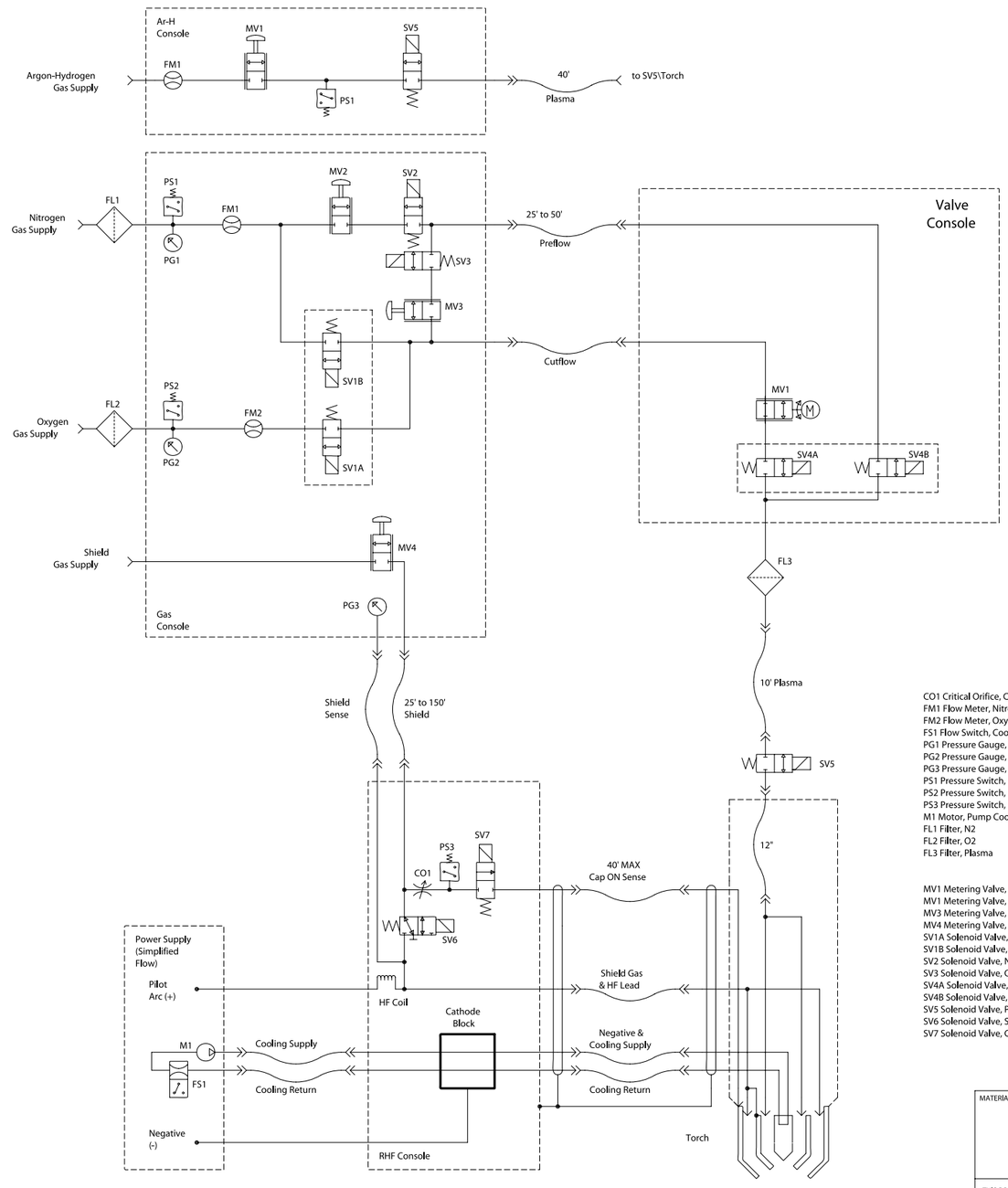

CO1 Critical Orifice, Cap OFF
FM1 Flow Meter, Nitrogen
FM2 Flow Meter, Oxygen
FS1 Flow Switch, Cooling
PG1 Pressure Gauge, Nitrogen Inlet
PG2 Pressure Gauge, Oxygen Inlet
PG3 Pressure Gauge, Plasma
PS1 Pressure Switch, Nitrogen Inlet
PS2 Pressure Switch, Oxygen Inlet
PS3 Pressure Switch, Shield/Cap OFF
M1 Motor, Pump Cooling
FL1 Filter, N2
FL2 Filter, O2
FL3 Filter, Plasma

MV1 Metering Valve, Plasma Motor
MV1 Metering Valve, N2 Preflow
MV3 Metering Valve, O2 Preflow
MV4 Metering Valve, Shield
SV1A Solenoid Valve, O2
SV1B Solenoid Valve, N2 Cutflow
SV2 Solenoid Valve, N2 Prelfow
SV3 Solenoid Valve, O2 Preflow
SV4A Solenoid Valve, Cutflow
SV4B Solenoid Valve, Preflow
SV5 Solenoid Valve, Plasma OFF
SV6 Solenoid Valve, Shield ON
SV7 Solenoid Valve, Cap OFF

MATERIAL

THIS DRAWING AND ALL INFORMATION CONTAINED THEREON IS CONSIDERED PROPRIETARY AND MAY NOT BE USED FOR MANUFACTURING OR FABRICATION PURPOSES WITHOUT PERMISSION FROM HYPERTHERM, INC.

UNLESS OTHERWISE SPECIFIED:
DIMENSIONS ARE IN INCHES.
TOLERANCES ARE:
2 PL DECIMAL ±.01
3 PL DECIMAL ±.005
FRACTIONS ±1/64
ANGULAR ±.5=
PART MUST BE FREE OF BURRS AND SHARP EDGES. BREAK SHARP EDGES IF NECESSARY WITH CHAMFER OR RADIUS .015 MAX.

Hypertherm
Box-5010 Hanover, NH 03755-5010 603/643-3441

DESCRIPTION
ELEC SCHEM:HT2000

ITEM NO.	FILE NAME	SCALE	SHEET
013224	013224B10	N/A	10 OF 13
DRAWN BY	DATE	APPROVED BY	DATE
JPP	10-5-92	DJR	12-14-92

NITROGEN/AIR
TIMING CHART

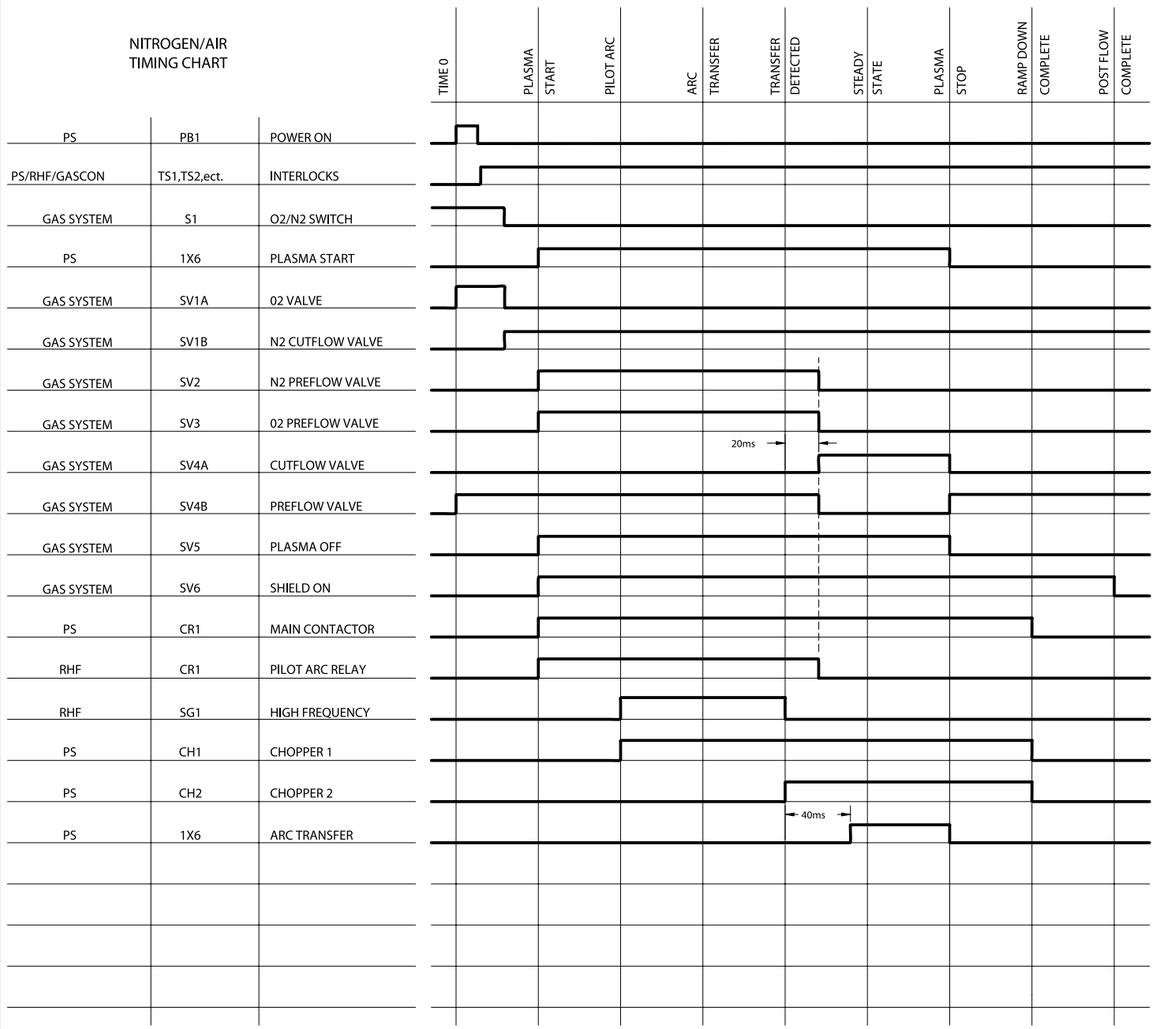

Solenoid valve status for N_2 timing chart

N_2 or Air Cutting Mode			
Component	Idle	Cutflow	Preflow
SV1A	OFF	OFF	OFF
SV1B	ON	ON	ON
SV2	OFF	OFF	ON
SV3	OFF	OFF	OFF
SV4A	OFF	ON	OFF
SV4B	OFF	OFF	ON
SV5	OFF	ON	ON
SV6	OFF	ON	ON
SV7	ON	ON	ON

NITROGEN/AIR OPERATION
CURRENT, PRESSURE,
AND VOLTAGE WAVEFORMS

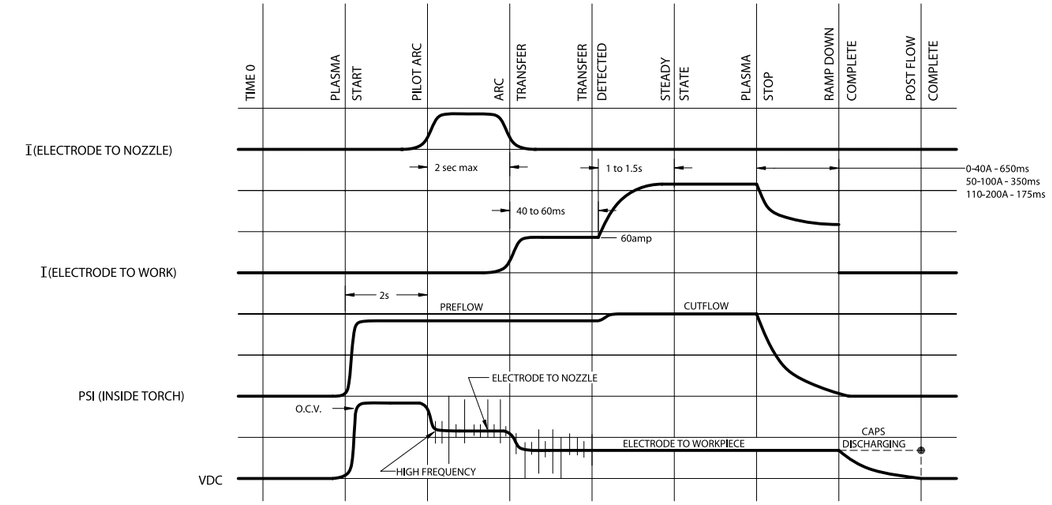

MATERIAL

THIS DRAWING AND ALL INFORMATION CONTAINED THEREON IS CONSIDERED PROPRIETARY AND MAY NOT BE USED FOR MANUFACTURING OR FABRICATION PURPOSES WITHOUT PERMISSION FROM HYPERTHERM, INC.

UNLESS OTHERWISE SPECIFIED:
DIMENSIONS ARE IN INCHES.
TOLERANCES ARE:
2 PL DECIMAL ±.01
3 PL DECIMAL ±.005
FRACTIONS ±1/64
ANGULAR ±.5°
PART MUST BE FREE OF BURRS AND SHARP EDGES. BREAK SHARP EDGES IF NECESSARY WITH CHAMFER OR RADIUS .015 MAX.

Hypertherm
Box-5010 Hanover, NH 03755-5010 603/643-3441

DESCRIPTION			
ELEC SCHEM:HT2000			SC
ITEM NO.	FILE NAME	SCALE	SHEET
013224	013224B11	N/A	11 OF 13
DRAWN BY	DATE	APPROVED BY	DATE
JPP	10-5-92	DJR	12-14-92

100/200A 02
TIMING CHART

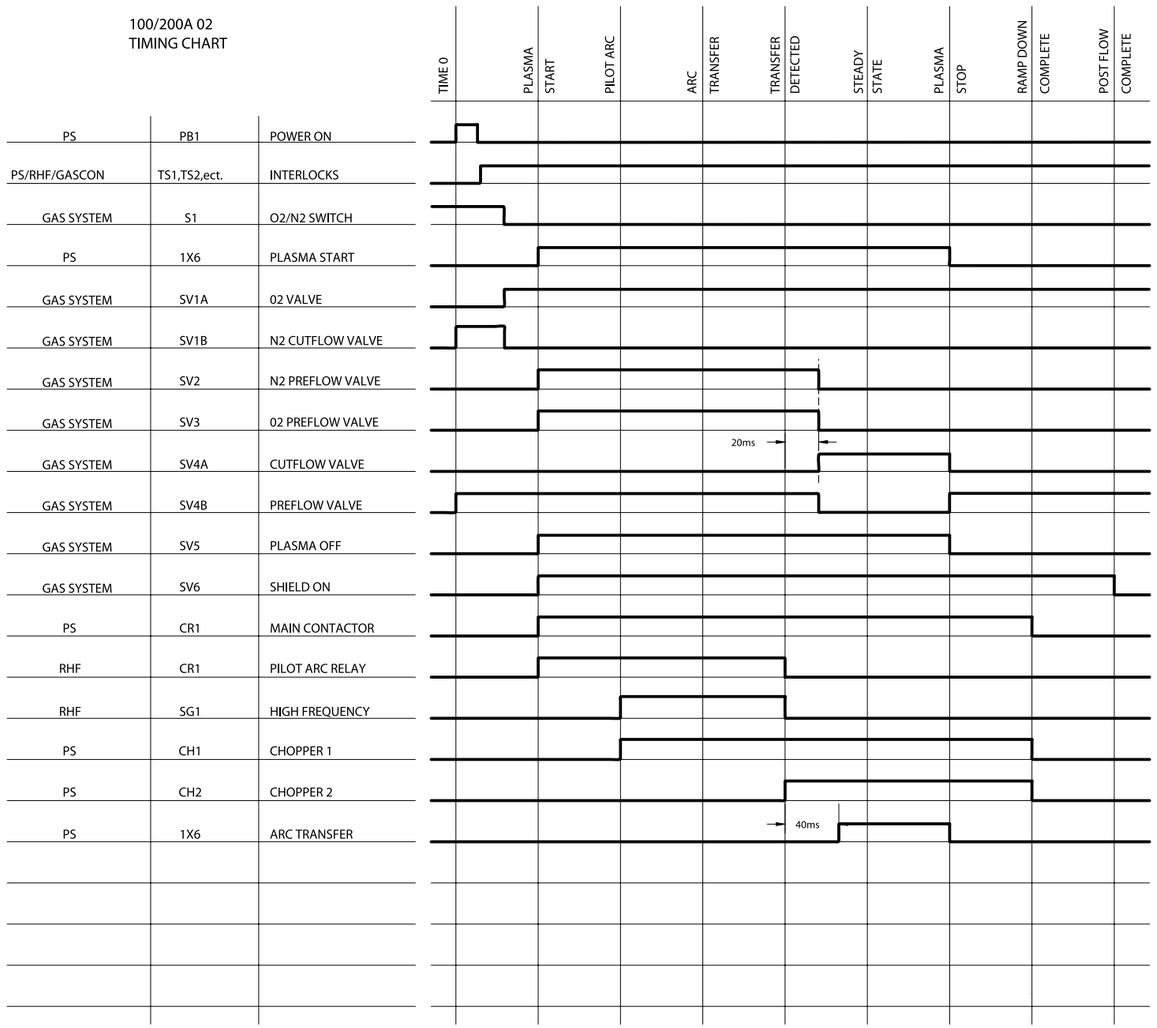

Solenoid valve status for O_2 timing chart

O_2 or Air Cutting Mode			
Component	Idle	Cutflow	Preflow
SV1A	ON	ON	ON
SV1B	OFF	OFF	OFF
SV2	OFF	OFF	ON
SV3	OFF	OFF	ON
SV4B	OFF	OFF	ON
SV4B	OFF	OFF	ON
SV5	OFF	ON	ON
SV6	OFF	ON	ON
SV7	ON	ON	ON

OXYGEN OPERATION
CURRENT, PRESSURE,
AND VOLTAGE WAVEFORMS

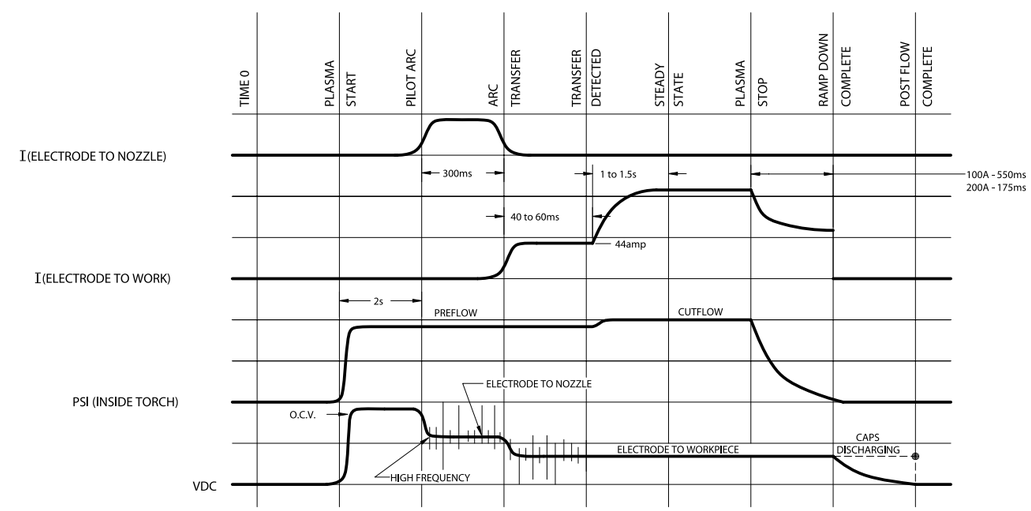

MATERIAL

THIS DRAWING AND ALL INFORMATION CONTAINED THEREON IS CONSIDERED PROPRIETARY AND MAY NOT BE USED FOR MANUFACTURING OR FABRICATION PURPOSES WITHOUT PERMISSION FROM HYPERTHERM, INC.

UNLESS OTHERWISE SPECIFIED:
DIMENSIONS ARE IN INCHES.
TOLERANCES ARE:
2 PL DECIMAL ±.01
3 PL DECIMAL ±.005
FRACTIONS ±1/64
ANGULAR ±.5=
PART MUST BE FREE OF BURRS AND SHARP EDGES. BREAK SHARP EDGES IF NECESSARY WITH CHAMFER OR RADIUS .015 MAX.

Hypertherm
Box-5010 Hanover, NH 03755-5010 603/643-3441

DESCRIPTION			
ELEC SCHEM:HT2000			SC
ITEM NO.	FILE NAME	SCALE	SHEET
013224	013224B12	N/A	12 OF 13
DRAWN BY	DATE	APPROVED BY	DATE
JPP	10-5-92	DJR	12-14-92

50A 02
TIMING CHART

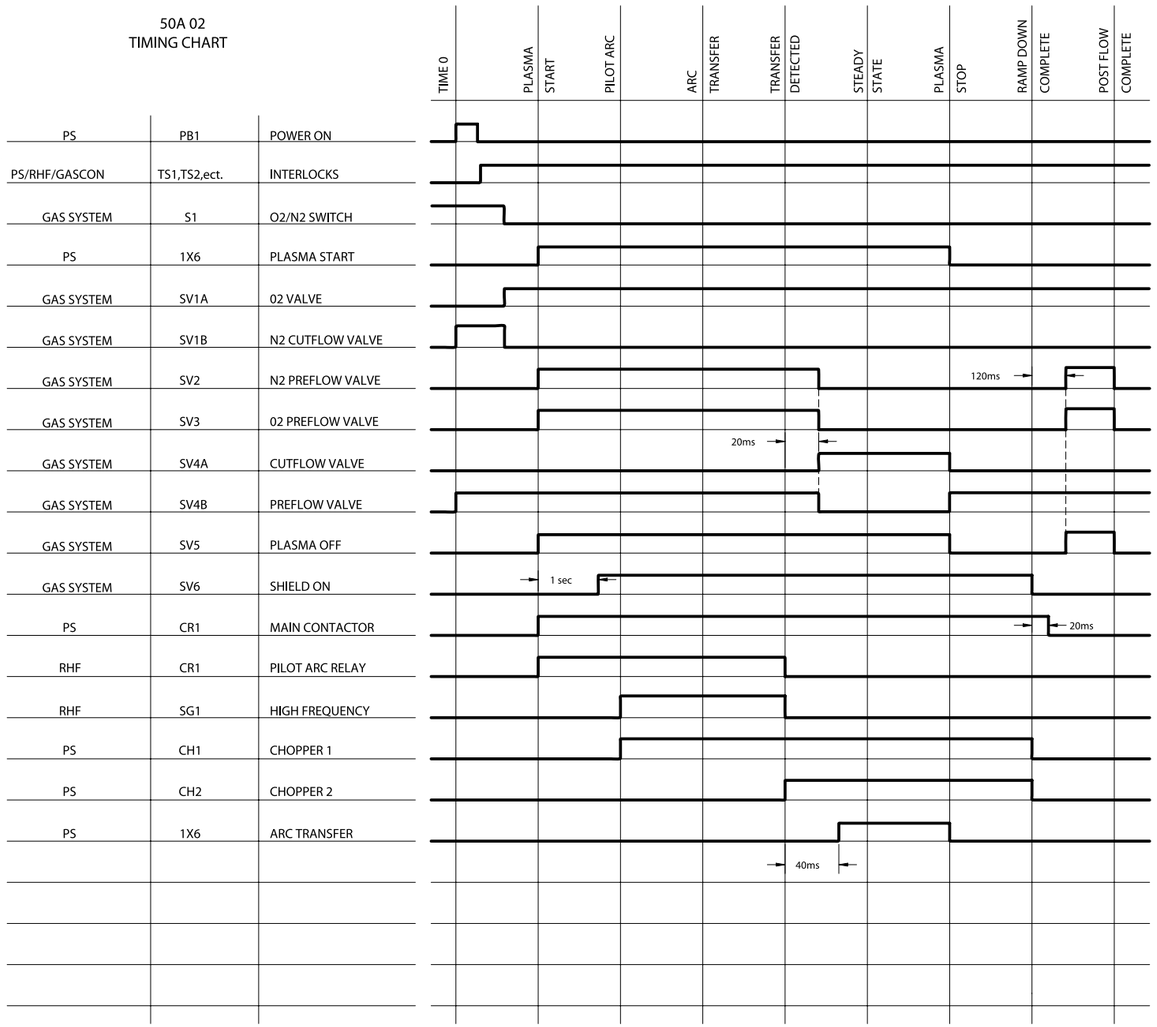

Solenoid valve status for O_2 timing chart

O_2 or Air Cutting Mode			
Component	Idle	Cutflow	Preflow
SV1A	ON	ON	ON
SV1B	OFF	OFF	OFF
SV2	OFF	OFF	ON
SV3	OFF	OFF	ON
SV4B	OFF	OFF	ON
SV4B	OFF	OFF	ON
SV5	OFF	ON	ON
SV6	OFF	ON	ON
SV7	ON	ON	ON

OXYGEN OPERATION
CURRENT, PRESSURE,
AND VOLTAGE WAVEFORMS

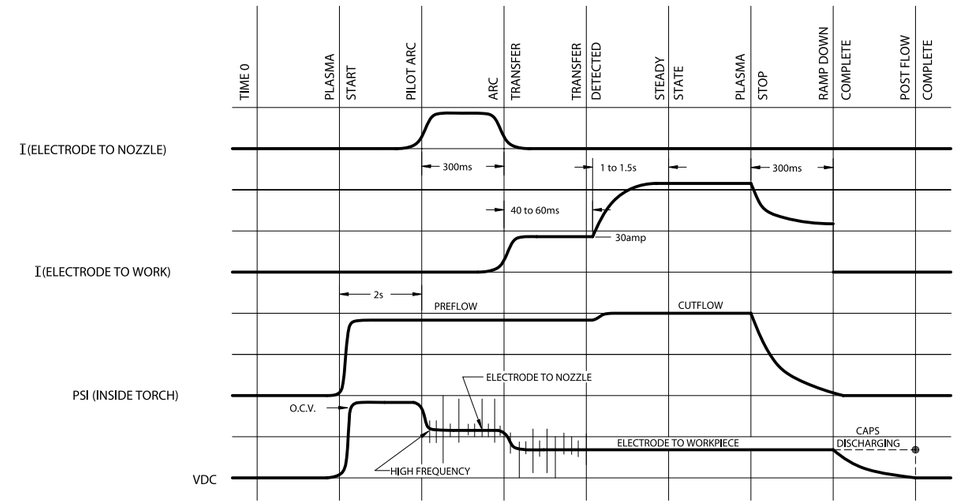

MATERIAL

THIS DRAWING AND ALL INFORMATION CONTAINED THEREON IS CONSIDERED PROPRIETARY AND MAY NOT BE USED FOR MANUFACTURING OR FABRICATION PURPOSES WITHOUT PERMISSION FROM HYPERTHERM, INC.

UNLESS OTHERWISE SPECIFIED:
DIMENSIONS ARE IN INCHES.
TOLERANCES ARE:
2 PL DECIMAL ±.01
3 PL DECIMAL ±.005
FRACTIONS ±1/64
ANGULAR ±.5=
PART MUST BE FREE OF BURRS AND SHARP EDGES. BREAK SHARP EDGES IF NECESSARY WITH CHAMFER OR RADIUS .015 MAX.

Hypertherm
Box-5010 Hanover, NH 03755-5010 603/643-3441

DESCRIPTION			
ELEC SCHEM:HT2000			SC
ITEM NO.	FILE NAME	SCALE	SHEET
013224	013224B13	N/A	13 OF 13
DRAWN BY	DATE	APPROVED BY	DATE
JPP	10-5-92	DJR	12-14-92

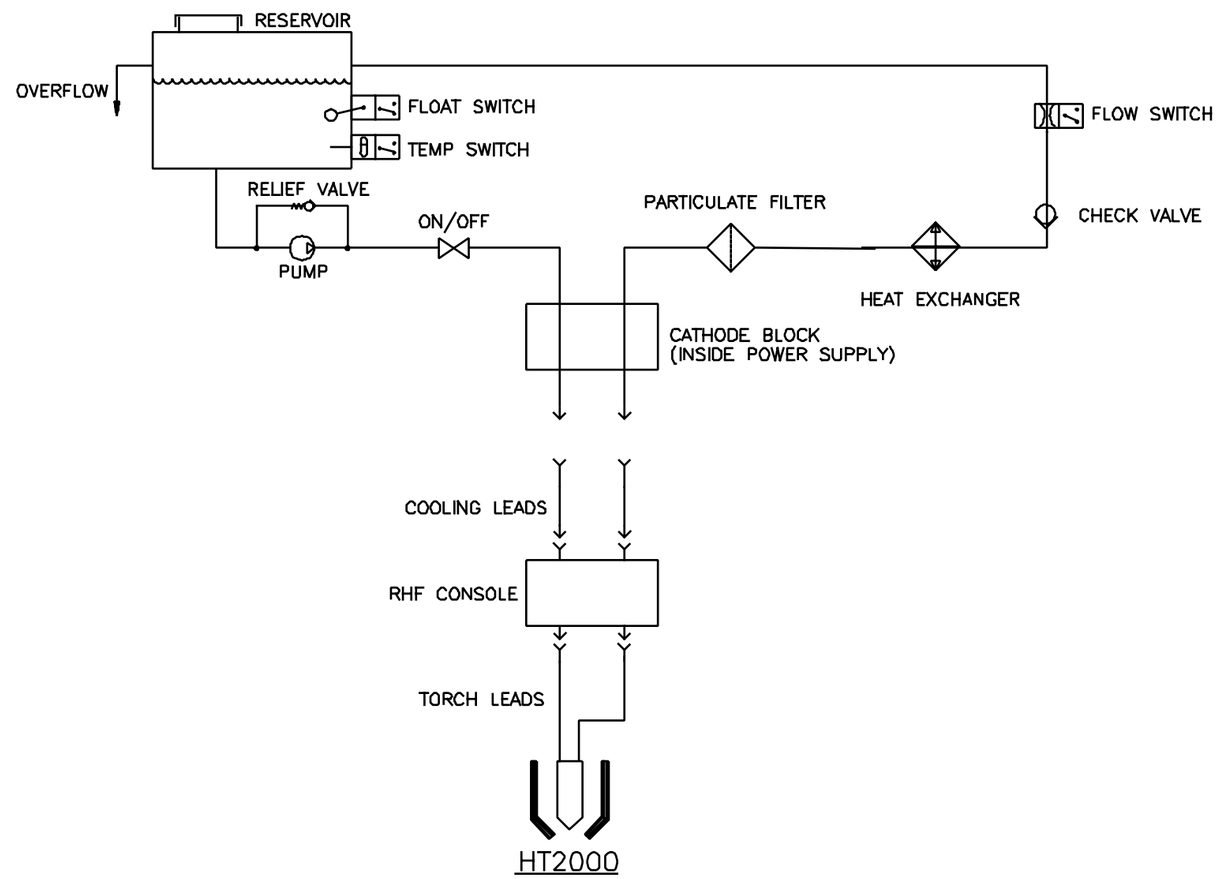

Coolant Flow Diagram

Appendix A

IEC SYMBOLS

IEC Symbols Used

	Direct Current (DC).
	Alternating current (AC).
	Plasma cutting torch.
	AC input power connection.
	The terminal for the external protective (earthed) conductor.
1~	A chopper-based power source.
	Anode (+) work clamp.
	Temperature switch.
	Pressure switch.
	Plasma torch in the TEST position (cooling and cutting gas exiting nozzle).
I	The power is on.
O	The power is off.
	Volt/amp curve.

Appendix B

PROPYLENE GLYCOL SAFETY DATA
BENZOTRIAZOLE SAFETY DATA

In this section:

Propylene Glycol Safety Data
Section 1 Chemical Product and Company Identification b-2
Section 2 Information on Ingredients b-2
Section 3 Hazards Identification....b-2
Section 4 First Aid Measures b-3
Section 5 Fire Fighting Measures b-3
Section 6 Accidental Release Measures....b-3
Section 7 Handling and Storage b-3
Section 8 Exposure Controls / Personal Protection b-4
Section 9 Physical and Chemical Properties b-4
Section 10 Stability and Reactivity....b-4
Section 11 Toxicological Information b-4
Section 12 Ecological Information....b-5
Section 13 Disposal Considerations b-5
Section 14 Transport Information....b-5
Section 15 Regulatory Information....b-5
Section 16 Other Information b-5

Benzotriazole (COBRATEC) Safety Data
Section I b-7
Section II Ingredients b-7
Section III Physical Data b-7
Section IV Fire and Explosion Hazard Data....b-8
Section V Health Hazard Data b-8
Section VI Reactivity Data....b-9
Section VII Spill or Leak Procedures....b-9
Section VIII Special Protective Information b-9
Section IX Special Precautions b-10
Section X Regulatory Status b-10

MATERIAL SAFETY DATA SHEET

SECTION 1 -- CHEMICAL PRODUCT AND COMPANY IDENTIFICATION

PRODUCT NAME	HYPERTHERM TORCH COOLANT

PRODUCT CODE	

ISSUE DATE	11-22-96

EMERGENCY TELEPHONE NUMBERS

MANUFACTURER **HYPERTHERM**
STREET ADDRESS **Etna Rd.**
CITY, STATE, ZIP **Hanover, NH 03755**

Transportation: (703) 527-3887 *
*** For spill, leak, fire or transport accident emergencies.**
Product Information: (603) 643-5638

SECTION 2 -- COMPOSITION / INFORMATION ON INGREDIENTS

HAZARDOUS COMPONENT	CAS No.	% by wt.	EXPOSURE LIMITS OSHA PEL	ACGIH TLV	NIOSH REL
Propylene glycol	0057-55-6	< 50	None Established	None Established	None Established

SECTION 3 -- HAZARDS IDENTIFICATION

EMERGENCY OVERVIEW	Can cause eye and skin irritation. Harmful if swallowed..

POTENTIAL HEALTH EFFECTS	
INGESTION	Can cause irritation, nausea, stomach distress, vomiting and diarrhea.
INHALATION	May cause mild irritation of nose, throat, and respiratory tract.
EYE CONTACT	Causes eye irritation.
SKIN CONTACT	Prolonged or repeated contact may cause skin irritation.

SECTION 4 -- FIRST AID MEASURES

INGESTION	DO NOT induce vomiting, but give one or two glasses of water to drink and get medical attention.
INHALATION	No specific treatment is necessary, since this material is not likely to be hazardous by inhalation.
EYE CONTACT	Immediately flush eye with cool running water for 15 minutes. If irritation persists, get medical attention.
SKIN CONTACT	Wash with soap and water. If irritation develops or persists, get medical attention.
NOTE TO PHYSICIAN	Treatment based on judgment of the physician in response to reactions of the patient.

SECTION 5 -- FIRE FIGHTING MEASURES

FLASH POINT / METHOD	None / N.A.	FLAMMABLE LIMITS	Not flammable or combustible
EXTINGUISHING MEDIA	If involved in a fire, use foam, carbon dioxide or dry chemical extinguisher. Water may cause frothing.		
SPECIAL FIRE FIGHTING PROCEDURES	None		
FIRE AND EXPLOSION HAZARDS	None		

SECTION 6 -- ACCIDENTAL RELEASE MEASURES

RESPONSE TO SPILLS	Small spills: Flush into a sanitary sewer. Mop up residue and rinse area thoroughly with water. Large spills: Dike or dam the spill. Pump into containers or soak up on inert absorbent.

SECTION 7 -- HANDLING AND STORAGE

HANDLING PRECAUTIONS	Keep container in upright position.
STORAGE PRECAUTIONS	Store in a cool dry place. Keep from freezing.

SECTION 8 -- EXPOSURE CONTROLS / PERSONAL PROTECTION

HYGIENIC PRACTICES	Normal procedures for good hygiene.
ENGINEERING CONTROLS	Good general ventilation should be sufficient to control airborne levels. Facilities using this product should be equipped with an eyewash station.

PERSONAL PROTECTIVE EQUIPMENT

X	**RESPIRATOR**	Recommended for prolonged use in confined areas with poor ventilation
X	**GOGGLES / FACE SHIELD**	Recommended; goggles should protect against chemical splash
	APRON	Not necessary
X	**GLOVES**	Recommended; PVC, Neoprene or Nitrile acceptable
	BOOTS	Not necessary

SECTION 9 -- PHYSICAL AND CHEMICAL PROPERTIES

APPEARANCE	Clear liquid	BOILING POINT	160 deg F
ODOR	Not Appreciable	FREEZING POINT	Not established
pH	4.6-5.0(100% concentrate)	VAPOR PRESSURE	Not applicable
SPECIFIC GRAVITY	1.0	VAPOR DENSITY	Not applicable
SOLUBILITY IN WATER	Complete	EVAPORATION RATE	Not determined

SECTION 10 -- STABILITY AND REACTIVITY

CHEMICAL STABILITY		**STABLE**	X		**UNSTABLE**	
CONDITIONS TO AVOID	No special precautions beyond standard safe industrial practices.					
INCOMPATIBILITY	Avoid contact with strong mineral acids and strong oxidizers, including chlorine bleach.					
HAZARDOUS PRODUCTS OF DECOMPOSITION	Carbon monoxide may be formed during combustion.					
POLYMERIZATION		**WILL NOT OCCUR**	X		**MAY OCCUR**	
CONDITIONS TO AVOID	Not applicable					

SECTION 11 -- TOXICOLOGICAL INFORMATION

CARCINOGENICITY

	THIS PRODUCT CONTAINS A KNOWN OR SUSPECTED CARCINOGEN
X	**THIS PRODUCT DOES NOT CONTAIN ANY KNOWN OR ANTICIPATED CARCINOGENS ACCORDING TO THE CRITERIA OF THE NTP ANNUAL REPORT ON CARCINOGENS AND OSHA 29 CFR 1910, Z**

OTHER EFFECTS

ACUTE	Not determined
CHRONIC	Not determined

SECTION 12 -- ECOLOGICAL INFORMATION

BIODEGRADABILITY		CONSIDERED BIODEGRADABLE	X		NOT BIODEGRADABLE	
BOD / COD VALUE	Not established					
ECOTOXICITY	No data available					

SECTION 13 -- DISPOSAL CONSIDERATIONS

WASTE DISPOSAL METHOD	Product that cannot be used according to the label must be disposed of as a hazardous waste at an approved hazardous waste management facility. Empty containers may be triple rinsed, then offered for recycling or reconditioning; or puncture and dispose of in a sanitary landfill.								
RCRA CLASSIFICATION	NO								
RECYCLE CONTAINER		YES	X		CODE	2 - HDPE		NO	

SECTION 14 -- TRANSPORT INFORMATION

DOT CLASSIFICATION		HAZARDOUS			NOT HAZARDOUS	X
DESCRIPTION	Not applicable					

SECTION 15 -- REGULATORY INFORMATION

USA REGULATORY STATUS

	EPA REGISTERED (UNDER FIFRA)	
	FDA REGULATED	
	KOSHER	
	SARA TITLE III MATERIAL	
	USDA AUTHORIZED	

SECTION 16 -- OTHER INFORMATION

NFPA CLASSIFICATION

1	BLUE	HEALTH HAZARD
1	RED	FLAMMABILITY
0	YELLOW	REACTIVITY
--	WHITE	SPECIAL HAZARD

Information contained in this MSDS refers only to the specific material designated and does not relate to any process or use involving other materials. This information is based on data believed to be reliable, and the Product is intended to be used in a manner that is customary and reasonably foreseeable. Since actual use and handling are beyond our control, no warranty, express or implied, is made and no liability is assumed by Hypertherm in connection with the use of this information.

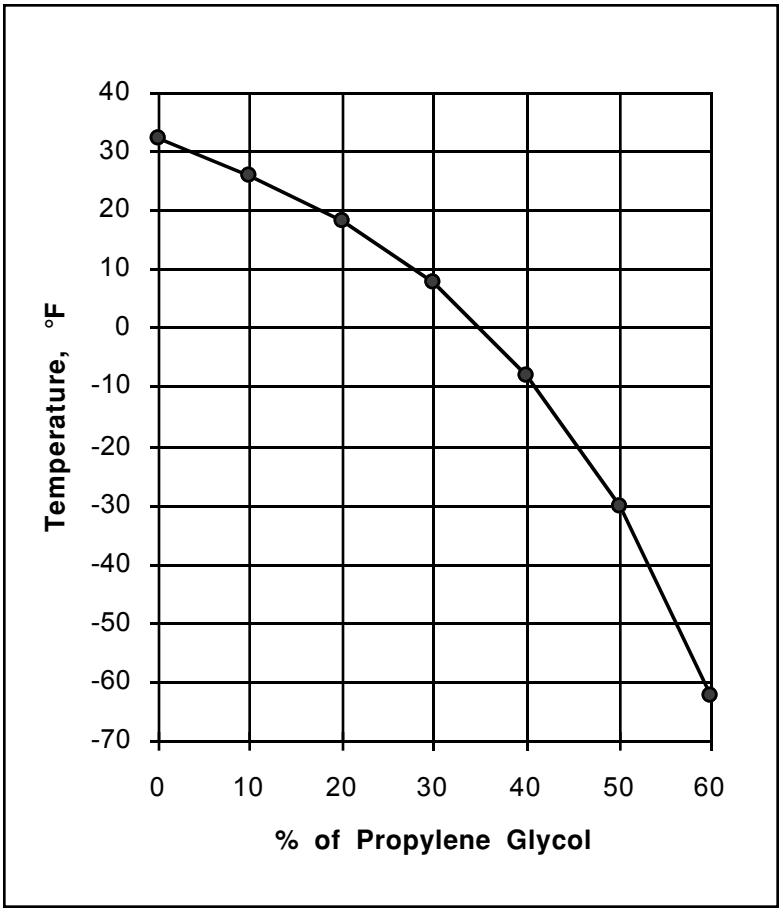

Figure b-1 Freezing Point of Propylene Glycol Solution

SECTION I

MANUFACTURER:	PMC SPECIALTIES GROUP, INC.
ADDRESS:	501 Murray Road Cincinnati, OH 45217
EMERGENCY TELEPHONE:	(513) 242-3300
FOR TRANSPORTATION EMERGENCY:	(800) 424-9300
CHEMICAL NAME AND SYNONYMS:	1-H Benzotriazole, Benzotriazole
TRADE NAMES AND SYNONYMS:	COBRATEC® 99 Powder
CHEMICAL FAMILY:	Triazole
FORMULA:	$C_6H_5N_3$
DOT SHIPPING DESCRIPTION:	Not Regulated (Benzotriazole)
PRODUCT NUMBER:	X18BT5585

NFPA BASED RATINGS: Health: 1, Flammability: 1, Reactivity: 0
HMIS RATINGS: Health: 2, Flammability: 0, Reactivity: 0, PPE: E
WHMIS CLASSIFICATION: D-2-(B)

SECTION II INGREDIENTS

Material	CAS No.	Wt. %	Exposure Limits
Benzotriazole	95-14-7	>99	None Established

SECTION III PHYSICAL DATA

BOILING POINT:	>350° C
FREEZING POINT:	94-99° C
SPECIFIC GRAVITY:	1.36 (solid)
VAPOR PRESSURE AT 20° C:	0.04 mm Hg
VAPOR DENSITY (air=1):	4.1 (calculated)
SOLUBILITY IN WATER % BY WT at 20° C:	2.0
% VOLATILES BY VOLUME:	None
EVAPORATION RATE (Butyl Acetate = 1):	Non-volatile
APPEARANCE AND ODOR:	Off white powder. Slight characteristic odor.

08/28/95

SECTION IV FIRE AND EXPLOSION HAZARD DATA

FLASH POINT:	340° F. (CC)
AUTOIGNITION TEMPERATURE:	Not Available
FLAMMABLE LIMITS IN AIR:	LOWER: Dust MEC. 0.03 oz/(cu. ft.) UPPER: Not Available

EXTINGUISHING MEDIA: Carbon Dioxide, Dry Chemical, Foam

SPECIAL FIRE FIGHTING PROCEDURES: Full protective equipment including self-contained breathing apparatus should be used. Water spray may be ineffective. If water is used, fog nozzles are preferable. Water may be used to cool closed containers to prevent pressure build-up and possible autoignition or explosion when exposed to extreme heat. During emergency conditions, overexposure to decomposition products may cause a health hazard. Symptoms may not be immediately apparent. Get medical attention.

UNUSUAL FIRE AND EXPLOSION HAZARDS: Airborne dust is rated a severe explosion hazard at a minimum concentration of 0.03 ounce per cubic feet (30 grams per cubic meter).

SECTION V HEALTH HAZARD DATA

OSHA AIR CONTAMINANTS: Due to its dusting nature during handling, exposure to dust must comply with OSHA's particulate not otherwise regulated limits for total and respirable dust.

EFFECTS OF OVEREXPOSURE: Contact with the eyes is likely to cause severe irritation. Detailed information about the effects of overexposure in the human being is unavailable. Experience thus far has not provided any example of obvious overexposure with resultant symptoms. Animal studies have indicated an effect on the central nervous system. An NCI bioassay showed no convincing evidence of carcinogenicity (NCI-CG-TR-88). Bacterial mutagenicity data exists. Experts consider the data inconclusive. (Environmental Mutagenesis, Vol. 7, Suppl. 5: 1-248 (1985) and references in RTECS #DM1225000).

EMERGENCY AND FIRST AID PROCEDURES: IF INHALED: If affected, remove from exposure. Restore breathing. Keep warm and quiet. IF ON SKIN: Wash affected area thoroughly with soap and water. IF IN EYES: Flush eyes with large amounts of water for 15 minutes. Get medical attention. IF SWALLOWED: Never give anything by mouth to an unconscious person. Give several glasses of water. If vomiting is not spontaneous, induce vomiting. Keep airway clear. Get medical attention.

TOXICITY DATA:

Oral LD_{50} (rat)	560 mg/Kg
Primary skin Irritation (rabbit)	Not a primary skin irritant
Dermal LD_{50}	>2000 mg/Kg
Eye irritation (rabbit)	caused severe eye irritation
Bluegill Sunfish (96 hr. Tlm)	28 mg/l
Minnow (96 hr. Tlm)	28 mg/l
Trout (96 hr. LC_{50})	39 mg/l
Algae (96 hr. EC_{50})	15.4 mg/l
Daphnia magna (48 hr. LC_{50})	141.6 mg/l

SECTION VI REACTIVITY DATA

STABILITY: Stable
INCOMPATIBILITY: Oxidizing Agents
HAZARDOUS DECOMPOSITION PRODUCTS: BY FIRE: Carbon Dioxide, Carbon Monoxide Nitrogen oxides, HCN in reducing atmospheres
HAZARDOUS POLYMERIZATION: Will Not occur

SECTION VII SPILL OR LEAK PROCEDURES

STEPS TO BE TAKEN IN CASE THE MATERIAL IS SPILLED OR RELEASED: If local high concentration of airborne dust occurs, dampen spill with water and ventilate to disperse dust laden air. Sweep up spill and reclaim or place in a covered waste disposal container.
WASTE DISPOSAL METHOD: Sanitary landfill or incinerate in approved facilities in accordance with local, state, and federal regulations. Do not heat or incinerate in closed containers.

SECTION VIII SPECIAL PROTECTIVE INFORMATION

RESPIRATORY PROTECTION: If personal exposure cannot be controlled below applicable exposure limits by ventilation, wear respiratory devices approved by NIOSH/MSHA for protection against organic vapors, dusts, and mists.

VENTILATION: Local exhaust recommended for dust control.
PROTECTIVE GLOVES: Recommended to avoid skin contact, Rubber, Vinyl
EYE PROTECTION: Use safety goggles where airborne dust is a problem.
OTHER PROTECTIVE EQUIPMENT: Safety shower, eye wash

SECTION IX SPECIAL PRECAUTIONS

PRECAUTIONS TO BE TAKEN IN HANDLING AND STORAGE: Store in a cool, dry area. Keep containers tightly closed when not in use. Avoid creating airborne dust concentrations which could constitute a potential dust explosion hazard. Avoid contact with skin, eyes, and clothing. Avoid inhalation of dust and vapor. DO NOT TAKE INTERNALLY. Clean up spills immediately.

SECTION X REGULATORY STATUS

Benzotriazole (CAS No. 95-14-7) is contained on the following chemical lists:

1. TSCA Section 8(a)/40CFR 712 Preliminary Assessment Information Rule
2. TSCA Section 8(d) Health and Safety Data Rule
3. NTP Testing Program
4. Massachusetts Substance List
5. Canadian Domestic Substance List
6. WHMIS Ingredient Disclosure List
7. TSCA Inventory List

PREPARED: August 28, 1995
SUPERSEDES: May 25, 1994

The information contained herein is based on the data available to us and is believed to be correct as of the date prepared; however, PMC SPECIALTIES GROUP, INC. makes no warranty, expressed or implied regarding the accuracy of these data or the results to be obtained from the use thereof.

Appendix C

AERATION MANIFOLD FOR PLASMA CUTTING ALUMINUM

In this section:

Aeration Manifold for Plasma Cutting Aluminum c-2
Introduction.....c-2
Making an Aeration Manifold.....c-2

Aeration Manifold for Plasma Cutting Aluminum

Introduction

When plasma arc cutting aluminum, free hydrogen gas may be generated by the cutting process. The high temperature of the plasma process causes disassociation of oxygen and hydrogen from the water in the water table. The hot aluminum, which has a high affinity for oxygen, then combines with the oxygen leaving free hydrogen.

An effective means of avoiding free hydrogen buildup is to install an aeration manifold on the floor of the water table to replenish the oxygen content of the water.

Making an Aeration Manifold – Figure c-1

Make an **Aeration Manifold** with two-inch (50 mm) PVC tubing with one-inch (25 mm) **Distribution Lines** connected to it. Drill 1/8 inch (3 mm) holes every six inches (150 mm) in the distribution lines. Cap the ends of the distribution lines and install the lines so that oxygen is delivered to all parts of the cutting area.

Connect the manifold to a shop air line. Set a pressure regulator to obtain a steady stream of bubbles.

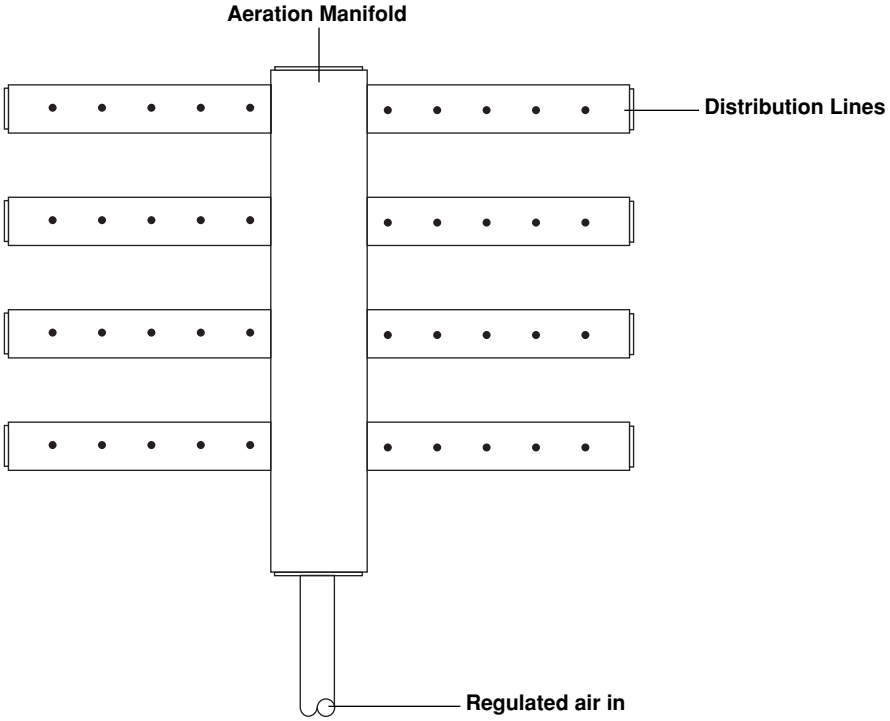

Figure c-1 Aeration Manifold

Appendix D

AIR FILTERS

Air Filters

Gas purity is critical for maximizing consumable parts life, as well as for producing the highest quality cutting which Hypertherm plasma equipment can achieve. Plasma air must be clean, dry and oil-free, and air must be delivered at the pressure and flow rate specified for each plasma system. If the air supply contains moisture, oil or dirt particles, cut quality will be lowered and consumable parts life will be shortened, which increase production costs.

To optimize both consumables life and cut quality, Hypertherm recommends a three-stage filtering process for compressor air for removing contaminants from the air supply.

1. The first stage of filtering should remove at least 99% of all particles and liquids 5 microns and larger in size.

2. The second stage should be a coalescing-type filter to remove oil. This filter should remove 99.99% of particles 0.025 micron and larger in size.

3. The third and final stage of filtration should be an activated carbon adsorbent filter that removes 99.999% of oil or hydrocarbons that have not been trapped by the previous stages.

Appendix E

ELECTROMAGNETIC COMPATIBILITY (EMC)

In this section:

General e-2
Power Cable e-2
Connect Power Cable e-2
Power Supply e-2
Line Disconnect Switch e-4
EMI Filter Parts List e-5

General

This appendix will enable a qualified electrician to install the power cable to the EMI filter on all CE 220/380/415 volt power supplies (073198, 073199).

Power Cable

The power cable is **customer supplied**. See *Power Cable* on pages 3-5 and 3-6 for recommended cable sizes. Final specification and installation of the power cord should be made by a licensed electrician and according to applicable national or local codes. See also *Mains Supply* on page e-2 for further power (supply) cable shielding recommendations.

Connect Power Cable

Connect one end of the power cable to the EMI filter first and then connect the other end to the line disconnect switch.

Power Supply

1. Locate the EMI filter on the top rear of the power supply (see Figure e-1).

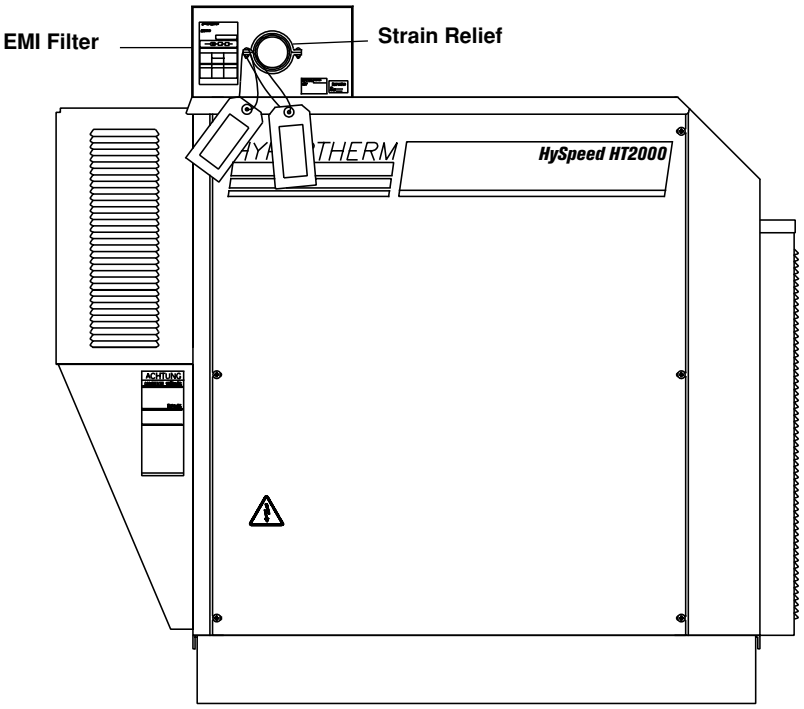

Figure e-1 Power Supply with EMI Filter – Side View

2. Unscrew the four filter cover screws and remove cover to access input voltage connections at TB1 (see Figure e-2).

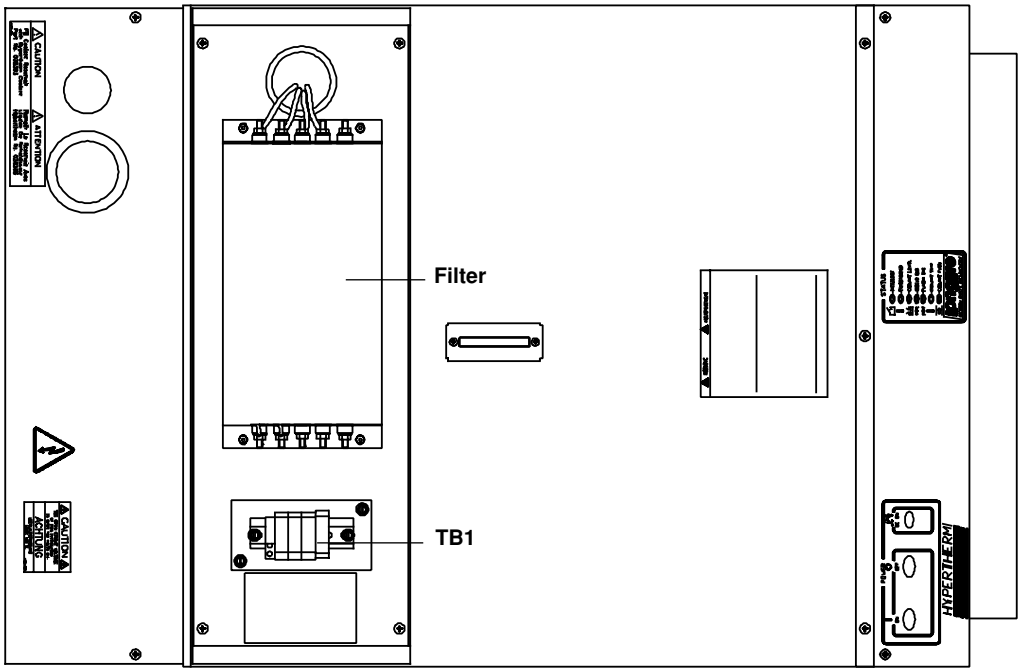

Figure e-2 Power Supply with EMI Filter Cover Off – Top View

3. Insert the power cable through the strain relief (see Figure e-1).

4. Connect leads L1 to U, L2 to V, and L3 to W terminals of TB1 (see Figure e-3). Ensure that all connections are tight to avoid excessive heating.

5. Connect the ground lead to terminal marked PE at TB1 (see Figure e-3).

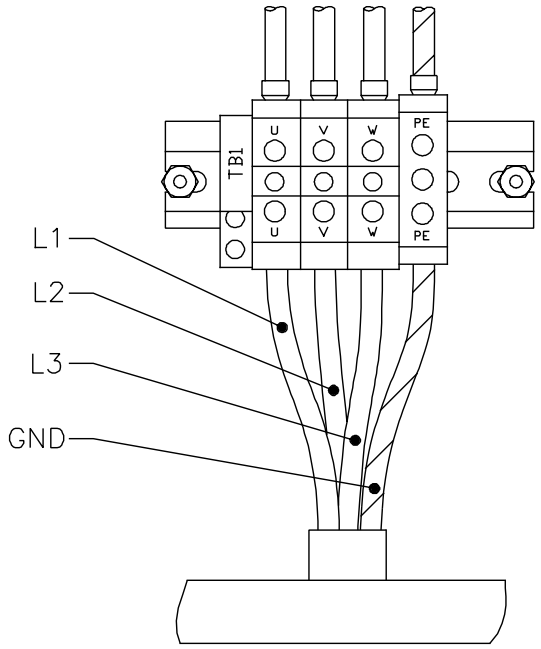

Figure e-3 Power Cable Connections to TB1

WARNING

Tthere is line voltage at the filter even if the ON (1) pushbutton on the HT2000 power supply has not been pressed. As a common safety practice, ALWAYS verify that the line disconnect switch is in the OFF position before installing, disconnecting or servicing in this area.

Line Disconnect Switch

Connecting the power cable to the line disconnect switch must conform to national or local electrical codes. This work should be performed only by qualified, licensed personnel. See *Power Requirements* and *Line Disconnect Switch* on page 3-5.

EMI Filter Parts List

Item	Number	Description	Qty.
	001557	Cover:Hyspeed HT2000-CE Electronic Filter Enclosure	1
1	001558	Enclosure:Hyspeed HT2000-CE Electronic Filter	1
2	001559	Cover:Hyspeed HT2000-CE Top	1
3	008489	Bushing:1.97 ID X 2.5 Hole Black-Snap	1
4	008610	Strain Relief:1-1/2NPT 1.5ID 2-Screw	1
5	029316	TB1 Input-Power SA:200/2000/4X00/HD	1
6	109036	Filter:60A 440VAC 3PH 2-Stage Electronic	1
7	109040	Filter Mounting Bracket for 109036	1

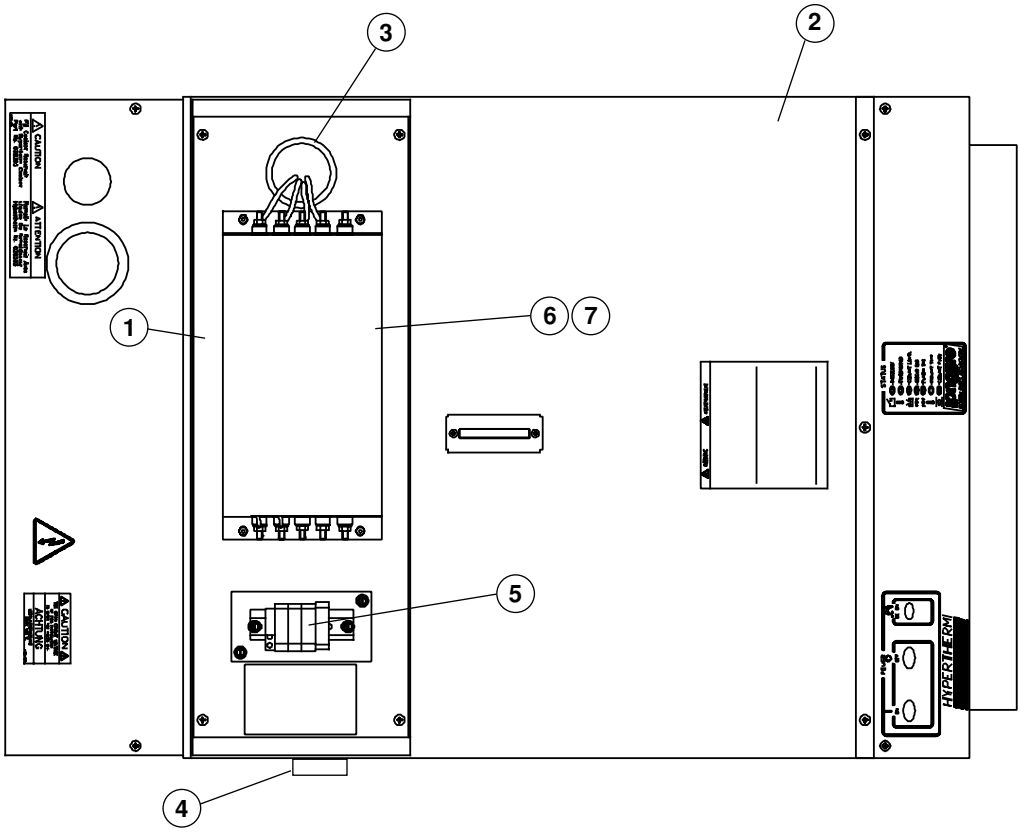

Figure e-4 EMI Filter Parts

Appendix F

SYSTEM GROUNDING

System Grounding Requirements

The plasma system must be grounded for safety reasons and to suppress EMI:

- *Safety* The entire system – power supply, accessory enclosures, and worktable – must be grounded to protect it and the operator from a ground fault. The protective earth (PE) ground connections must be installed by a licensed electrician and conform to national and local codes.

- *EMI Suppression* If allowed by national and local codes, the ground system can also be used to suppress EMI (electromagnetic interference). Below is a guide to configure the plasma system for minimal EMI. See Electromagnetic Compatibility in this manual for additional information.

Suggested Ground Cable Routing

Power Supply

Connect the power supply to the PE ground terminal, using a properly sized color-coded conductor. This PE ground is connected to the service ground through the line disconnect switch. See the Installation section for further information on the power cord and the line disconnect switch.

Equipment Grounding

All accessory modules that receive power from the plasma power supply must also use the power supply's ground – either by connection to the PE terminal of the power supply, or by direct connection to the equipment ground conductor. Each module should have only one connection to ground to avoid ground loops. If any enclosure is grounded to the work table, the work table must be grounded to the power supply.

Effective grounding for EMI reduction is highly dependent upon the installation configuration. Two acceptable configurations are shown in Figures f-1 and f-2.

The RHF console should be installed near the work table, and grounded directly to it. Other modules should be installed near the power supply, and grounded directly to it (Figure f-1).

All modules may also be installed near the work table, and grounded directly to it (Figure f-2). Do not ground the RHF console directly to the power supply.

The customer must furnish all conductors for equipment grounding. Grounding conductors may be purchased through Hypertherm in any length specified by the customer (Part No. 047058). The conductor may also be

purchased locally, using a minimum 8 AWG UL Type MTW cable (USA specification) or the appropriate cable specified by national and local codes.

Consult the appropriate manufacturer's instructions to ground equipment that does not receive power from the power supply.

Work Table Grounding

If a supplementary ground rod is installed near the worktable to reduce EMI, it must be connected directly to the PE ground of the building structure, connected to the service ground; or to earth, providing the resistance between the ground rod and the service ground meets national or local codes. Place the supplementary ground rod within 20 ft (6 m) of the worktable according to national or local codes.

If any module is grounded to the work table, the work table must be grounded to the power supply, or the configuration must be changed to comply with applicable national and local electrical codes.

A ferrite choke can be placed in the conductor between the work table ground rod and the PE ground, with a number of turns through the choke to isolate the safety ground (at 60 Hz) from any electromagnetic interference (frequencies above 150 Khz). The more turns the better. A suitable ferrite choke can be made by wrapping 10 turns or more of the ground lead through Magnetics part number 77109-A7, Fair-Rite part number 59-77011101, or other equivalent ferrite choke. Locate the choke as close as possible to the plasma power supply.

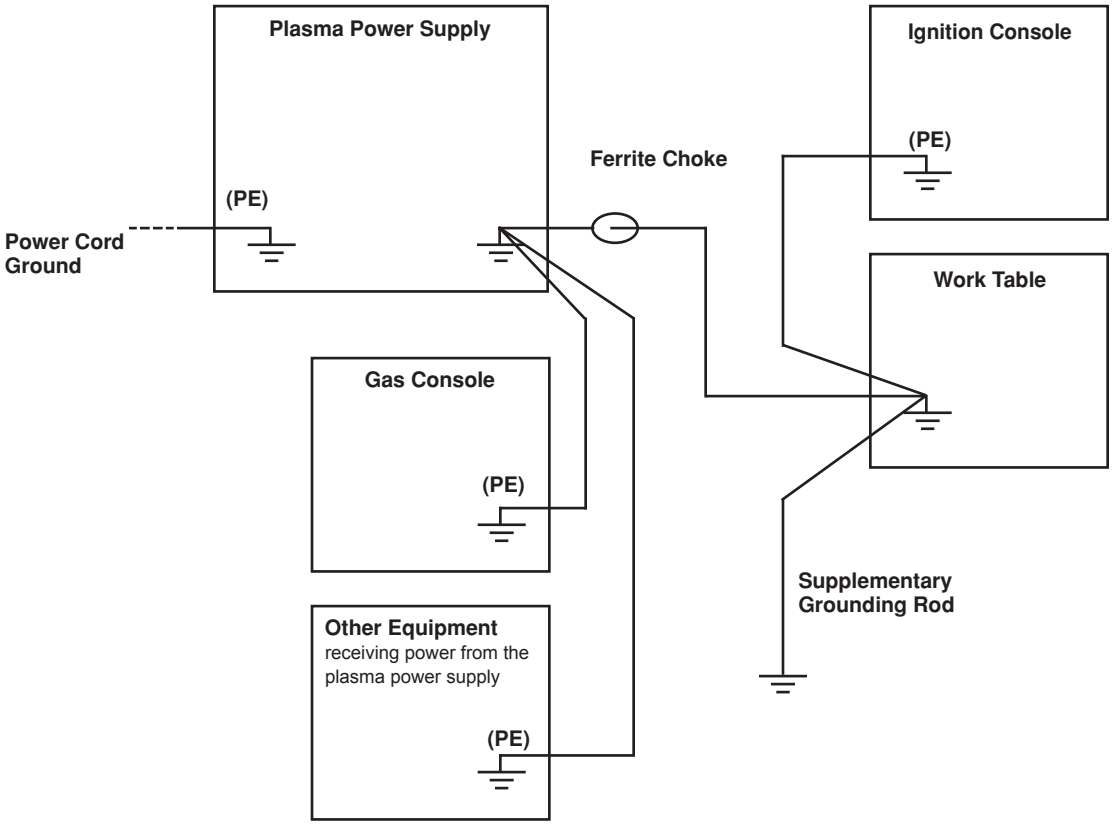

Figure f-1 Recommended Ground Connection Configuration

Note: Configuration may vary for each installation and may require a different ground scheme.

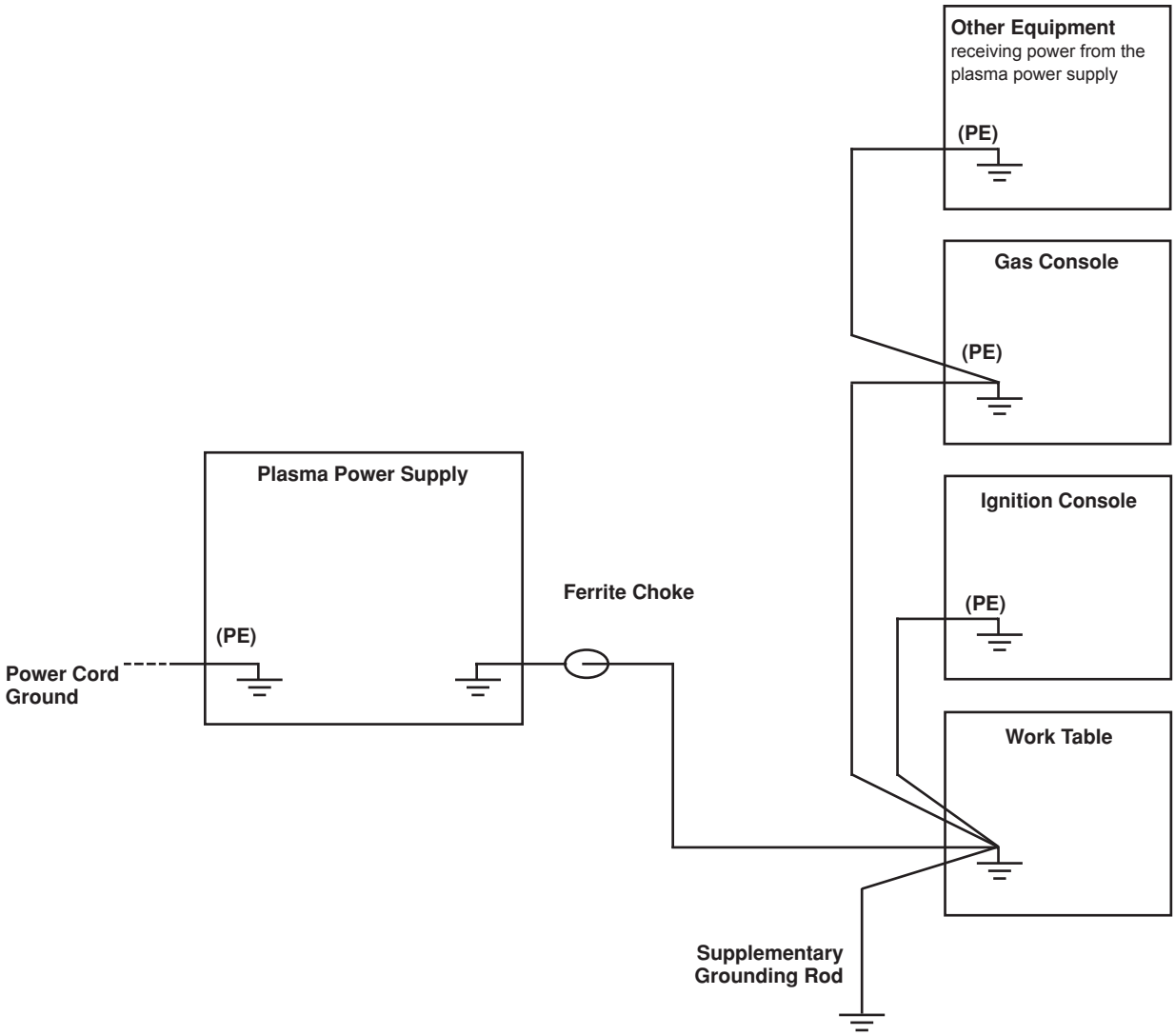

Figure f-2 Alternate Ground Connection Configuration

The preferred cable routing for this configuration is as shown, but it is acceptable to “daisy-chain” the grounds for the gas console and other equipment to the ignition console. The ignition console should NOT be daisy-chained through the other components to the work table.