powermax900®

Plasma Arc Cutting System

Operator Manual
803080 Revision 2

CE

EN50199
EN50192

powermax900

Plasma Arc Cutting System

Operator Manual
IM-308
(P/N 803080)

Revision 2 November, 2013

beginning with serial number
900-010000

Hypertherm, Inc.
Hanover, NH USA
http://www.hypertherm.com
email:info@hypertherm.com

© Copyright 2013 Hypertherm, Inc.
All Rights Reserved

HYPERTHERM and POWERMAX are trademarks of Hypertherm, Inc. and may be registered in the United States and/or other countries.

Hypertherm Offices Worldwide:

Hypertherm, Inc.
Etna Road, P.O. Box 5010
Hanover, NH 03755 USA
Tel.: (603) 643-3441 (Main Office)
Fax: (603) 643-5352 (All Departments)
Tel.: (800) 643-9878 (Technical Service)
Tel.: (800) 737-2978 (Customer Service)
email: info@hypertherm.com (General Information)
email: service@hypertherm.com (Technical/Customer Services)

Hypertherm Plasmatechnik GmbH
Technologiepark Hanau
Rodenbacher Chaussee 6
D–63457 Hanau-Wolfgang, Germany
Tel.: 49 6181 58 2100
Fax: 49 6181 58 2134

European Technical Support Organization (ETSO)
Technologiepark Hanau
Rodenbacher Chaussee 6
D–63457 Hanau-Wolfgang, Germany
Tel.: 49 6181 58 2100
Fax: 49 6181 58 2134

Hypertherm Singapore Pte Ltd
No. 19 Kaki Bukit Road 2
K.B. Warehouse Complex
Singapore 417847, Republic of Singapore
Tel.: 65 841 2489
Fax: 65 841 2490

Hypertherm U.K.
9 Berkeley Court • Manor Park
Runcorn, Cheshire, England WA7 1TQ
Tel.: 44 1928 579 074
Fax: 44 1928 579 604

France
10, Allée de l'Isara
F-95000 Cergy-Pontoise, France
Tel.: 33 1 34 24 03 05
Fax: 33 1 34 25 09 64

Italy
Via Torino 2
20123 Milan, Italy
Tel.: 39 02 725 46 312
Fax: 39 02 725 46 400

The Netherlands
Burg, Haverkampstraat 13
7091 CN Dinxperlo, Holland
Tel.: 31 315 655866
Fax: 31 315 655886

EMC INTRODUCTION

Hypertherm's CE-marked equipment is built in compliance with standard EN50199. The equipment should be installed and used in accordance with the information below to achieve electromagnetic compatibility.

The limits required by EN50199 may not be adequate to completely eliminate interference when the affected equipment is in close proximity or has a high degree of sensitivity. In such cases it may be necessary to use other measures to further reduce interference.

This plasma is designed for use only in an industrial environment.

INSTALLATION AND USE

The user is responsible for installing and using the plasma equipment according to the manufacturer's instructions. If electromagnetic disturbances are detected then it shall be the responsibility of the user to resolve the situation with the technical assistance of the manufacturer. In some cases this remedial action may be as simple as earthing the cutting circuit, see *Earthing of Workpiece*. In other cases it could involve constructing an electromagnetic screen enclosing the power source and the work complete with associated input filters. In all cases electromagnetic disturbances must be reduced to the point where they are no longer troublesome.

ASSESSMENT OF AREA

Before installing the equipment the user shall make an assessment of potential electromagnetic problems in the surrounding area. The following shall be taken into account:

a. Other supply cables, control cables, signalling and telephone cables; above, below and adjacent to the cutting equipment.
b. Radio and television transmitters and receivers.
c. Computer and other control equipment.
d. Safety critical equipment, for example guarding of industrial equipment.
e. Health of the people around, for example the use of pacemakers and hearing aids.
f. Equipment used for calibration or measurement.
g. Immunity of other equipment in the environment. User shall ensure that other equipment being used in the environment is compatible. This may require additional protection measures.
h. Time of day that cutting or other activities are to be carried out.

The size of the surrounding area to be considered will depend on the structure of the building and other activities that are taking place. The surrounding area may extend beyond the boundaries of the premises.

METHODS OF REDUCING EMISSIONS

Mains Supply

Cutting equipment must be connected to the mains supply according to the manufacturer's recommendations. If interference occurs, it may be necessary to take additional precautions such as filtering of the mains supply. Consideration should be given to shielding the supply cable of permanently installed cutting equipment, in metallic conduit or equivalent. Shielding should be electrically continuous throughout its length. The shielding should be connected to the cutting mains supply so that good electrical contact is maintained between the conduit and the cutting power source enclosure.

Maintenance of Cutting Equipment

The cutting equipment must be routinely maintained according to the manufacturer's recommendations. All access and service doors and covers should be closed and properly fastened when the cutting equipment is in operation. The cutting equipment should not be modified in any way except for those changes and adjustments covered in the manufacturer's instructions. In particular, the spark gaps of arc striking and stabilizing devices should be adjusted and maintained according to the manufacturer's recommendations.

Cutting Cables

The cutting cables should be kept as short as possible and should be positioned close together, running at or close to the floor level.

Equipotential Bonding

Bonding of all metallic components in the cutting installation and adjacent to it should be considered. However, metallic components bonded to the workpiece will increase the risk that the operator could receive a shock by touching these metallic components and the electrode at the same time. The operator should be insulated from all such bonded metallic components.

Earthing of Workpiece

Where the workpiece is not bonded to earth for electrical safety, nor connected to earth because of its size and position, for example, ship's hull or building steelwork, a connection bonding the workpiece to earth may reduce emissions in some, but not all instances. Care should be taken to prevent the earthing of the workpiece increasing the risk of injury to users, or damage to other electrical equipment. Where necessary, the connection of the workpiece to earth should be made by a direct connection to the workpiece, but in some countries where direct connection is not permitted, the bonding should be achieved by suitable capacitances selected according to national regulations.

Note: The cutting circuit may or may not be earthed for safety reasons. Changing the earthing arrangements should only be authorized by a person who is competent to assess whether the changes will increase the risk of injury, for example, by allowing parallel cutting current return paths which may damage the earth circuits of other equipment. Further guidance is given in IEC TC26 (sec)94 and IEC TC26/108A/CD Arc Welding Equipment Installation and Use.

Screening and Shielding

Selective screening and shielding of other cables and equipment in the surrounding area may alleviate problems of interference. Screening of the entire plasma cutting installation may be considered for special applications.

WARNING

Genuine Hypertherm parts are the factory-recommended replacement parts for your Hypertherm system. Any damage caused by the use of other than genuine Hypertherm parts may not be covered by the Hypertherm warranty.

GENERAL

HYPERTHERM, Inc. warrants that Products shall be free from defects in materials and workmanship, under proper and normal use for which such Equipment is recommended, for a period of two (2) years, except only with respect to the Torch, for which the warranty period shall be one (1) year, from the date of its delivery to you.

HYPERTHERM, at its sole option, shall repair, replace, or adjust, free of charge, any Products covered by this warranty which shall be returned with HYPERTHERM's prior authorization (which shall not be unreasonably withheld), properly packed, to HYPERTHERM's place of business in Hanover, New Hampshire, all costs, insurance and freight prepaid, and which examination proves not to be free from defects in materials and workmanship. HYPERTHERM shall not be liable for any repairs, replacements, or adjustments of Products covered by this warranty, except those made pursuant to this paragraph or with HYPERTHERM's written consent. This warranty shall not apply to any Product which has been mishandled, incorrectly installed, modified or assembled by you or any other person. HYPERTHERM shall be liable for breach of this warranty only if it receives written notice of such breach within the applicable warranty period specified herein above. THE FOREGOING SHALL CONSTITUTE THE SOLE REMEDY TO DISTRIBUTORS OR THEIR CUSTOMERS FOR ANY BREACH BY HYPERTHERM OF ITS WARRANTY.

PATENT INDEMNITY

Except only in cases of Products not manufactured by HYPERTHERM or manufactured by a person other than HYPERTHERM not in strict conformity with HYPERTHERM's specifications, and in cases of designs, processes, formulae or combinations not developed or purported to be developed by HYPERTHERM, HYPERTHERM agrees to indemnify, protect and hold harmless Distributors and their customers against any and all liability or claims in any manner imposed upon or accruing against Distributors and their customers because of the use in or about the construction or operation of Equipment or any design, system, formula, combination, article or material which infringes or alleges to infringe on any patent or other right. Distributors shall notify HYPERTHERM promptly upon learning of any action or threatened action in connection with any such alleged infringement, and each party may appoint its own counsel for any such action or threatened action.

DISCLAIMER OF OTHER WARRANTIES

HYPERTHERM MAKES NO WARRANTIES REGARDING PRODUCTS MANUFACTURED BY IT OR OTHERS (INCLUDING WITHOUT IMPLIED LIMITATION WARRANTIES AS TO MERCHANTABILITY OR FITNESS FOR A PARTICULAR PURPOSE), EITHER EXPRESS OR IMPLIED, EXCEPT AS PROVIDED HEREIN. This warranty is in lieu of any and all warranties, express or implied, by law or otherwise; and Distributors are not authorized to give any other warranty purporting to be binding upon HYPERTHERM upon resale of Products to their customers. IN NO EVENT shall HYPER-THERM be liable for incidental or consequential damages or injury to the person or property of anyone by reason of any defect in any Equipment sold hereunder.

NATIONAL AND LOCAL CODES

National and local codes governing plumbing and electrical installation shall take precedent over any instructions contained in this manual. IN NO EVENT shall Hypertherm be liable for incidental or consequential injury to persons or property damage by reason of any code violation or poor work practices.

CONTENTS

ELECTROMAGNETIC COMPATIBILITY i
WARRANTY ii

SECTION 1 SAFETY 1-1
RECOGNIZE SAFETY INFORMATION 1-2
FOLLOW SAFETY INSTRUCTIONS 1-2
CUTTING CAN CAUSE FIRE OR EXPLOSION 1-2
ELECTRIC SHOCK CAN KILL 1-2
CUTTING CAN PRODUCE TOXIC FUMES 1-3
ARC RAYS CAN BURN EYES AND SKIN 1-4
COMPRESSED GAS EQUIPMENT SAFETY 1-4
ADDITIONAL SAFETY INFORMATION 1-4
NOISE CAN DAMAGE HEARING 1-4
GAS CYLINDERS CAN EXPLODE IF DAMAGED 1-4
GROUNDING SAFETY 1-5
PLASMA ARC CAN CAUSE INJURY AND BURNS 1-5
PACEMAKER AND HEARING AID OPERATION 1-5

SECTION 1a SÉCURITÉ 1a-1
IDENTIFIER LES CONSIGNES DE SÉCURITÉ 1a-2
SUIVRE LES INSTRUCTIONS DE SÉCURITÉ 1a-2
LE COUPAGE PEUT PROVOQUER UN INCENDIE OU UNE EXPLOSION 1a-2
DANGER AVERTISSEMENT PRÉCAUTION 1a-2
LE COUPAGE PEUT PRODUIRE DES VAPEURS TOXIQUES 1a-3
LES CHOCS ÉLECTRIQUES PEUVENT être fatals 1a-3
L'ARC PLASMA PEUT PROVOQUER DES BLESSURES OU DES BRÛLURES 1a-4
MISE À LA MASSE ET À LA TERRE 1a-4
LES RAYONS DE L'ARC PEUVENT BRÛLER LES YEUX ET LA PEAU 1a-4
SÉCURITÉ DES BOUTEILLES DE GAZ COMPRIMÉ 1a-5
LE BRUIT PEUT PROVOQUER DES PROBLÈMES AUDITIFS 1a-5
PACEMAKERS ET PROTHÈSES AUDITIVES 1a-5
LES BOUTEILLES DE GAZ COMPRIMÉ PEUVENT EXPLOSER EN CAS DE DOMMAGES 1a-5

SECTION 2 SPECIFICATIONS 2-1
INTRODUCTION 2-2
SPECIFICATIONS 2-3
Power Supply 2-3
PAC125 TORCHES 2-4
PAC125T Hand Torch Assembly 2-4
PAC125M Machine Torch Assembly 2-4
IEC SYMBOLS USED 2-6

SECTION 3 SETUP 3-1
UPON RECEIPT 3-2
CLAIMS 3-2
HOISTING REQUIREMENTS 3-3

VOLTAGE CONFIGURATIONS 3-4
POWER CORD PLUGS 3-6
POWER CORDS 3-6
208/240/480/600V Power Supplies 3-6
200/230/400V Power Supplies 3-6
SINGLE-PHASE AND THREE-PHASE POWER CONFIGURATIONS 3-7
Single-Phase 3-7
Three-Phase - Non-CE 3-7
Three-Phase - CE 3-8
POWER REQUIREMENTS 3-8
Line Voltage Disconnect Box 3-8
GROUNDING REQUIREMENTS 3-9
WORK CABLE AND CLAMP 3-9
GAS SUPPLY REQUIREMENTS 3-10
Air Supply Quality 3-10
Additional Air Filtration 3-10
Nitrogen Quality 3-10
GAS SUPPLY CONNECTION 3-11
TORCH LEAD CONNECTION 3-11
PAC125M ON/OFF Pendant Connection 3-12
PAC125M Torch ON/OFF Switch Connection Data 3-12
PAC125M Torch Alignment 3-12
MACHINE INTERFACE WITH PAC125M 3-13
Arc Voltage 3-14

SECTION 4 OPERATION 4-1
CONTROLS AND INDICATORS 4-2
OPERATING INSTRUCTIONS 4-3
Pilot Arc Controller Option 4-4
PAC125T Safety Trigger Operation 4-5
OPERATING TIPS 4-6
Changing Consumable Parts 4-6
Cutting 4-8
Piercing 4-10
Gouging 4-11
CUT CHART - 55A STANDARD CONSUMABLES 4-12
CUT CHART - 35A CONSUMABLES 4-13
COMMON CUTTING FAULTS 4-14

SECTION 5 MAINTENANCE/PARTS 5-1
INTRODUCTION 5-2
ROUTINE MAINTENANCE 5-2
Bowl Draining and Filter Element Cleaning 5-2
Removal, Cleaning and Replacement of the Cooling Air Filter 5-3
BASIC TROUBLESHOOTING 5-4
TECHNICAL QUESTIONS 5-7
PARTS 5-8

Consumable Parts Kits 5-8
Consumable Parts Kit - CE (128289) 5-8
Consumable Configurations 5-9
PAC125T Torch Assembly and 25 ft (7.6 m) Lead - 083066 5-10
PAC125T Torch Assembly and 50 ft (15.2 m) Lead - 083067 5-10
PAC125M Torch Assembly and 14 ft (4.3 m) Lead - 083069 w/pigtail, 083073 no pigtail 5-11
PAC125M Torch Assembly and 25 ft (7.6 m) Lead - 083068 w/pigtail, 083072 no pigtail 5-11
PAC125M Torch Assembly and 35 ft (10.6 m) Lead - 083070 w/pigtail, 083074 no pigtail 5-11
PAC125M Torch Assembly and 50 ft (15.2 m) Lead - 083071 w/pigtail, 083075 no pigtail 5-11
Powermax900 Field Upgrade Kits and Optional Parts 5-12
POWER SUPPLIES - 208/240/480V, 1F/3F, 60 HZ 5-12
POWER SUPPLIES - 200/230/400V, 1F/3F, 50/60 HZ 5-12
POWER SUPPLIES - 400V CE, 3F, 50 HZ 5-13

CHANGING FUSES a-1

STANDARDS INDEX a-2

AERATION MANIFOLD a-3

ILLUSTRATIONS

Figure 2-1 Powermax900 Hand Plasma Cutting System 2-2
Figure 2-2 Powermax900 Power Supply with Dimensions 2-3
Figure 2-3 PAC125T Torch with Dimensions 2-4
Figure 2-4 PAC125M Torch with Dimensions 2-4

Figure 3-1 Powermax900 Power Supply Hoisting Setup 3-3
Figure 3-2 Rear Panel 3-4
Figure 3-3 200V or 208V Configuration 3-5
Figure 3-4 230V or 240V Configuration 3-5
Figure 3-5 400V or 480V Configuration 3-5
Figure 3-6 Power Cord Preparation 3-6
Figure 3-6a Power Cord Preparation - CE 3-6
Figure 3-7 Single-Phase Power 3-7
Figure 3-8 Three-Phase Power - Non-CE 3-7
Figure 3-9 Three-Phase CE Power 3-8
Figure 3-10 Proper Work Clamp Connection 3-9
Figure 3-11 Recommended Three-Stage Air Filtration System 3-10
Figure 3-12 Rear Panel, Gas Supply Connection to Filter 3-11
Figure 3-13 ON/OFF Pendant Connection 3-12
Figure 3-14 Aligning the Machine Torch with Square 3-13
Figure 3-15 Machine Interface Cable and Signals 3-13
Figure 3-16 Feeding Arc Voltage Cable to Machine Interface Board 3-14
Figure 3-17 Machine Interface Board Connections for Arc Voltage 3-14

Figure 4-1 Powermax900 Controls and Indicators 4-2
Figure 4-2 Powermax900 Operating Indicators and Adjustments 4-3
Figure 4-3 Proper Work Clamp Connection 4-4
Figure 4-4 PAC125T Torch Safety Trigger Operation 4-5
Figure 4-5 Consumables 4-7
Figure 4-6 Starting a Cut 4-8
Figure 4-7 Cutting a Circle 4-9
Figure 4-8 Dragging the Torch 4-9
Figure 4-9 Piercing 4-10
Figure 4-10 Gouging 4-11

Figure 5-1 Filter Assembly 5-2
Figure 5-2 Air Filter Removal 5-3
Figure 5-3 Shielded Consumable Configurations 5-8
Figure 5-4 Unshielded Consumable Configurations 5-8
Figure 5-5 PAC125T Torch Assembly and Leads 5-9
Figure 5-6 PAC125M Torch Assembly and Leads 5-10

Figure a-1 F1 and F2 Fuse Location a-1
Figure c-1 Aeration Manifold c-1

Section 1

SAFETY

In this section:

Recognize Safety Information 1-2
Follow Safety Instructions 1-2
Cutting Can Cause Fire or Explosion 1-2
Electric Shock Can Kill 1-3
Cutting Can Produce Toxic Fumes 1-3
Plasma Arc Can Cause Injury and Burns 1-4
Arc Rays Can Burn Eyes and Skin 1-4
Grounding Safety 1-4
Compressed Gas Equipment Safety 1-5
Gas Cylinders Can Explode if Damaged 1-5
Noise Can Damage Hearing 1-5
Pacemaker and Hearing Aid Operation 1-5
Additional Safety Information 1-5

RECOGNIZE SAFETY INFORMATION

The symbols shown in this section are used to identify potential hazards. When you see a safety symbol in this manual or on your machine, understand the potential for personal injury, and follow the related instructions to avoid the hazard.

FOLLOW SAFETY INSTRUCTIONS

Read carefully all safety messages in this manual and safety labels on your machine.

- Keep the safety labels on your machine in good condition. Replace missing or damaged labels immediately.
- Learn how to operate the machine and how to use the controls properly. Do not let anyone operate it without instruction.
- Keep your machine in proper working condition. Unauthorized modifications to the machine may affect safety and machine service life.

DANGER WARNING CAUTION

A signal word DANGER or WARNING is used with a safety symbol. DANGER identifies the most serious hazards.

- DANGER and WARNING safety labels are located on your machine near specific hazards.
- WARNING safety messages precede related instructions in this manual that may result in injury or death if not followed correctly.
- CAUTION safety messages precede related instructions in this manual that may result in damage to equipment if not followed correctly.

CUTTING CAN CAUSE FIRE OR EXPLOSION

Fire Prevention

- Be sure the area is safe before doing any cutting. Keep a fire extinguisher nearby.
- Remove all flammables within 35 feet (10 m) of the cutting area.
- Quench hot metal or allow it to cool before handling or before letting it touch combustible materials.
- Never cut containers with potentially flammable materials inside – they must be emptied and properly cleaned first.
- Ventilate potentially flammable atmospheres before cutting.
- When cutting with oxygen as the plasma gas, an exhaust ventilation system is required.

Explosion Prevention

- Do not use the plasma system if explosive dust or vapors may be present.
- Do not cut pressurized cylinders, pipes, or any closed container.
- Do not cut containers that have held combustible materials.

WARNING

Explosion Hazard
Argon-Hydrogen and Methane

Hydrogen and methane are flammable gases that present an explosion hazard. Keep flames away from cylinders and hoses that contain methane or hydrogen mixtures. Keep flames and sparks away from the torch when using methane or argon-hydrogen plasma.

WARNING

Hydrogen Detonation with Aluminum Cutting

- When cutting aluminum underwater, or with the water touching the underside of the aluminum, free hydrogen gas may collect under the workpiece and detonate during plasma cutting operations.
- Install an aeration manifold on the floor of the water table to eliminate the possibility of hydrogen detonation. Refer to the Appendix section of this manual for aeration manifold details.

ELECTRIC SHOCK CAN KILL

Touching live electrical parts can cause a fatal shock or severe burn.

- Operating the plasma system completes an electrical circuit between the torch and the workpiece. The workpiece and anything touching the workpiece are part of the electrical circuit.
- Never touch the torch body, workpiece or the water in a water table when the plasma system is operating.

Electric Shock Prevention

All Hypertherm plasma systems use high voltage in the cutting process (200 to 400 VDC are common). Take the following precautions when operating this system:

- Wear insulated gloves and boots, and keep your body and clothing dry.
- Do not stand, sit or lie on – or touch – any wet surface when using the plasma system.
- Insulate yourself from work and ground using dry insulating mats or covers big enough to prevent any physical contact with the work or ground. If you must work in or near a damp area, use extreme caution.
- Provide a disconnect switch close to the power supply with properly sized fuses. This switch allows the operator to turn off the power supply quickly in an emergency situation.
- When using a water table, be sure that it is correctly connected to earth ground.
- Install and ground this equipment according to the instruction manual and in accordance with national and local codes.
- Inspect the input power cord frequently for damage or cracking of the cover. Replace a damaged power cord immediately. **Bare wiring can kill**.
- Inspect and replace any worn or damaged torch leads.
- Do not pick up the workpiece, including the waste cutoff, while you cut. Leave the workpiece in place or on the workbench with the work cable attached during the cutting process.
- Before checking, cleaning or changing torch parts, disconnect the main power or unplug the power supply.
- Never bypass or shortcut the safety interlocks.
- Before removing any power supply or system enclosure cover, disconnect electrical input power. Wait 5 minutes after disconnecting the main power to allow capacitors to discharge.
- Never operate the plasma system unless the power supply covers are in place. Exposed power supply connections present a severe electrical hazard.
- When making input connections, attach proper grounding conductor first.
- Each Hypertherm plasma system is designed to be used only with specific Hypertherm torches. Do not substitute other torches which could overheat and present a safety hazard.

CUTTING CAN PRODUCE TOXIC FUMES

Cutting can produce toxic fumes and gases that deplete oxygen and cause injury or death.

- Keep the cutting area well ventilated or use an approved air-supplied respirator.
- Do not cut in locations near degreasing, cleaning or spraying operations. The vapors from certain chlorinated solvents decompose to form phosgene gas when exposed to ultraviolet radiation.
- Do not cut metal coated or containing toxic materials, such as zinc (galvanized), lead, cadmium or beryllium, unless the area is well ventilated and the operator wears an air-supplied respirator. The coatings and any metals containing these elements can produce toxic fumes when cut.
- Never cut containers with potentially toxic materials inside – they must be emptied and properly cleaned first.
- This product, when used for welding or cutting, produces fumes or gases which contain chemicals known to the State of California to cause birth defects and, in some cases, cancer.

PLASMA ARC CAN CAUSE INJURY AND BURNS

Instant-On Torches
Plasma arc comes on immediately when the torch switch is activated.

The plasma arc will cut quickly through gloves and skin.

- Keep away from the torch tip.
- Do not hold metal near the cutting path.
- Never point the torch toward yourself or others.

ARC RAYS CAN BURN EYES AND SKIN

Eye Protection Plasma arc rays produce intense visible and invisible (ultraviolet and infrared) rays that can burn eyes and skin.

- Use eye protection in accordance with applicable national or local codes.
- Wear eye protection (safety glasses or goggles with side shields, or a welding helmet) with appropriate lens shading to protect your eyes from the arc's ultraviolet and infrared rays.

Arc Current	Lens Shade AWS (USA)	Lens Shade ISO 4850
Up to 100 A	No. 8	No. 11
100-200 A	No. 10	No. 11-12
200-400 A	No. 12	No. 13
Over 400 A	No. 14	No. 14

Skin Protection Wear protective clothing to protect against burns caused by ultraviolet light, sparks and hot metal.

- Gauntlet gloves, safety shoes and hat.
- Flame-retardant clothing to cover all exposed areas.
- Cuffless trousers to prevent entry of sparks and slag.
- Remove any combustibles, such as a butane lighter or matches, from your pockets before cutting.

Cutting Area Prepare the cutting area to reduce reflection and transmission of ultraviolet light:

- Paint walls and other surfaces with dark colors to reduce reflection.
- Use protective screens or barriers to protect others from flash and glare.
- Warn others not to watch the arc. Use placards or signs.

GROUNDING SAFETY

Work Cable Attach the work cable securely to the workpiece or the work table with good metal-to-metal contact. Do not connect it to the piece that will fall away when the cut is complete.

Work Table Connect the work table to an earth ground, in accordance with appropriate national or local electrical codes.

Input Power

- Be sure to connect the power cord ground wire to the ground in the disconnect box.
- If installation of the plasma system involves connecting the power cord to the power supply, be sure to connect the power cord ground wire properly.
- Place the power cord's ground wire on the stud first, then place any other ground wires on top of the power cord ground. Fasten the retaining nut tightly.
- Tighten all electrical connections to avoid excessive heating.

COMPRESSED GAS EQUIPMENT SAFETY

- Never lubricate cylinder valves or regulators with oil or grease.
- Use only correct gas cylinders, regulators, hoses and fittings designed for the specific application.
- Maintain all compressed gas equipment and associated parts in good condition.
- Label and color-code all gas hoses to identify the type of gas in each hose. Consult applicable national or local codes.

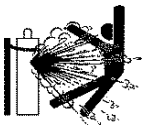

GAS CYLINDERS CAN EXPLODE IF DAMAGED

Gas cylinders contain gas under high pressure. If damaged, a cylinder can explode.

- Handle and use compressed gas cylinders in accordance with applicable national or local codes.
- Never use a cylinder that is not upright and secured in place.
- Keep the protective cap in place over valve except when the cylinder is in use or connected for use.
- Never allow electrical contact between the plasma arc and a cylinder.
- Never expose cylinders to excessive heat, sparks, slag or open flame.
- Never use a hammer, wrench or other tool to open a stuck cylinder valve.

NOISE CAN DAMAGE HEARING

Prolonged exposure to noise from cutting or gouging can damage hearing.

- Use approved ear protection when using plasma system.
- Warn others nearby about the noise hazard.

PACEMAKER AND HEARING AID OPERATION

Pacemaker and hearing aid operation can be affected by magnetic fields from high currents.
Pacemaker and hearing aid wearers should consult a doctor before going near any plasma arc cutting and gouging operations.

To reduce magnetic field hazards:

- Keep both the work cable and the torch lead to one side, away from your body.
- Route the torch leads as close as possible to the work cable.
- Do not wrap or drape the torch lead or work cable around your body.
- Keep as far away from the power supply as possible.

ADDITIONAL SAFETY INFORMATION

1. ANSI Standard Z49.1, *Safety in Welding and Cutting*, American Welding Society, 550 LeJeune Road P.O. Box 351020, Miami, FL 33135
2. ANSI Standard Z49.2, *Fire Prevention in the Use of Cutting and Welding Processes*, American National Standards Institute 1430 Broadway, New York, NY 10018
3. ANSI Standard Z87.1, *Safe Practices for Occupation and Educational Eye and Face Protection*, American National Standards Institute, 1430 Broadway, New York, NY 10018
4. AWS F4.1, *Recommended Safe Practices for the Preparation for Welding and Cutting of Containers and Piping That Have Held Hazardous Substances*, American Welding Society 550 LeJeune Road, P.O. Box 351040, Miami, FL 33135
5. AWS F5.2, *Recommended Safe Practices for Plasma Arc Cutting*, American Welding Society 550 LeJeune Road, P.O. Box 351040, Miami, FL 33135
6. CGA Pamphlet P-1, *Safe Handling of Compressed Gases in Cylinders*, Compressed Gas Association 1235 Jefferson Davis Highway, Arlington, VA 22202
7. CSA Standard W117.2, *Code for Safety in Welding and Cutting*, Canadian Standards Association Standard Sales 178 Rexdale Boulevard, Rexdale, Ontario M9W 1R3, Canada
8. NFPA Standard 51B, *Cutting and Welding Processes*, National Fire Protection Association 470 Atlantic Avenue, Boston, MA 02210
9. NFPA Standard 70–1978, *National Electrical Code*, National Fire Protection Association, 470 Atlantic Avenue, Boston, MA 02210
10. OSHA, *Safety and Health Standards*, 29FR 1910 U.S. Government Printing Office, Washington, D.C. 20402.

Section 1a

SÉCURITÉ

Cette section comprend:

IDENTIFIER LES CONSIGNES DE SÉCURITÉ 1a-2
SUIVRE LES INSTRUCTIONS DE SÉCURITÉ 1a-2
LE COUPAGE PEUT PROVOQUER UN INCENDIE OU UNE EXPLOSION .. 1a-2
LES CHOCS ÉLECTRIQUES PEUVENT ÊTRE FATALS 1a-3
LE COUPAGE PEUT PRODUIRE DES VAPEURS TOXIQUES 1a-3
L'ARC PLASMA PEUT PROVOQUER DES BLESSURES
OU DES BRÛLURES 1a-4
LES RAYONS DE L'ARC PEUVENT BRÛLER LES YEUX ET LA PEAU 1a-4
MISE À LA MASSE ET À LA TERRE 1a-4
SÉCURITÉ DES BOUTEILLES DE GAZ COMPRIMÉ 1a-5
LES BOUTEILLES DE GAZ COMPRIMÉ PEUVENT EXPLOSER EN CAS DE
DOMMAGES 1a-5
LE BRUIT PEUT PROVOQUER DES PROBLÈMES AUDITIFS 1a-5
PACEMAKERS ET PROTHÈSES AUDITIVES 1a-5

IDENTIFIER LES CONSIGNES DE SÉCURITÉ

Les symboles indiqués dans cette section sont utilisés pour identifier les risques éventuels. Si vous trouvez un symbole de sécurité, que ce soit dans ce manuel ou sur l'équipement, soyez conscient des risques de blessures et suivez les instructions correspondantes afin d'éviter ces risques.

SUIVRE LES INSTRUCTIONS DE SÉCURITÉ

Lire attentivement toutes les consignes de sécurité dans le présent manuel et sur les étiquettes de sécurité se trouvant sur la machine.

- Les étiquettes de sécurité doivent rester lisibles. Remplacer immédiatement les étiquettes manquantes ou abîmées.
- Apprendre à faire fonctionner la machine et à utiliser correctement les commandes. Ne laisser personne utiliser la machine sans connaître son fonctionnement.
- Garder la machine en bon état. Des modifications non autorisées sur la machine peuvent engendrer des problèmes de sécurité et raccourcir la durée d'utilisation de l'équipement.

DANGER AVERTISSEMENT PRÉCAUTION

Les signaux DANGER ou AVERTISSEMENT sont utilisés avec un symbole de sécurité, DANGER correspondant aux risques les plus sérieux.

- Les étiquettes de sécurité DANGER et AVERTISSEMENT sont situées sur la machine pour signaler certains dangers spécifiques.
- Les messages d'AVERTISSEMENT précèdent les instructions d'utilisation expliquées dans ce manuel et signalent les risques de blessures ou de mort au cas où ces instructions ne seraient pas suivies correctement.
- Les messages de PRÉCAUTION précèdent les instructions d'utilisation contenues dans ce manuel et signalent que le matériel risque d'être endommagé si les instructions ne sont pas suivies correctement.

LE COUPAGE PEUT PROVOQUER UN INCENDIE OU UNE EXPLOSION

Prévention des incendies

- Avant de commencer, s'assurer que la zone de coupage ne présente aucun danger. Conserver un extincteur à proximité.
- Éloigner toute matière inflammable à une distance d'au moins 10 m du poste de coupage.
- Tremper le métal chaud ou le laisser refroidir avant de le manipuler ou avant de le mettre en contact avec des matériaux combustibles.
- Ne jamais couper des récipients pouvant contenir des matières inflammables avant de les avoir vidés et nettoyés correctement.
- Aérer toute atmosphère potentiellement inflammable avant d'utiliser un système plasma.
- Lors de l'utilisation d'oxygène comme gaz plasma, un système de ventilation par aspiration est nécessaire.

Prévention des explosions

- Ne pas couper en présence de poussière ou de vapeurs.
- Ne pas couper de bouteilles, de tuyaux ou autres récipients fermés et pressurisés.
- Ne pas couper de récipients contenant des matières combustibles.

AVERTISSEMENT

Risque d'explosion
Argon-hydrogène et méthane

L'hydrogène et le méthane sont des gaz inflammables et potentiellement explosifs. Conserver à l'écart de toute flamme les bouteilles et tuyaux contenant des mélanges à base d'hydrogène ou de méthane. Maintenir toute flamme et étincelle à l'écart de la torche lors de l'utilisation d'un plasma d'argon-hydrogène ou de méthane.

AVERTISSEMENT

Détonation de l'hydrogène lors du coupage de l'aluminium

- Lors du coupage de l'aluminium sous l'eau, ou si l'eau touche la partie inférieure de la pièce d'aluminium, de l'hydrogène libre peut s'accumuler sous la pièce à couper et détonner lors du coupage plasma.
- Installer un collecteur d'aération au fond de la table à eau afin d'éliminer les risques de détonation de l'hydrogène. Se référer à l'annexe du manuel pour plus de renseignements sur les collecteurs d'aération.

LES CHOCS ÉLECTRIQUES PEUVENT ÊTRE FATALS

Toucher une pièce électrique sous tension peut provoquer un choc électrique fatal ou des brûlures graves.

- La mise en fonctionnement du système plasma ferme un circuit électrique entre la torche et la pièce à couper. La pièce à couper et tout autre élément en contact avec cette pièce font partie du circuit électrique.
- Ne jamais toucher le corps de la torche, la pièce à couper ou l'eau de la table à eau pendant le fonctionnement du système plasma.

Prévention des chocs électriques

Tous les systèmes plasma Hypertherm utilisent des hautes tensions pour le coupage (souvent de 200 à 400 V).On doit prendre les précautions suivantes quand on utilise le système plasma :

- Porter des bottes et des gants isolants et garder le corps et les vêtements au sec.
- Ne pas se tenir, s'asseoir ou se coucher sur une surface mouillée, ni la toucher quand on utilise le système plasma.
- S'isoler de la surface de travail et du sol en utilisant des tapis isolants secs ou des couvertures assez grandes pour éviter tout contact physique avec le travail ou le sol. S'il s'avère nécessaire de travailler dans ou près d'un endroit humide, procéder avec une extrême prudence.
- Installer un sectionneur avec fusibles appropriés, à proximité de la source de courant. Ce dispositif permet à l'opérateur d'arrêter rapidement la source de courant en cas d'urgence.
- En cas d'utilisation d'une table à eau, s'assurer que cette dernière est correctement mise à la terre.
- Installer et mettre à la terre l'équipement selon les instructions du présent manuel et conformément aux codes électriques locaux et nationaux.
- Inspecter fréquemment le cordon d'alimentation primaire pour s'assurer qu'il n'est ni endommagé, ni fendu. Remplacer immédiatement un cordon endommagé. **Un câble dénudé peut tuer**.
- Inspecter et remplacer les câbles de la torche qui sont usés ou endommagés.
- Ne pas saisir la pièce à couper ni les chutes lors du coupage. Laisser la pièce à couper en place ou sur la table de travail, le câble de retour connecté lors du coupage.
- Avant de vérifier, de nettoyer ou de remplacer les pièces de la torche, couper l'alimentation ou débrancher la prise de courant.
- Ne jamais contourner ou court-circuiter les verrouillages de sécurité.
- Avant d'enlever le capot du système ou de la source de courant, couper l'alimentation électrique. Attendre ensuite 5 minutes pour que les condensateurs se déchargent.
- Ne jamais faire fonctionner le système plasma sans que les capots de la source de courant ne soient en place. Les raccords exposés de la source de courant sont extrêmement dangereux.
- Lors de l'installation des connexions, attacher tout d'abord la prise de terre appropriée.
- Chaque système plasma Hypertherm est conçu pour être utilisé uniquement avec des torches Hypertherm spécifiques. Ne pas utiliser des torches inappropriées qui pourraient surchauffer et présenter des risques pour la sécurité.

LE COUPAGE PEUT PRODUIRE DES VAPEURS TOXIQUES

Le coupage peut produire des vapeurs et des gaz toxiques qui réduisent le niveau d'oxygène dans l'air et peuvent provoquer des blessures, voire la mort.

- Conserver le poste de coupage bien aéré ou utiliser un masque respiratoire homologué.
- Ne pas procéder au coupage près d'endroits où s'effectuent le dégraissage, le nettoyage ou la vaporisation. Certains solvants chlorés se décomposent sous l'effet des rayons ultraviolets et forment du phosgène.
- Ne pas couper des métaux peints ou contenant des matières toxiques comme le zinc (galvanisé), le plomb, le cadmium ou le béryllum, à moins que la zone de travail soit très bien ventilée et que l'opérateur porte un masque respiratoire. Les revêtements et métaux contenant ces matières peuvent produire des vapeurs toxiques lors du coupage.
- Ne jamais couper de récipients pouvant contenir des matières inflammables avant de les avoir vidés et nettoyés correctement.

L'ARC PLASMA PEUT PROVOQUER DES BLESSURES OU DES BRÛLURES

Torches à allumage instantané
L'arc plasma s'allume immédiatement après que la torche soit mise en marche.

L'arc plasma coupe facilement les gants et la peau.
- Rester éloigné de l'extrémité de la torche.
- Ne pas tenir de métal près de la trajectoire de coupe.
- Ne jamais pointer la torche vers soi ou d'autres personnes.

LES RAYONS DE L'ARC PEUVENT BRÛLER LES YEUX ET LA PEAU

Protection des yeux Les rayons de l'arc plasma produisent de puissants rayons visibles ou invisibles (ultraviolets et infrarouges) qui peuvent brûler les yeux et la peau.
- Utiliser des lunettes de sécurité conformément aux codes locaux ou nationaux en vigueur.
- Porter des lunettes de protection (lunettes ou masque muni d'écrans latéraux ou encore masque de soudure) avec des verres teintés appropriés pour protéger les yeux des rayons ultraviolets et infrarouges de l'arc.

Courant de l'arc	Puissance des verres teintés AWS (É.-U.)	ISO 4850
Jusqu'à 100 A	N° 8	N° 11
100-200 A	N° 10	N° 11-12
200-400 A	N° 12	N° 13
Plus de 400 A	N° 14	N° 14

Protection de la peau Porter des vêtements de sécurité pour se protéger contre les brûlures que peuvent causer les rayons ultraviolets, les étincelles et le métal brûlant :
- Gants à crispin, chaussures et casque de sécurité.
- Vêtements ignifuges couvrant toutes les parties exposées du corps.
- Pantalon sans revers pour éviter que des étincelles ou des scories puissent s'y loger.
- Avant le coupage, retirer de ses poches tout objet combustible comme les briquets au butane ou les allumettes.

Zone de coupage Préparer la zone de coupage afin de réduire la réverbération et la transmission de la lumière ultraviolette :
- Peindre les murs et autres surfaces de couleur sombre pour réduire la réflexion de la lumière.
- Utiliser des écrans et autres dispositifs de protection afin de protéger les autres personnes de la lumière et de la réverbération.
- Prévenir les autres personnes de ne pas regarder l'arc. Utiliser des affiches ou des panneaux.

MISE À LA MASSE ET À LA TERRE

Câble de retour Bien fixer le câble de retour (ou de masse) à la pièce à couper ou à la table de travail de façon à assurer un bon contact métal-métal. Ne pas fixer le câble de retour à la partie de la pièce qui doit se détacher.

Table de travail Raccorder la table de travail à la terre, conformément aux codes de sécurité locaux ou nationaux appropriés.

Alimentation
- S'assurer que le fil de terre du cordon d'alimentation est connecté à la terre dans le coffret du sectionneur.
- S'il est nécessaire de brancher le cordon d'alimentation à la source de courant lors de l'installation du système, s'assurer que le fil de terre est correctement branché.
- Placer tout d'abord le fil de terre du cordon d'alimentation sur le plot de mise à la terre puis placer les autres fils de terre par-dessus. Bien serrer l'écrou de retenue.
- S'assurer que toutes les connexions sont bien serrées pour éviter la surchauffe.

SÉCURITÉ DES BOUTEILLES DE GAZ COMPRIMÉ

- Ne jamais lubrifier les robinets des bouteilles ou les régulateurs avec de l'huile ou de la graisse.
- Utiliser uniquement les bouteilles, régulateurs, tuyaux et accessoires appropriés et conçus pour chaque application spécifique.
- Entretenir l'équipement et les pièces d'équipement à gaz comprimé afin de les garder en bon état.
- Étiqueter et coder avec des couleurs tous les tuyaux de gaz afin d'identifier le type de gaz contenu dans chaque tuyau. Se référer aux codes locaux ou nationaux en vigueur.

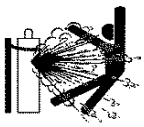

LES BOUTEILLES DE GAZ COMPRIMÉ PEUVENT EXPLOSER EN CAS DE DOMMAGES

Les bouteilles de gaz contiennent du gaz à haute pression. Si une bouteille est endommagée, elle peut exploser.

- Manipuler et utiliser les bouteilles de gaz comprimé conformément aux codes locaux ou nationaux.
- Ne jamais utiliser une bouteille qui n'est pas placée à la verticale et bien assujettie.
- Le capuchon de protection doit être placé sur le robinet sauf si la bouteille est en cours d'utilisation ou connectée pour utilisation.
- Éviter à tout prix le contact électrique entre l'arc plasma et une bouteille.
- Ne jamais exposer des bouteilles à une chaleur excessive, aux étincelles, aux scories ou aux flammes nues.
- Ne jamais utiliser des marteaux, des clés ou d'autres outils pour débloquer le robinet des bouteilles.

LE BRUIT PEUT PROVOQUER DES PROBLÈMES AUDITIFS

Une exposition prolongée au bruit du coupage ou du gougeage peut provoquer des problèmes auditifs.

- Utiliser un casque de protection homologué lors de l'utilisation du système plasma.
- Prévenir les personnes aux alentours des risques encourus en cas d'exposition au bruit.

PACEMAKERS ET PROTHÈSES AUDITIVES

Les champs magnétiques produits par les courants à haute tension peuvent affecter le fonctionnement des prothèses auditives et des pacemakers. Les personnes portant ce type d'appareil doivent consulter un médecin avant de s'approcher d'un lieu où s'effectue le coupage ou le gougeage plasma.

Pour réduire les risques associés aux champs magnétiques :

- Garder loin de soi et du même côté du corps le câble de retour et le faisceau de la torche.
- Faire passer le faisceau de la torche le plus près possible du câble de retour.
- Ne pas s'enrouler le faisceau de la torche ou le câble de retour autour du corps.
- Se tenir le plus loin possible de la source de courant.

Section 2 SPECIFICATIONS

In this section:

Introduction 2-2
Specifications 2-3
Power Supply 2-3
PAC125 Torches 2-4
PAC125T Hand Torch Assembly 2-4
PAC125M Machine Torch Assembly 2-4
S Mark 2-5
IEC Symbols Used 2-6

INTRODUCTION

The Powermax900 plasma cutting system uses an inverter power supply to provide a smooth DC output voltage, producing excellent cut and gouge quality on mild steel, stainless steel, aluminum and other metals. The Powermax900 power supply provides constant-current output variable from 20 to 55 amps, for optimum performance on all thicknesses of metal up to 5/8" (16 mm) thick. At 55 amps, the Powermax900 can also cut metals up to 7/8" (22 mm) thick and will sever metals up to 1-1/8" (29 mm) thick.

Air is the primary plasma gas, providing low operating cost combined with high-speed performance. Cylinder air or shop air can be used as long as it is clean, dry and oil-free. When properly set and maintained, the pressure regulator and gas filter on the power supply ensure that the correct pressure and flow rate is supplied to the system at the proper quantity and quality. The Powermax900 can also cut with nitrogen when extended electrode life is a priority.

This instruction manual provides information for the user to set up and operate the system and perform limited maintenance on the power supply. This manual also provides a detailed list of safety practices so that the system can be safely operated and maintained. **READ THE SAFETY SECTION (Section 1) FIRST!**

The Powermax900 service manual provides higher-level troubleshooting and a more complete parts list.

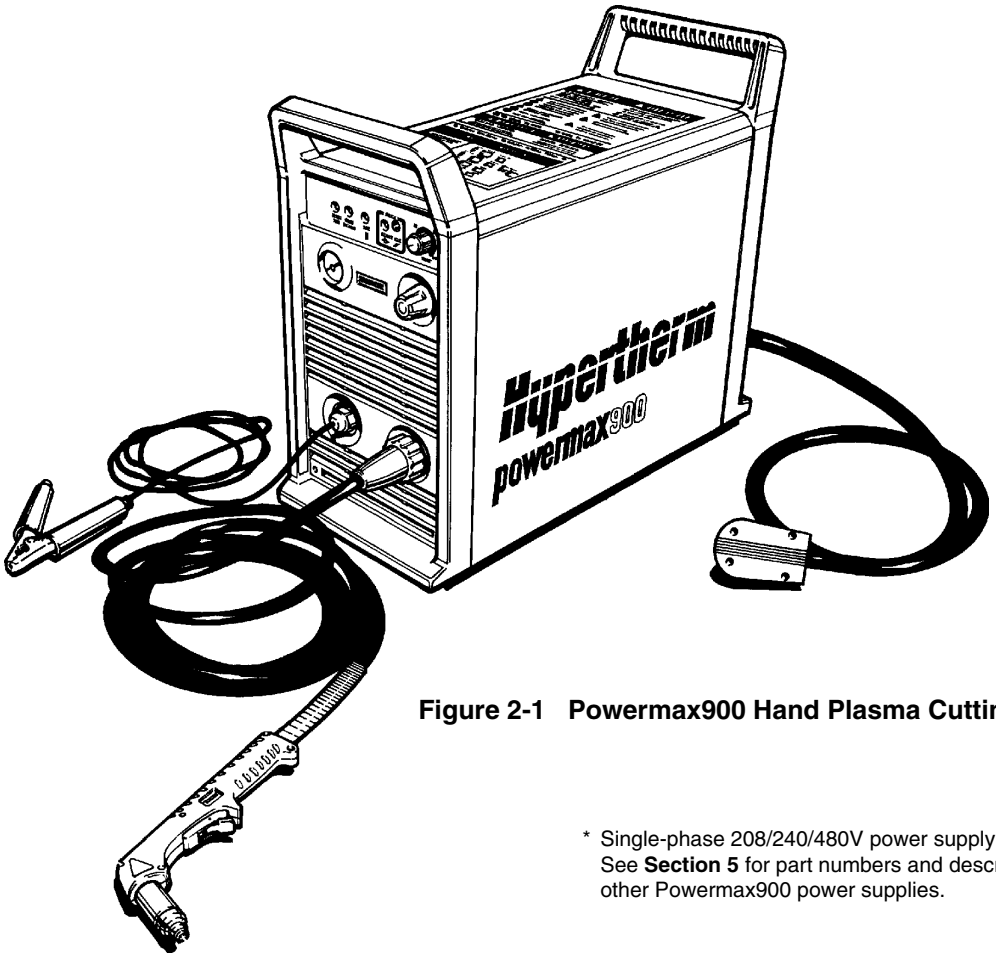

Figure 2-1 Powermax900 Hand Plasma Cutting System*

* Single-phase 208/240/480V power supply shown. See **Section 5** for part numbers and descriptions of other Powermax900 power supplies.

SPECIFICATIONS

Power Supply

Rated Open Circuit Voltage (OCV) (U_0)	300 VDC
Rated Output Current (I_2)	20–55 amps
Rated Output Voltage (U_2)	120 VDC
Duty Cycle (X) @ 40°C	50% (I_2=55A, U_2=120V) 100% (I_2=39A, U_2=120V for the 208/240/480V power supplies) See data tag on power supply for more information on duty cycle.
Ambient temperature/duty cycle	Power supplies will operate between +14° and 104° F (-10° and +40° C). Power supplies operated in an ambient temperature above 86° F (30° C) may show some decrease in duty cycle.
Apparent Input Power (S_1)	12.5kVA (U_1I_1)
Input Voltage (U_1)/Input Current (I_1) @ 6.6 kw Output	208V/55A; 240V/47A; 480V/28A - 1ϕ, 50/60 Hz 208V/32A; 240V/28A; 480V/15A - 3ϕ, 50/60 Hz 200V/57A; 230V/50A; 400V/33A - 1ϕ, 50/60 Hz 200V/33A; 230V/29A; 400V/18A - 3ϕ, 50/60 Hz 230V (CE)/29A; 400V (CE)/18A - 3ϕ, 50/60 Hz 600V/12A - 3ϕ, 60 Hz
Dimensions and Weight:	
Depth	23.1" (590 mm)
Width	10.4" (260 mm) without wheels 15.3" (390 mm) with wheels
Height	19.6" (500 mm) without wheels 23.7" (620 mm) with wheels 27.7" (700 mm) for 600V power supply

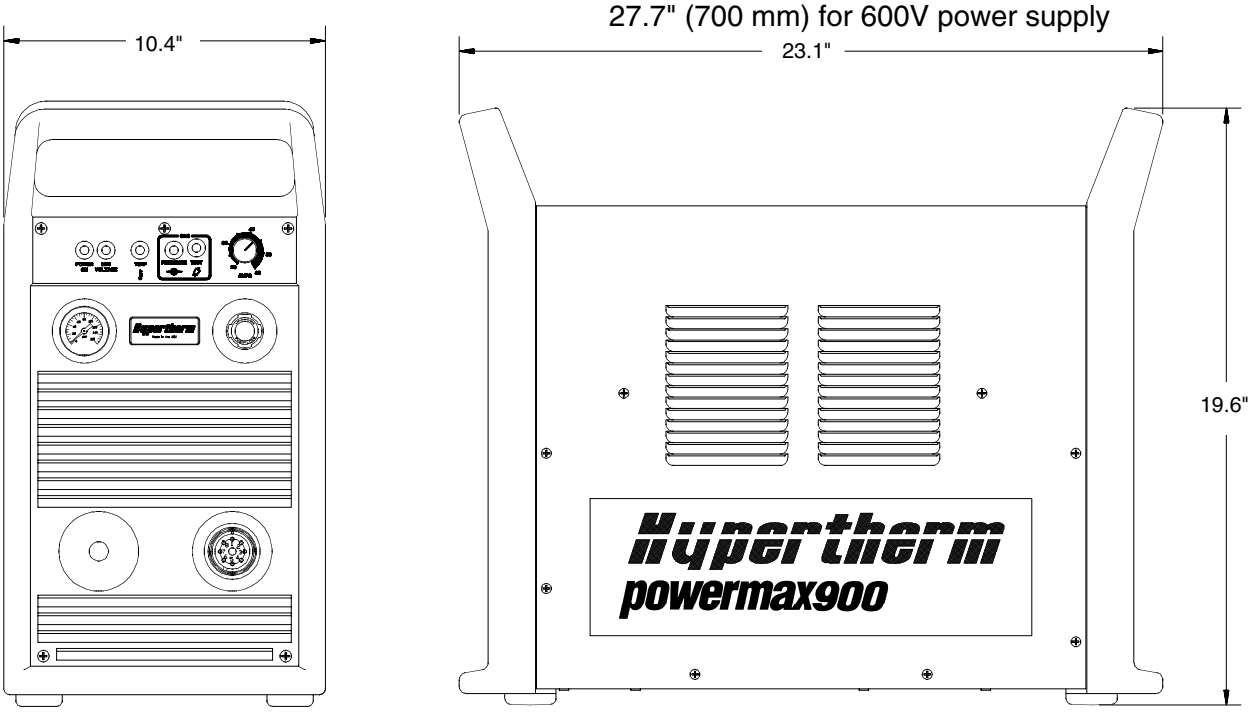

Figure 2-2 Powermax900 Power Supply with Dimensions

Weight	65 pounds (30 kg) without wheels 72 pounds (33 kg) with wheels 128 pounds (58 kg) for 600V and 230V-CE power supplies
Gas Type	Air or Nitrogen
Gas Quality, Air	Clean, dry, oil-free
Gas Quality, Nitrogen	99.995% pure
Gas Inlet Pressure	90 psi (6.2 bar)
Gas Flow	360 scfh/6 scfm at 90 psi (170 l/min at 6.2 bar) supplied to power supply pressure regulator
Power Supply pressure regulator setting	70 psi (4.8 bar) flowing

PAC125 TORCHES

Maximum 55A Cutting Capacity (PAC125T)	7/8" (22 mm) @ 50% duty cycle
Maximum 55A Cutting Capacity (PAC125M)	1/2" (13 mm) @ 50% duty cycle
Maximum 39A Cutting Capacity (PAC125M)	3/8" (9.5 mm) @ 100% duty cycle
Maximum current at 50% duty cycle	55 amps
Gouging Capability (metal removal rate)	6.3 pounds (2.9 kg)/hr
Weight PAC125T	4.5 pounds (2 kg) with 25 ft (7.6 m) lead 7 pounds (3.2 kg) with 50 ft (15 m) lead
Weight PAC125M	7 pounds (3.2 kg) with 25 ft (7.6 m) lead 9.5 pounds (4.3 kg) with 50 ft (15 m) lead

PAC125T Hand Torch Assembly

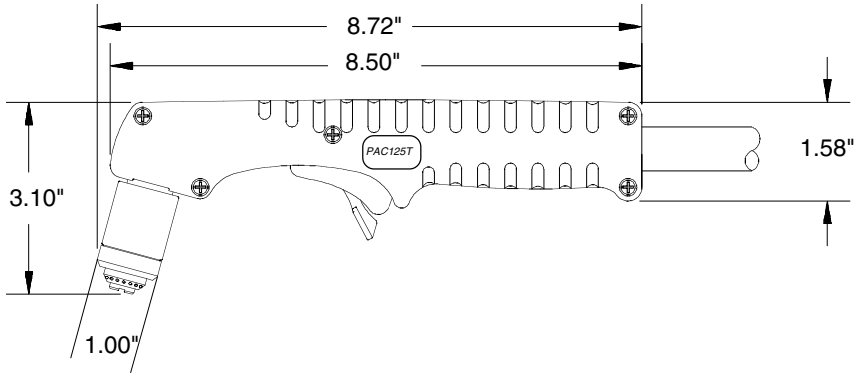

Figure 2-3 PAC125T Torch with Dimensions

PAC125M Machine Torch Assembly

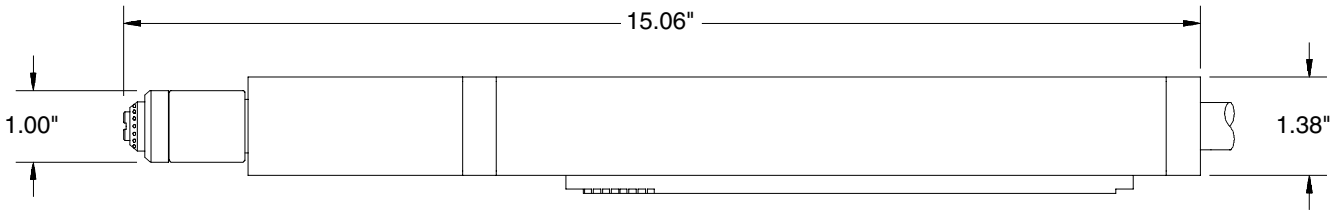

Figure 2-4 PAC125M Torch with Dimensions

S MARK

The Powermax900 conforms to CE standard EN50192. The S mark indicates that the power supply and torch are suitable for use in environments with increased hazard of electrical shock. The hand torches must have shielded consumable parts to maintain S mark compliance.

IEC SYMBOLS USED

	Direct Current (DC)
	Alternating current (AC)
	Plasma cutting torch
	AC input power connection
	The terminal for the external protective (earth) conductor
	An inverter-based power source
	Anode (+) work clamp
	Temperature switch
	Pressure switch
	Plasma torch in the TEST position (cooling and cutting gas exiting nozzle)
I	Power is on
O	Power is off
	Volt/amp curve, "drooping" characteristic

Section 3 SETUP

In this section:

Upon Receipt 3-2
Claims 3-2
Hoisting Requirements 3-3
Voltage Configurations 3-4
Power Cord Plugs 3-6
Power Cords 3-6
    208/240/480/600V Power Supplies 3-6
    200/230/400V Power Supplies 3-6
Single-Phase and Three-Phase Power Configurations 3-7
    Single-Phase 3-7
    Three-Phase - Non-CE 3-7
    Three-Phase CE 3-8
Power Requirements 3-8
    Line Voltage Disconnect Box 3-8
Grounding Requirements 3-9
Work Cable and Clamp 3-9
Gas Supply Requirements 3-10
    Cylinder or Shop Compressed Air Supply 3-10
    Additional Air Filtration 3-10
    Nitrogen Supply 3-10
Gas Supply Connection 3-11
Torch Lead Connection 3-11
    PAC125M ON/OFF Pendant Connection 3-12
    PAC125M Torch ON/OFF Switch Connection Data 3-12
    PAC125M Torch Alignment 3-12
Machine Interface with PAC125M 3-13
    Arc Voltage 3-14

UPON RECEIPT

1. Verify that all parts and items on your order have been received. Alert your distributor if any parts or items are damaged or missing.

2. Inspect the power supply for any physical damage that may have occurred during shipping. If there is evidence of damage, refer to the *Claims* section below.

   All communications regarding this equipment must include the model number and serial number located on the back of the Powermax900.

3. Before setting up and operating the Powermax900, read the **Safety** section of this manual.

CLAIMS

Claims for damage during shipment — If your unit was damaged during shipment, you must file a claim with the carrier. Hypertherm will furnish you with a copy of the bill of lading upon request. If you need additional assistance, call Customer Service listed in the front of this manual, or your authorized Hypertherm distributor.

Claims for defective or missing merchandise — If any of the merchandise is defective or missing, call your authorized Hypertherm distributor. If you need additional assistance, call Customer Service listed in the front of this manual.

HOISTING REQUIREMENTS

If the power supply must be hoisted, read the **Warning** first and follow this procedure. See Fig. 3-1:

WARNING

The Powermax900 power supply weighs up to 135 pounds (61 kg). Do not hoist the power supply by one handle; it is not designed to support the weight of the power supply.

Failure to heed this warning could result in personal injury and damage to the power supply.

1. Use a hoisting strap rated for 4x the full weight.
2. Ensure the power supply cover is secured prior to hoisting.
3. Route strap between both handles as shown in Fig. 3-1.
4. Bring the strap ends together over the center of the power supply and connect them to the hoisting machine.
5. Hoist and lower the power supply slowly and smoothly - avoid jerking motions.

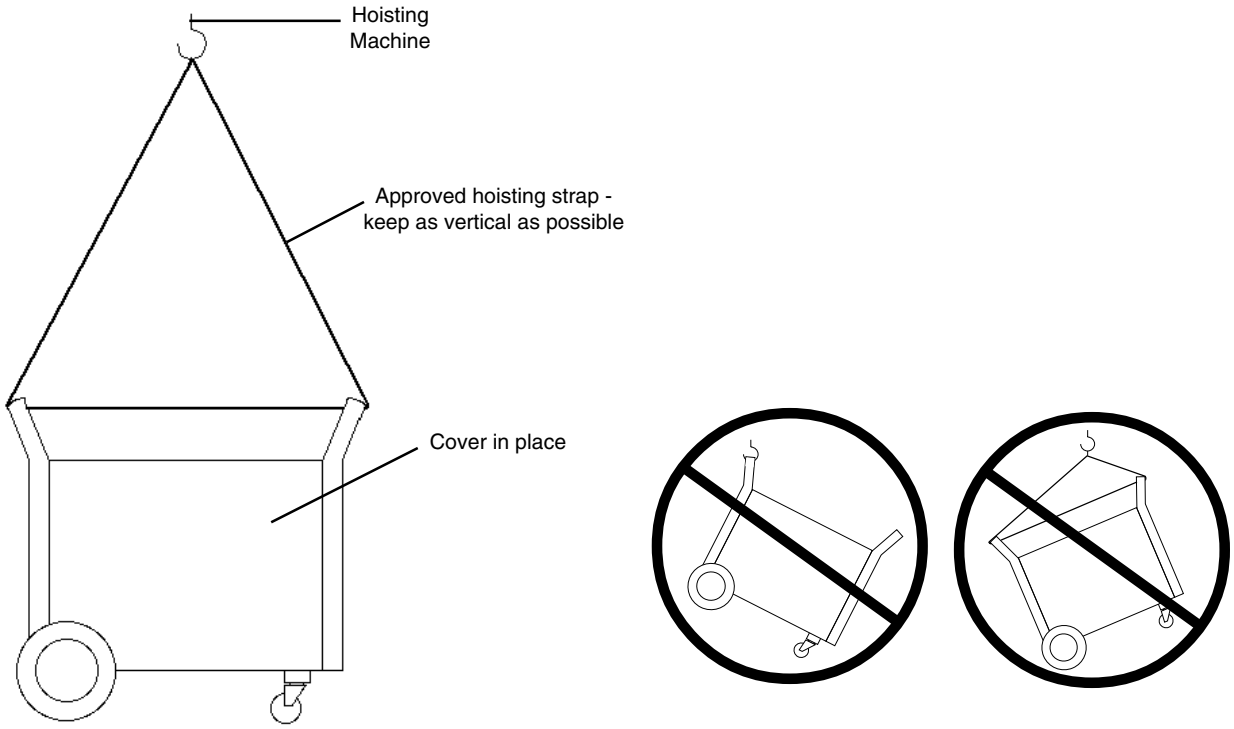

Figure 3-1 Powermax900 Power Supply Hoisting Setup

VOLTAGE CONFIGURATIONS

WARNING

SHOCK HAZARD: Always turn off power, unplug cord from wall and wait 5 minutes before removing any power supply cover. If power supply is directly connected to a line disconnect switch, place line disconnect switch in OFF position. In the U.S., use a "lock-out / tag-out" procedure until the service or maintenance work is complete. In other countries, follow appropriate national or local safety procedures.

The 400V CE Powermax900 power supplies are shipped to operate at 400 volts and do not require any voltage configuration change.

The 208/240/480V Powermax900 power supplies are shipped to operate at 240 volts.

The 200/230/400V Powermax900 power supplies are shipped to operate at 400 volts.

To operate at an alternate voltage, remove the rear panel, and configure the wires and jumpers on TB2 and TB3 as shown on the facing page.

Notes:
- When switching to the 400 or 480V configuration, secure unused link box jumper in the clip located in the link box.
- If using the 600V transformer option kit, configure the 3ϕ Powermax900 for 480V (Fig. 3-5).
- See also *Power Cords* later in this section.

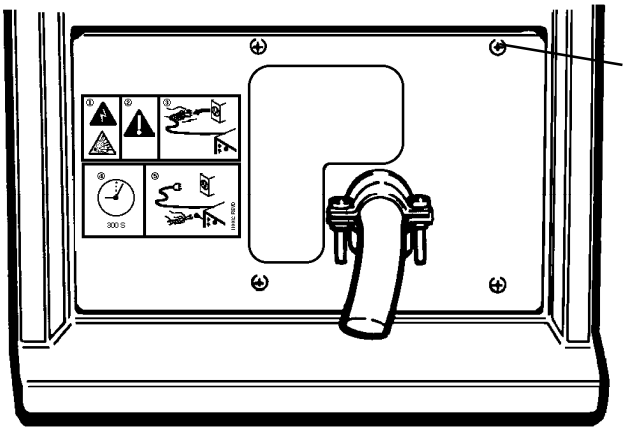

Figure 3-2 Rear Panel

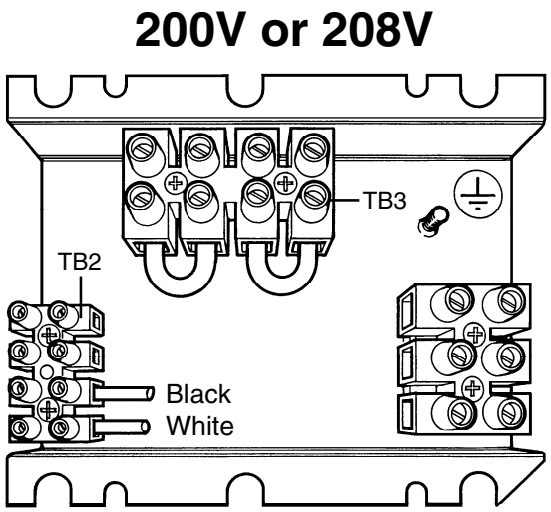

Figure 3-3 200V or 208V Configuration

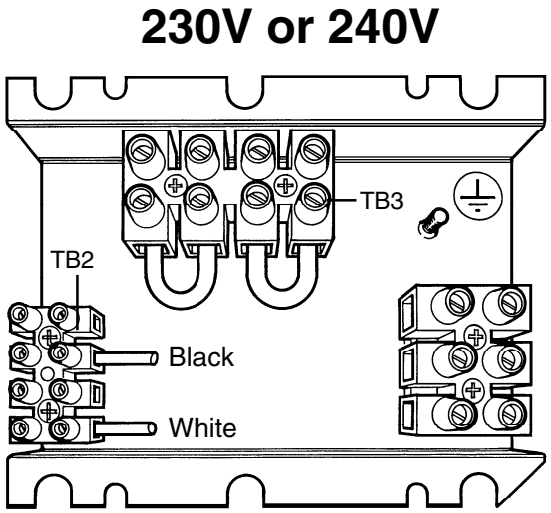

Figure 3-4 230V or 240V Configuration

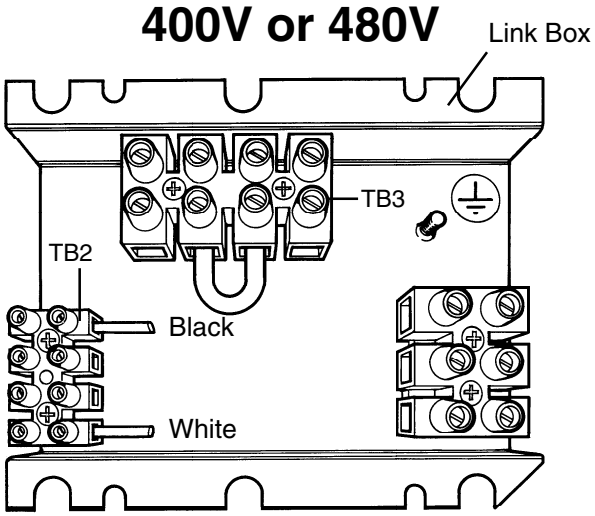

Figure 3-5 400V or 480V Configuration

POWER CORD PLUGS

All 208/240/480V power supplies are shipped with a single-phase power cord and plug. To operate as a three-phase unit, the user must obtain a power cord and plug that is certified by national or local electrical codes. The plug should be connected to the power cord by a licensed electrician.

All 200/230/400V and 400V CE power supplies are shipped with a three-phase power cord and no plug. The user must obtain a plug that is certified by national or local electrical codes. The plug should be connected to the power cord by a licensed electrician.

POWER CORDS

If the power cord needs to be changed, use the tables below to choose the proper wire size for the appropriate length cord. Note that the input current used to determine the cord size is I_{1eff}. In the U.S., use a 3-conductor SO type cord for single-phase, and a 4-conductor SO type cord for three-phase power supplies. In other countries, use cords that are certified by national or local codes. Prepare the power cord wires as shown in Fig. 3-6 for non-CE power supplies, or Fig. 3-6a for CE power supplies. Note that all 4 wires must loop through the toroid in the CE power supply. Cap or tin the conductor leads and use a #10 terminal on the ground wire. The cord should be installed only by a licensed electrician.

208/240/480/600V Power Supplies

Input Voltage	Phase	Input Current (I_{1eff})	Recommended Power Cord Gauge Size (AWG) < 10 ft	10 – 25 ft	25 – 50 ft	50 – 100 ft	100 – 150 ft
208 VAC	1	39A	8	8	6	4	4
240 VAC	1	33A	8	8	8	6	4
480 VAC	1	19A	12	12	12	10	8
208 VAC	3	23A	8	8	8	6	4
240 VAC	3	20A	10	10	10	8	6
480 VAC	3	10A	12	12	12	12	10
600 VAC	3	8A	12	12	12	12	10

200/230/400V Power Supplies

Input Voltage	Phase	Input Current (I_{1eff})	Recommended Power Cord Gauge Size (mm^2) < 3 m	3 – 7.5 m	7.5 – 15 m	15 – 30 m	30 – 45 m
200 VAC	1	40A	10	10	16	25	25
230 VAC	1	35A	6	6	10	16	25
400 VAC	1	23A	4	4	4	6	10
200 VAC	3	23A	4	4	6	16	25
230 VAC	3	21A	2.5	4	6	10	16
400 VAC	3	13A	2.5	2.5	2.5	4	6

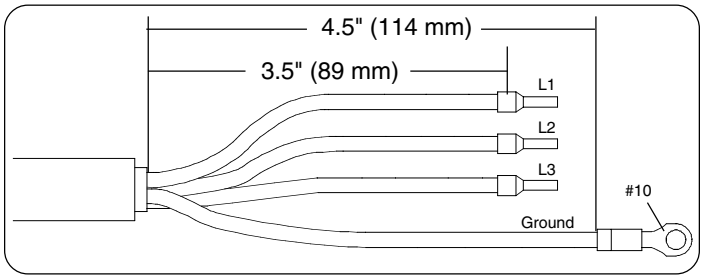

Figure 3-6 Power Cord Preparation - Non-CE

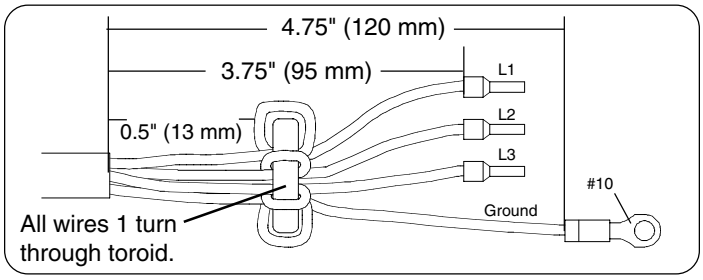

Figure 3-6a Power Cord Preparation - CE

SINGLE-PHASE AND THREE-PHASE POWER CONFIGURATIONS

All Powermax900 power supplies except the 400V CE and 600V power supplies can operate from either a single-phase or three-phase input. The 400V CE, 230V CE and 600V power supplies operate only from a three-phase input.

Power cords must meet the specifications described earlier in this section. Follow applicable local or national wire-color conventions. See also **EMC Compatibility** and *Mains Supply* on page i for further CE compliance recommendations.

WARNING

SHOCK HAZARD: Always turn off power, unplug cord from wall and wait 5 minutes before removing any power supply cover. If power supply is directly connected to a line disconnect switch, place line disconnect switch to OFF position. In the U.S., use a "lock-out / tag-out" procedure until the service or maintenance work is complete. In other countries, follow appropriate national or local safety procedures.

Remove the rear panel (Fig. 3-2) and connect the power cable to terminal block TB1 as shown in the figures below. Connect the ground wire to the stud marked ⏚ above the terminal block.

Single-Phase

Conductor	Color
Line (U)	Black or Brown
Neutral/Line (V)	White or Blue
Ground	Green or Green/Yellow

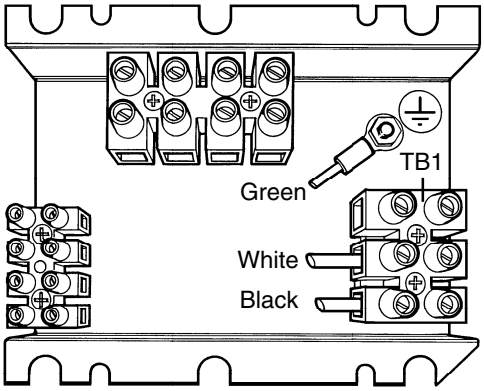

Figure 3-7
Single-Phase Power

Three-Phase - Non-CE

Conductor	Color
L1 (U)	Brown or Black
L2 (V)	Blue or White
L3 (W)	Black or Red
Ground	Green/Yellow or Green

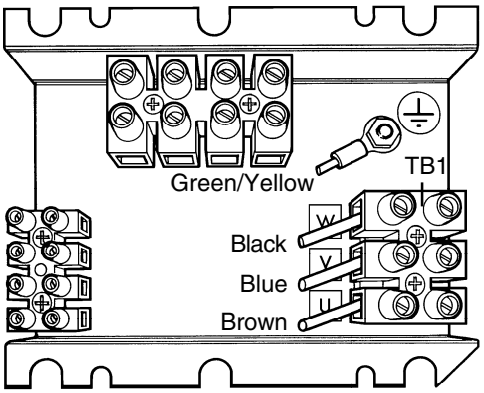

Figure 3-8
Three-Phase Power
Non-CE

Three-Phase - CE

Conductor	Color
Ground	Green/Yellow
L3 (W)	Black
L2 (V)	Blue
L1 (U)	Brown

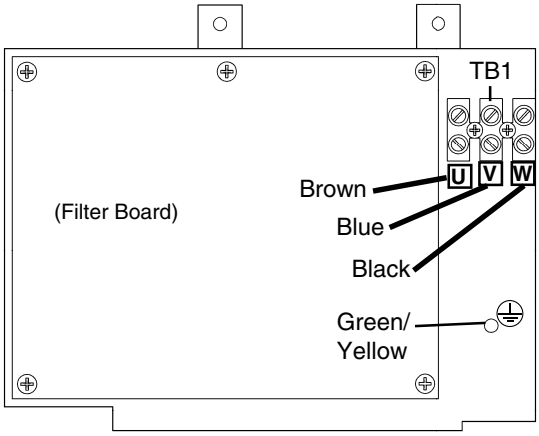

Note: See also **EMC Compatibility** and *Mains Supply* on page i for further power (supply) cable shielding recommendations for CE compliance.

Figure 3-9
Three-Phase CE Power

POWER REQUIREMENTS

Line Voltage Disconnect Box

Use a line disconnect box for each power supply. This disconnect box allows the operator to turn the power supply off quickly in an emergency situation. The switch should be located on a wall near the power supply, and should be easily accessible to the operator. The interrupt level of the switch must be equal to or exceed the continuous rating of the fuses. Use slow-blow fuses according to the power requirements listed below.

Input Voltage	Phase	Input Current @ 6.6 kw Output	Recommended Slow-Blow Fuse Size
200 VAC	1	57 amps	70 amp
208 VAC	1	55 amps	70 amp
230 VAC	1	50 amps	70 amp
240 VAC	1	47 amps	60 amp
400 VAC	1	33 amps	40 amp
480 VAC	1	28 amps	35 amp
200 VAC	3	33 amps	40 amp
208 VAC	3	32 amps	40 amp
230 VAC	3	29 amps	35 amp
230 VAC (CE)	3	31 amps	40 amp
240 VAC	3	28 amps	35 amp
400 VAC	3	18 amps	25 amp
400 VAC (CE)	3	18 amps	25 amp
480 VAC	3	15 amps	20 amp
600 VAC	3	12 amps	20 amp

GROUNDING REQUIREMENTS

To ensure personal safety, proper operation, and to reduce electromagnetic interference (EMI), the Powermax900 must be properly grounded:

- The power supply must be properly grounded through the power cord according to your national or local electrical codes. The power supply chassis is electrically conductive and can present a shock hazard if it is not properly grounded through the line voltage disconnect box. Single-phase service must be of the 3-wire type with a green or green/yellow wire for protective earth ground. It must comply with local electrical requirements. **Do not use a 2-wire service!** Refer to *Grounding*, in the **Safety** section. Three-phase service must be of the 4-wire type with a green/yellow wire for protective earth ground. It must comply with local electrical requirements.

- Refer to the *Standards Index,* in the **Appendix** section, for other electrical codes.

WORK CABLE AND CLAMP

The work clamp must be attached to the workpiece to perform plasma cutting. Ensure that the work clamp and the workpiece make good metal-to-metal contact. Attach the work clamp as close as possible to the area being cut to reduce exposure to electric and magnetic fields (EMF). Do not attach the work clamp to the portion of the workpiece to be cut away. See Fig. 3-10.

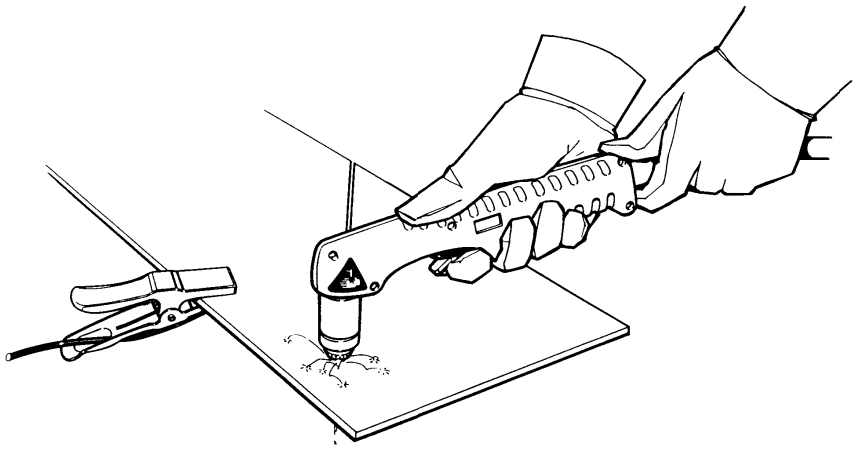

Figure 3-10 Proper Work Clamp Connection

GAS SUPPLY REQUIREMENTS

The gas supply for the Powermax900 can be either air or nitrogen. Air can be supplied as shop compressed air or cylinder compressed air. Nitrogen can be supplied from compressed gas cylinders or liquid containers. A high-pressure regulator on either type of supply must be used and must be capable of delivering the following:

> **360 scfh/6 scfm (170 l/min)** at a pressure of **90 psi (6.2 bar)** to the filter on the power supply.

The filter is mounted at the rear of the Powermax900 power supply. See Fig. 3-12.

WARNING

Do not allow the gas inlet pressure to the filter on the power supply to exceed 120 psi (8.2 bar). The plastic filter bowl is rated for 150 psi (10.3 bar) and may explode if this pressure is exceeded. See the label on the filter bowl for other safety warnings.

Air Supply Quality

The cylinder or shop compressed air supply must be clean, dry and oil-free. If air supply quality is poor, cut speeds decrease, cut quality deteriorates, cutting thickness capability decreases, and parts life shortens.

Additional Air Filtration

Use a three-stage coalescing filtration system as shown in Fig. 3-11 when site conditions introduce moisture, oil or other contaminants into the air line.

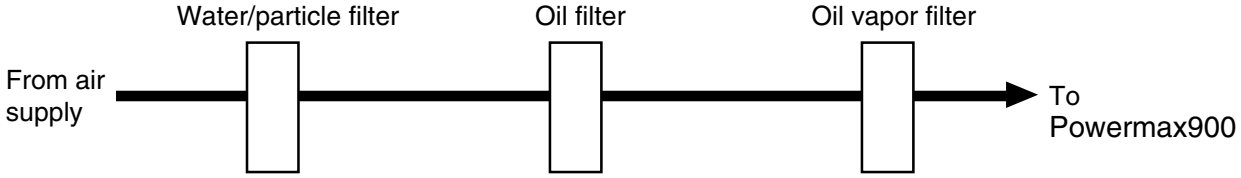

Figure 3-11 Recommended Three-Stage Air Filtration System

Nitrogen Quality

Nitrogen must be supplied to the Powermax900 at 99.995% purity. If the purity level of the nitrogen is too low, cut speeds decrease, cut quality deteriorates, cutting thickness capability decreases, and parts life shortens. (Note: These conditions also occur if there are leaks in the gas supply hoses or connections.) The nitrogen supply can be compressed gas cylinders or liquid containers.

GAS SUPPLY CONNECTION

Use a 3/8 inch ID inert gas hose to connect the gas supply (air or nitrogen) to the filter at the rear of the power supply. To connect the hose to the power supply, install a 1/8 NPT nipple or adapter to the filter block as shown in Fig. 3-12. Apply liquid pipe sealant to the threads to ensure a leak-free installation. A nipple and adapters are included with the consumable parts kit.

CAUTION:	Never use PTFE tape when installing the nipple or adapters. Bits of tape can break off and enter the air line and harm the pressure regulator, pressure switch and valve.

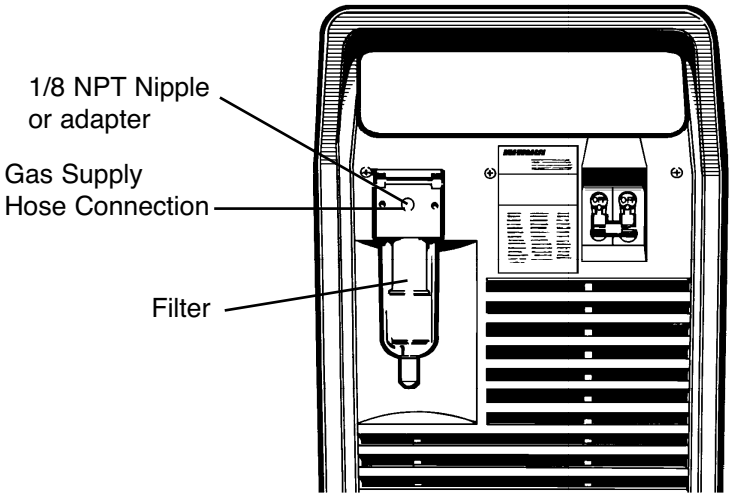

Figure 3-12 Rear Panel, Gas Supply Connection to Filter

TORCH LEAD CONNECTION

To connect the PAC125T or PAC125M torch lead to the power supply:

1. Align the connector key plugs (on the torch lead) with the connector receptacle key slots (on the power supply) and push in until the pins seat.

2. Turn the connector securing ring 1/4 turn to the left to ensure that the securing ring threads and the connector receptacle threads are aligned prior to tightening.

3. Turn the connector securing ring to the right to tighten.

Note: The PAC121 torches (used with the Powermax800 and other Hypertherm products), cannot be connected to the Powermax900 power supply.

PAC125M ON/OFF Pendant Connection

WARNING

Do not connect cutting machine interface START signal if using the ON/OFF pendant! (See page 3-13)

To connect the on/off pendant lead to the PAC125M machine torch pigtail:

1. Align the pendant lead connector key plug with the connector receptacle key slot on the pigtail and push in until pins seat.

2. Turn the connector securing ring to the right to tighten.

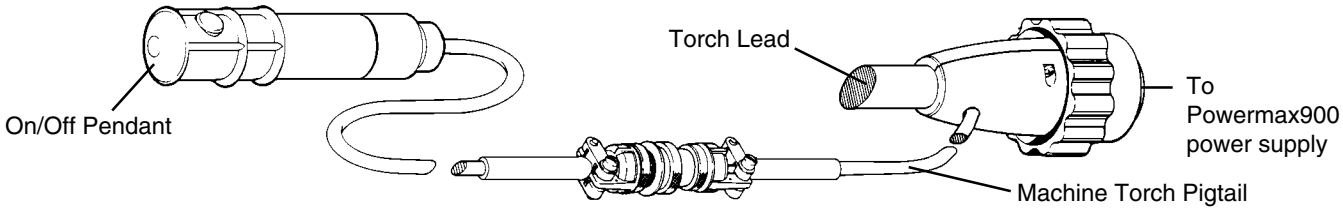

Figure 3-13 ON/OFF Pendant Connection

PAC125M Torch ON/OFF Switch Connection Data

The PAC125M torch lead is supplied with a pigtail so that the on/off pendant may be used. If you want to use a different on/off switch configuration, note that the wiring configuration to the 3-socket female receptacle on the pigtail is as follows:

Socket A	White Wire
Socket B	Not Used
Socket C	Black Wire

PAC125M Torch Alignment

Mount the machine torch perpendicular to the workpiece in order to get a vertical cut. Use a square to align the torch at 0° and 90° as shown in Fig. 3-14.

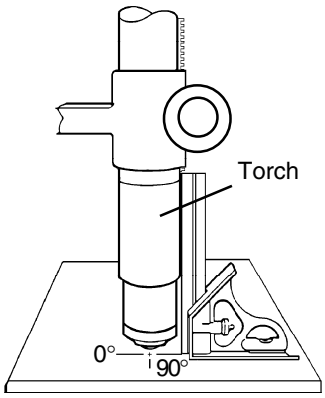

Figure 3-14 Aligning the Machine Torch with Square

MACHINE INTERFACE WITH PAC125M

Signals for arc transfer and start are available on power supplies that have the machine interface option. The machine interface option is also available as an upgrade kit.

WARNING

Do not connect cutting machine interface START signal if using an ON/OFF pendant!

- Plug the machine interface cable into the connector on the rear panel. See Fig. 3-15 to connect the machine interface cable to the cutting machine.

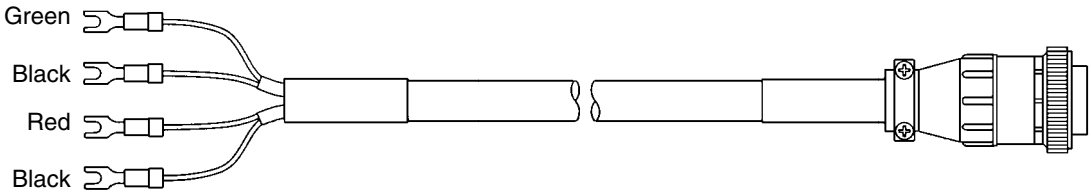

Signal:	START (start plasma)	XFER (start machine motion)
Type:	Input	Output
Notes:	Normally open. 24VAC open circuit voltage at START terminals. Requires dry contact closure to activate.	Normally open. Dry contact closure when arc transfers. 120VAC maximum at machine interface relay or switching device.
Rear panel sockets	3, 4	12, 14
Cable wires	Green, Black	Red, Black

Figure 3-15 Machine Interface Cable and Signals

Arc Voltage

If arc voltage is necessary for activating a torch height control, the customer must supply an 18AWG, single pair, unshielded cable rated for 300V or greater. All work must be performed following applicable national or local codes.

WARNING

SHOCK HAZARD: Always turn off power, unplug cord from wall and wait 5 minutes before removing any power supply cover. If power supply is directly connected to a line disconnect switch, place line disconnect switch to OFF position. In the U.S., use a "lock-out / tag-out" procedure until the service or maintenance work is complete. In other countries, follow appropriate national or local safety procedures.

1. Disconnect power from the power supply.
2. Remove the screws that attach the power supply cover to the chassis. Remove the cover.
3. Feed the cable through the strain relief at the rear of power supply. See Fig. 3-16.

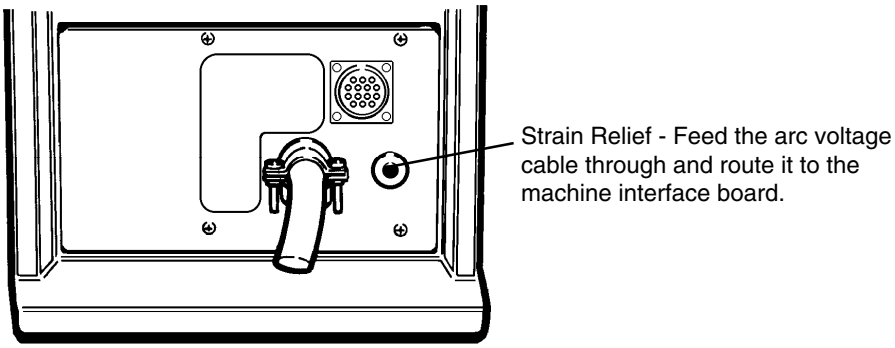

Figure 3-16 Feeding Arc Voltage Cable to Machine Interface Board (208/240/480V power supply shown)

4. Find the machine interface board on the top of the unit near the Powermax900 control board and connect the arc voltage cable as shown in Fig. 3-17.

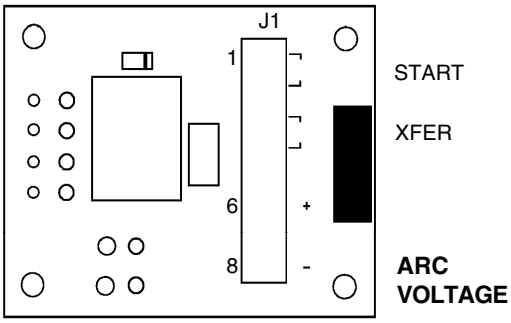

Signal:	ARC VOLTAGE (torch height control)
Type:	Output
Notes:	Full arc voltage. No voltage divider. 300VDC maximum. (Signal not available on rear panel connector.)
J1-6	+VDC
J1-8	-VDC

Figure 3-17 Machine Interface Board Connections for Arc Voltage

Section 4 OPERATION

In this section:

Controls and Indicators 4-2
Operating Instructions 4-3
Pilot Arc Controller Option 4-4
PAC125T Safety Trigger Operation 4-5
Operating Tips 4-6
Changing Consumable Parts 4-6
Cutting 4-8
Piercing 4-10
Gouging 4-11
Cut Chart - 50A Standard Consumables 4-12
Cut Chart - 35A Consumables 4-13
Common Cutting Faults 4-14

CONTROLS AND INDICATORS

- **Green POWER ON LED**
  When illuminated, indicates that all control circuits are activated, the torch safety interlock is satisfied and the system is ready for operation.

- **Green LINE VOLTAGE LED**
  When illuminated green, indicates that the AC line voltage is within proper operating limits. If disabled, (white) or if illuminated or blinking any other color, see *Basic Troubleshooting* in **Section 5**.

- **Yellow TEMP LED**
  When illuminated, indicates that the power supply temperature has exceeded operating limits.

- **Green GAS PRESSURE LED**
  When illuminated, indicates that the gas pressure is within operating limits.

- **GAS TEST Switch**
  When pushed in, allows the operator to view and adjust the pressure setting.

- **AMPS Output Adjustment Knob**
  Adjusts output current between 20 and 55 amps.

- **Pressure Regulator**
  Regulates input gas pressure to power supply.

- **Pressure Gauge**
  Indicates gas pressure at power supply.

- **ON (I)/OFF (0) Power Switch**
  Activates the power supply and its control circuits.

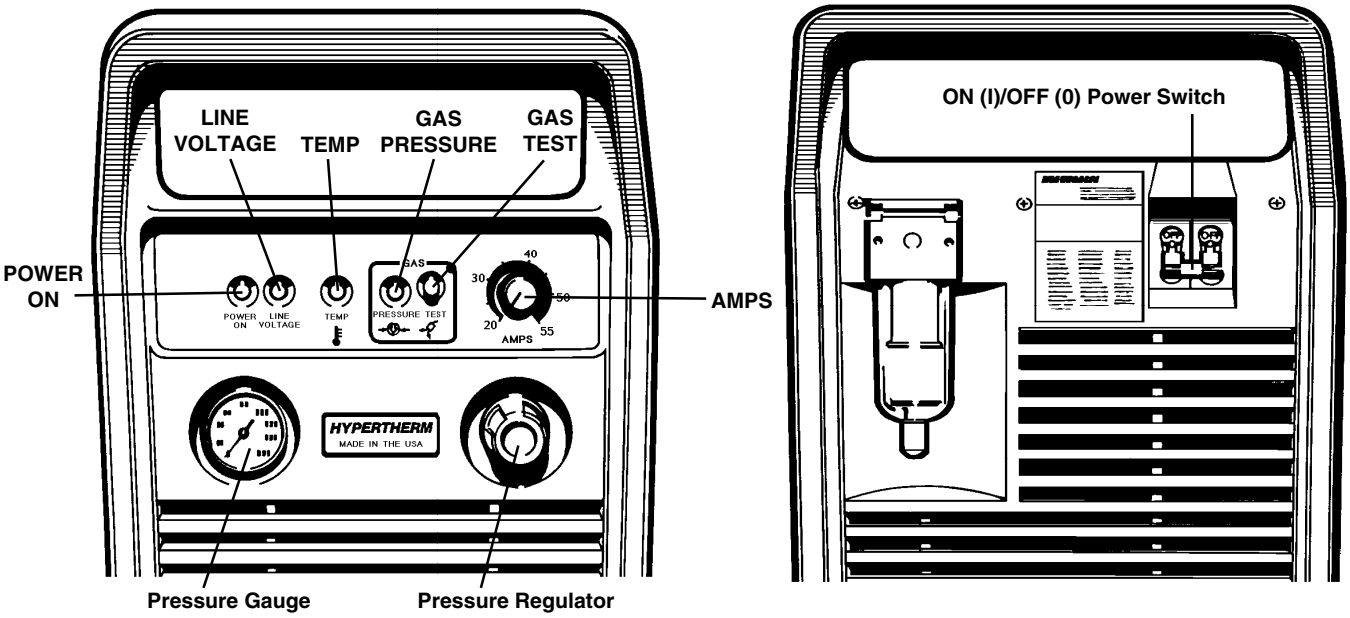

Figure 4-1 Powermax900 Controls and Indicators

OPERATING INSTRUCTIONS

WARNING

Before operating this system, read the Safety section of this manual thoroughly!

1. Ensure that the work environment and your clothing meet the safety requirements outlined in the **Safety** section.

2. Follow the instructions in the **Setup** section. Verify that the input gas supply pressure is set to 90 psi (6.2 bar).

3. At the rear of the power supply, set the power switch to the ON (I) position. The POWER ON, GAS PRESSURE and LINE VOLTAGE LEDs should illuminate green. The TEMP LED should remain extinguished.

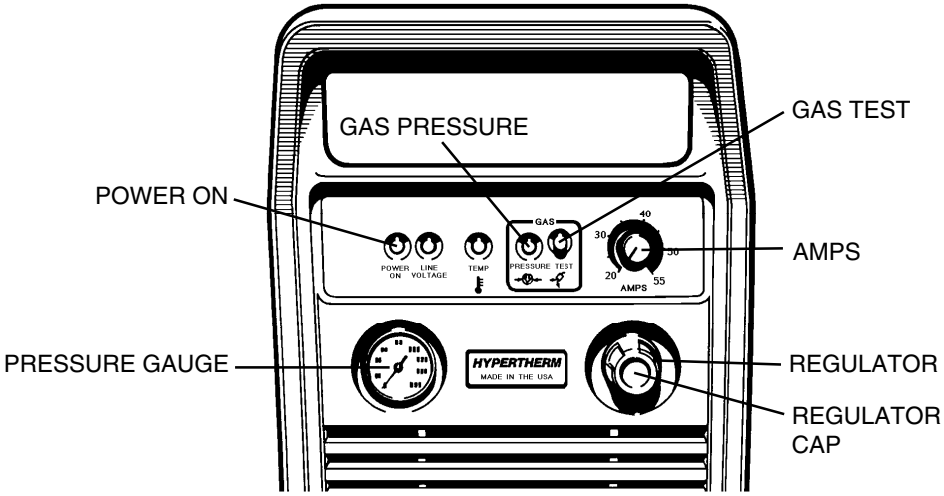

Figure 4-2 Powermax900 Operating Indicators and Adjustments

4. **Adjust the gas pressure REGULATOR to read 70 psi (4.8 bar) on the PRESSURE GAUGE:**

   - Pull the REGULATOR CAP out
   - Push the GAS TEST switch in
   - Turn the REGULATOR CAP while still holding in the GAS TEST switch
   - After adjustment to 70 psi (4.8 bar), release the GAS TEST switch
   - Push the REGULATOR CAP back in

   Note: If using 50 ft (15.2 m) torch leads, adjust pressure to 75 psi (5 bar).

5. Adjust the AMPS knob to the desired setting. See *Cut Chart* later in this section if necessary.

6. Attach the work clamp securely to the workpiece. **Do not attach it to the portion that will fall away.**

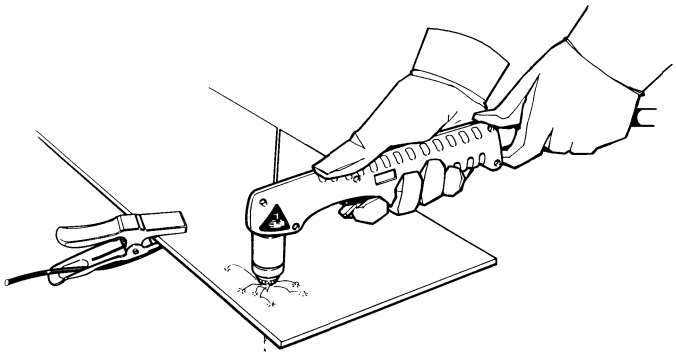

Figure 4-3 Proper Work Clamp Connection

WARNING

The PAC125 torches are instant-on torches. These torches produce a plasma arc immediately after the torch start switch closes. Always hold the hand torch away from your body as a precaution against accidental torch firing. Be aware of this hazardous potential. Failure to do so can result in serious bodily injury.

7. The Powermax900 is now ready to operate. When you are ready to cut, place the tip of the torch at the edge of the workpiece. Pull the trigger to start the arc. See *PAC125T Safety Trigger Operation* later in this section for proper operation of the safety trigger.

8. Move the torch slowly across the workpiece. The arc will transfer from the torch to the workpiece. Move the torch in the desired direction, at a speed which will ensure good cut quality. See *Cutting* instructions and the *Cut Chart* later in this section.

9. When the cut is finished, release the trigger to extinguish the arc. The arc will also extinguish when transfer to the workpiece is no longer sensed.

10. The torch will continue to release gas after the arc is extinguished. This gas postflow will continue for approximately 15 seconds but can be halted by quickly depressing and then releasing the trigger. To reinitiate the arc while in postflow, press and hold the trigger.

Pilot Arc Controller Option

In power supplies with the pilot arc controller option, the torch will return to a pilot arc after finishing a cut if the torch switch remains pressed. After a short delay, the pilot arc will then extinguish if no arc transfer is sensed. The pilot arc controller option is especially useful if you are cutting expanded metal. See *Powermax900 Field Upgrade Kits and Optional Parts* in **Section 5** for part number information.

PAC125T Safety Trigger Operation

The PAC125T safety trigger torch allows operators to safely handle the torch before and after the cut and to minimize the possibility of accidental torch firing.

The safety trigger is easy to operate. Follow the steps below.

1. **Safety On** position. In this position the trigger cannot be pulled back, and the torch cannot fire.

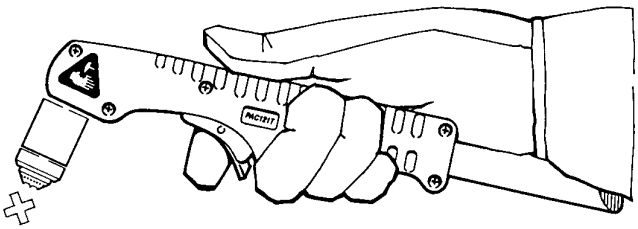

2. To fire the torch, start pushing the safety forward. Do not pull back on the trigger until the safety reaches the **Safety Off** position..

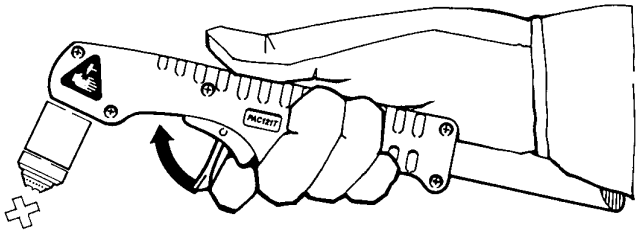

3. **Safety Off** position. In this position, the trigger can be pulled back and the torch can fire.

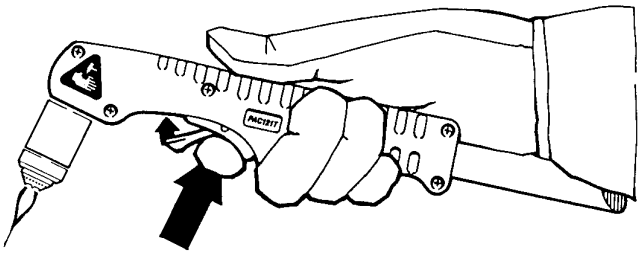

4. Release the safety to return to the **Safety On** position shown in step 1.

Figure 4-4 PAC125T Torch Safety Trigger Operation

OPERATING TIPS

Changing Consumable Parts

WARNING

SHOCK HAZARD: Always turn off power and unplug cord from wall before changing consumable parts. If power supply is directly connected to a line disconnect switch, place line disconnect switch in OFF position. Do not rely on the cap-on sensor switch to remove power. It is provided strictly for safety backup.

In the U.S., use a "lock-out / tag-out" procedure until the service or maintenance work is complete. In other countries, follow appropriate national or local safety procedures.

Changing the consumable parts requires no tools:

1. Shut off the power supply.
2. Unscrew the retaining cap and the remaining parts will come apart easily. When you unscrew the retaining cap, you will hear a click. This click is a microswitch (cap-on sensor switch) that disables the power supply if it is plugged in.
3. Check the shield (if applicable) for external signs of wear. The shield should be clean and clear of metal debris. The gas holes along the edge of the shield should not be blocked with debris. The center hole should not have any nicks or gouges, and should show no signs of arcing activity.
4. Unscrew the shield. Inspect the gas holes from the inside. The holes should be clear of metal debris. If the gas holes are blocked by debris, try to open them by pushing a pin through each one from the outside of the shield to the inside. If the shield is still good, screw it back on to the retaining cap. If it is damaged, replace it with a new one.
5. Inspect the nozzle for damage or wear. If the hole in the nozzle is worn or oval-shaped, replace the nozzle.
6. Inspect the electrode. If the center of the electrode has a pit more than 1/16 inch (1.6 mm) deep, replace it.
7. Inspect the swirl ring. It should be clean, and the holes along the side should not be plugged. If the swirl ring is damaged, replace it with a new one.
8. Inspect the O-ring on the torch. It should be lubricated and undamaged. If it is dry, lubricate it with a thin film of the lubricant provided in the consumable parts kit. If it is damaged, replace it.
9. Replace the parts as shown in Fig. 4-5. Each part fits in only one direction, so you cannot put the parts in backwards. Also, the torch will not fire if the parts are improperly assembled.
10. When the nozzle, electrode and swirl ring are properly in place, replace the retaining cap and shield (or deflector). When the retaining cap is tightened, the microswitch will click, indicating that the torch is again ready for operation. Plug the power supply back in.

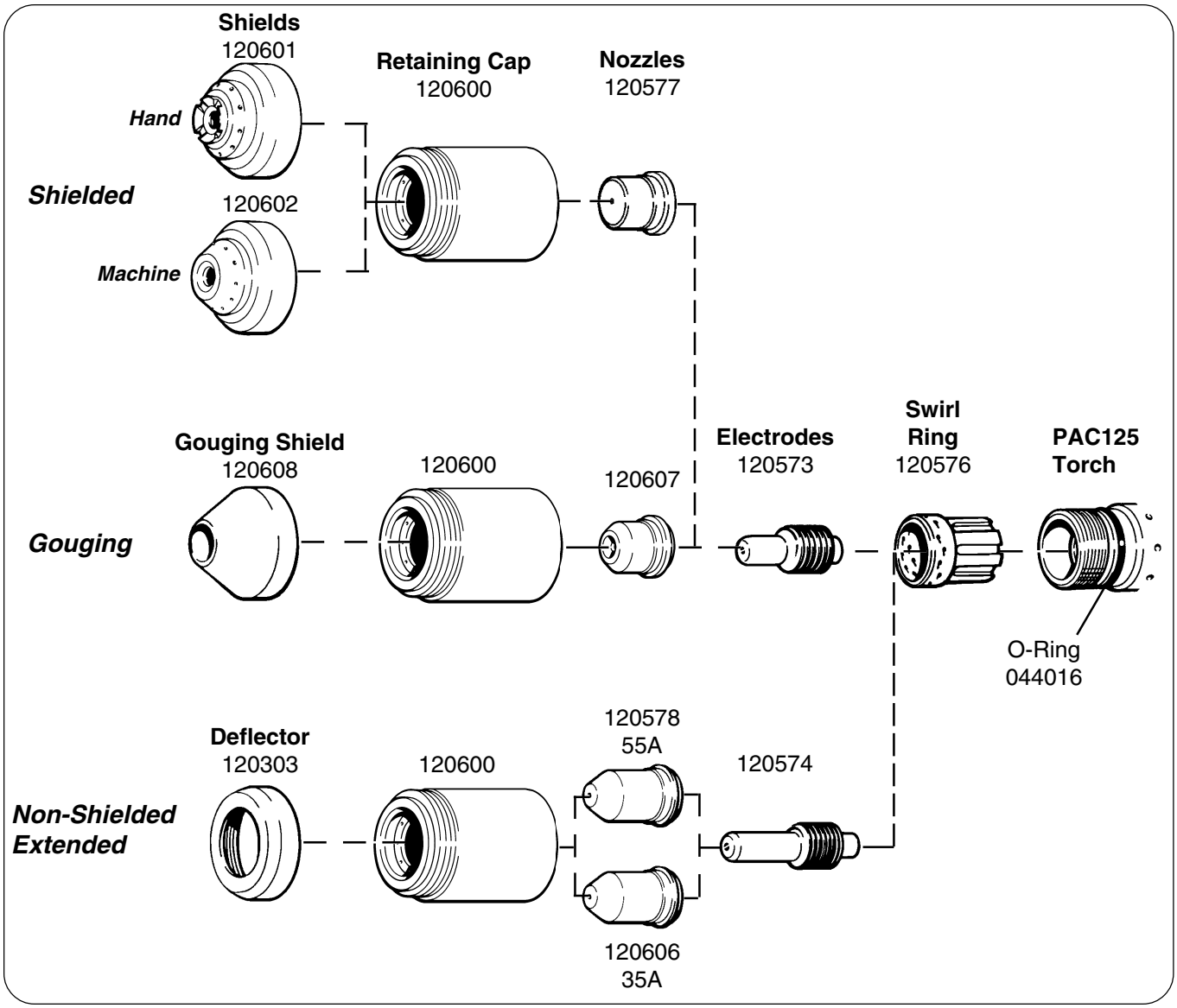

Figure 4-5 Consumables

Description of Consumables

- **Shielded** Shielded nozzle allows the torch tip to be dragged directly on the workpiece.
- **Gouging** For metal removal without cutting. Use for weld removal or setup. Nozzle shield may be placed directly on the workpiece.
- **Non-Shielded Extended** For increased visibility and access for special applications. The nozzle is not shielded. Maintain a torch-to-work distance of approximately 1/8" (3 mm) when cutting above 40A to avoid accelerated consumable parts wear. *In the European community, do not use the non-shielded extended consumables with the hand torch.*

Cutting

- Do not fire the pilot arc into the air needlessly—doing so causes a significant reduction of the nozzle and electrode life.
- Start cutting from the edge of the workpiece (Fig. 4-6).
- When cutting, make sure that the sparks are coming out of the bottom of the workpiece. If they are spraying on top of the workpiece, you are moving the torch too fast, or you do not have sufficient power to fully penetrate the workpiece.
- Hold the torch lightly on the metal or just off the metal. Holding the torch firmly to the workpiece causes the shield or nozzle to stick and makes smooth cutting difficult. The arc transfers to the workpiece once the torch is within 1/4 inch (6 mm) of the workpiece.
- Pulling the torch through the cut is easier than pushing it.
- Hold the torch nozzle at a vertical position and watch the arc as it cuts along the line (Fig. 4-8). By lightly dragging the shield or nozzle on the workpiece, you can maintain a steady cut. For straight-line cuts, use any straight edge as a guide.
- When cutting thin material, reduce the amps until you get the best quality cut.
- To cut circles, use a template or a radius cutter attachment (Fig. 4-7).

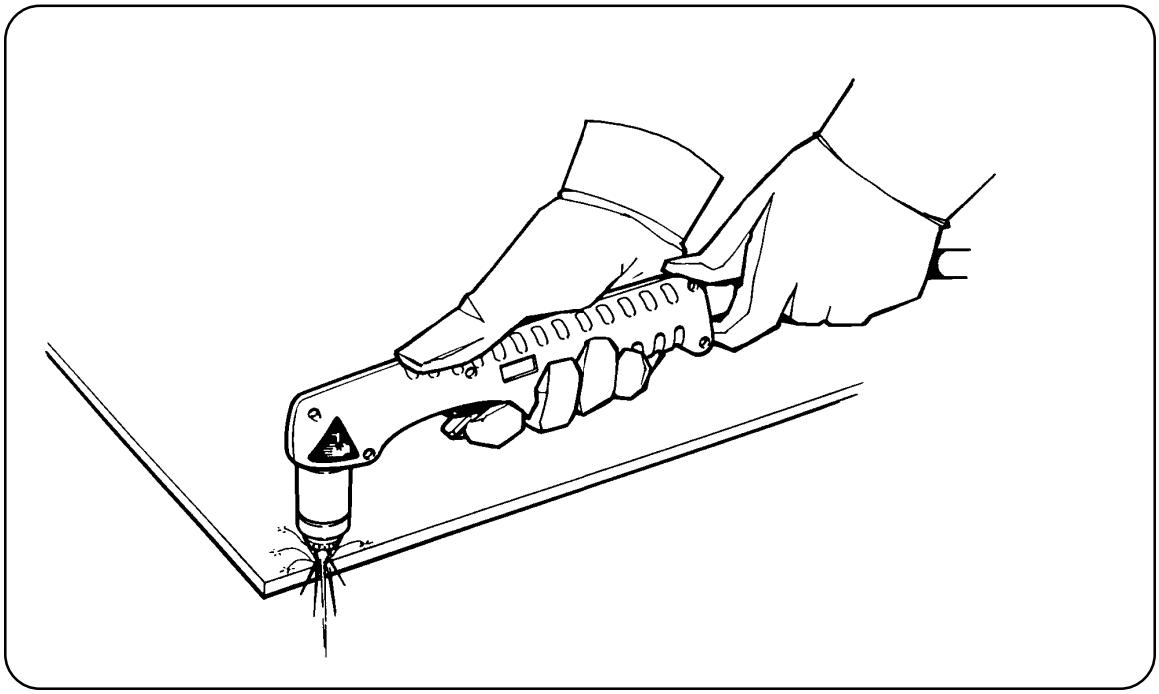

Figure 4-6 Starting a Cut

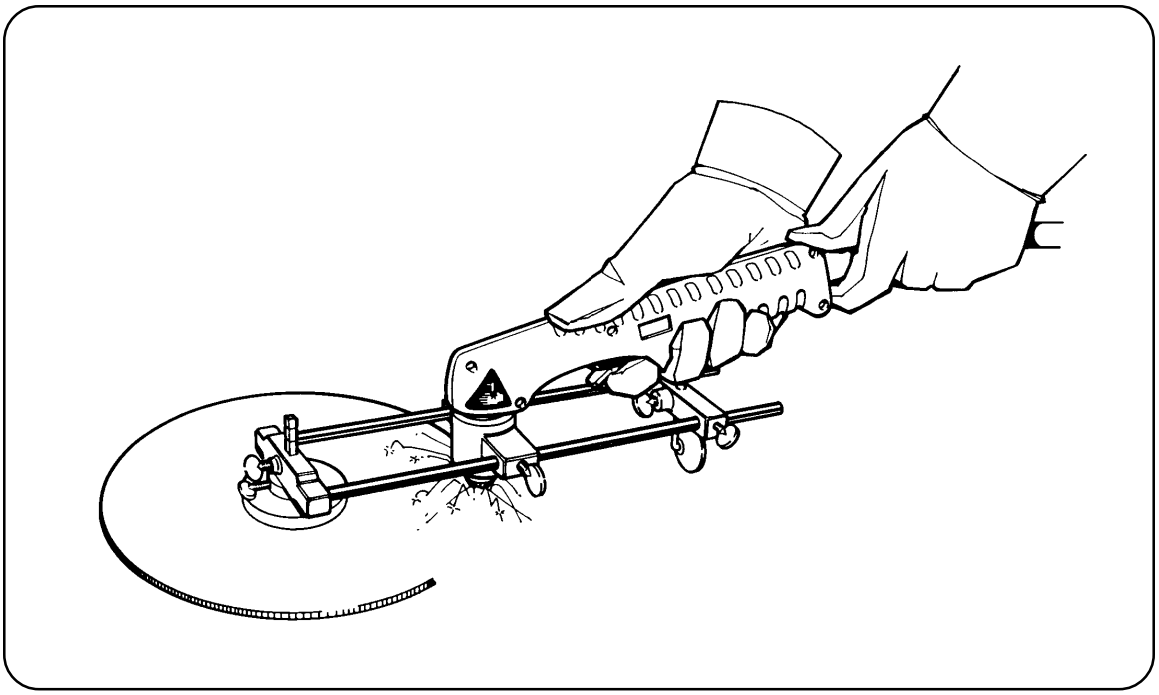

Figure 4-7 Cutting a Circle

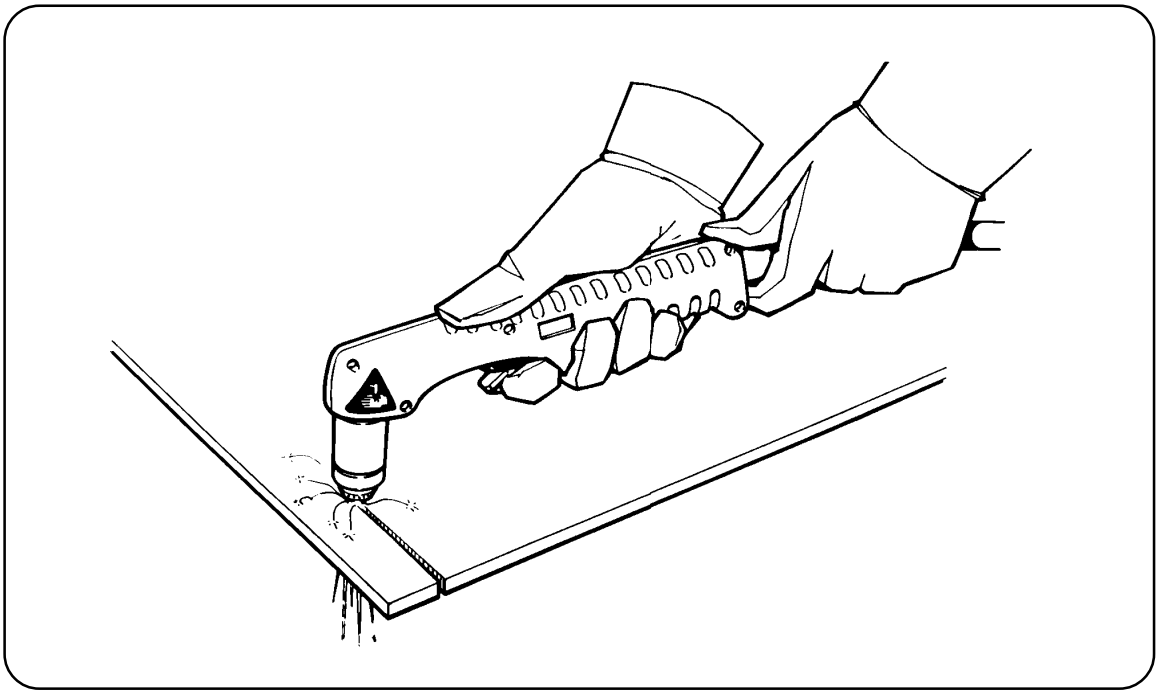

Figure 4-8 Dragging the Torch

Piercing

- Hold the torch so that the nozzle is approximately 1/16 inch (1.6 mm) away from the workpiece before firing the torch. This method maximizes the life of the nozzle.

- Hold the torch at an angle to the workpiece away from yourself, then slowly rotate it to an upright position. (This is particularly important when cutting thicker material.) Make sure that the torch is pointed away from you and the people around you to avoid any danger from sparks and hot metal (Fig. 4-9). This method permits the hot metal to escape to one side rather than splashing back against the nozzle. This will protect the operator from the sparks and extend the life of the nozzle.

- When the pierce is complete, proceed with the cut.

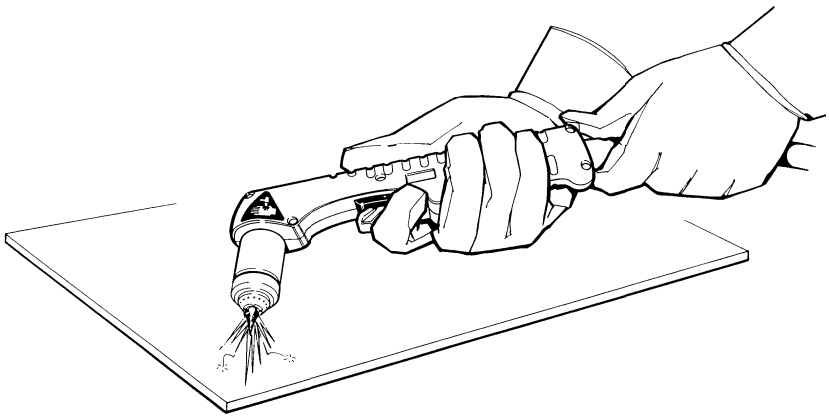

1. Tilt the torch and press the start button.

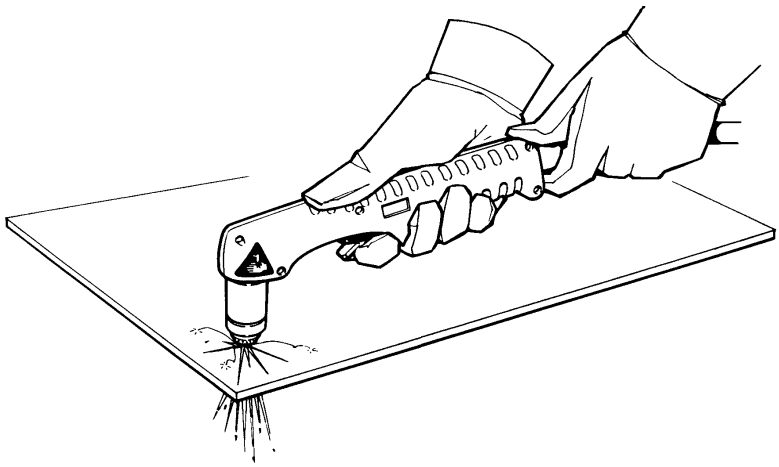

2. Rotate the torch to an upright position.

Figure 4-9 Piercing

Gouging

The Powermax900 can be used for gouging mild steel by using the optional gouging nozzle and gouging shield. To gouge:

- Always wear full protection:
  - A welding helmet with at least a #8 lens shade
  - Welding gloves
  - A welding jacket

The arc is fully exposed and will cause serious burns if the skin is not covered.

- Install the gouging nozzle and shield just as you would install a standard cutting nozzle and shield. See *Changing Consumable Parts* earlier in this section.

- Adjust the air pressure to 50–55 psi (3.4–3.8 bar) with air flowing from the torch. Note that this is lower than the cutting pressure.

- Start a transferred arc by holding the torch pependicular to the workpiece. As soon as the arc transfers, tilt the torch approximately 45° from the surface to be gouged and feed into the gouge. Multiple passes or "wearing" may be necessary to gouge wider and deeper sections. See Fig. 4-10.

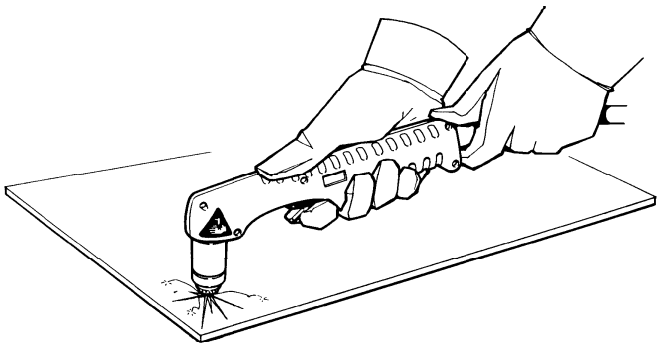

1. Hold torch perpendicular to the workpiece to start transferred arc.

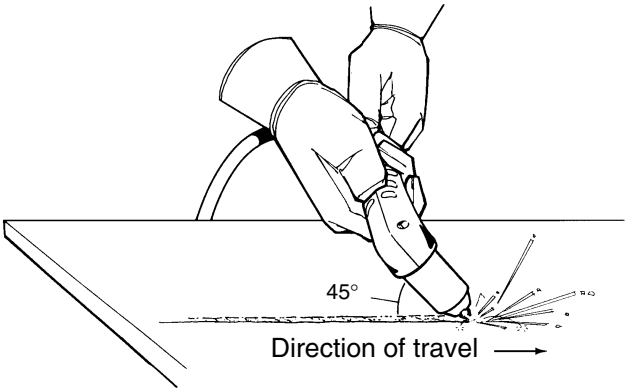

2. Feed into the gouge.

Figure 4-10 Gouging

CUT CHART - 55A STANDARD CONSUMABLES

The following recommended settings are for mechanized cutting at 55 amps. Torch-to-work distance for the following cut charts is 1/16 inch (1.6 mm) for all cuts.

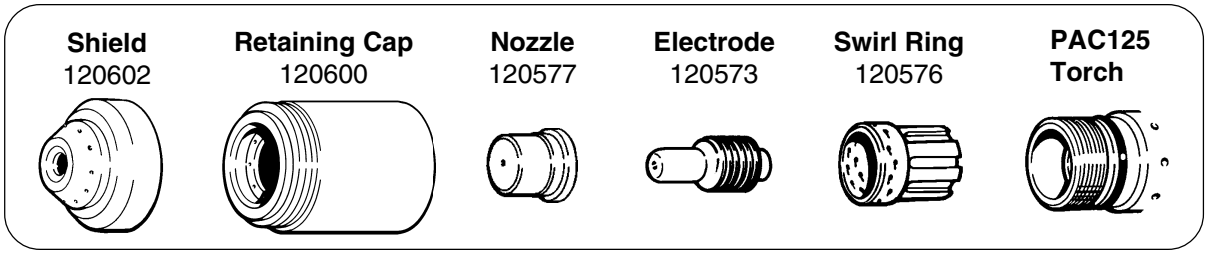

Material Thickness (ga. or in.)	(mm)	Material	Arc Current (A)	Arc Voltage (V)	Recommended Travel Speed* (ipm)	(mm/min)	Pierce Delay (S)
16 ga.	1.5	Mild Steel	55	116	330	8380	n/a
10 ga.	3.4	Mild Steel	55	119	160	4060	0.5
1/4"	6.4	Mild Steel	55	120	75	1900	1.0
3/8"	9.5	Mild Steel	55	125	35	890	2.0
1/16"	1.6	Stainless Steel	55	117	315	8000	n/a
1/8"	3.2	Stainless Steel	55	118	140	3560	0.5
1/4"	6.4	Stainless Steel	55	121	55	1400	1.0
3/8"	9.5	Stainless Steel	55	125	28	710	2.0
1/16"	1.6	Aluminum	55	117	550	13970	n/a
1/8"	3.2	Aluminum	55	119	280	7110	0.5
1/4"	6.4	Aluminum	55	125	135	3430	1.0
3/8"	9.5	Aluminum	55	129	55	1400	2.0

* Recommended travel speeds are 10–20% slower than maximum. These slower speeds will produce optimum cut quality.

WARNING

The voltage between the tip of the torch and the workpiece will exceed 113VDC if shielded consumable parts are not installed in the torch. If using the 400V CE power supply, the hand torch must be operated with shielded parts to maintain the S mark and CE low-voltage compliance for hand held applications. See Section 5: *Consumable Parts - For CE Compliance* **for a list of CE consumable parts. This requirement does not apply to machine torch applications.**

CUT CHART - 35A CONSUMABLES

Use 35 amp consumables on thin material to obtain maximum consumable life, a narrow kerf width and to minimize the heat-affected zone. The following recommended settings are for mechanized cutting. Torch-to-work distance is 1/16 inch (1.6 mm) for all cuts.

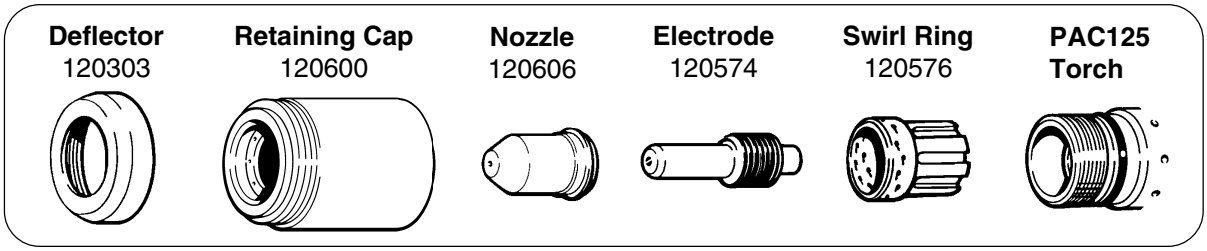

Material Thickness (ga. or in.)	(mm)	Material	Arc Current (A)	Arc Voltage (V)	Recommended Travel Speed* (ipm)	(mm/min)	Pierce Delay (S)
26 ga.	0.5	Mild/Galvanized Steel	22	107	490	12450	n/a
20 ga.	0.8	Mild/Galvanized Steel	22	120	250	6350	n/a
18 ga.	1.6	Mild/Galvanized Steel	22	120	190	4830	n/a
14 ga.	2.0	Mild Steel	35	117	220	5590	n/a
10 ga.	3.4	Mild Steel	35	120	110	2790	0.5
26 ga.	0.5	Stainless Steel	22	110	430	10920	n/a
20 ga.	0.8	Stainless Steel	22	119	140	3560	n/a
1/16"	1.5	Stainless Steel	35	118	240	6100	n/a
1/8"	3.2	Stainless Steel	35	120	75	1900	0.5
1/32"	0.8	Aluminum	22	106	450	11430	n/a
1/16"	1.5	Aluminum	35	114	430	10920	n/a
1/8"	3.2	Aluminum	35	115	165	4190	0.5

* Recommended travel speeds are 10–20% slower than maximum. These slower speeds will produce optimum cut quality.

Cut Chart Notes:

The Cut Charts on these pages are optimized to provide the best cut angle, least dross and best cut surface finish. **Remember that cut charts are intended to provide a good starting point for each different cutting assignment. Every cutting system requires "fine-tuning" for each cutting application to the materials on site in order to obtain optimum cut quality.**

Cut Chart Notes (continued):

- Maximum recommended mechanized cutting capacity: 1/2" (13 mm).
- See page 4-7 or **Section 5** for additional consumable parts.
- Compressed air or nitrogen must be available to the power supply filter/pressure regulator at a flow rate of 360 scfh/6 scfm (170 l/min) at a pressure of 90 psi (6.2 bar). The dynamic (flowing) pressure when operating is 70 psi (4.8 bar). If torch leads are 50 ft (15.2 m), the dynamic pressure when operating is 75 psi (5 bar). If the pressure to the power supply falls below 40 psi (2.8 bar), the torch will go out.
- After several minutes of running, the torch retaining cap may become hot to touch. To cool it, push in and hold the GAS TEST switch until the cap cools down.
- The duty cycle, or the amount of time the pilot or plasma arc can remain “on” in minutes within a 10-minute period, is affected by many factors. When the current is set at 55 amps, the Powermax900 has a 50% duty cycle at a temperature of 40° C (104° F). At these conditions, the plasma arc can remain on 5 minutes out of every 10 minutes without causing the temperature sensors to disable the unit. The duty cycle increases to 100% at a temperature of 40° C (104° F) when the current is set below 39 amps.
- To avoid performance deterioration of the Powermax900, input voltage should be within 10% of the specified system line voltage setting.

COMMON CUTTING FAULTS

- The workpiece is not totally penetrated. Causes can be:
  - The current is too low.
  - The cut speed is too high.
  - The torch parts are worn.
  - The metal being cut is too thick.
  - The work clamp is not properly attached to the workpiece.
- Dross forms on the bottom of the cut. Causes can be:
  - The cutting speed is too slow.
  - The torch parts are worn.
  - The metal being cut is too thick.
  - The current is too low.

Section 5 MAINTENANCE/PARTS

In this section:

Introduction 5-2
Routine Maintenance 5-2
Bowl Draining and Filter Element Cleaning 5-2
Removal, Cleaning and Replacement of the Cooling Air Filter 5-3
Basic Troubleshooting 5-4
Technical Questions 5-7
Parts 5-8
Consumable Parts Kits 5-8
Hand Consumable Parts Kit 5-8
Machine Consumable Parts Kit 5-8
Consumable Parts Kit - CE 5-8
Consumable Configurations 5-9
PAC125T Torch Assembly 5-10
PAC125M Torch Assembly 5-11
Powermax900 Field Upgrade Kits and Optional Parts 5-12
Power Supplies - 208/240/480V 5-12
Power Supplies - 200/230/400V 5-12
Power Supplies - 400V CE 5-13

INTRODUCTION

This section contains information for simple maintenance and troubleshooting. A brief parts list is also included. For higher level troubleshooting, see *Technical Questions* later in this section.

ROUTINE MAINTENANCE

Bowl Draining and Filter Element Cleaning

Moisture coming out of the torch can cause the torch to sputter and hiss. If there is moisture, purge the lines. If moisture builds up in the bowl of the filter at the rear of the power supply, drain the bowl and clean the filter element:

1. Shut off the gas supply and disconnect the gas supply hose from the filter assembly before proceeding.

2. Remove the cap at the bottom of the filter bowl and turn the knurled drain valve to the right to release water from the bowl.

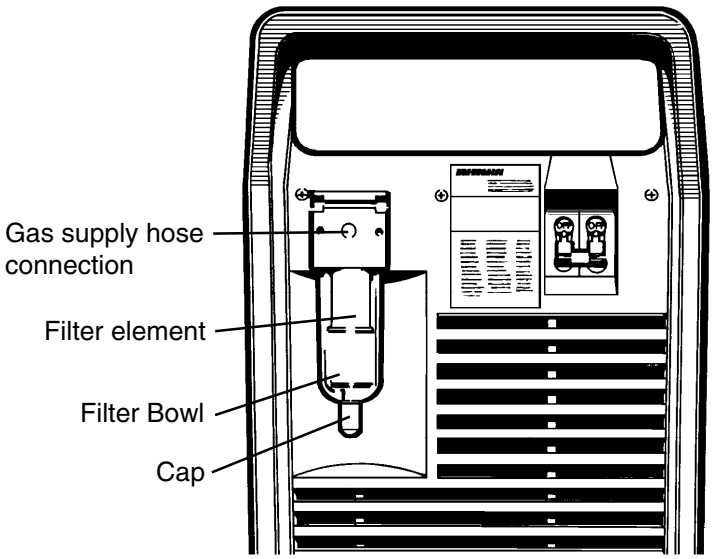

Figure 5-1 Filter Assembly

3. Unscrew the filter bowl.

4. Unscrew the filter element. See *Powermax900 Field Upgrade Kits and Optional Parts* later in this section for part number information.

5. Clean the filter element with alcohol, then blow it out with air from the inside of the filter element. Clean the bowl with household soap only.

6. Replace the filter element and filter bowl.

7. Reconnect the gas supply hose.

Removal, Cleaning and Replacement of the Cooling Air Filter

Powermax900 systems are normally shipped without air filters. If your Powermax900 has the air filter option, the filter will need periodic cleaning. Excessively dirty or dusty environments can block the cooling air filter (if installed) and cause the power supply to overheat and shut down.

WARNING

SHOCK HAZARD: Always turn off power, unplug cord from wall and wait 5 minutes before removing any power supply cover. If power supply is directly connected to a line disconnect switch, place line disconnect switch to OFF position. In the U.S., use a "lock-out / tag-out" procedure until the service or maintenance work is complete. In other countries, follow appropriate local or national safety procedures.

1. **Turn the Powermax900 power switch to the OFF (0) position**, unplug the power cable from the wall receptacle and disconnect the gas supply.

2. Remove the screws that secure the power supply cover to the chassis.

3. Remove the cover, and remove the cooling air filter from the clips by sliding the filter to the left and then up - Fig. 5-2. See *Powermax900 Field Upgrade Kits and Optional Parts* later in this section for part number information.

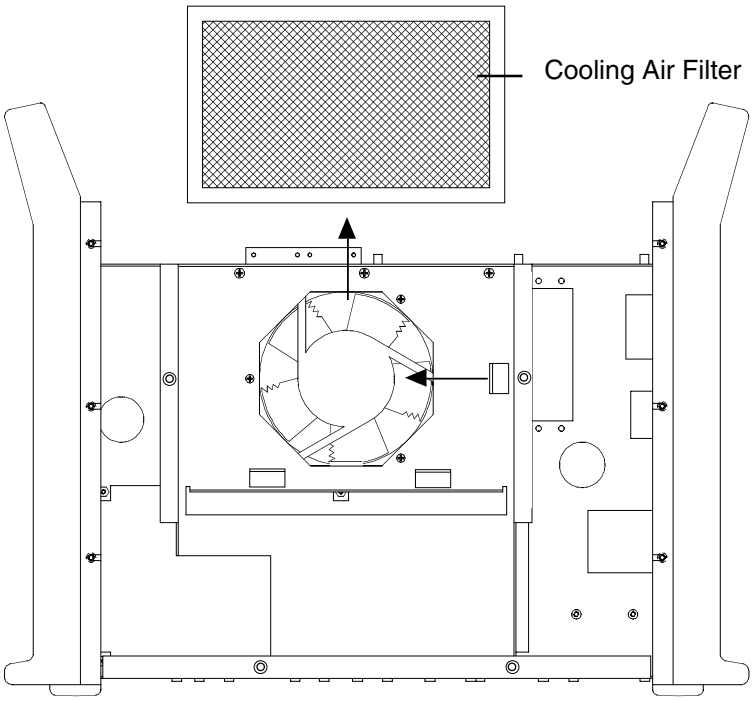

Figure 5-2 Air Filter Removal

4. Clean the air filter with either soap and water or with low-pressure compressed air.

5. Replace the dry filter in the power unit with the wire mesh facing the fan.

6. Replace and re-fasten the power supply cover with the existing screws.

BASIC TROUBLESHOOTING

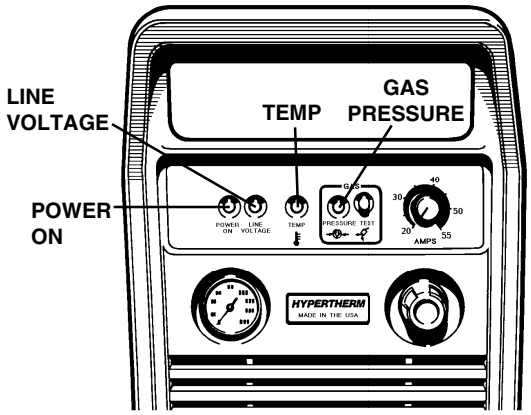

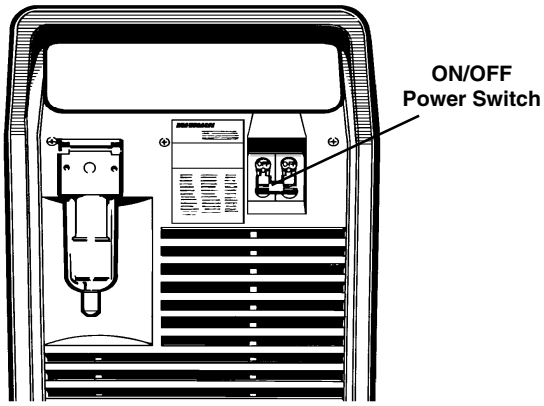

Problem	*Cause* / Solution
1. The ON/OFF power switch is set to I (ON), but the fan does not operate and the POWER ON LED is not illuminated.	***1.1 The power cord is not plugged into the power receptacle.*** Plug in the power supply.
	1.2 The disconnect power switch is not set to ON or there is no power available to the disconnect power switch box. Turn the power ON at the main power panel or at the disconnect power switch box.
	1.3 A fuse is blown. See **Appendix A** *Changing Fuses*.
2. The POWER ON LED is illuminated but the GAS PRESSURE LED is not illuminated.	***2.1 The gas supply is turned OFF or not connected to the power supply.*** Verify that the gas is turned on and connected to the power supply.
	2.2 Gas pressure is too low. Set gas supply pressure to 90 psi (6.2 bar). Verify that there are no leaks in the gas supply line.
3a. The POWER ON LED is illuminated, the LINE VOLTAGE LED is disabled (white) and the torch is disabled.	***3a.1 Power supply voltage links are incorrect.*** See voltage configuration settings in **Section 3**.
	3a.2 Line voltage is extremely low. The following table represents the operating range of the Powermax900 power supplies. Have an electrical technician check incoming power.

Problem	*Cause* / Solution
	Note: To avoid performance deterioration of the Powermax900, input voltage should be within 10% of the specified system line voltage setting.

Lower Limit	System Line Voltage	Upper Limit
164VAC	200VAC	235VAC
170VAC	208VAC	239VAC
189VAC	230VAC	270VAC
197VAC	240VAC	276VAC
328VAC	400VAC	470VAC
393VAC	480VAC	552VAC
510VAC	600VAC	690VAC

3b. The POWER ON LED is illuminated, the LINE VOLTAGE LED is blinking yellow and the torch is disabled.

3b.1 Power supply voltage links are incorrect.
See voltage configuration settings in **Section 3**.

3b.2 Line voltage is too low.
Line voltage is less than 20% of nominal. Have an electrical technician check incoming power.

3c. The POWER ON LED is illuminated, the LINE VOLTAGE LED is continuous yellow and the torch is working.

3c.1 Power supply voltage links are incorrect.
See voltage configuration settings in **Section 3**.

3c.2 Line voltage is too low.
Line voltage is between 15% and 20% below nominal. Have an electrical technician check incoming power.

3d. The LINE VOLTAGE LED is continuous red, power supply is disabled.

3d.1 Line voltage is too high.
LIne voltage is greater than 15% of nominal. Have an electrical technician check incoming power.

3d.2 Torch cap is not engaging microswitch.
Verify that the torch consumables are installed correctly and that a "click" is heard when the retaining cap is screwed down.

3d.3 Trip circuit is defective.
See *Technical Questions* on page 5-7.

3d.4 There is a control board failure.
Turn power supply off and then on. If problem persists, see *Technical Questions* on page 5-7.

Problem	*Cause* / Solution
3e. The LINE VOLTAGE LED is blinking red, and the power supply is disabled.	***3e.1 There is an internal torch failure.*** Replace the torch.
4. The power supply shuts off after it turns on.	***4.1 The torch is not connected to the power supply.*** Connect the torch to the power supply.
	4.2 The retaining cap is loose. Tighten the retaining cap.
	4.3 The torch is defective. See *Technical Questions* on page 5-7.
	4.4 Power supply voltage links are incorrect. See voltage configuration settings in **Section 3**.
	4.5 Line voltage is too high. See table on previous page.
5. The fuse on the incoming power line fails during cutting.	***5.1 The power supply has exceeded the capacity of the fuse.*** Check the fuse for proper amperage rating. See *Power Requirements* in **Section 3**. Check power cable for a short circuit or loose connection.
6. The POWER ON LED is illuminated, the TEMP LED stays illuminated and the torch will not fire.	***6.1 One of the internal thermostat switches has opened due to overheating.*** Leave power supply on to allow fan to cool power supply down, then shut down and restart. Clean internal air filter (if installed). See *Removal, Cleaning and Replacement of the Cooling Air Filter* earlier in this section.
7. The arc does not transfer.	***7.1 The work clamp is not connected to the workpiece or the work clamp is broken.*** Connect or repair the work clamp.
	7.2 Work clamp is not making good metal to metal contact Clean area where clamp contacts the workpiece.
	7.2 The workpiece is too far away from the torch. Move the torch head closer (1/8 - 1/4" (3 - 6 mm) maximum distance) to the workpiece and start the torch again.

Problem	*Cause* / Solution
8. The arc blows out, but re-ignites when the torch switch is depressed.	***8.1 There are faulty consumable parts.*** Inspect and change the consumable parts, if necessary. See *Operating Tips* in **Section 4**.
	8.2 The gas pressure is incorrect. Adjust the gas pressure. Incoming gas pressure is 90 psi (6.2 bar) at a flow of 360 scfh (170 l/m). Pressure at unit in TEST mode is 70 psi (4.8 bar) for lead length of 25 feet (7.6 m) and 75 psi (5 bar) for lead length of 50 feet (15.2 m). See *Operating Instructions* in **Section 4** to adjust gas pressure, if necessary.
	8.3 The gas filter at the rear of the supply contains excessive moisture. Drain the filter bowl and clean the filter. See *Routine Maintenance* earlier in this section.
9. The arc sputters and hisses.	***9.1 The gas filter at the rear of the supply contains excessive moisture.*** Drain filter bowl and clean filter. See *Routine Maintenance* earlier in this section.
10. Cut quality is not good.	***10.1 Power supply voltage links are incorrect.*** See voltage configuration settings in **Section 3**.
	10.2 Consumables are worn. See *Operating Tips* in **Section 4.**

TECHNICAL QUESTIONS

If you are unable to fix the problem with your Powermax900 by following this basic troubleshooting guide or if you need further assistance:

1. Call your distributor or an authorized Hypertherm repair facility.
2. Call the nearest Hypertherm office listed in the front of this manual.
3. See the Powermax900 service manual for wiring diagrams, higher-level troubleshooting and more parts list information.

PARTS

Consumable Parts Kits

Hand Consumable Parts Kit (128287)	
Part Number	**Description (Quantity)**
001285	Box, Consumable Parts (1)
120573	Electrode (3)
120574	Electrode, Extended (1)
120577	Nozzle, 55A, Shielded (3)
120578	Nozzle, Pipe Saddle, Extended (1)
120607	Nozzle, Gouging (1)
120601	Shield, 55A (1)
120608	Shield, Gouging (1)
120303	Deflector (1)
044016	O-Ring (3)
015152	Nipple, 1/8 NPT,QDisc, Steel (1)
015604	Reducer, 1/4 FPT X 1/8 NPT, Brass (1)
027055	Lubricant, Silicone 1/4 Oz Tube (1)

Machine Consumable Parts Kit (128288)	
Part Number	**Description (Quantity)**
001285	Box, Consumable Parts (1)
120573	Electrode (3)
120574	Electrode, Extended (3)
120577	Nozzle, 55A, Shielded (3)
120606	Nozzle, 35A, Extended (3)
120602	Shield, PAC125M Machine Torch (1)
120303	Deflector (1)
044016	O-Ring (3)
015152	Nipple, 1/8 NPT, QDisc, Steel (1)
015604	Reducer, 1/4 FPT X 1/8 NPT, Brass (1)
027055	Lubricant, Silicone 1/4 Oz Tube (1)

Consumable Parts Kit - CE (128289)	
Part Number	**Description (Quantity)**
001285	Box, Consumable Parts (1)
120573	Electrode, Air (3)
120577	Nozzle, 55A, Shielded (3)
120607	Nozzle, Gouging (1)
120608	Shield, Gouging (1)
120601	Shield, 55A (1)
044016	O-Ring (3)
015152	Nipple, 1/8 NPT, QDisc, Steel (1)
015301	Adapter, 1/8 NPT to 1/4 Hose (1)
027055	Lubricant, Silicone 1/4 Oz Tube (1)

Consumable Configurations

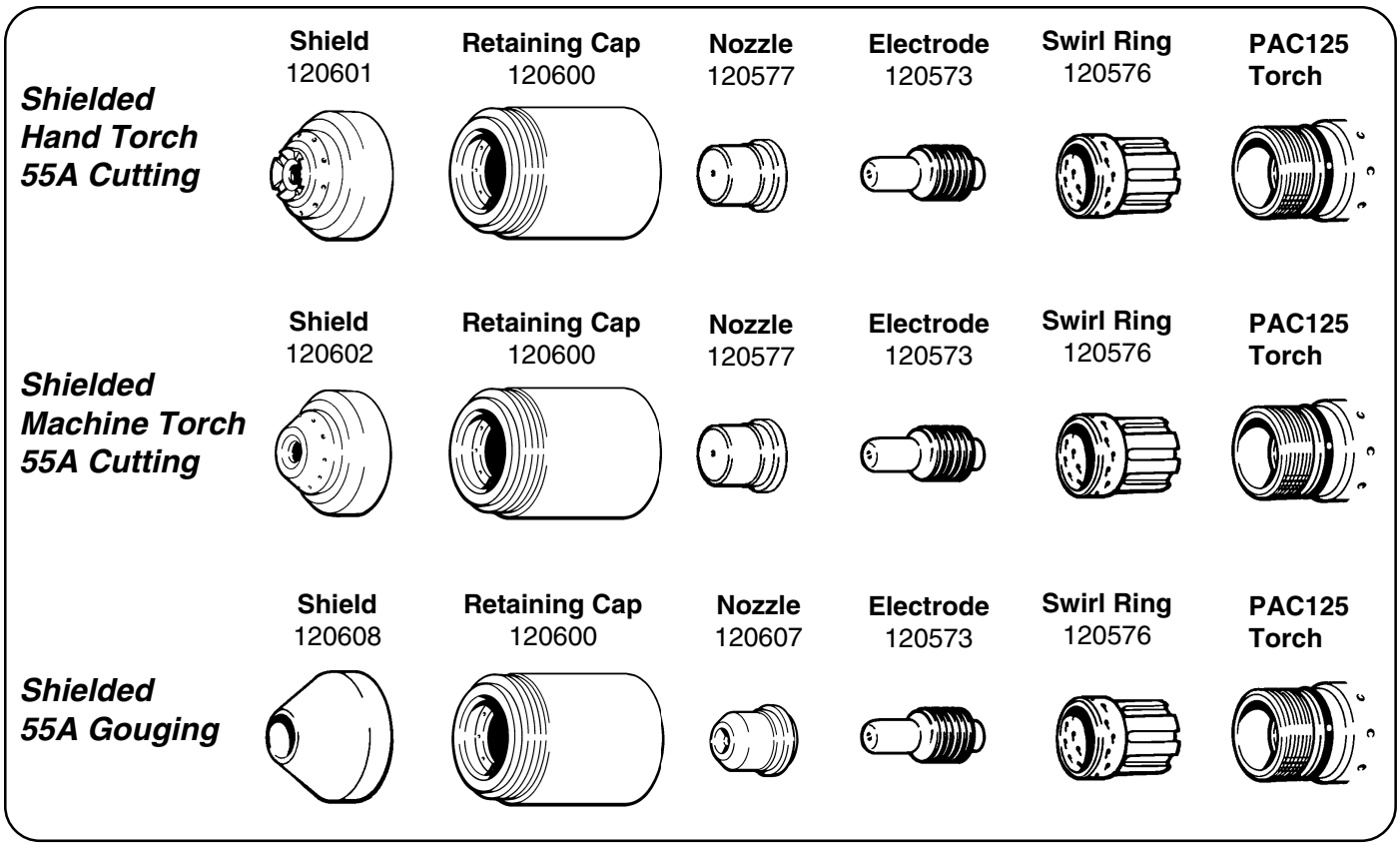

Figure 5-3 Shielded Consumable Configurations

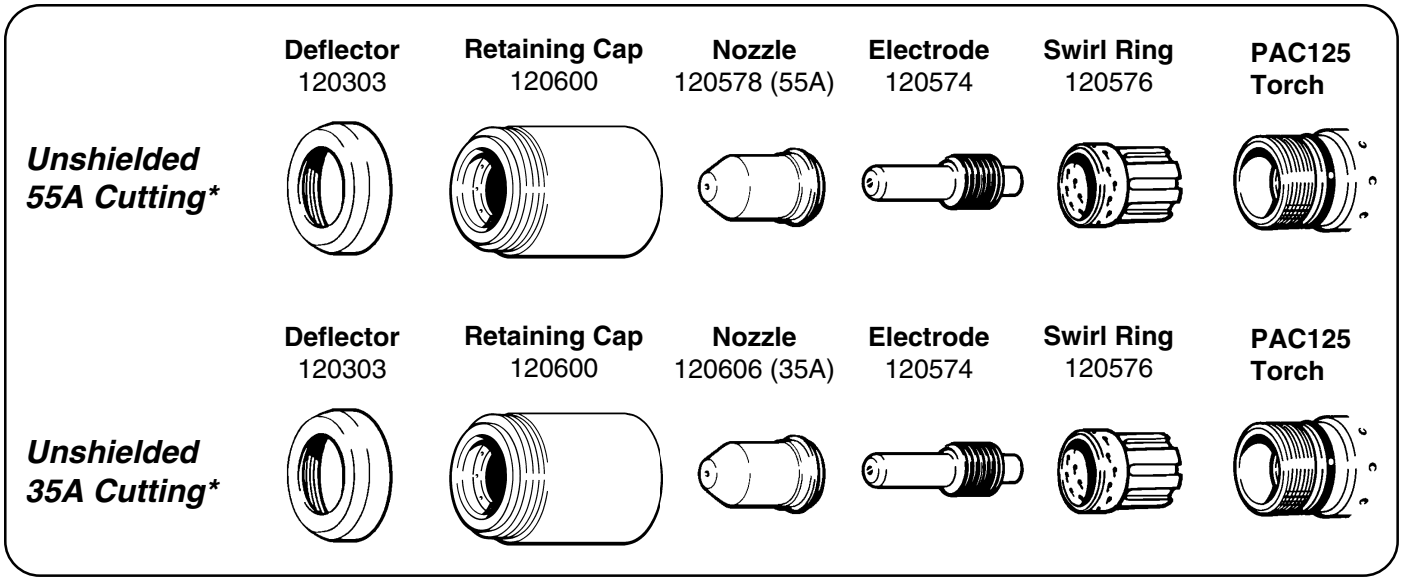

Figure 5-4 Unshielded Consumable Configurations

* In CE countries, use unshielded consumables only in machine-torch applications.

PAC125T Torch Assembly and 25 ft (7.6 m) Lead - 083066
PAC125T Torch Assembly and 50 ft (15.2 m) Lead - 083067

Part Number	Description
001288	Handle, PAC121/125T
002244	Safety Trigger, PAC121/125T
128284	Kit: Switch Repair
120573	Electrode, Air
120576	Ring, Swirl
027254	Trigger Spring, PAC121/125T
004764	Ring, Gutcha
075339	Screws, P/S, # 4 X 1/2, PH, RND, S/B
120577	Nozzle: PAC125 55A Shield
120601	Shield: PAC121T
120600	Cap, Retaining
120570	Torch Main Body with Switch, PAC125T
044016	O-Ring: BUNA 90 Duro .614X.070
129352	Torch Lead, 25 ft (7.6 m)
129353	Torch Lead, 50 ft (15.2 m)
044009	Quick Disconnect O-Ring (not shown)

* Used only in 083066
** Used only in 083067
Note: See page 5-8 or 5-9 for detail of consumable parts

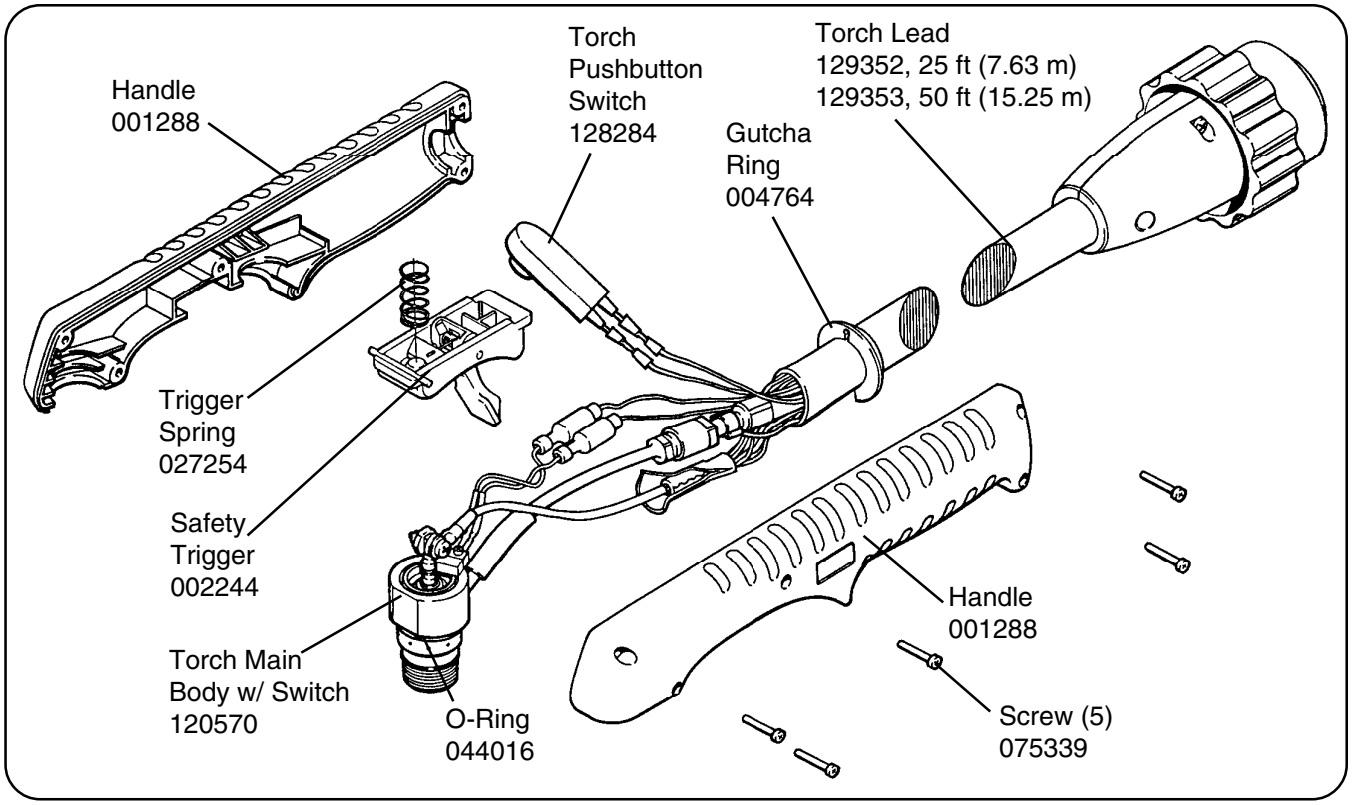

Figure 5-5 PAC125T Torch Assembly and Leads

PAC125M Torch Assembly and 14 ft (4.3 m) Lead - 083069 w/pigtail, 083073 no pigtail
PAC125M Torch Assembly and 25 ft (7.6 m) Lead - 083068 w/pigtail, 083072 no pigtail
PAC125M Torch Assembly and 35 ft (10.6 m) Lead - 083070 w/pigtail, 083074 no pigtail
PAC125M Torch Assembly and 50 ft (15.2 m) Lead - 083071 w/pigtail, 083075 no pigtail

Part Number	Description
120573	Electrode, Air
120576	Ring, Swirl
120613	Sleeve, Machine Torch, PAC125M
020620	Sleeve, Torch Position, PAC121/125M
129339	Torch Lead w/pigtail, 14 ft (4.3 m)
129338	Torch Lead w/pigtail, 25 ft (7.6 m)
129340	Torch Lead w/pigtail, 35 ft (10.6 m)
129341	Torch Lead w/pigtail, 50 ft (15.2 m)
129343	Torch Lead, no pigtail, 14 ft (4.3 m)
129342	Torch Lead, no pigtail, 25 ft (7.6 m)
129344	Torch Lead, no pigtail, 35 ft (10.6 m)
129345	Torch Lead, no pigtail, 50 ft (15.2 m)
044009	Quick Disconnect O-Ring (not shown)
027599	Snap Ring
120577	Nozzle: PAC125 55A Shield
120602	Shield: PAC121M Machine Torch
120600	Cap, Retaining
120583	Torch Main Body w/ Switch, PAC125M
044016	O-Ring: BUNA 90 Duro .614X.070

Note: See page 5-8 or 5-9 for detail of consumable parts

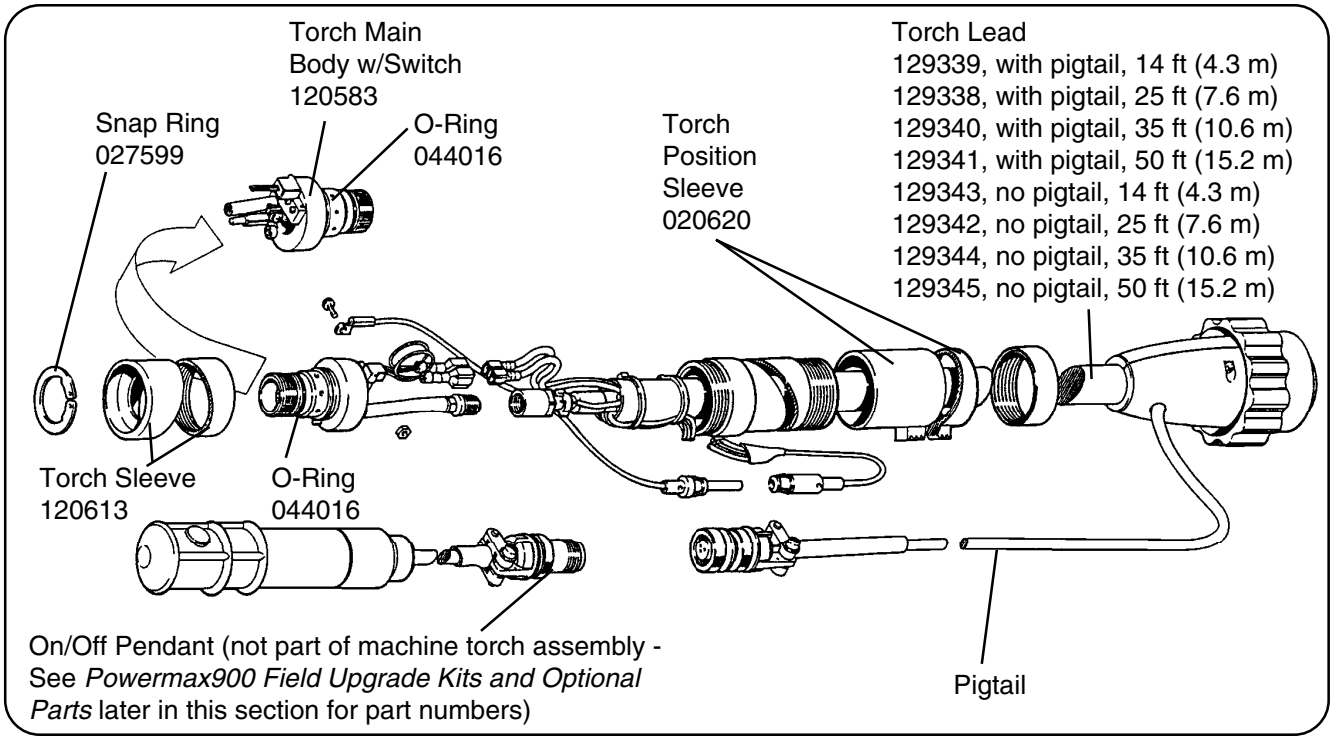

Figure 5-6 PAC125M Torch Assembly and Leads

Powermax900 Field Upgrade Kits and Optional Parts

Part Number	Description
028714	On/Off Pendant with Lead, 25 ft (7.6 m) (Also comes standard with most machine torch system configurations. See note below.)
128061	On/Off Pendant with Lead, 50 ft (15.2 m)
128062	On/Off Pendant with Lead, 75 ft (23 m)
128316	Kit: Powermax900 Power Unit Wheels
128317	Kit: Powermax900 Pilot Arc Controller
128241	Kit: Powermax900 Machine Interface, 208/240/480V
128242	Kit: Powermax900 Machine Interface, 200/230/400V
128286	Kit: Powermax900 Machine Interface, 400V CE
028907	Work Cable, 50 ft (15.2 m)
028908	Kit: Powermax900, Cooling Air Filter
011079	Filter Element
129019	Jumper:Powermax900 Link Box
128312	Kit: Powermax900 600V Conversion
128313	Kit: Powermax900 CE 230V Conversion
008809	Fuse:1A 600V 13/32 X 1-1/2 Slo (Used on 208/240/480V power supplies)
008958	Fuse:1A 500V 10mm X 38mm Slo (Used on 200/230/400V and 400V CE power supplies)
023206	Cable: Machine Interface, 25 ft (7.6 m) (Comes standard with machine torch system configurations and with machine interface kits.)
024548	Leather Cable Covers, 25 ft (7.6 m)
109068	Toroid (Used only on 400V CE power supply linecord assemblies.)

POWER SUPPLIES - 208/240/480V, 1ϕ/3ϕ, 60 HZ

Part Number	For Torch Type	With Pilot Arc Control	With Machine Interface
083063	Hand	No	No
083076	Hand	Yes	No
083077	Machine	No	Yes
083078	Machine	Yes	Yes

POWER SUPPLIES - 200/230/400V, 1ϕ/3ϕ, 50/60 HZ

Part Number	For Torch Type	With Pilot Arc Control	With Machine Interface
083065	Hand	No	No
083082	Hand	Yes	No
083083	Machine	No	Yes
083084	Machine	Yes	Yes

Note: Contact your distributor or call the nearest Hypertherm office for hand and machine torch system configurations.

POWER SUPPLIES - 400V CE, 3ϕ, 50 HZ

Part Number	For Torch Type	With Pilot Arc Control	With Machine Interface
083064	Hand	No	No
083079	Hand	Yes	No
083080	Machine	No	Yes
083081	Machine	Yes	Yes

Note: Contact your distributor or call the nearest Hypertherm office for hand and machine torch system configurations.

In the event that the Powermax900 was configured incorrectly for the incoming power, fuses F1 and/or F2 may have blown to protect the power supply.

WARNING

SHOCK HAZARD: Always turn off power, unplug cord from wall and wait 5 minutes before removing any power supply cover. If power supply is directly connected to a line disconnect switch, place line disconnect switch to OFF position. In the U.S., use a "lock-out / tag-out" procedure until the service or maintenance work is complete. In other countries, follow appropriate local or national safety procedures.

1. Turn the Powermax900 power switch to the OFF (0) position, unplug the power cable from the wall receptacle and disconnect the gas supply. See warning above.

2. Remove the screws that secure the power supply cover to the chassis.

3. Remove the cover and find F1 and F2 power fuses - Fig. a-1.

4. Remove and check the fuses. Replace, if necessary:

   Fuse part number 008809 for 208/240/480V power supplies;
   Fuse part number 008958 for 200/230/400V and 400V CE power supplies.

5. Replace the power supply cover.

6. Be certain that a licensed electrician verifies incoming power and configures the Powermax900 appropriately. See voltage configurations in the **Setup** section beginning on page 3-4.

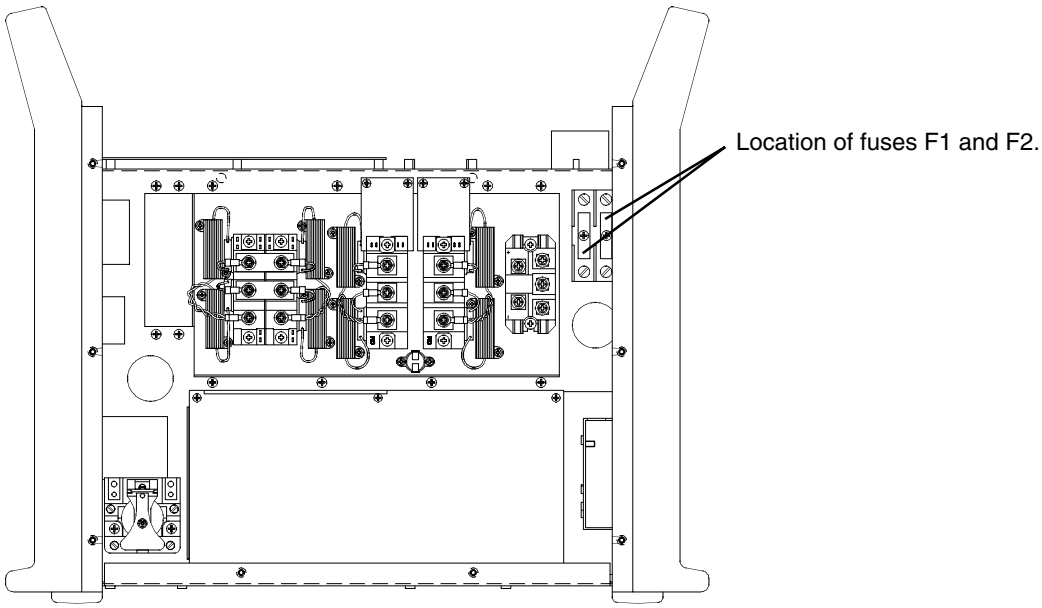

Figure a-1 F1 and F2 Fuse Location

STANDARDS INDEX

The *Standards Index* contains a list of publications dealing with plasma arc cutting equipment safety practices.

1. ANSI Standard Z49.1, *Safety in Welding and Cutting*, obtainable from the American Welding Society, 550 LeJeune Road, P.O. Box 351020, Miami, FL 33135.

2. NIOSH, *Safety and Health in Arc Welding and Gas Welding and Cutting*, obtainable from the Superintendent of Documents, U.S. Government Printing Office, Washington, D.C. 20402.

3. OSHA, *Safety and Health Standards*, 29FR 1910, obtainable from the U.S. Government Printing Office, Washington, D.C. 20402.

4. ANSI Standard Z87.1, *Safe Practices for Occupation and Educational Eye and Face Protection*, obtainable from the American National Standards Institute, 1430 Broadway, New York, NY 10018.

5. ANSI Standard Z41.1, *Standard for Men's Safety-Toe Footwear*, obtainable from the American National Standards Institute, 1430 Broadway, New York, NY 10018.

6. ANSI Standard Z49.2, *Fire Prevention in the Use of Cutting and Welding Processes*, obtainable from the American National Standards Institute, 1430 Broadway, New York, NY 10018.

7. AWS Standard A6.0, *Welding and Cutting Containers Which Have Held Combustibles*, obtainable from the American Welding Society, 550 LeJeune Road, P.O. Box 351040, Miami, FL 33135.

8. NFPA Standard 51, *Oxygen — Fuel Gas Systems for Welding and Cutting*, obtainable from the National Fire Protection Association, 470 Atlantic Avenue, Boston, MA 02210.

9. NFPA Standard 70-1978, *National Electrical Code*, obtainable from the National Fire Protection Association, 470 Atlantic Avenue, Boston, MA 02210.

10. NFPA Standard 51B, *Cutting and Welding Processes*, obtainable from the National Fire Protection Association, 470 Atlantic Avenue, Boston, MA 02210.

11. CGA Pamphlet P-1, *Safe Handling of Compressed Gases in Cylinders*, obtainable from the Compressed Gas Association, 1235 Jefferson Davis Highway, Arlington, VA 22202.

12. CSA Standard W117.2, *Code for Safety in Welding and Cutting*, obtainable from the Canadian Standards Association Standard Sales, 178 Rexdale Boulevard, Rexdale, Ontario M9W 1R3, Canada.

13. NWSA booklet, *Welding Safety Bibliography*, obtainable from the National Welding Supply Association, 1900 Arch Street, Philadelphia, PA 19103.

14. American Welding Society Standard AWS F4.1, *Recommended Safe Practices for the Preparation for Welding and Cutting of Containers and Piping That Have Held Hazardous Substances*, obtainable from the American Welding Society, 550 LeJeune Road, P.O. Box 351040, Miami, FL 33135.

15. ANSI Standard Z88.2, *Practices for Respiratory Protection*, obtainable from the American National Standards Institute, 1430 Broadway, New York, NY 10018.

16. Canadian Electrical Code Part 1, *Safety Standards for Electrical Installations*, obtainable from the Canadian Standards Association, 178 Rexdale Boulevard, Rexdale, Ontario, Canada M9W1R3.

AERATION MANIFOLD FOR PLASMA CUTTING ALUMINUM

Introduction

When plasma arc cutting aluminum at the water table surface or below water, free hydrogen gas may be generated by the cutting process. The high temperature of the plasma process causes disassociation of oxygen and hydrogen from the water in the water table. The hot aluminum, which has a high affinity for oxygen, then combines with the oxygen leaving free hydrogen.

An effective means of avoiding free hydrogen buildup is to install an aeration manifold on the floor of the water table to replenish the oxygen content of the water.

Making an Aeration Manifold - Figure c-1

Make an **Aeration Manifold** with two-inch (50 mm) PVC tubing with one-inch (25 mm) **Distribution Lines** connected to it. Drill 1/8 inch (3 mm) holes every six inches (150 mm) in the distribution lines. Cap the ends of the distribution lines and install the lines so that oxygen is delivered to all parts of the cutting area.

Connect the manifold to a shop air line. Set a pressure regulator to obtain a steady stream of bubbles.

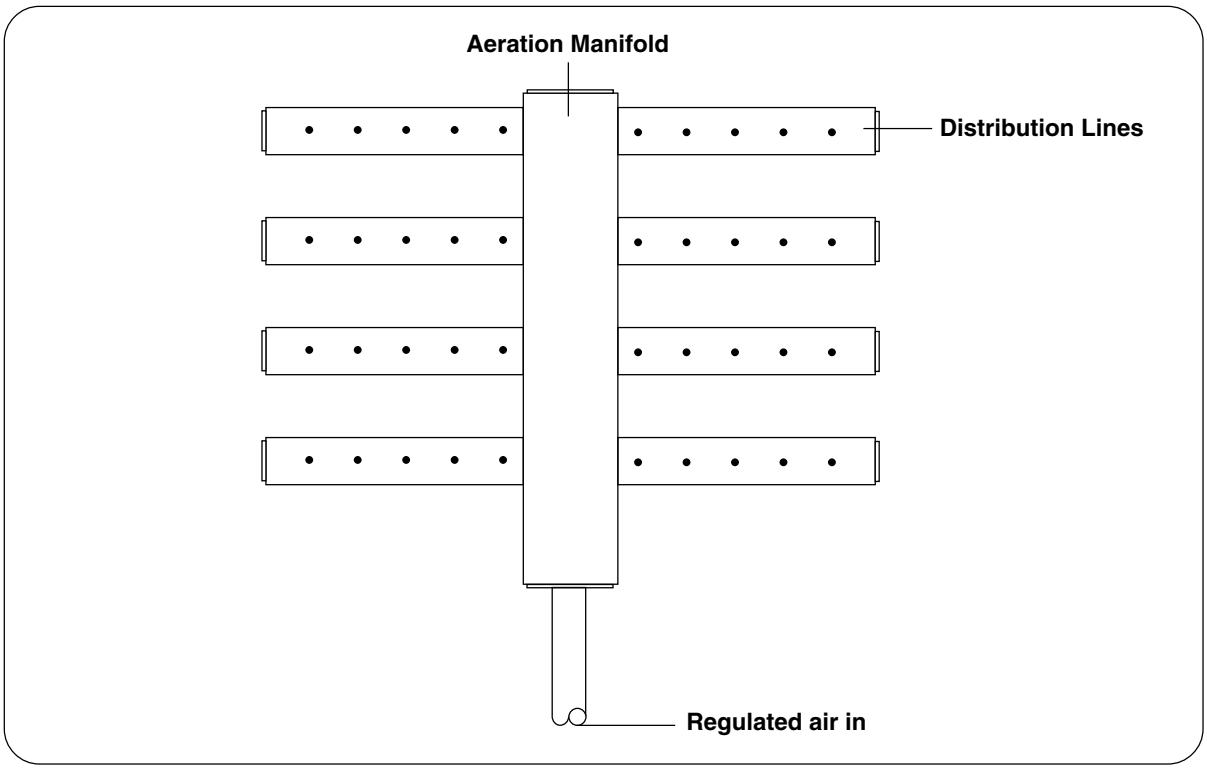

Figure c-1 Aeration Manifold