HYPERTHERM®
A Hypertherm Associates Brand

Torch and consumables catalog

For Powermax® and MAX® plasma systems

Contents

4 Powermax30® XP/ Powermax33® XP
5 Duramax® LT hand and machine torch parts

6 Powermax30® AIR
7 AIR T30 hand torch parts

8 Powermax45 SYNC®/65 SYNC/85 SYNC/105 SYNC
9 SmartSYNC® 75° hand torch parts
10 SmartSYNC® 15° hand torch parts
11 SmartSYNC® 180° full-length machine torch parts
12 SmartSYNC® 180° robotic/mini machine torch parts
13 SmartSYNC® 45° robotic torch parts
14 SmartSYNC® 90° robotic torch parts
15 SmartSYNC® 45° long hand torch replacement parts
16 SmartSYNC® 45° long hand torch replacement parts
17 SmartSYNC® 90° long hand torch replacement parts
18 SmartSYNC® 90° long hand torch replacement parts

20 Powermax125®
22 Duramax® Hyamp™ 85° hand torch parts
23 Duramax® Hyamp™ 15° hand torch parts
24 Duramax® Hyamp™ 180° full-length machine torch parts
25 Duramax® Hyamp™ mini machine torch parts
26 Duramax® Hyamp™ 180° robotic torch parts
27 Duramax® Hyamp™ 90° robotic torch parts
28 Duramax® Hyamp™ 45° robotic torch parts
29 Duramax® Hyamp™ 45° Long hand torch replacement parts
30 Duramax® Hyamp™ 45° Long hand torch replacement parts (continued)
31 Duramax® Hyamp™ 90° Long hand torch replacement parts
32 Duramax® Hyamp™ 90° Long hand torch replacement parts (continued)

34 Powermax cartridge upgrade options
35 Powermax cartridges

36 Powermax30®
37 T30v hand torch parts

38 Powermax45®
40 T45v hand torch parts
41 T45m machine torch parts

42 Powermax45 XP/65/85/105®
44 Duramax® 75° hand torch parts
44 Duramax® 15° hand torch parts
45 Duramax® 180° machine torch parts
45 Duramax® 180° mini machine torch parts
46 Duramax® 180° robotic torch parts
46 Duramax® 90° robotic torch parts
47 Duramax® 45° robotic torch parts
48 Duramax® Lock 75° hand torch parts
49 Duramax® Lock 15° hand torch parts
50 Duramax® Lock 180° full-length machine torch parts

51 Duramax® HRT/HRTs/MRT retrofit torch
51 Duramax® HRT/HRTs hand torch parts
52 Duramax® MRT machine torch parts

53 Duramax® HRT/MRT retrofit torch
53 Duramax® HRT hand torch parts
54 Duramax® MRT machine torch parts

55 Powermax1000/1250/1650®

57 Powermax® bulk pack consumables

58 Appendix
62 MAX® and Powermax® legacy products support and upgrade guide

64 Accessories

Torch type	System	Torch style
SmartSYNC®	Powermax45 SYNC/65 SYNC/85 SYNC/105 SYNC	

Hand

Long

Machine

Robotic

For technical support questions go to
www.hypertherm.com/contact-us/technical/

Powermax®

Product line overview

	Powermax30® AIR	Powermax33 XP	Powermax45 SYNC	Powermax65 SYNC	Powermax85 SYNC	Powermax105 SYNC	Powermax125
Recommended cut capacity	8 mm (5/16")	13 mm (1/2")	16 mm (5/8")	20 mm (3/4")	25 mm (1")	32 mm (1-1/4")	38 mm (1-1/2")
Severance cut capacity	16 mm (5/8")	20 mm (3/4")	29 mm (1-1/8")	32 mm (1-1/4")	8 mm (1-1/2")	50 mm (2")	57 mm (2-1/4")
Output range	15–30	15–33	9–45	20–65	25–85	30–105	30–125
Input phase	Single	Single	Single or three	Single or three	Single or three	Three	Three

Application capabilities							
Mechanized cutting		●	●	●	●	●	●
Consumables for portable automation, CNC table and robotic cutting.							
Drag cutting	●	●	●	●	●	●	●
Consumables for placing the torch directly on the work piece without a standoff.							
FineCut®		●	●	●	●	●	●
FineCut® consumables for narrow kerf width with minimal dross and heat affected zone.							
Marking			●*				
Consumables for scoring, indicating part identification hole or weld locations.							
Max control gouging			●	●	●	●	●
Consumables for precise metal removal, shallower gouge profiles and light metal washing.							
Max removal gouging			●	●	●	●	●
Consumables for aggressive metal removal, deep gouge profiles and extreme metal washing.							
HyAccess™		●		●	●	●	
HyAccess™ extended reach consumables for improved visibility and accessibility when cutting or gouging in confined spaces.							
FlushCut™				●	●	●	●
FlushCut™ consumables for cutting closer to base materials as possible without piercing or damaging the workpiece.							
HyPilot™						●	
Optimizes consumable life to minimize costs for continuous pilot arc plasma cutting.							

* Mark and cut with the same cartridge

Powermax30® XP and Powermax33® XP

Duramax® LT hand torch consumables

Minimum order quantity		1	1	5		5	1
Consumable type	**Torch type**	**Shield/deflector**	**Retaining cap**	**Nozzle**		**Electrode**	**Swirl ring**
Standard (15–33 A)	Hand	420116	420114	420118		420120	420211
Quantity in kit		2 (1 each)	1	4	3	7	1
Essential cutting kit – 851479 (15–33 A)	Hand	420116 (Standard shield) 420115 (FineCut deflector)	420114	420118 (Standard)	420117 (FineCut)	420120	420211
				Combination kit 428243[1]			

[1]Kit contains 2 standard nozzles (420118) and 2 electrodes (420120)

Minimum order quantity		1	1	5	5	1
Consumable type	**Torch type**	**Shield/deflector**	**Retaining cap**	**Nozzle**	**Electrode**	**Swirl ring**
FineCut (15–33 A)	Hand	420115	420114	420117	420120	420211
				Combination kit 428244[2]		

[2]Kit contains 2 FineCut nozzles (420117) and 2 electrodes (420120)

Minimum order quantity		1	1	1	1
Consumable type	**Torch type**	**Retaining cap**	**Nozzle**	**Electrode**	**Swirl ring**
HyAccess drag cutting (15–33 A)	Hand	420148	420144	420137	420211
HyAccess gouging (15–33 A)			420147		
Quantity in kit		1	1	1	2	1
HyAccess kit – 428337 (15–33 A)	Hand	420148	420144 (cutting)	420147 (gouging)	420137	420211

Minimum order quantity		1	1	5	5	1
Consumable type	**Torch type**	**Shield/deflector**	**Retaining cap**	**Nozzle**	**Electrode**	**Swirl ring**
Mechanized (15–33 A)	Machine	220673	420114	420118	420120	420211

Duramax® LT hand torch parts

For use with the Powermax30® XP and Powermax33® XP

Duramax LT hand torch parts

You can replace the entire hand torch and lead assembly, or you can replace individual torch components.

Item	Kit/Part number	Description
	428174	Kit: Duramax LT hand torch assembly with 4.6 m (15') lead. The torch assembly includes one set of general-purpose (standard) consumables: electrode (420120), swirl ring (420211), retaining cap (420114), nozzle (420118), shield (420116)
1	228109	Kit: Torch cap-sensor switch
2	428162	Kit: Torch start switch
3	428178	Kit: Duramax LT torch body (includes o-ring)
4	428179	Kit: Replacement o-rings for torch body
5	428156	Kit: Torch trigger and spring
6	428182	Kit: Replacement springs for torch trigger
7	428177	Kit: Duramax LT torch handle (includes handle screws)
8	428181	Kit: Duramax LT torch replacement handle screws
9	428176	Kit: Duramax LT torch lead, 4.6 m (15'), with strain relief

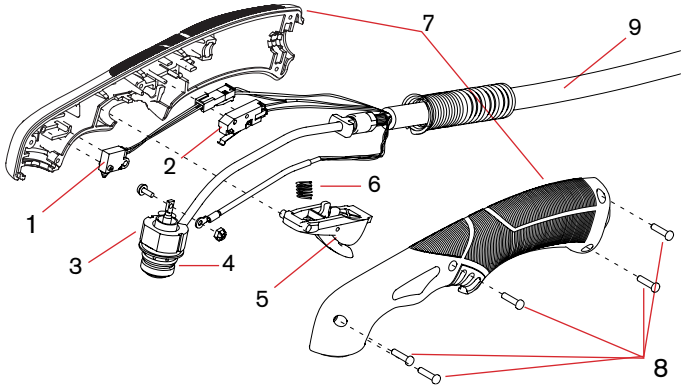

Duramax® LT machine torch parts

For use with the Powermax30® XP and Powermax33® XP

Duramax LT machine torch parts

Item	Kit/Part number	Description
	429219[1]	Kit: Duramax LT machine torch assembly with 4.6 m (15') lead
	429224	Kit: Duramax LT machine torch main body
1	429241	Kit: Duramax LT positioning sleeve
2	429242	Kit: Duramax LT torch lead 4.6 m (15') replacement
3	228322[2]	Kit: Duramax LT front mounting ring
4	228323[2]	Kit: Duramax LT rear mounting ring
5	228321[2]	Kit: Duramax LT cap-sensor switch replacement
6	058503	O-ring: Viton 9.626 x 0.070
	228229[2]	Kit: T45m/Duramax LT gear rack replacement (optional)

[1]This kit includes one set of standard machine torch consumables.
[2]This kit can be used on both the Duramax LT machine torch and the Powermax45 T45m machine torch.

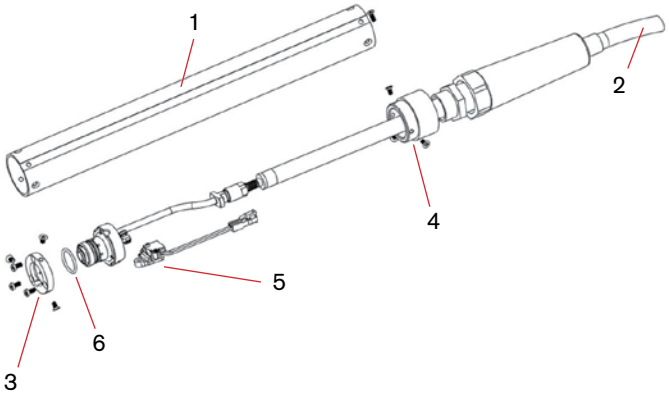

Powermax30® AIR

AIR T30 hand torch consumables

Minimum order quantity		1	1	5	5	1
Consumable type	**Torch type**	**Shield/deflector**	**Retaining cap**	**Nozzle**	**Electrode**	**Swirl ring**
Drag cutting (15–30 A)	Hand	420399	420135	420134	420132	420133
Quantity in kit		1	1	7	7	1
Essential cutting kit – 851462 (15–30 A)	Hand	420399	420135	420134	420132	420133
				Combination kit 428350[1]		

[1]Kit contains 2 standard nozzles (420134) and 2 electrodes (420132)

AIR T30 hand torch parts

For use with the Powermax30® AIR

AIR T30 hand torch parts

You can replace the entire hand torch and lead assembly, or you can replace individual torch components.

Item	Kit/Part number	Description
	428393[1]	Kit: AIR T30 hand torch assembly with 4.6 m (15') lead
1	228109	Kit: Torch cap-sensor switch
2	428162	Kit: Torch start switch
3	428394	Kit: AIR T30 torch body (includes o-ring)
4	428179	Kit: Replacement o-rings for torch body
5	428156	Kit: Torch trigger and spring
6	428182	Kit: Replacement springs for torch trigger
7	428381	Kit: AIR T30 torch handle (includes handle screws)
8	428181	Kit: AIR T30 torch replacement handle screws
9	428176	Kit: AIR T30 torch lead, 4.6 m (15'), with strain relief

[1]Assembly includes consumables.

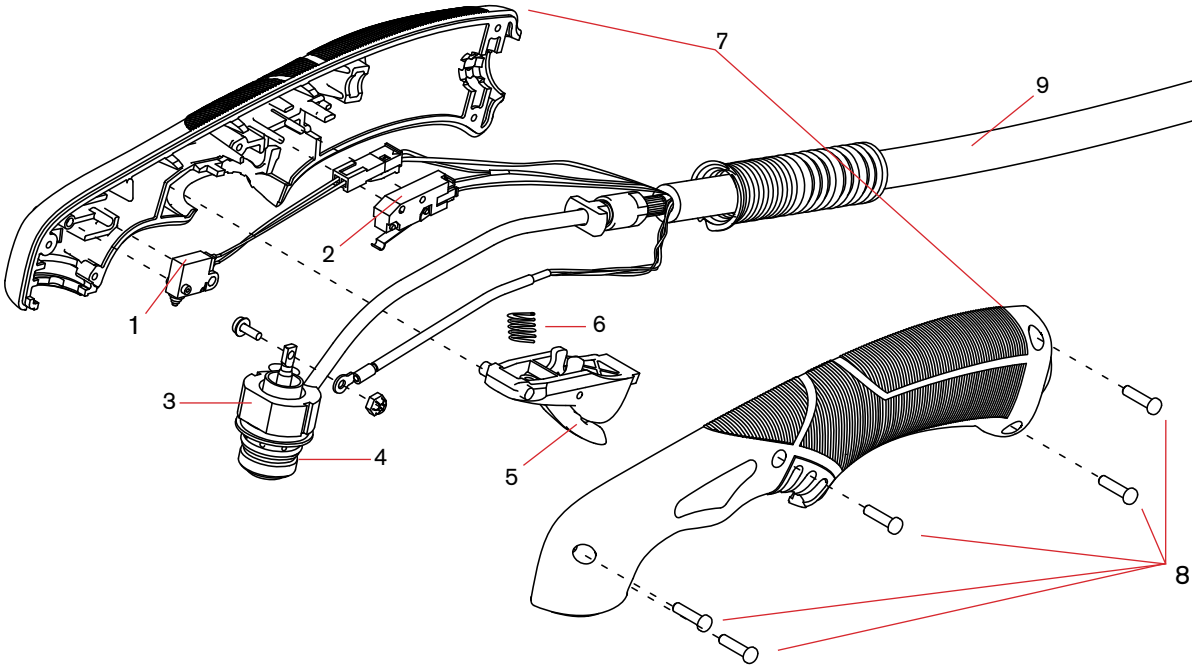

Powermax45 SYNC®/65 SYNC/85 SYNC/105 SYNC

SmartSYNC® hand/machine torch cartridges

Channel partner minimum order quantity		5	Powermax45 SYNC	Powermax65 SYNC	Powermax85 SYNC	Powermax105 SYNC
Drag cutting	45 A	428927	●	●	●	●
	65 A	428931		●	●	●
	85 A	428935			●	●
	105 A	428937				●

Channel partner minimum order quantity		1				
FineCut hand cutting	30–45 A	428928	●	●	●	●

Channel partner minimum order quantity		5				
Mechanized cutting	45 A	428925	●	●	●	●
	65 A	428930		●	●	●
	85 A	428934			●	●
	105 A	428936				●
FineCut mechanized cutting	30–45 A	428926		●	●	●

No channel partner minimum order quantity		1				
Ohmic ring kit (3) rings per kit	All	428895	●	●	●	●

Channel partner minimum order quantity		5				
Max removal gouging	45–85 A	428932	●	●	●	
	105 A	428938				●
Max control gouging	45–85 A	428933	●	●	●	
	105 A	428939				●

Channel partner minimum order quantity		1				
FlushCut™	65 A	428952		●	●	●
	85 A	428953			●	●
	105 A	428954				●

Channel partner minimum order quantity		1				
HyAccess™ drag cutting	65 A	428984		●	●	●
HyAccess gouge	65 A	428987		●	●	●
HyAccess mechanized cutting	65 A	528079		●	●	●

Channel partner minimum order quantity		5				
HyPilot mechanized cutting	105 A	528157				●

SmartSYNC® 75° hand torch parts

For use with the Powermax45 SYNC®/65 SYNC/85 SYNC/105 SYNC

SmartSYNC 75° hand torch assembly

Item	Kit/Part number	Description
	059726	SmartSYNC 75° hand torch assembly with 7.6 m (25') lead
	059727	SmartSYNC 75° hand torch assembly with 15 m (50') lead
	059728	SmartSYNC 75° hand torch assembly with 23 m (75') lead
	059770	SmartSYNC 75° hand torch assembly with 30 m (100') lead
1	428856	Kit: Handle for 75° hand torch, with 7 screws
2	428873	Kit: Amperage-adjustment control
3	428871	Kit: Torch-lock slider, with yellow and green label
4	428852	Kit: Lead for hand torch, 7.6 m (25')
4	428853	Kit: Lead for hand torch, 15 m (50')
4	428854	Kit: Lead for hand torch, 23 m (75')
5	428863	Kit: Quick-disconnect shell, with button, lever, and 4 screws (does not include torch lead connector)
6	428148	Kit: Screws for torch handle, 7 per kit
7	428958	Kit: Start switch
8	428156	Kit: Trigger, with spring, start switch, and 7 screws for torch handle
9	428182	Kit: Spring for trigger, 5 per kit
10	428877	Kit: Clip for RFID wires, 2 per kit
11	528066	Kit: Torch contact ring, 2 per kit (for torch head)
12	428950	Kit: O-ring, 5 per kit (for torch head)
13	428858	Kit: Body for 75° hand torch, with terminal screw (1/4"), 7 screws for torch handle, silicone lubricant, and thread locker
14	428865	Kit: Cap-sensor switch for 75° hand torch
15	428869	Kit: Radio-frequency printed circuit board

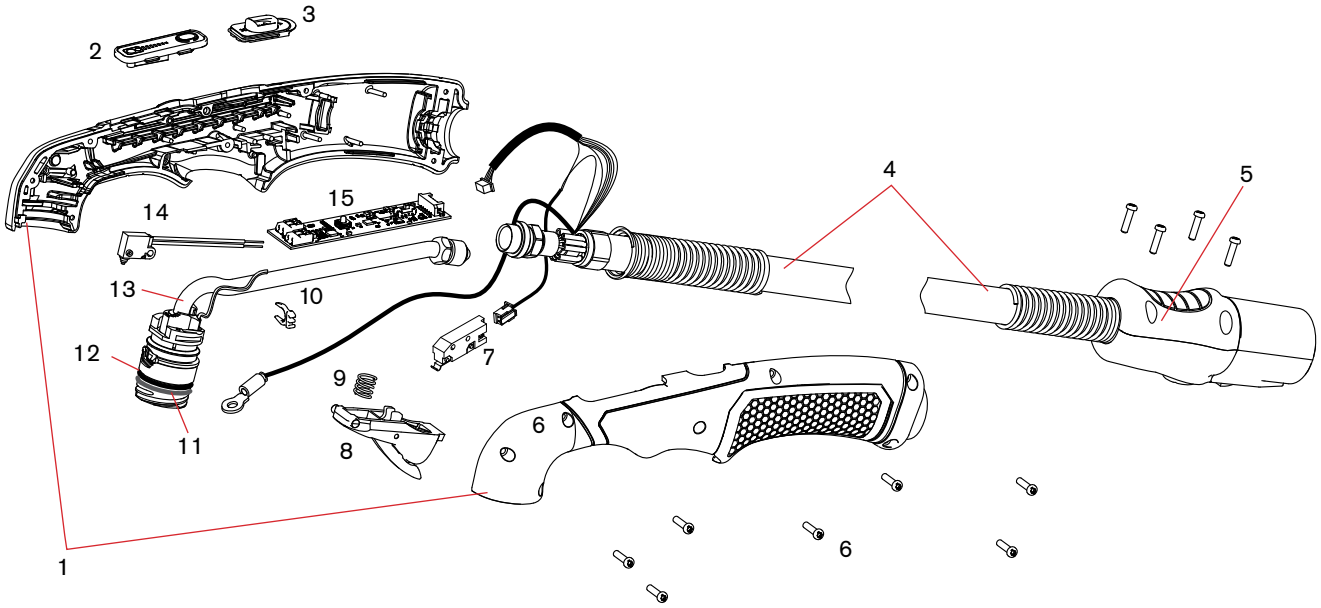

SmartSYNC® 15° hand torch parts

For use with the Powermax45 SYNC®/65 SYNC/85 SYNC/105 SYNC

SmartSYNC 15° hand torch assembly

Item	Kit/Part number	Description
	059723	SmartSYNC 15° hand torch assembly with 7.6 m (25') lead
	059724	SmartSYNC 15° hand torch assembly with 15 m (50') lead
	059725	SmartSYNC 15° hand torch assembly with 23 m (75') lead
1	428855	Kit: Handle for 15° hand torch, with 7 screws
2	428873	Kit: Amperage-adjustment control
3	428871	Kit: Torch-lock slider, with yellow and green label
4	428852	Kit: Lead for hand torch, 7.6 m (25')
4	428853	Kit: Lead for hand torch, 15 m (50')
4	428854	Kit: Lead for hand torch, 23 m (75')
5	428863	Kit: Quick-disconnect shell, with button, lever, and 4 screws (does not include torch lead or connector)
6	428148	Kit: Screws for torch handle, 7 per kit
7	428958	Kit: Start switch
8	428156	Kit: Trigger, with spring, start switch, and 7 screws for torch handle
9	428182	Kit: Spring for trigger, 5 per kit
10	528066	Kit: Torch contact ring, 2 per kit (for torch head)
11	428950	Kit: O-ring, 5 per kit (for torch head)
12	428864	Kit: Cap-sensor switch for 15° hand torch
13	428857	Kit: Body for 15° hand torch, with terminal screw (1/4"), 7 screws for torch handle, silicone lubricant, and thread locker
14	428877	Kit: Clip for RFID wires, 2 per kit
15	428869	Kit: Radio-frequency printed circuit board

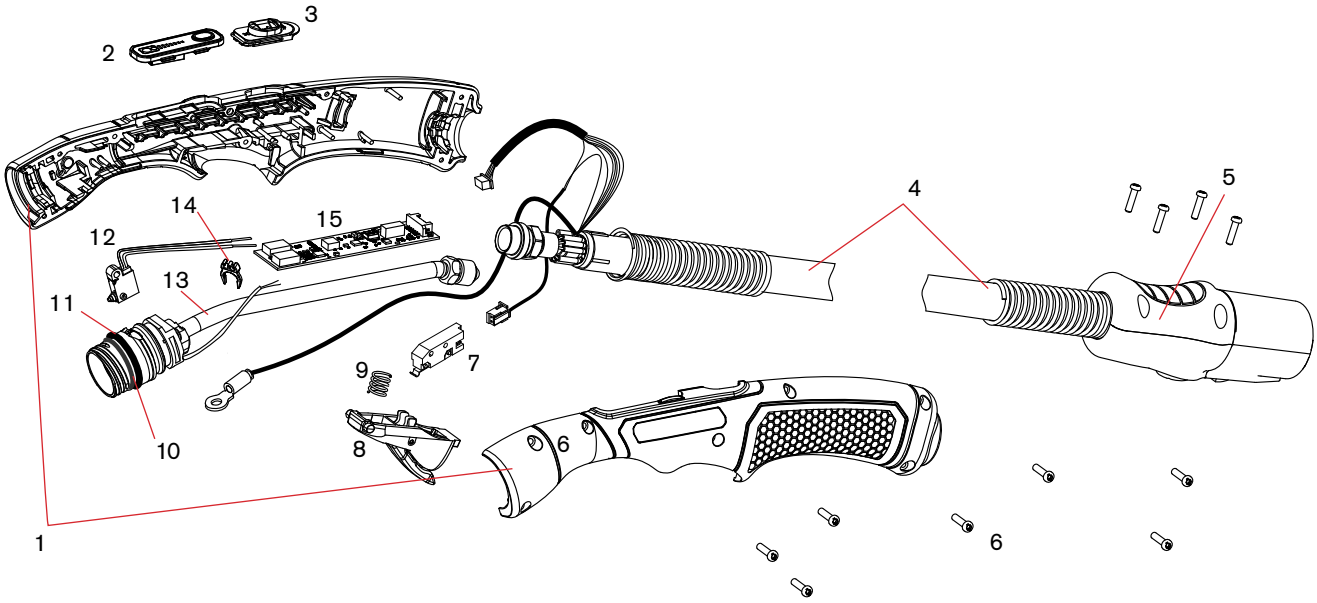

SmartSYNC® 180° full-length machine torch parts

For use with the Powermax45 SYNC®/65 SYNC/85 SYNC/105 SYNC

SmartSYNC 180° machine torch assembly

Item	Kit/Part number	Description
	059719	SmartSYNC full-length machine torch assembly with 7.6 m (25') lead
	059720	SmartSYNC full-length machine torch assembly with 10.7 m (35') lead
	059721	SmartSYNC full-length machine torch assembly with 15 m (50') lead
	059722	SmartSYNC full-length machine torch assembly with 23 m (75') lead
1	428874	Kit: Shell for full-length machine torch
2	428703	Kit: Gear rack for full-length machine torch
3	428872	Kit: Torch-lock slider for full-length machine torch, with yellow and green label
4	428847	Kit: Lead for full-length machine torch, 4.6 m (15')
4	428848	Kit: Lead for full-length machine torch, 7.6 m (25')
4	428849	Kit: Lead for full-length machine torch, 10.7 m (35')
4	428850	Kit: Lead for full-length machine torch, 15 m (50')
4	428851	Kit: Lead for full-length machine torch, 23 m (75')
5	428863	Kit: Quick-disconnect shell, with button, lever, and 4 screws (does not include torch lead or connector)
6	428148	Kit: Screws for torch shell, 7 per kit
7	428877	Kit: Clip for RFID wires, 2 per kit
8	528066	Kit: Torch contact ring, 2 per kit (for torch head)
9	428950	Kit: O-ring, 5 per kit (for torch head)
10	428859	Kit: Body for full-length machine torch, with terminal screw (1/4"), 7 screws for torch handle, and silicone lubricant
11	428866	Kit: Cap-sensor switch for full-length machine torch
12	428870	Kit: Radio-frequency printed circuit board
13	428868	Kit: Switch assembly for torch-lock slider for full-length machine torch

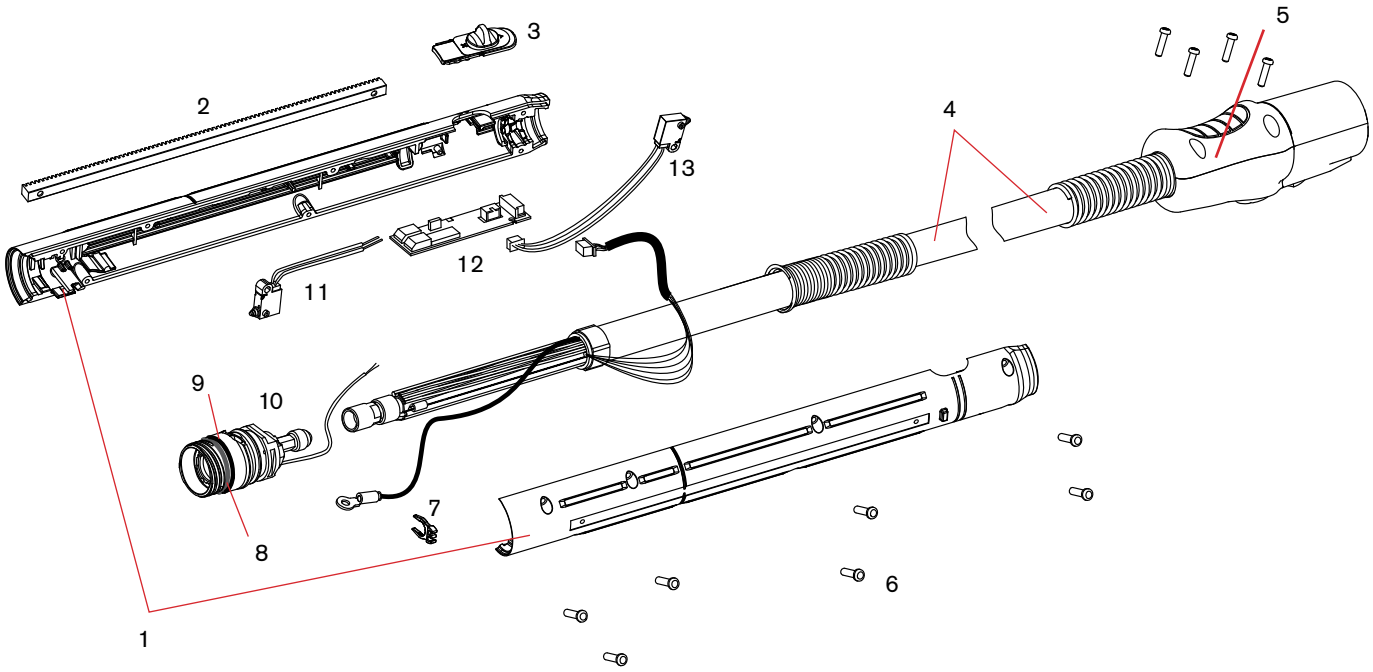

SmartSYNC® 180° robotic/mini machine torch parts

For use with the Powermax45 SYNC®/65 SYNC/85 SYNC/105 SYNC

SmartSYNC 180° mini torch assembly

Item	Kit/Part number	Description
	059733	SmartSYNC Mini machine torch assembly with 4.6 m (15') lead
	059734	SmartSYNC Mini machine torch assembly with 7.6 m (25') lead
	059735	SmartSYNC Mini machine torch assembly with 15 m (50') lead
	059801	SmartSYNC Mini/robotic machine torch with 30 m (100') lead
1	428896	Kit: Shell for mini machine torch
2	528066	Kit: Torch contact ring, 2 per kit (for torch head)
3	428950	Kit: O-ring, 5 per kit (for torch head)
4	428860	Kit: Body for mini machine torch, with terminal screw (1/4"), 7 screws for torch handle, and silicone lubricant
5	428867	Kit: Cap-sensor switch for mini machine torch
6	428870	Kit: Radio-frequency printed circuit board
7	428901	Kit: Mini machine torch lead, 4.6 m (15')
7	428900	Kit: Mini machine torch lead, 7.6 m (25')
7	428902	Kit: Mini machine torch lead,10.7 m (35')
7	428903	Kit: Mini machine torch lead,15 m (50')
7	428904	Kit: Mini machine torch lead, 23 m (75')
7	429247	Kit: Mini machine torch lead, 30 m (100')
8	428863	Kit: Quick-disconnect shell, with button, lever, and 4 screws (does not include torch lead or connector)
9	428148	Kit: Screws for torch shell, 7 per kit
10	428877	Kit: Clip for RFID wires, 2 per kit
11	428899	Kit: Jumper wire for mini machine torch board

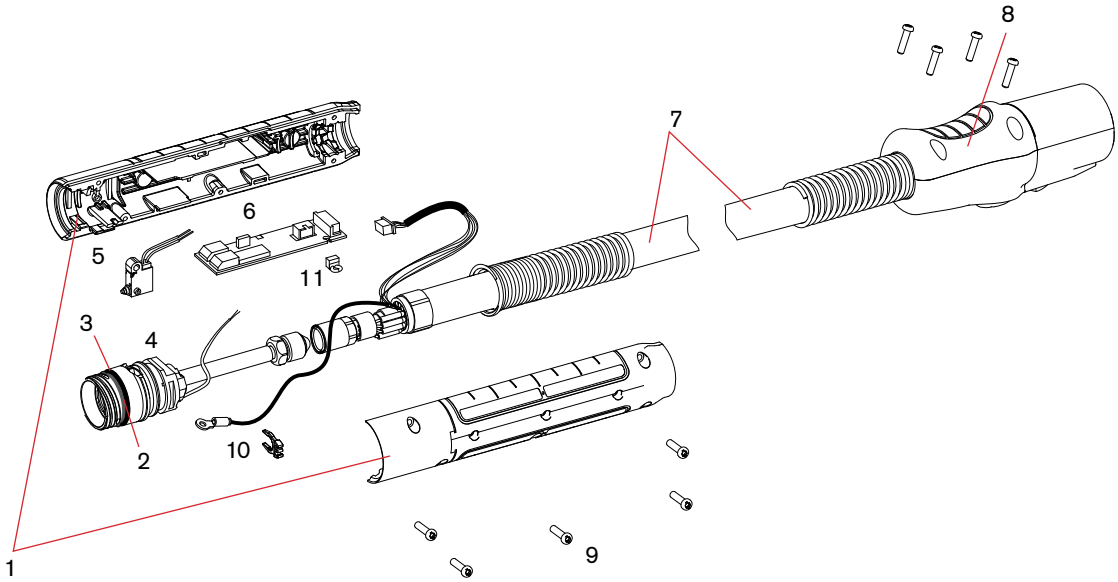

SmartSYNC® 45° robotic torch parts

For use with the Powermax45 SYNC®/65 SYNC/85 SYNC/105 SYNC

SmartSYNC 45° robotic torch assembly

Item	Kit/Part number	Description
	059729	45° robotic torch assembly with 7.6 m (25') lead
	059730	45° robotic torch assembly with 15 m (50') lead
	059766	45° robotic torch assembly with 23 m (75') lead
1	428897	Kit: Shell for 45° robotic torch
2	528066	Kit: Torch contact ring (for torch head)
3	428950	Kit: O-ring, 5 per kit (for torch head)
4	428861	Kit: Body for 45° robotic torch, with terminal screw (1/4"), 5 screws for torch handle, and silicone lubricant
5	428867	Kit: Cap-sensor switch for mini machine or robotic torch
6	428870	Kit: Radio-frequency printed circuit board
7	428900	Kit: Lead for mini machine and robotic torch, 7.6 m (25')
7	428903	Kit: Lead for mini machine and robotic torch,15 m (50')
7	428904	Kit: Lead for mini machine and robotic torch, 23 m (75')
7	229967	Lead for kit 428900, 7.6 m (25')
7	229969	Lead for kit 428903, 15 m (50')
7	229970	Lead for kit 428904, 23 m (75')
8	428863	Kit: Quick-disconnect shell, with button, lever, and 4 screws (does not include torch lead or connector)
9	428148	Kit: Screws for torch shell, 7 per kit
10	428877	Kit: Clip for RFID wires, 2 per kit
11	428899	Kit: Jumper wire for mini machine torch board

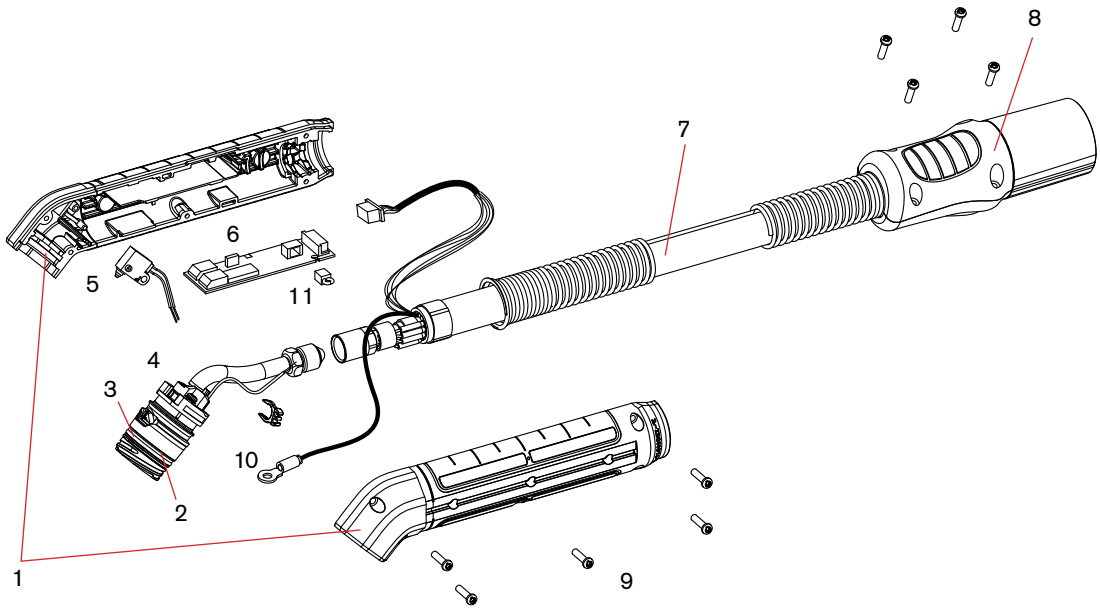

SmartSYNC® 90° robotic torch parts

For use with the Powermax45 SYNC®/65 SYNC/85 SYNC/105 SYNC

SmartSYNC 90° robotic torch assembly

Item	Kit/Part number	Description
	059731	90° robotic torch assembly with 7.6 m (25') lead
	059732	90° robotic torch assembly with 15 m (50') lead
	059767	90° robotic torch assembly with 23 m (75') lead
1	428898	Kit: Shell for 90° robotic torch
2	528066	Kit: Torch contact ring (for torch head)
3	428950	Kit: O-ring, 5 per kit (for torch head)
4	428862	Kit: Body for 90° robotic torch, with terminal screw (1/4"), 5 screws for torch handle, and silicone lubricant
5	428867	Kit: Cap-sensor switch for mini machine or robotic torch
6	428870	Kit: Radio-frequency printed circuit board
7	428900	Kit: Lead for mini machine and robotic torch, 7.6 m (25')
7	428903	Kit: Lead for mini machine and robotic torch,15 m (50')
7	428904	Kit: Lead for mini machine and robotic torch, 23 m (75')
7	229967	Lead for kit 428900, 7.6 m (25')
7	229969	Lead for kit 428903, 15 m (50')
7	229970	Lead for kit 428904, 23 m (75')
8	428863	Kit: Quick-disconnect shell, with button, lever, and 4 screws (does not include torch lead or connector)
9	428148	Kit: Screws for torch shell, 7 per kit
10	428877	Kit: Clip for RFID wires, 2 per kit
11	428899	Kit: Jumper wire for mini machine torch board

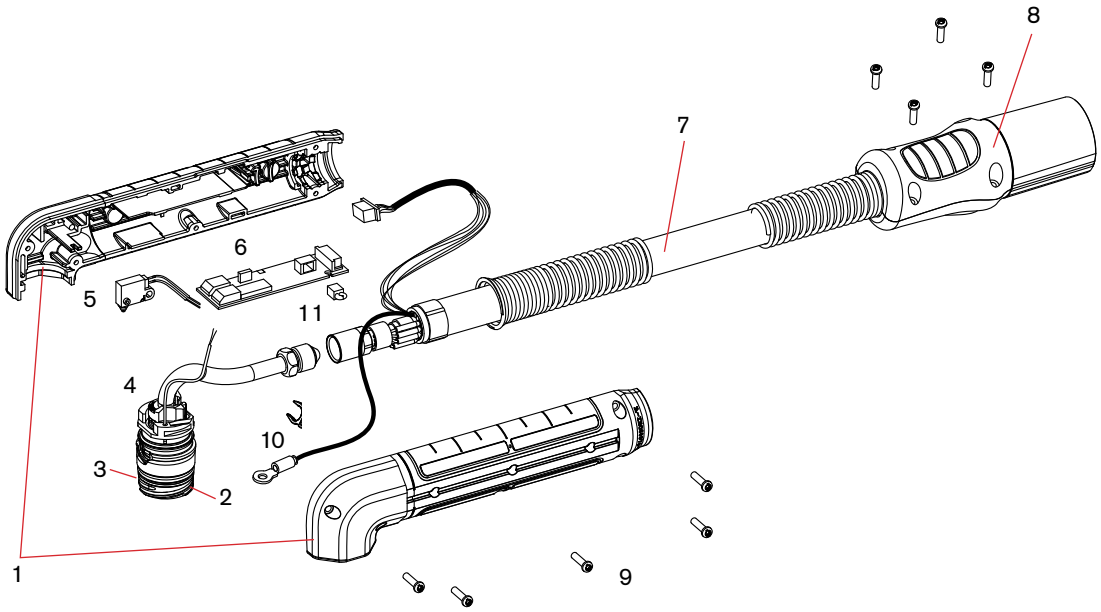

SmartSYNC® long hand torch replacement parts

For use with the Powermax45 SYNC®/65 SYNC/85 SYNC/105 SYNC

SmartSYNC 45° long hand torch assembly – external parts

Item	Kit/Part number	Description
	528114	SmartSYNC 45° long torch with 1.2 m (4') extension and 7.6 m (25') lead
	528116	SmartSYNC 45° long torch with 0.6 m (2') extension and 15.2 m (50') lead
	528118	SmartSYNC 45° long torch with 1.2 m (4') extension and 15.2 m (50') lead
	428852	Kit: Lead for hand torch, 7.6 m (25')
	428853	Kit: Lead for hand torch, 15.2 m (50')
	528091	Kit: SmartSYNC long torch main body replacement – 0.6 m (2'), 45°
	528093	Kit: SmartSYNC long torch main body replacement – 1.2 m (4'), 45°
1	528085	Kit: SmartSYNC long torch handle replacement
2	528086	Kit: SmartSYNC long torch 45^0 front replacement
3	528088	Kit: SmartSYNC long torch extension tube – 0.6 m (2')
3	528089	Kit: SmartSYNC long torch extension tube – 1.2 m (4')
4	528100	Kit: SmartSYNC long torch auxiliary handle replacement
5	428287	Kit: Screws for long torch, 17 per kit
6	428863	Kit: Quick-disconnect shell, with button, level, and 4 screws (does not include torch lead connector)
7	428595	Kit: Hand torch disable slide switch
8	428156	Kit: Trigger, with spring, start switch, and 7 screws for torch handle
9	428182	Kit: Spring for trigger, 5 per kit
10	528066	Kit: Torch contact ring, 2 per kit (for torch head)
11	428950	Kit: O-ring, 5 per kit (for torch head)

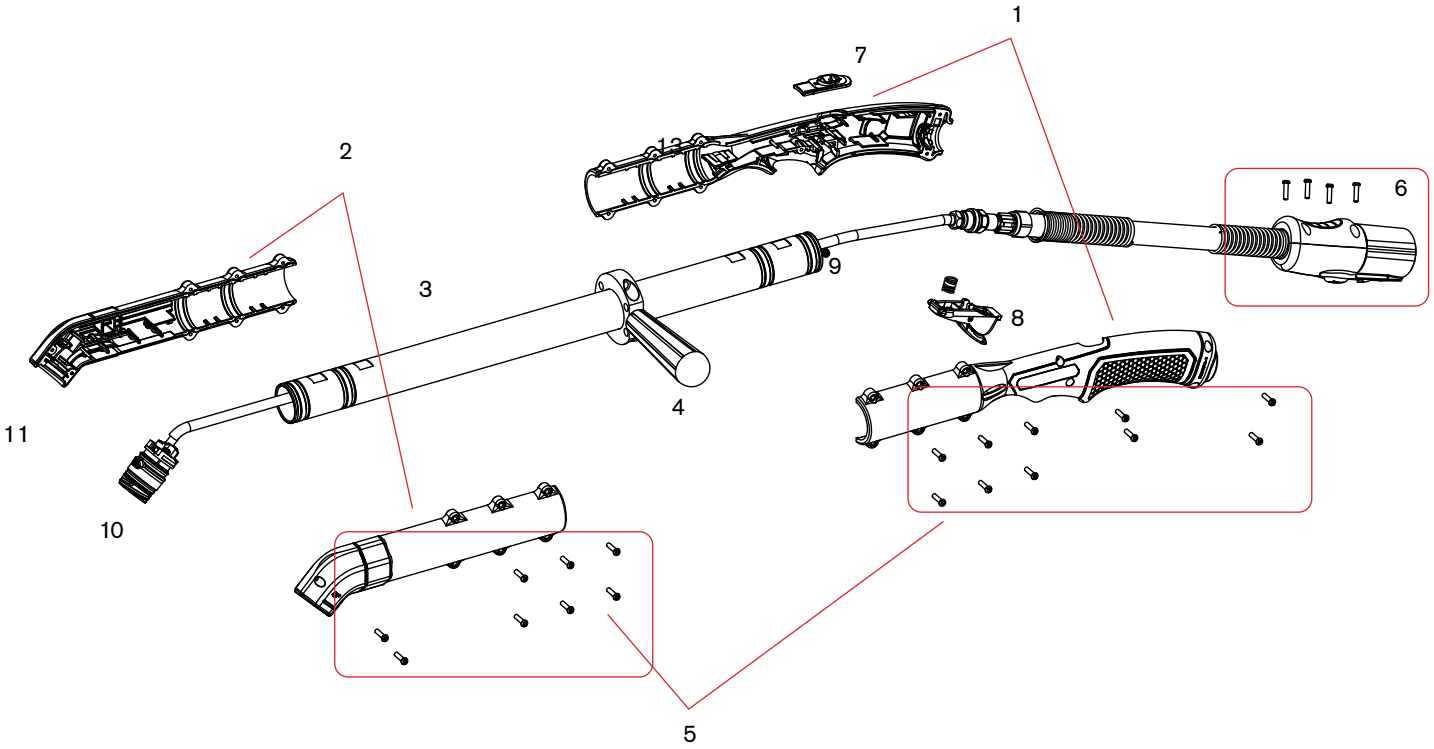

SmartSYNC® long hand torch replacement parts

For use with the Powermax45 SYNC®/65 SYNC/85 SYNC/105 SYNC

SmartSYNC 45° long hand torch assembly – internal parts

Item	Kit/Part number	Description
	528114	SmartSYNC 45° long torch with 1.2 m (4') extension and 7.6 m (25') lead
	528116	SmartSYNC 45° long torch with 0.6 m (2') extension and 15.2 m (50') lead
	528118	SmartSYNC 45° long torch with 1.2 m (4' extension and 15.2 m (50') lead
	428852	Kit: Lead for hand torch, 7.6 m (25')
	428853	Kit: Lead for hand torch, 15.2 m (50')
1	528097	Kit: SmartSYNC long torch wire replacement – 0.6 m (2')
1	528098	Kit: SmartSYNC long torch wire replacement – 1.2 m (4')
2	428958	Kit: Start Switch
3	528066	Kit: Torch contact ring, 2 per kit (for torch head)
4	428950	Kit: O-ring, 5 per kit (for torch head)
5	428870	Kit: Radio-frequency printed circuit board
6	428864	Kit: SmartSYNC cap sensor for 15° and 45° torches

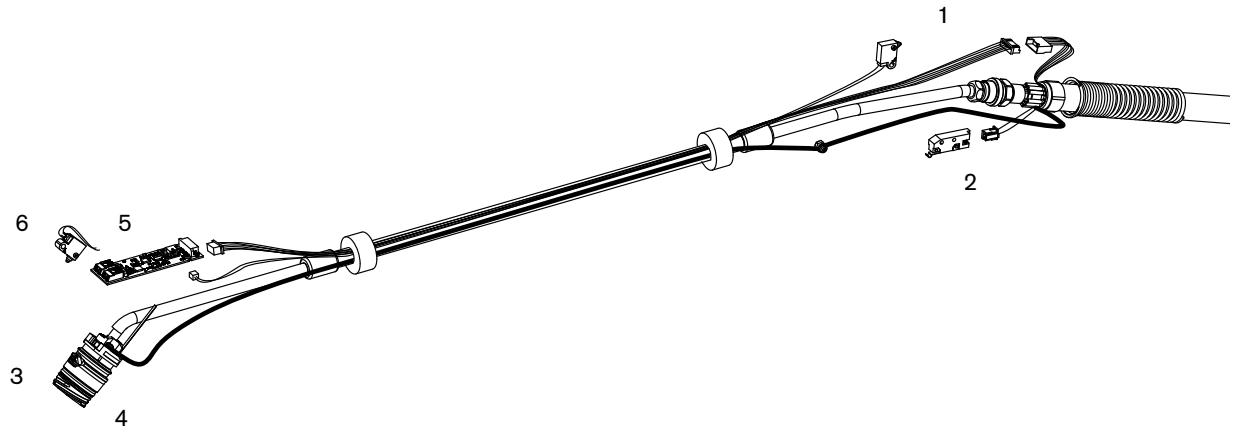

SmartSYNC® long hand torch replacement parts

For use with the Powermax45 SYNC®/65 SYNC/85 SYNC/105 SYNC

SmartSYNC 90° long hand torch assembly – external parts

Item	Kit/Part number	Description
	528117	SmartSYNC 90° long torch with 0.6 m (2') extension and 15.2 m (50') lead
	528119	SmartSYNC 90° long torch with 1.2 m (4') extension and 15.2 m (50') lead
	528097	Kit: SmartSYNC long torch wire replacement – 0.6 m (2')
	528098	Kit: SmartSYNC long torch wire replacement – 1.2 m (4')
	528092	Kit: SmartSYNC long torch main body replacement – 0.6 m (2'), 90^0
	528094	Kit: SmartSYNC long torch main body replacement – 1.2 m (4'), 90^0
1	528085	Kit: SmartSYNC long torch handle replacement
2	528087	Kit: SmartSYNC long torch 90^0 front replacement
3	528088	Kit: SmartSYNC long torch extension tube – 0.6 m (2')
3	528089	Kit: SmartSYNC long torch extension tube – 1.2 m (4')
4	528100	Kit: SmartSYNC long torch auxiliary handle replacement
5	428287	Kit: Screws for long torch, 17 per kit
6	428863	Kit: Quick-disconnect shell, with button, level, and 4 screws (does not include torch lead connector)
7	428595	Kit: Hand torch disable slide switch
8	428156	Kit: Trigger, with spring, start switch, and 7 screws for torch handle
9	428182	Kit: Spring for trigger, 5 per kit
10	528066	Kit: Torch contact ring, 2 per kit (for torch head)
11	428950	Kit: O-ring, 5 per kit (for torch head)

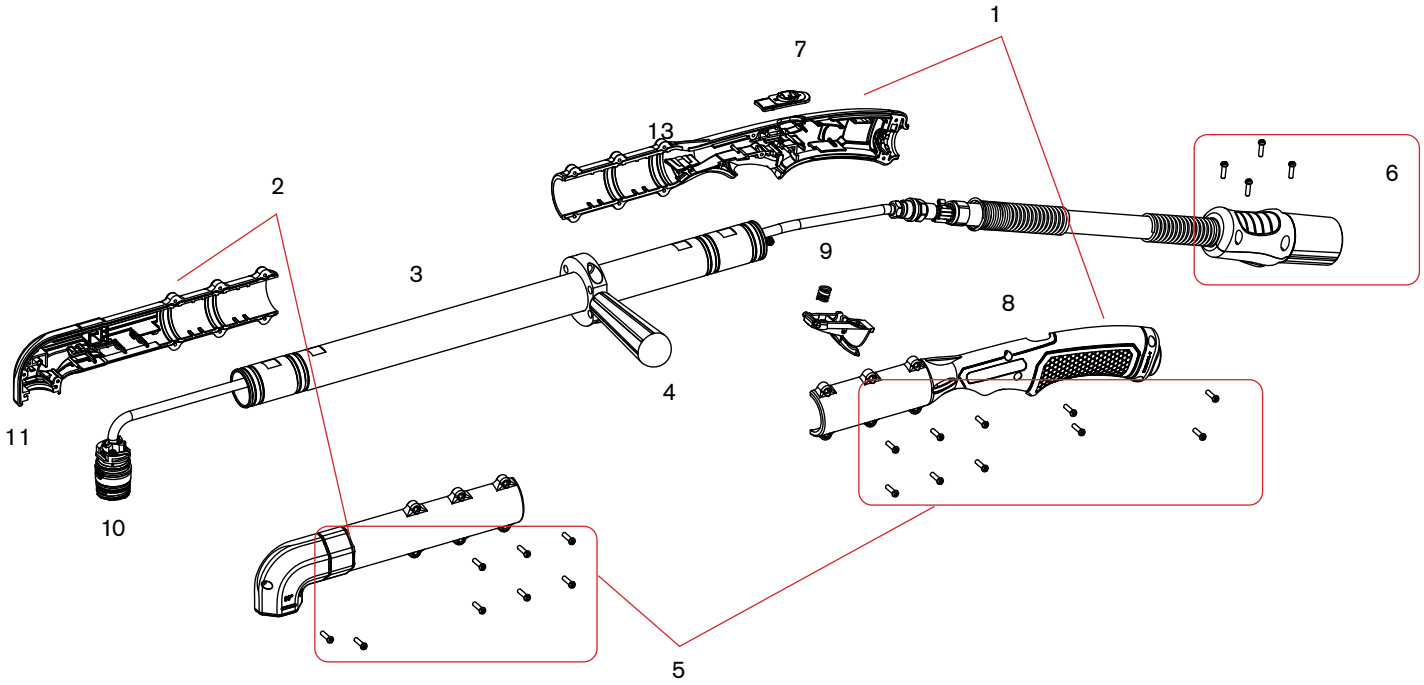

SmartSYNC® long hand torch replacement parts

For use with the Powermax45 SYNC®/65 SYNC/85 SYNC/105 SYNC

SmartSYNC 90° long hand torch assembly – internal parts

Item	Kit/Part number	Description
	528117	SmartSYNC 90° long torch with 0.6 m (2') extension and 15.2 m (50') lead
	528119	SmartSYNC 90° long torch with 1.2 m (4') extension and 15.2 m (50') lead
1	528097	Kit: SmartSYNC long torch wire replacement – 0.6 m (2')
1	528098	Kit: SmartSYNC long torch wire replacement – 1.2 m (4')
2	428958	Kit: Start Switch
3	528066	Kit: Torch contact ring, 2 per kit (for torch head)
4	428950	Kit: O-ring, 5 per kit (for torch head)
5	428870	Kit: Radio-frequency printed circuit board
6	428866	Kit: SmartSYNC cap sensor 90° and mechanized torches

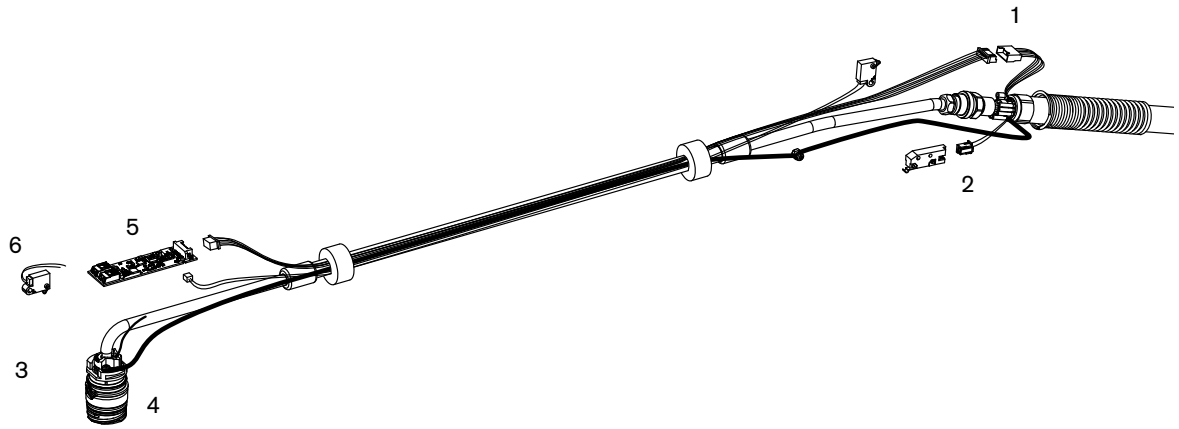

Powermax45 XP

Powermax125®

Duramax® Hyamp™ hand/machine torch consumables

Minimum order quantity		1	1	5	5	1
Consumable type	**Torch type**	**Shield/deflector**	**Retaining cap**	**Nozzle**	**Electrode**	**Swirl ring**
Drag cutting (30-125 A)	Hand	420172 (45 A)	220977	420158 (45 A)	220971	220997
		420172 (65 A)		420169 (65 A)		
		420000 (125 A)		220975 (125 A)		
Quantity in kit		2	1	6	6	1
Essential cutting kit – 851474 (30–125 A)	Hand	420000	220977	220975	220971	220997

Minimum order quantity		1	1	5	5	1
Consumable type	**Torch type**	**Shield/deflector**	**Retaining cap**	**Nozzle**	**Electrode**	**Swirl ring**
Mechanized (30–125 A)	Machine	420168 (45 A)	220977 or 420156 (ohmic)	420158 (45 A)	220971	220997
		420168 (65 A)		420169 (65 A)		
		220976 (65–125 A)		220975 (125 A)		
Quantity in kit		2	1	1 / 4	6	1
Essential cutting kit – 851475 or 851476 (ohmic) (30–125 A)	Machine	420168 (45–65 A)	220977 or 420156 ohmic	420158 (65 A) / 220975	220971	220997
		220976 (65–125 A)		420169 (105 A)		

Minimum order quantity		1	1	5	5	1
Consumable type	**Torch type**	**Shield/deflector**	**Retaining cap**	**Nozzle**	**Electrode**	**Swirl ring**
Max removal gouging[1] (65–125 A)	Hand/Machine	420112	220977	420001	220971	220997
Max control gouging[2] (65–125 A)	Hand/Machine	420509				

[1]The Max removal gouging shield is designed for aggressive metal removal, a deep gouge profiles and extreme metal washing.
[2]The Max control gouging shield is designed for more precise metal removal, shallower gouge profiles and light metal washing.

Powermax125® (continued)

Minimum order quantity		1	1	5	5	1
Consumable type	**Torch type**	**Shield/deflector**	**Retaining cap**	**Nozzle**	**Electrode**	**Swirl ring**
FineCut® (30–45 A)	Hand	420152	220977 or 420156 (ohmic)	420151	220971	420159
	Machine					220997

Minimum order quantity		1	1	1	1	1
Consumable type	**Torch type**	**Retaining ring**	**Retaining cap**	**Nozzle/shield assembly**	**Electrode**	**Swirl ring**
Hyamp FlushCut (85–125 A)	Hand/Machine	420485	420490	420489	420553	420484
Quantity in kit		1	1	1	1	1
FlushCut kit – 428713 (85–125 A)	Hand/Machine	420485	420490	420489	420553	420484

Upgrade to the revolutionary Powermax cartridge for Powermax® systems consumable platform with the installation of a retrofit torch or adapter. See pages 46–47 to learn more.

Duramax® Hyamp™ 85° hand torch parts

For use with the Powermax125®

Duramax Hyamp 85° hand torch parts

The entire hand torch and lead assembly can be replaced, or individual component parts can be replaced. Use the following part numbers to replace the entire Duramax Hyamp 85° hand torch assembly. Part numbers starting with 059 indicate complete torch and lead assemblies. Please note Duramax Hyamp torches and consumables are also compatible for use with Powermax45 XP/65/85/105 systems.

Item	Kit/Part number	Description
	059492[1]	Duramax Hyamp 85° hand torch assembly with 7.6 m (25') lead
	059493[1]	Duramax Hyamp 85° hand torch assembly with 15 m (50') lead
	059494[1]	Duramax Hyamp 85° hand torch assembly with 23 m (75') lead
	059665[1, 2]	Duramax Hyamp 85° hand torch assembly with 45.7 m (150') lead
1	228719	Kit: Duramax and Duramax Hyamp hand torch cap-sensor switch
2	075696	Pilot terminal screw
3	428158	Kit: Duramax Hyamp 85° hand torch main body
4	428253	Kit: Duramax Hyamp O-ring (5)
5	428156	Kit: Duramax Hyamp hand torch trigger with spring
6	428162	Kit: Duramax Hyamp start switch
7	428148	Kit: Duramax Hyamp hand torch handle screws
8	428159	Kit: Duramax Hyamp hand torch lead, 7.6 m (25')
8	428160	Kit: Duramax Hyamp hand torch lead, 15 m (50')
8	428161	Kit: Duramax Hyamp hand torch lead, 23 m (75')
8	428762	Kit: Duramax Hyamp hand torch lead, 45.7 m (150')
9	428155	Kit: Duramax Hyamp 85° torch handle
	428260	Kit: Duramax and Duramax Hyamp torch quick disconnect repair (lead side)

[1]The torch assembly does not include consumables.
[2]This torch is only compatible with Powermax125s built after November 14, 2017 (serial number 125-007944 or higher) or that have had the DSP board replaced with a board built after this date.

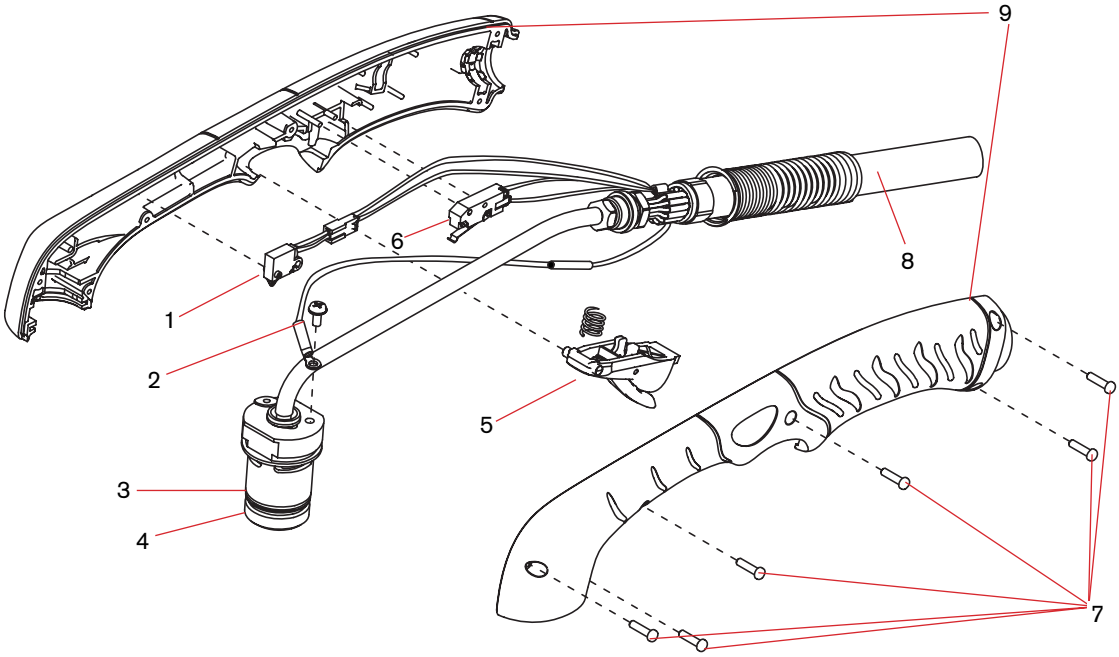

Duramax® Hyamp™ 15° hand torch parts

For use with the Powermax125®

Duramax Hyamp 15° hand torch parts

The entire hand torch and lead assembly can be replaced, or individual component parts can be replaced. Use the following part numbers to replace the entire Duramax Hyamp 85° hand torch assembly. Part numbers starting with 059 indicate complete torch and lead assemblies. Please note Duramax Hyamp torches and consumables are also compatible for use with Powermax45 XP/65/85/105 systems.

Item	Kit/Part number	Description
	059495[1]	Duramax Hyamp 15° hand torch assembly with 7.6 m (25') lead
	059496[1]	Duramax Hyamp 15° hand torch assembly with 15 m (50') lead
	059497[1]	Duramax Hyamp 15° hand torch assembly with 23 m (75') lead
	059664[1, 2]	Duramax Hyamp 15° hand torch assembly with 45.7 m (150') lead
1	228719	Kit: Duramax and Duramax Hyamp hand torch cap-sensor switch
2	075696	Pilot terminal screw
3	428157	Kit: Duramax Hyamp 15° hand torch main body
4	428253	Kit: Duramax Hyamp O-ring (5)
5	428156	Kit: Duramax Hyamp hand torch trigger with spring
6	428162	Kit: Duramax Hyamp start switch
7	428148	Kit: Duramax Hyamp hand torch handle screws
8	428159	Kit: Duramax Hyamp hand torch lead, 7.6 m (25')
8	428160	Kit: Duramax Hyamp hand torch lead, 15 m (50')
8	428161	Kit: Duramax Hyamp hand torch lead, 23 m (75')
8	428762	Kit: Duramax Hyamp hand torch lead, 45.7 m (150')
9	428154	Kit: Duramax Hyamp 15° torch handle
	428260	Kit: Duramax and Duramax Hyamp torch quick disconnect repair (lead side)

[1]The torch assembly does not include consumables.
[2]This torch is only compatible with Powermax125s built after November 14, 2017 (serial number 125-007944 or higher) or that have had the DSP board replaced with a board built after this date.

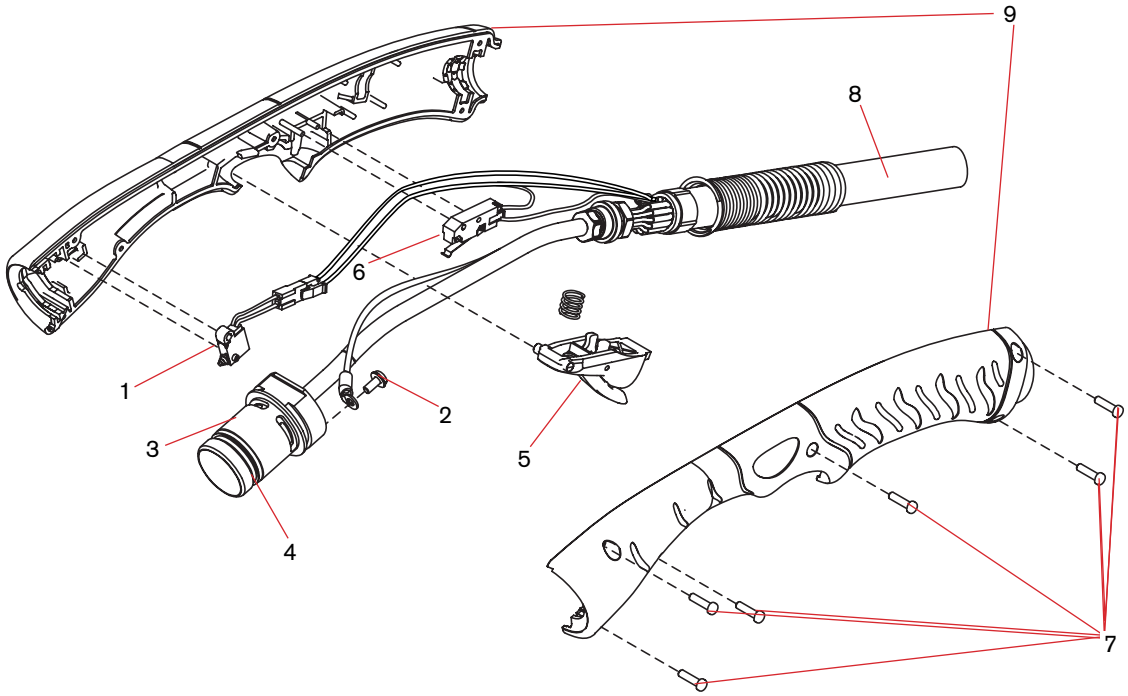

Duramax® Hyamp™ 180° full-length machine torch parts

For use with the Powermax125®

Duramax Hyamp 180° full-length machine torch assembly

The entire machine torch and lead assembly can be replaced, or individual component parts can be replaced. Use the following part numbers to replace the entire Duramax Hyamp 180° full-length machine torch assembly. Part numbers starting with 059 indicate complete torch and lead assemblies. The standard OD on Duramax Hyamp torches is 45 mm (1.75"). Please note Duramax Hyamp torches and consumables are also compatible for use with Powermax45 XP/65/85/105 systems.

Item	Kit/Part number	Description
	059519[1]	Duramax Hyamp 180° full-length machine torch assembly with 4.6 m (15') lead
	059520[1]	Duramax Hyamp 180° full-length machine torch assembly with 7.6 m (25') lead
	059521[1]	Duramax Hyamp 180° full-length machine torch assembly with 10.7 m (35') lead
	059522[1]	Duramax Hyamp 180° full-length machine torch assembly with 15 m (50') lead
	059523[1]	Duramax Hyamp 180° full-length machine torch assembly with 23 m (75') lead
1	428248	Kit: Duramax Hyamp 180° machine torch coupler
2	428144	Kit: Duramax Hyamp 180° full-length machine torch positioning sleeve
3	428145	Kit: Duramax Hyamp 180° machine torch mounting sleeve
4	428253	Kit: Duramax Hyamp O-ring (5)
5	075696	Pilot terminal screw
6	228720	Kit: Duramax/Hyamp/MRT 180° machine torch cap-sensor switch
7	428147	Kit: Duramax Hyamp 180° machine torch main body
8	428149	Kit: Duramax Hyamp 180° machine torch lead, 4.6 m (15')
8	428150	Kit: Duramax Hyamp 180° machine torch lead, 7.6 m (25')
8	428151	Kit: Duramax Hyamp 180° machine torch lead, 10.7 m (35')
8	428152	Kit: Duramax Hyamp 180° machine torch lead, 15 m (50')
8	428153	Kit: Duramax Hyamp 180° machine torch lead, 23 m (75')
	428260	Kit: Duramax and Duramax Hyamp torch quick disconnect repair (lead side)

[1]The torch assembly does not include consumables.

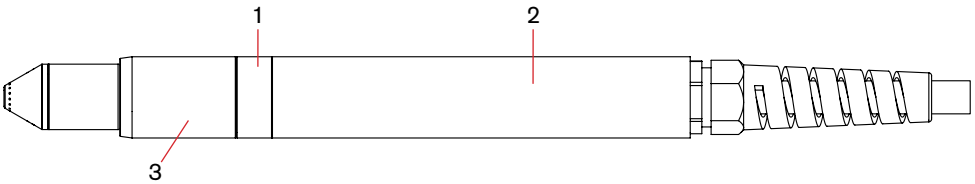

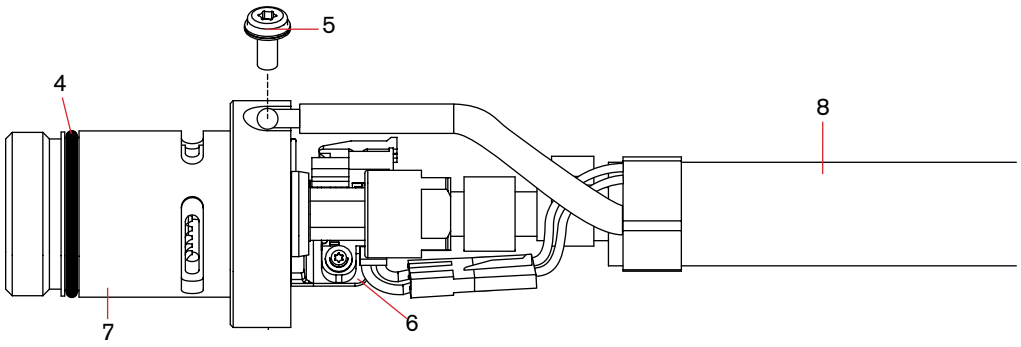

Duramax® Hyamp™ mini machine torch parts

For use with the Powermax125®

Duramax Hyamp 180° mini machine torch assembly

The entire machine torch and lead assembly can be replaced, or individual component parts can be replaced. Use the following part numbers to replace the entire Duramax Hyamp 180° mini machine torch assembly. Part numbers starting with 059 indicate complete torch and lead assemblies. Please note Duramax Hyamp torches and consumables are also compatible for use with Powermax45 XP/65/85/105 systems.

Item	Kit/Part number	Description
	059514[1]	Duramax Hyamp 180° mini machine torch assembly with 4.6 m (15') lead
	059515[1]	Duramax Hyamp 180° mini machine torch assembly with 7.6 m (25') lead
	059516[1]	Duramax Hyamp 180° mini machine torch assembly with 10.7 m (35') lead
	059517[1]	Duramax Hyamp 180° mini machine torch assembly with 15 m (50') lead
	059666[1, 2]	Duramax Hyamp 180° mini machine torch assembly with 45.7 m (150') lead
1	428248	Kit: Duramax Hyamp 180° machine torch coupler
2	428146	Kit: Duramax Hyamp 180° mini machine torch adapter ring
3	428145	Kit: Duramax Hyamp 180° machine torch mounting sleeve
4	428253	Kit: Duramax Hyamp o-ring (5)
5	075696	Pilot terminal screw
6	228720	Kit: Duramax/Hyamp/MRT 180° machine torch cap-sensor switch
7	428147	Kit: Duramax Hyamp 180° machine torch main body
8	428149	Kit: Duramax Hyamp 180° machine torch lead, 4.6 m (15')
8	428150	Kit: Duramax Hyamp 180° machine torch lead, 7.6 m (25')
8	428151	Kit: Duramax Hyamp 180° machine torch lead, 10.7 m (35')
8	428152	Kit: Duramax Hyamp 180° machine torch lead, 15 m (50')
8	428761	Kit: Duramax Hyamp 180° machine torch lead, 45.7m (150')
	428260	Kit: Duramax and Duramax Hyamp torch quick disconnect repair (lead side)

[1]The torch assembly does not include consumables.
[2]This torch is only compatible with Powermax125s built after November 14, 2017 (serial number 125-007944 or higher) or that have had the DSP board replaced with a board built after this date.

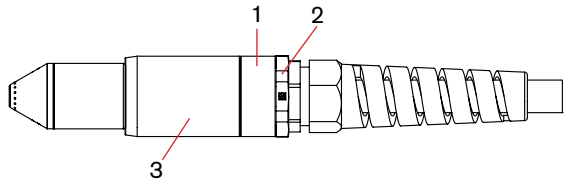

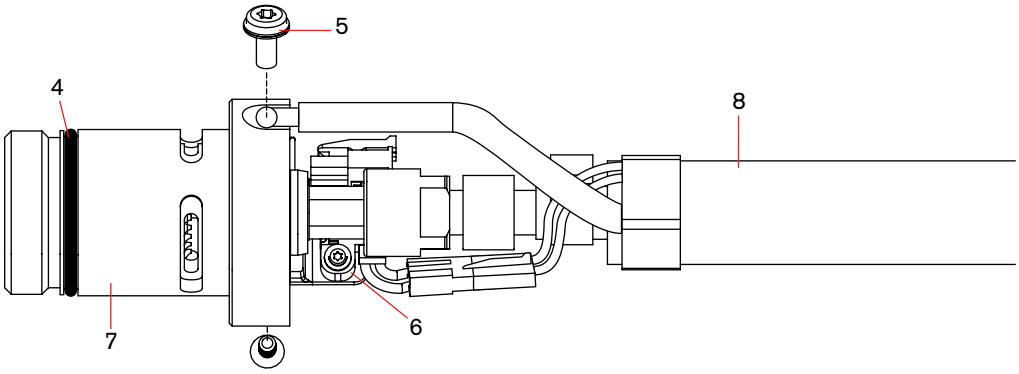

Duramax® Hyamp™ 180° robotic torch parts

For use with the Powermax125®

Duramax Hyamp 180° robotic torch assembly

The entire Duramax Hyamp 180° robotic torch assembly with leads can be replaced, or individual component parts can be replaced. Please note Duramax Hyamp torches and consumables are also compatible for use with Powermax45 XP/65/85/105 systems.

Item	Kit/Part number	Description
	059566	Duramax Hyamp 180° robotic torch assembly with leads, 7.6 m (25')
	059672	Duramax Hyamp robotic torch, 180°, 15.2 m (50') lead
1	428295	Kit: Duramax Hyamp 180° robotic torch barrel
2	428298	Kit: Duramax Hyamp 180° robotic torch main body
3	428253	Kit: Duramax Hyamp O-ring (5)
4	075714	Positioning barrel screws
5	428260	Kit: FastConnect
6	428292	Kit: Duramax Hyamp robotic torch lead, 7.6 m (25')
7	228109	Kit: Cap-sensor switch
	228806	Kit: Robotic torch clamp assembly

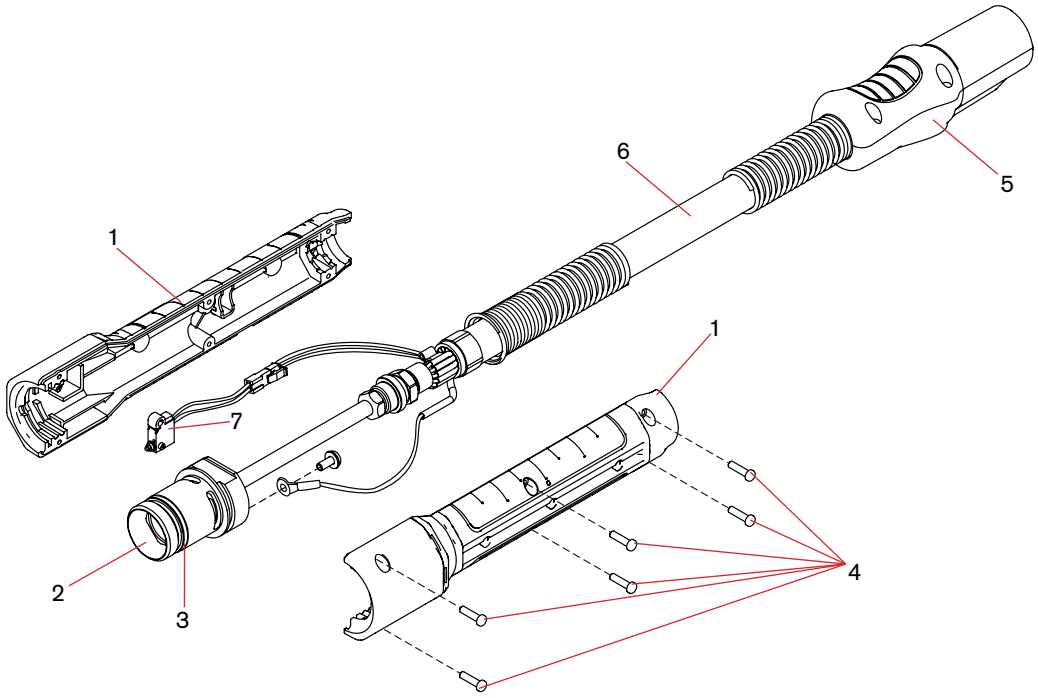

Duramax® Hyamp™ 90° robotic torch parts

For use with the Powermax125®

Duramax Hyamp 90° robotic torch assembly

The entire Duramax Hyamp 90° robotic torch assembly with leads can be replaced, or individual component parts can be replaced. Please note Duramax Hyamp torches and consumables are also compatible for use with Powermax45 XP/65/85/105 systems.

Item	Kit/Part number	Description
	059565	Duramax Hyamp 90° robotic torch assembly with leads, 7.6 m (25')
	059671	Duramax Hyamp robotic torch, 90°, 15.2 m (50') lead
1	428294	Kit: Duramax Hyamp 90° robotic torch barrel
2	428297	Kit: Duramax Hyamp 90° robotic torch main body
3	428253	Kit: Duramax Hyamp o-ring (5)
4	075714	Positioning barrel screws
5	428260	Kit: FastConnect
6	428292	Kit: Duramax Hyamp robotic torch lead, 7.6 m (25')
7	228109	Kit: Cap-sensor switch
	228806	Kit: Robotic torch clamp assembly

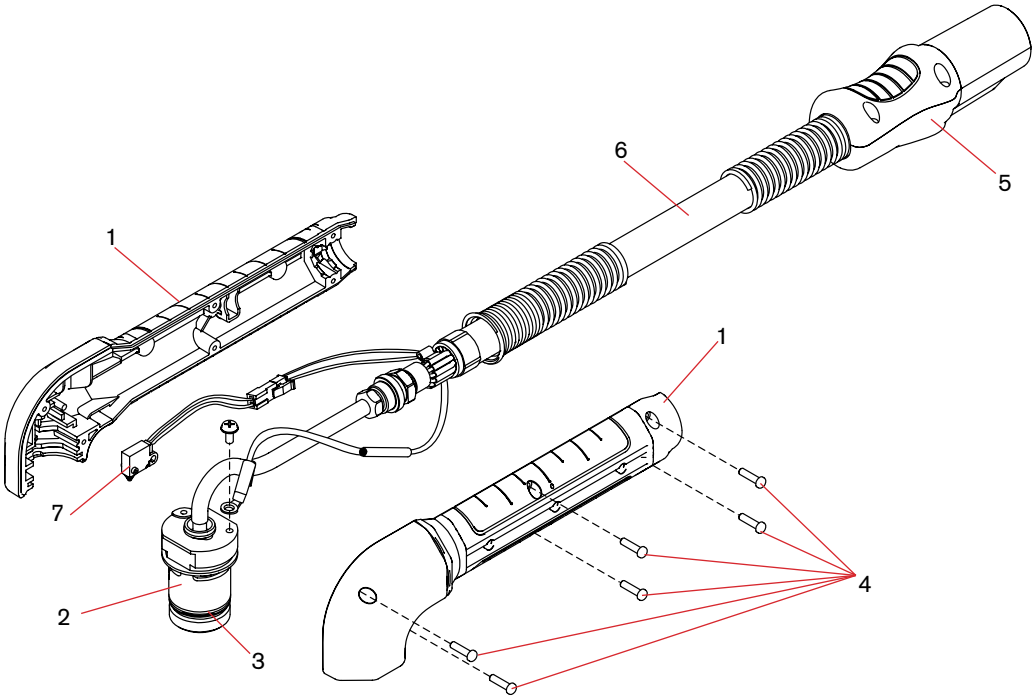

Duramax® Hyamp™ 45° robotic torch parts

For use with the Powermax125®

Duramax Hyamp 45° robotic torch assembly

The entire Duramax Hyamp 45° robotic torch assembly with leads can be replaced, or individual component parts can be replaced. Please note Duramax Hyamp torches and consumables are also compatible for use with Powermax45 XP/65/85/105 systems.

Item	Kit/Part number	Description
	059564	Duramax Hyamp 45° robotic torch assembly with leads, 7.6 m (25')
	059670	Duramax Hyamp robotic torch, 45°, 15.2 m (50') lead
1	428293	Kit: Duramax Hyamp 45° robotic torch barrel
2	428296	Kit: Duramax Hyamp 45° robotic torch main body
3	428253	Kit: Duramax Hyamp o-ring (5)
4	075714	Positioning barrel screws
5	428260	Kit: FastConnect
6	428292	Kit: Duramax Hyamp robotic torch lead, 7.6 m (25')
7	228109	Kit: Cap-sensor switch
	228806	Kit: Robotic torch clamp assembly

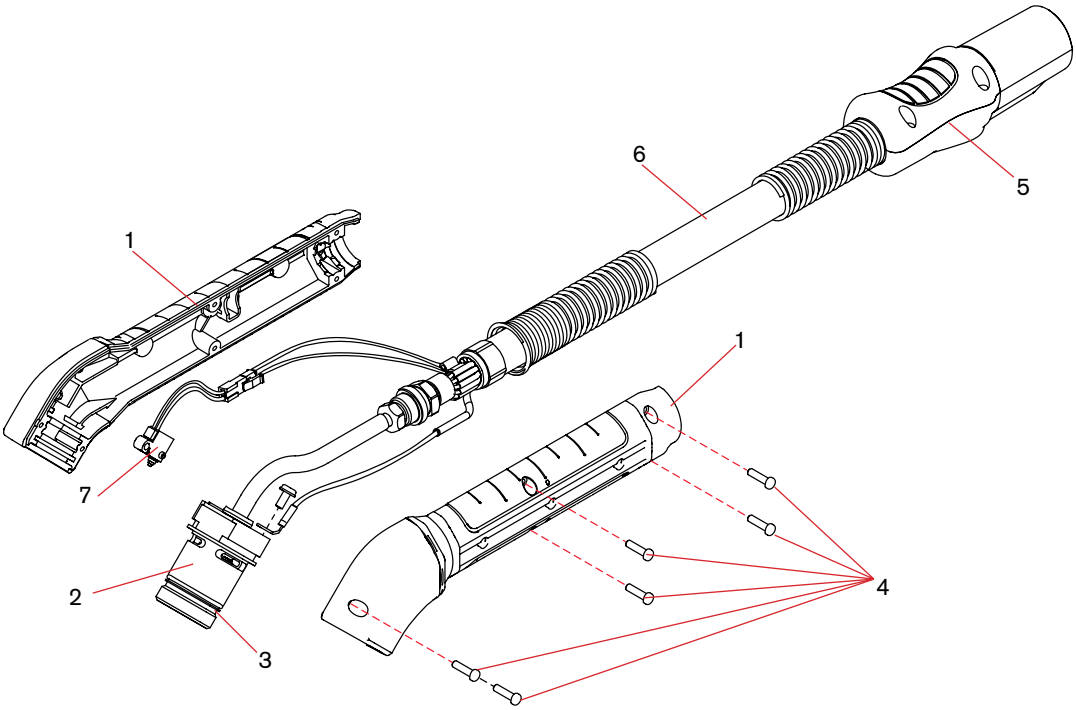

Duramax® Hyamp™ 45° Long hand torch replacement parts

For use with the Powermax125®

Duramax Hyamp 45° Long hand torch assembly – external components

The entire Duramax Hyamp 45° Long hand torch assembly with leads can be replaced, or individual component parts can be replaced. Please note Duramax Hyamp torches and consumables are also compatible for use with Powermax45 XP/65/85/105 systems.

Item	Kit/Part number	Description
	059562	Duramax Hyamp 45° long handheld torch assembly with 0.6 m (2') extension and 7.6 m (25') lead
	059579	Duramax Hyamp 45° long handheld torch assembly with 0.6 m (2') extension and 15 m (50') lead
	059567	Duramax Hyamp 45° long handheld torch assembly with 1.2 m (4') extension and 7.6 m (25') lead
	059581	Duramax Hyamp 45° long handheld torch assembly with 1.2 m (4') extension and 15 m (50') lead
	059667[1]	Duramax Hyamp 45° long handheld torch assembly with 1.2 m (4') extension and 45.7 m (150') lead
	059758	Duramax Hyamp long handheld torch, 45°, 1.8 m (6') extension, 7.6 m (25') lead
	059759	Duramax Hyamp long handheld torch, 45°, 1.8 m (6') extension, 7.6 m (50') lead
1	428278	Kit: Duramax Hyamp 45° long handheld torch front shell
2	428280	Kit: Duramax Hyamp long handheld torch extension tube, 0.6 m (2')
2	428281	Kit: Duramax Hyamp long handheld torch extension tube, 1.2 m (4')
2	428822	Kit: Duramax Hyamp long handheld torch cap-sensor switch, 1.8 m (6')
2	059587	Kit: Duramax Hyamp long handheld torch extension tube, 1.8 m (6')
2	428820	Duramax Hyamp long handheld torch extension tube, 1.8 m (6')
3	428286	Kit: Duramax Hyamp long handheld torch auxiliary handle (with screws)
4	428287	Kit: Duramax Hyamp torch handle screws
5	428156	Kit: Duramax Hyamp hand torch trigger (with spring)
6	428277	Kit: Duramax Hyamp long handheld torch handle
7	428260	Kit: Duramax and Duramax Hyamp torch FastConnect

[1]This torch is only compatible with Powermax125s built after November 14, 2017 (serial number 125-007944 or higher) or that have had the DSP board replaced with a board built after this date.

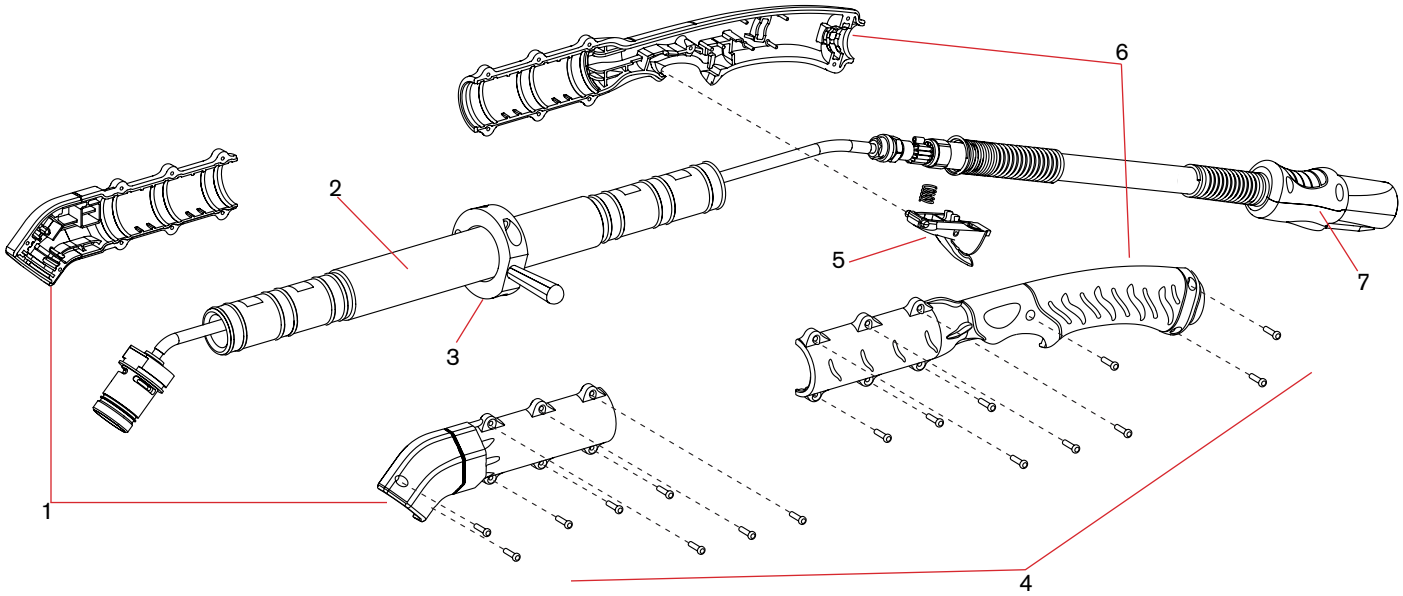

Duramax® Hyamp™ 45° Long hand torch replacement parts (continued)

For use with the Powermax125®

Duramax® Hyamp™ 45° Long hand torch assembly – internal components

Please note Duramax Hyamp torches and consumables are also compatible for use with Powermax45 XP/65/85/105 systems.

Item	Kit/Part number	Description
1	428288	Kit: Duramax Hyamp long handheld torch cap-sensor switch, 0.6 m (2')
1	428289	Kit: Duramax Hyamp long handheld torch cap-sensor switch, 1.2 m (4')
2	428282	Kit: Duramax Hyamp 45° long handheld torch body (torch head plus gas tube), 0.6 m (2') – includes pilot arc wire, cap-sensor switch, and foam strips
2	428284	Kit: Duramax Hyamp 45° long handheld torch body (torch head plus gas tube), 1.2 m (4') – includes pilot arc wire, cap-sensor switch, and foam strips
2	428822	Kit: Duramax Hyamp long handheld torch cap-sensor switch, 1.8 m (6')
3	428253	Kit: Duramax Hyamp O-ring (5)
4	428290	Kit: Duramax Hyamp long handheld torch pilot arc wire (with screws), 0.6 m (2')
4	428291	Kit: Duramax Hyamp long handheld torch pilot arc wire (with screws), 1.2 m (4')
5	428162	Kit: Duramax Hyamp hand torch start switch
6	428159	Kit: Duramax and Duramax Hyamp hand torch lead, 7.6 m (25')
6	428160	Kit: Duramax and Duramax Hyamp hand torch lead, 15 m (50')
6	428762	Kit: Duramax Hyamp hand torch lead, 45.7 m (150')

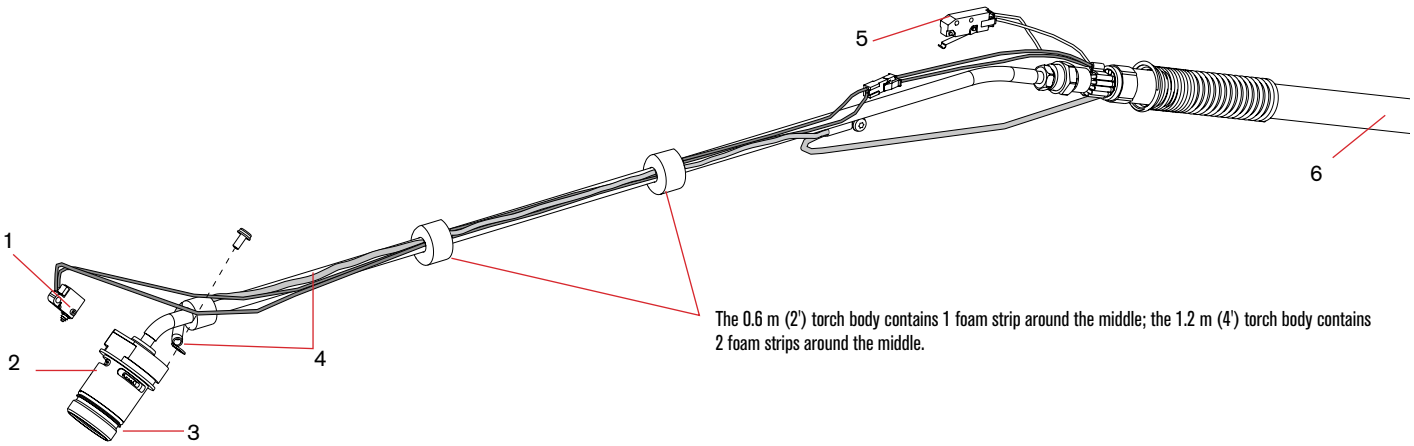

Duramax® Hyamp™ 90° Long hand torch replacement parts

For use with the Powermax125®

Duramax Hyamp 90° Long hand torch assembly – external components

The entire Duramax Hyamp 90° Long hand torch assembly with leads can be replaced, or individual component parts can be replaced. Please note Duramax Hyamp torches and consumables are also compatible for use with Powermax45 XP/65/85/105 systems.

Item	Kit/Part number	Description
	059563	Duramax Hyamp 90° long handheld torch assembly with 0.6 m (2') extension and 7.6 m (25') lead
	059580	Duramax Hyamp 90° long handheld torch assembly with 0.6 m (2') extension and 15 m (50') lead
	059568	Duramax Hyamp 90° long handheld torch assembly with 1.2 m (4') extension and 7.6 m (25') lead
	059582	Duramax Hyamp 90° long handheld torch assembly with 1.2 m (4') extension and 15 m (50') lead
	059668[1]	Duramax Hyamp 90° long handheld torch assembly with 1.2 m (4') extension and 45.7 m (150') lead
	059623	Duramax Hyamp 90° long handheld torch assembly with 1.8 m (6') extension and 7.5 m (25') lead
	059624	Duramax Hyamp 90° long handheld torch assembly with 1.8 m (6') extension and 15 m (50') lead
1	428279	Kit: Duramax Hyamp 90° long handheld torch front shell
2	428280	Kit: Duramax Hyamp long handheld torch extension tube, 0.6 m (2')
2	428281	Kit: Duramax Hyamp long handheld torch extension tube, 1.2 m (4')
2	428820	Duramax Hyamp long handheld torch extension tube, 1.8 m (6')
3	428286	Kit: Duramax Hyamp long handheld torch auxiliary handle (with screws)
4	428287	Kit: Duramax Hyamp torch handle screws
5	428156	Kit: Duramax Hyamp hand torch trigger (with spring)
6	428277	Kit: Duramax Hyamp long handheld torch handle
7	428260	Kit: Duramax and Duramax Hyamp torch FastConnect

[1]This torch is only compatible with Powermax125s built after November 14, 2017 (serial number 125-007944 or higher) or that have had the DSP board replaced with a board built after this date.

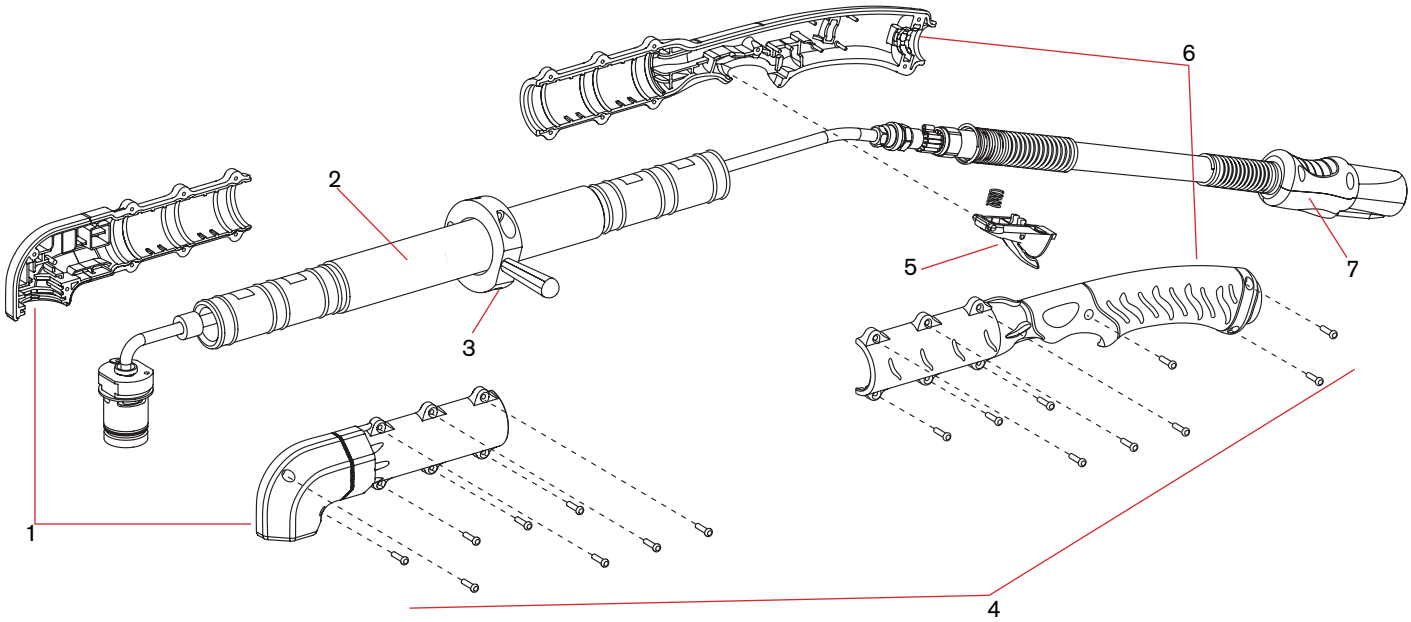

Duramax® Hyamp™ 90° Long hand torch replacement parts (continued)

For use with the Powermax125®

Duramax® Hyamp™ 90° Long hand torch assembly – internal components

Please note Duramax Hyamp torches and consumables are also compatible for use with Powermax45 XP/65/85/105 systems.

Item	Kit/Part number	Description
1	428288	Kit: Duramax Hyamp long handheld torch cap-sensor switch, 0.6 m (2')
1	428289	Kit: Duramax Hyamp long handheld torch cap-sensor switch, 1.2 m (4')
2	428283	Kit: Duramax Hyamp 90° long handheld torch body (torch head plus gas tube), 0.6 m (2') – includes pilot arc wire, cap-sensor switch, and foam strips
2	428285	Kit: Duramax Hyamp 90° long handheld torch body (torch head plus gas tube), 1.2 m (4') – includes pilot arc wire, cap-sensor switch, and foam strips
2	428822	Kit: Duramax Hyamp long handheld torch cap-sensor switch, 1.8 m (6')
2	428821	Kit: Duramax Hyamp 90° long handheld torch body (torch head plus gas tube), 1.8 m (6') – includes pilot arc wire, cap-sensor switch, and foam strips
3	428253	Kit: Duramax Hyamp O-ring (5)
4	428290	Kit: Duramax Hyamp long handheld torch pilot arc wire (with screws), 0.6 m (2')
4	428291	Kit: Duramax Hyamp long handheld torch pilot arc wire (with screws), 1.2 m (4')
4	428823	Kit: Duramax Hyamp long handheld torch pilot arc wire (with screws), 1.8 m (6')
5	428162	Kit: Duramax Hyamp hand torch start switch
6	428159	Kit: Duramax and Duramax Hyamp hand torch lead, 7.6 m (25')
6	428160	Kit: Duramax and Duramax Hyamp hand torch lead, 15 m (50')
6	428762	Kit: Duramax Hyamp hand torch lead, 45.7 m (150')

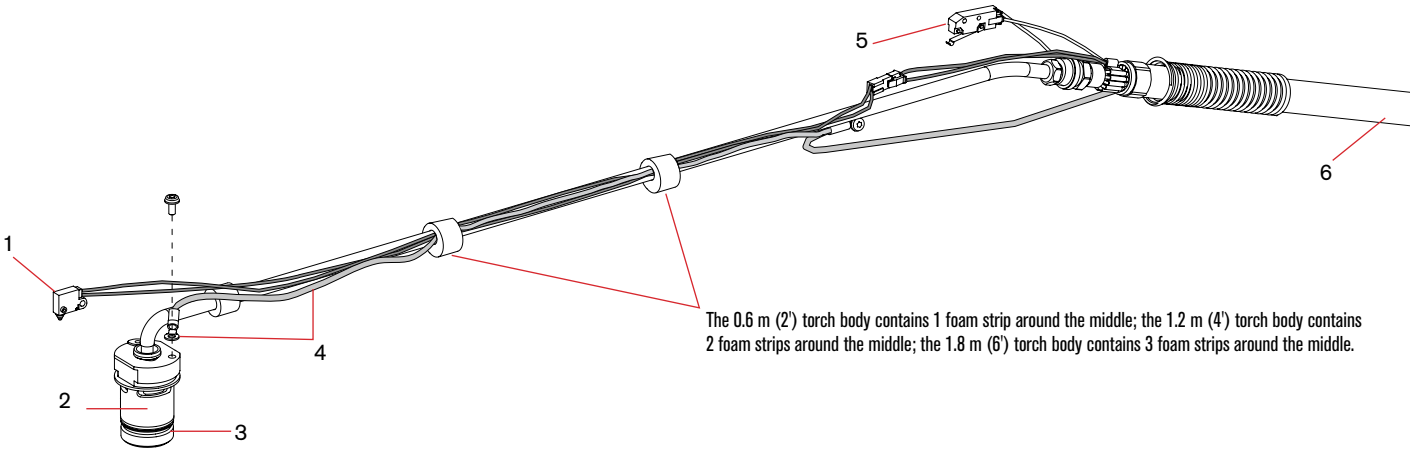

The 0.6 m (2') torch body contains 1 foam strip around the middle; the 1.2 m (4') torch body contains 2 foam strips around the middle; the 1.8 m (6') torch body contains 3 foam strips around the middle.

Powermax 125

Powermax cartridge upgrade options

Compatibility

Powermax cartridge adapters enable conversion to the cartridge consumable platform if you have the following systems and torch types.

System	Torch type	Adapter part number
Powermax45® XP	Duramax® Lock and Duramax hand mechanized and robotic	428951
Powermax65®	Duramax hand, mechanized and robotic	
Powermax85®		
Powermax105®		
Powermax125®	Duramax Hyamp hand, mechanized, and robotic	528160

- Not recommended for use on Duramax retrofit torches for Powermax1000/1250/1650
- The cartridge consumable platform is standard for the Powermax45/65/85/105 SYNC® systems with SmartSYNC™ torches (no adapter required)

System	Torch type	Part number
Powermax45® XP Powermax65® Powermax85® Powermax105® Powermax125®	Cartridge HRT 75° hand torch w/7.6 m (25') lead	059920
	Cartridge MRT 180° machine torch w/15.2 m (50') lead	059930
	Cartridge MRT 180° mini machine/robotic torch w/15.2 m (50') lead	059940

The easy to identify cartridges are color coded by process to eliminate consumable part mix-ups and are clearly marked for amperage and part number. Cartridges are mixed material recyclable.

Powermax cartridge adapters are designed to support several cartridge change-outs. Periodically inspect and remove the adapter from the torch to check for cracking and thread wear to determine when to replace.

The standard adapter adds 0.69" (18 mm) to the operational length of the Duramax and Duramax Lock torch.

The Hyamp adapter adds 1.31" (33 mm) to the operational length of the Duramax Hyamp torch.

When using Powermax cartridge on an adapter, no data is transferred from the cartridge to the system for automated process setup or to provide cartridge usage data. That functionality is available for Powermax SYNC systems with SmartSYNC torch technology.*

*SmartSYNC torches are not compatible with Powermax45 XP/65/85/105 A systems

Not to scale

Powermax cartridges

Drag cutting and FineCut® for hand torches

Hypertherm cartridges		Replaces this stack-up				
Process	Cartridge	Shield	Retaining cap	Nozzle	Electrode	Swirl ring
Hyamp	528162	420000	220977	220975	220971	220997
105 A	428937	220992	220854	220990	220842	220994
85 A	428935	220818		220816		220857
65 A	428931			220819		
45 A	428927			220941		
FineCut drag cutting	428928	220931		220930		220947

Mechanized and FineCut for machine torches

Hypertherm cartridges		Replaces this stack-up				
Process	Cartridge	Shield	Retaining cap	Nozzle	Electrode	Swirl ring
Hyamp	528161	220976	220977 or 420156 (Ohmic)	220990	220971	220997
105 A	428936	220993	220854 or 220953 (Ohmic)	220990	220842 or 220777 (CopperPlus®)	220994
85 A	428934	220817 or 220955 (Deflector)		220816		220857
65 A	428930			220819		
45 A	428925			220941		
FineCut mechanized cutting	428926	220948 or 220955 (Deflector)		220930	220842	220947
Ohmic ring	Kit 428895 Qty (3) rings per kit					

Reference the cut charts guide for cartridge adapter on Duramax® torches 811300MU.
Mechanized cartridges can be used on hand torches if a stand-off is desired.

Max removal and max control gouging

Hypertherm cartridges		Replaces this stack-up				
Process	Cartridge	Shield	Retaining cap	Nozzle	Electrode	Swirl ring
Max removal gouging 105 A	428938	220798	220854	220991	220842	220994
Max removal gouging 45–85 A	428932			220797		220857
Max control gouging 105 A	428939	420480		220991		220994
Max control gouging 45–85 A	428933			220797		220857

Applications

Hypertherm cartridges	
Process	Cartridge
HyAccess drag cutting 65 A	428984
HyAccess mechanized cutting 65 A	528079
HyAccess gouging 65 A	428987
FlushCut 105 A	428954
FlushCut 85 A	428953
FlushCut 65 A	428952
HyPilot mechanized cutting 105 A	528157

Powermax® cartridges are manufactured to uphold our high standards for quality and reliability. As part of the manufacturing process, we test-fire each cartridge to ensure proper assembly and function. As a result, there may be burn marks on the tip of the cartridge. This is normal and not a sign of damage.

Powermax30®

T30v hand torch consumables

Minimum order quantity			1	1	5	5	1
Consumable type	**Torch type**	**Amperage**	**Shield[1]**	**Retaining cap**	**Nozzle**	**Electrode**	**Swirl ring**
Drag cutting	Hand	30	220569	220483	220480	220478	220479

Minimum order quantity		1	1	1	1
Consumable type	**Torch type**	**Retaining cap**	**Nozzle**	**Electrode**	**Swirl ring**
HyAccess drag cutting (15–30 A)	Hand	420148	420144	420137	220670
HyAccess gouging (15–30 A)			420147		

Quantity in kit		1	1	1	2	1
HyAccess kit – 428337 (15–30 A)	Hand	420148	420144 (cutting)	420147 (gouging)	420137	420211

T30v hand torch parts

For use with the Powermax30®

T30v hand torch parts

Item	Kit/Part number	Description
	088001[1]	T30v hand torch assembly with 4.5 m (15') leads
1	228112	Kit: T30v main body
2	058503	O-ring: Viton .626 x .070
3	228109	Kit: Cap-off sensor
4	228111	Kit: T30v torch handle
5	075339	Handle screws
6	002244	Safety trigger
7	027254	Spring
8	228113	Kit: T30v 4.5 m (15') torch lead
9	128642	Kit: T30v start switch
	123868	Work lead with clamp, 4.5 m (15')

[1]Assembly includes consumables

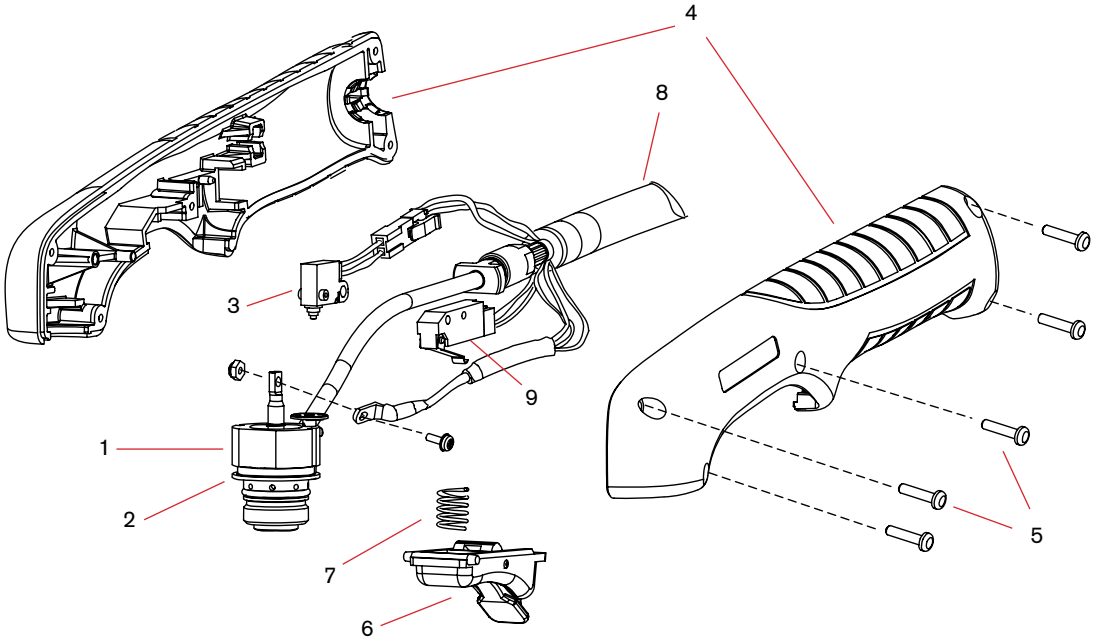

Powermax45®

T45v/T45m hand/machine torch consumables

30 A

45 A

Minimum order quantity		1	1	5	5	1
Consumable type	**Torch type**	**Shield/deflector**	**Retaining cap**	**Nozzle**	**Electrode**	**Swirl ring**
Drag cutting (15–45 A)	Hand	220569 (30 A)[1]	220483 (30 A)[1]	220480 (30 A)[1]	220478 (30 A)[1]	220479 (30 A)[1]
		220674 (45 A)	220713 (45 A)	220671 (45 A)[2]	220669 (45 A)[2]	220670 (45 A)

Quantity in kit		2	1	1	6	7	1	7	1
Essential cutting kit – 851478 CSA (15–45 A)	Hand	220674	220717 (Deflector)[3]	220713		220671	220718 (Unshielded)	220669	220670
Essential cutting kit – 851477 CE (15–45 A)					220671				

[1]Use T30v 30 A consumables for fine feature cutting on thin metals.
[2]Consumable available in bulk packaging. See order information below.
[3]Components are unique to the CSA kit, part number 851478.

Minimum order quantity		1	1	5	5	1
Consumable type	**Torch type**	**Shield/deflector**	**Retaining cap**	**Nozzle**	**Electrode**	**Swirl ring**
Mechanized (15–45 A)	Machine	220673	220713 or 220719 (ohmic)	220671[2]	220669[2]	220670

[2]Consumable available in bulk packaging. See order information below.

Minimum order quantity		1	1	5	5	1
Consumable type	**Torch type**	**Shield/deflector**	**Retaining cap**	**Nozzle**	**Electrode**	**Swirl ring**
Gouging[5] (15–45 A)	Hand/Machine	220675	220713	220672	220669[2]	220670

[2]Consumable available in bulk packaging. See order information below.

Minimum order quantity		1	1	5	5	1
Consumable type	**Torch type**	**Shield/deflector**	**Retaining cap**	**Nozzle**	**Electrode**	**Swirl ring**
Unshielded[3] (15–45 A)	Hand/Machine	220717	220713	220718	220669[2]	220670

[2]Consumable available in bulk packaging. See order information below.
[3]In countries following CE standards, unshielded consumables may only be used in mechanized applications.

Powermax45® (continued)

T45v/T45m hand/machine torch consumables

Minimum order quantity		1	1		1	1
Consumable type	**Torch type**	**Retaining cap**	**Nozzle**		**Electrode**	**Swirl ring**
HyAccess drag cutting (15–45 A)	Hand	420148	420144		420137	220670
HyAccess gouging (15–45 A)			420147			
Quantity in kit		1	1	1	2	1
HyAccess kit – 428337 (15–45 A)	Hand	420148	420144 (cutting)	420147 (gouging)	420137	420211[4]

T45v/T45m consumable bulk kits

Order quantity	25	25
Contents	220671 nozzle	220669 electrode
Bulk pack PN	228843 nozzle	228844 electrode

T45v hand torch parts

For use with the Powermax45®

T45v hand torch parts

Item	Kit/Part number	Description
	088008[1]	T45v hand torch assembly with 6.1 m (20') leads
	088009[1]	T45v hand torch assembly with 15.2 m (50') leads
1	228346	Kit: Torch body replacement
2	058503	O-ring: torch body
3	228109	Kit: Cap-sensor switch replacement
4	228313	Kit: handle
5	075714	Handle screws
6	002244	Safety trigger assembly
7	027254	Spring
8	228315	Kit: Torch lead replacement, 6.1 m (20')
9	228316	Kit: Torch lead replacement, 15.2 m (50')
	228300	Work lead with clamp, 6.1 m (20')
	228307	Work lead with clamp, 15.2 m (50')
10	128642	Kit: T45v/T30v start switch replacement

[1]Assembly includes consumables.

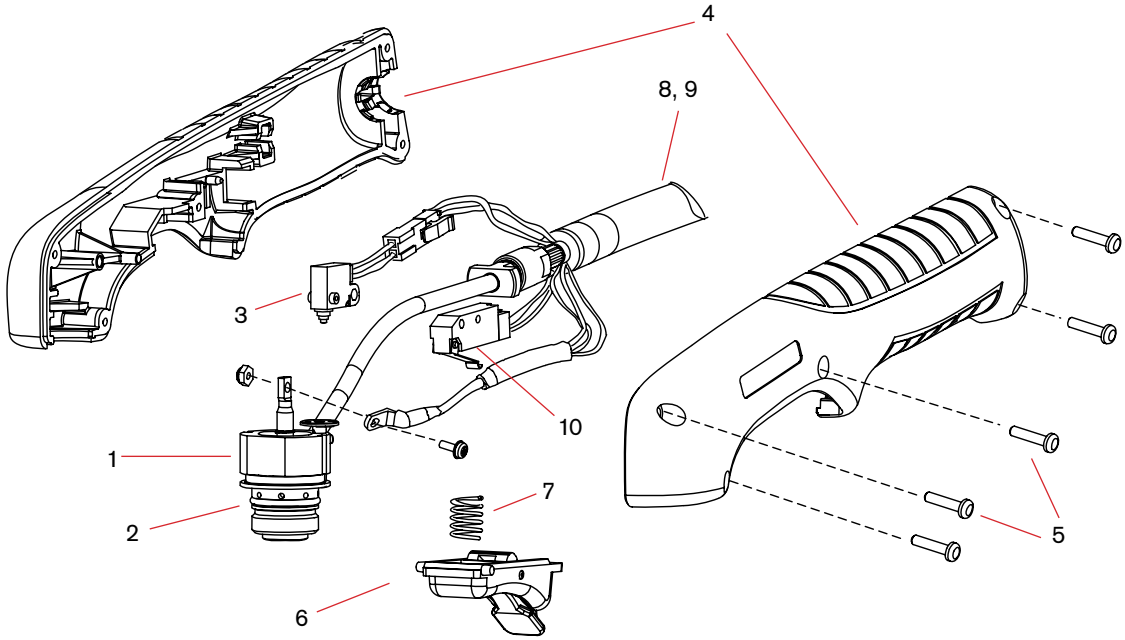

T45m machine torch parts

For use with the Powermax45®

T45m machine torch parts

Item	Kit/Part number	Description
	088010[1]	T45m machine torch assembly with 7.6 m (25') leads
	088011[1]	T45m machine torch assembly with 10.7 m (35') leads
	088012[1]	T45m machine torch assembly with 15.2 m (50') leads
1	228228	Kit: T45m positioning sleeve
2	228229	Kit: T45m removable gear rack
3	228322	Kit: Front mounting ring
4	228323	Kit: Rear mounting ring
5	228320	Kit: T45m torch body replacement
6	228321	Kit: T45m cap-sensor switch replacement
7	058503	O-ring: torch body
8	228317	T45m torch lead replacement, 7.6 m (25')
9	228318	T45m torch lead replacement, 10.7 m (35')
10	228319	T45m torch lead replacement, 15.2 m (50')
	128650	On/Off pendant for machine torch, 7.6 m (25')
	128651	On/Off pendant for machine torch, 15.2 m (50')
	128652	On/Off pendant for machine torch, 22.8 m (75')
	228300	Work lead with clamp, 6.1 m (20')
	228307	Work lead with clamp, 15.2 m (50')

[1]Assembly includes consumables.

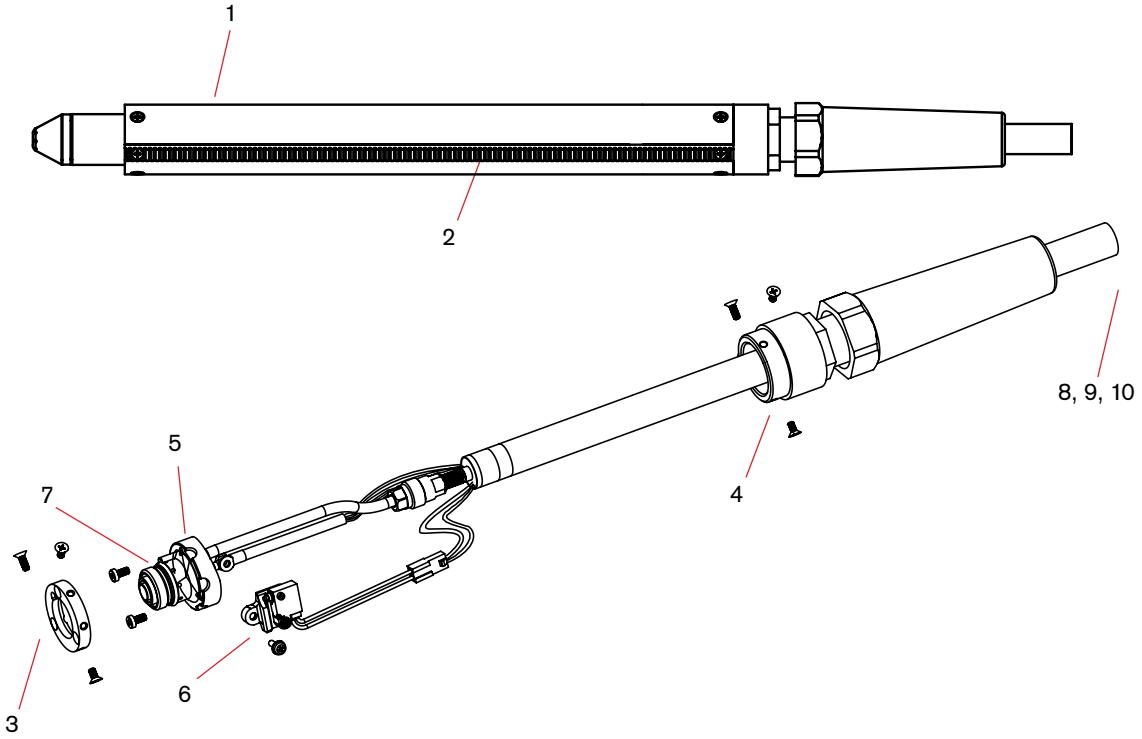

Powermax45 XP/65/85/105®

Please note Duramax consumables are also compatible for use with the MAX42, MAX43, Powermax600, Powermax800, Powermax900, Powermax1000, Powermax1250, and Powermax1650 using Duramax RT torches. Duramax consumables are also compatible with the Powermax45 using the optional Duramax torch.

Minimum order quantity		1	1	5	5	1
Consumable type	**Torch type**	**Shield/deflector**	**Retaining cap**	**Nozzle**	**Electrode**	**Swirl ring**
Drag cutting (30–105 A)	Hand	220818[2] (45 A)	220854	220941[2] (45 A)	220842[2] or 220777[1,2]	220994
		220818[2] (65 A)		220819[2] (65 A)		
		220818[2] (85 A)		220816[2] (85 A)		
		220992[2] (105 A)		220990 (105 A)		
Quantity in kit		2	1	7	7	1
Essential cutting kit – 851471 (30–105 A)	Hand	220992	220854	220990	220842	220994

[1]For longer consumable life when cutting metal 1/2 inch (12 mm) and under, check out the CopperPlus electrode (part number 220777).
[2]Consumable available in bulk packaging. See order information below.

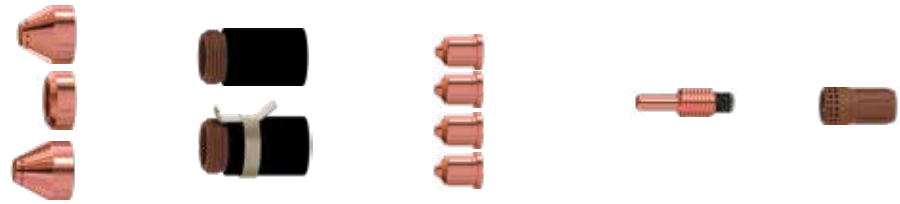

Minimum order quantity		1	1	5	5	1
Consumable type	**Torch type**	**Shield/deflector**	**Retaining cap**	**Nozzle**	**Electrode**	**Swirl ring**
Mechanized (30–105 A)	Machine	220817[2] or 220955[3] (45 A)	220854 or 220953 ohmic	220941[2] (45 A)	220842[2] or 220777[1,2]	220994
		220817[2] or 220955[3] (65 A)		220819[2] (65 A)		
		220817[2] or 220955[3] (85 A)		220816[2] (85 A)		
		220993[2] or 220955[3] (105 A)		220990[2] (105 A)		

Quantity in kit		1	1	1	1	7			4	3	1
Essential cutting kit – 851472	Machine	220817 (Shield)	220955 (Deflector)	220993 105 A (Shield)	220854 or 220953 ohmic	220990 (85–105 A)	220819 (65 A)	220816 (85 A)	220842 (Cutting)	220777 (CopperPlus)	220994

[1]For longer consumable life when cutting metal 1/2 inch (12 mm) and under, check out the CopperPlus electrode (part number 220777).
[2]Consumable available in bulk packaging. See order information below.
[3]Deflector for unshielded cutting.

Minimum order quantity		1	1	5	5	1
Consumable type	**Torch type**	**Shield/deflector**	**Retaining cap**	**Nozzle**	**Electrode**	**Swirl ring**
Max removal gouging[4] (45–105 A)	Hand/Machine	220798	220854	220797 (45 A)	220842[2]	220994
				220797 (65 A)		
Max control gouging[5] (45–105 A)	Hand/Machine	420480		220797 (85 A)		
				220991 (105 A)		

[2]Consumable available in bulk packaging. See order information below.
[4]The Max removal gouging shield is designed for aggressive metal removal, deep gouge profiles and extreme metal washing.
[5]The Max control gouging shield is designed for more precise metal removal, shallower gouge profiles and light metal washing.

Powermax45 XP/65/85/105® (continued)

Please note Duramax consumables are also compatible for use with the MAX42, MAX43, Powermax600, Powermax800, Powermax900, Powermax1000, Powermax1250, and Powermax1650 using Duramax RT torches. Duramax consumables are also compatible with the Powermax45 using the optional Duramax torch.

Minimum order quantity		1	1	5	5	1
Consumable type	**Torch type**	**Shield/deflector**	**Retaining cap**	**Nozzle**	**Electrode**	**Swirl ring**
FineCut® (30–45 A)	Hand	220931	220854 or 220953 (ohmic)	220930[2]	220842[2]	220947
	Machine	220955 or 220948 (ohmic)				

[2]Consumable available in bulk packaging. See order information below.

Minimum order quantity		1	1	1	1
Consumable type	**Torch type**	**Retaining cap**	**Nozzle**	**Electrode**	**Swirl ring**
HyAccess drag cutting (30–65 A)	Hand	420413	420410	420408	220857 or 220994
HyAccess gouging (30–65 A)			420412		

Quantity in kit		1	1	1	2	1
HyAccess kit – 428414 (30–65 A)	Hand	420413	420410 (cutting)	420412 (gouging)	420408	220857
		HyAccess cutting only starter pack – 428445[6] HyAccess gouging only starter pack – 428446[7]				

Warning: The Duramax HyAccess (65 amps and below) consumables should not be operated above 65 amps
[6]Starter pack contains 1 retaining cap (420413), 1 cutting nozzle (420410) and 1 electrode (420408)
[7]Starter pack contains 1 retaining cap (420413), 1 gouging nozzle (420412) and 1 electrode (420408)

Minimum order quantity		1	1	1	5	1
Consumable type	**Torch type**	**Retaining ring**	**Retaining cap**	**Nozzle/shield assembly**	**Electrode**	**Swirl ring**
FlushCut (30–45 A)[2]	Hand/Machine	420540	420536	420633	420635	420634
FlushCut (65–105 A)[2]	Hand/Machine	420540	420536	420533	220842 or 220777[1]	420539
Quantity in kit		1	1	1	1	1
FlushCut kit – 428647 (65–105 A)	Hand/Machine	420540	420536	420533	220842	420539

[1]For longer consumable life when cutting metal 1/2 inch (12 mm) and under, check out the CopperPlus electrode (part number 220777).
[2]Using the 45 amp FlushCut consumables on the Powermax105 above 45 amps will cause premature consumable damage.

Duramax® consumable bulk kits

Order quantity	25	25	25	25	25			25	25	10	10	10	10
Bulk kit part number	**228934**	**228767**	**228760**	**228759**	**228761**	**228762**	**228765**	**228797**	**228796**	**228798**	**228799**	**228763**	**228764**
Contents	220777 electrode	220842 electrode	220816 nozzle	220819 nozzle	220930 nozzle	220797 nozzle	220941 nozzle	220990 nozzle	220991 nozzle	220992 shield	220993 shield	220817 shield	220818 shield

Upgrade to the revolutionary Powermax cartridge for Powermax® systems consumable platform with the installation of a retrofit torch or adapter. See pages 34–35 to learn more.

Duramax® 75° hand torch parts

For use with the Powermax45® XP, and Powermax65/85/105. The Duramax torch series is an optional torch upgrade for Powermax45 systems.

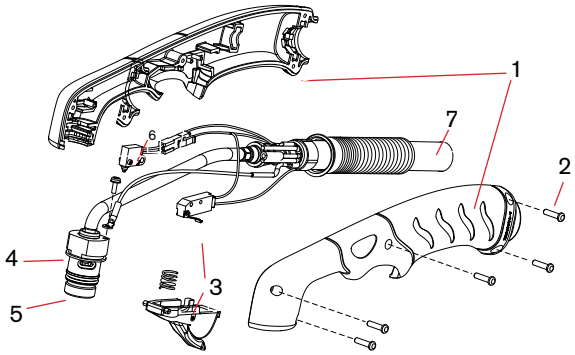

Duramax 75° hand torch assembly

Item	Kit/Part number	Description
	059473	Duramax 75° hand torch assembly with 7.6 m (25') lead
	059474	Duramax 75° hand torch assembly with 15.2 m (50') lead
	059475	Duramax 75° hand torch assembly with 22.8 m (75') lead
1	228954	Kit: Duramax 75°/HRT Torch handle replacement
2	075714	Handle screws, #4 x 1/2 slotted TORX pan head, S/B
3	228721	Kit: Duramax 75°/Duramax 15°/HRT/HRTs (spring and trigger assembly)
4	228714	Kit: Duramax 75° Torch main body replacement (3/8" coupler)
4	228958	Kit: Duramax 75° Torch main body replacment (1/2" coupler)
5	058519	O-ring
6	228719	Kit: Duramax 75° Cap-sensor switch replacement
7	228959	Kit: Duramax 75° Torch lead replacement, 7.6 m (25')
7	228960	Kit: Duramax 75° Torch lead replacement, 15.2 m (50')
	228300	Work lead with clamp, 6.1 m (20')
	228307	Work lead with clamp, 15.2 m (50')

Duramax® 15° hand torch parts

For use with the Powermax45® XP, and Powermax65/85/105. The Duramax torch series is an optional torch upgrade for Powermax45 systems.

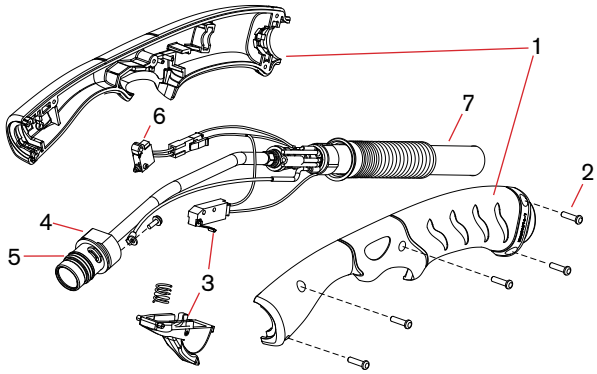

Duramax 15° hand torch assembly

Item	Kit/Part number	Description
	059470	Duramax 15° hand torch assembly with 7.6 m (25') lead
	059471	Duramax 15° hand torch assembly with 15.2 m (50') lead
	059472	Duramax 15° hand torch assembly with 22.8 m (75') lead
1	228955	Kit: Duramax 15° Torch handle replacement
2	075714[1]	Handle screws, #4 x 1/2 slotted TORX pan head, S/B
3	228721	Kit: Duramax 15°/Duramax 75°/HRT/HRTs (spring and trigger assembly)
4	228715[1]	Kit: Duramax 15° Torch main body replacement (3/8" coupler)
4	228957[1]	Kit: Duramax 15° Torch main body replacement (1/2" coupler)
5	058519	O-ring
6	228109	Kit: Duramax 15° Cap-sensor switch replacement
7	228959[1]	Kit: Duramax 15° Torch lead replacement, 7.6 m (25')
7	228960[1]	Kit: Duramax 15° Torch lead replacement, 15.2 m (50')
	228300	Work lead with clamp, 6.1 m (20')
	228307	Work lead with clamp, 15.2 m (50')

Duramax® 180° machine torch parts

For use with the Powermax45® XP, and Powermax65/85/105. The Duramax torch series is an optional torch upgrade for Powermax45 systems.

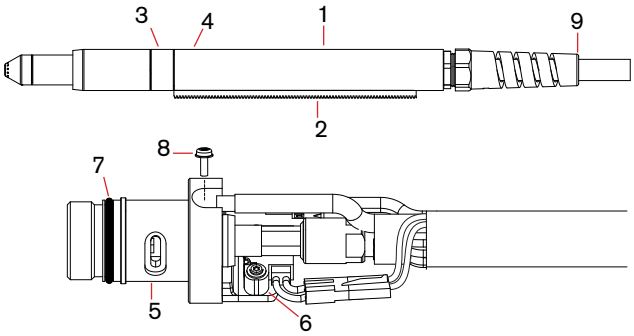

Duramax 180° machine torch assembly

Item	Kit/Part number	Description
	059476	Duramax 180° machine torch assembly with 4.5 m (15') lead
	059477	Duramax 180° machine torch assembly with 7.6 m (25') lead
	059478	Duramax 180° machine torch assembly with 10.7 m (35') lead
	059479	Duramax 180° machine torch assembly with 15.2 m (50') lead
	059480	Duramax 180° machine torch assembly with 22.8 m (75') lead
1	228737	Kit: Duramax 180° positioning sleeve
2	228738	Kit: Duramax 180° removable gear rack
3	228735	Kit: Duramax 180°/Duramax 180° torch front mounting sleeve
4	228736	Kit: Duramax 180°/Duramax 180° torch adapter ring (coupler)
5	228716	Kit: Duramax 180°/Duramax 180° torch main body replacement
6	228720	Kit: Cap-sensor switch replacement
7	058519	O-ring
8	075504	Pilot terminal screw
9	228730	Kit: Duramax 180°/Duramax 180° torch lead replacement, 4.5 m (15')
9	228731	Kit: Duramax 180°/Duramax 180° torch lead replacement, 7.6 m (25')
9	228732	Kit: Duramax 180°/Duramax 180° torch lead replacement, 10.7 m (35')
9	228733	Kit: Duramax 180°/Duramax 180° torch lead replacement, 15.2 m (50')
	228300	Work lead with clamp, 6.1 m (20')
	228307	Work lead with clamp, 15.2 m (50')

Duramax® 180° mini machine torch parts

For use with the Powermax45® XP, and Powermax65/85/105. The Duramax torch series is an optional torch upgrade for Powermax45 systems.

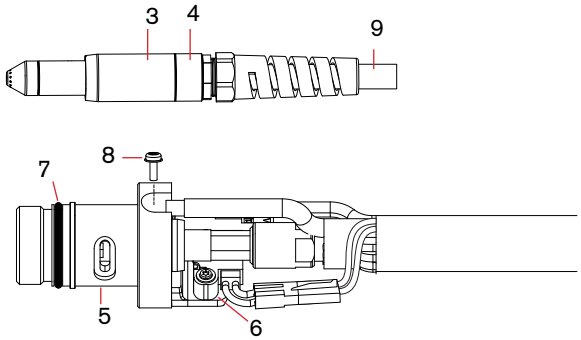

Duramax 180° mini torch assembly

Item	Kit/Part number	Description
	059481	Duramax 180° mini machine torch assembly with 4.5 m (15') lead
	059482	Duramax 180° mini machine torch assembly with 7.6 m (25') lead
	059483	Duramax 180° mini machine torch assembly with 10.7 m (35') lead
	059484	Duramax 180° mini machine torch assembly with 15.2 m (50') lead.
3	220956	Kit: Duramax 180°/Duramax 180° mini torch front mounting sleeve
4	220808	Kit: Duramax 180°/Duramax 180° mini torch adapter ring (coupler)
5	228716	Kit: Duramax 180°/Duramax 180° mini torch main body replacement
6	228720	Kit: Cap-sensor switch replacement
7	058519	O-ring
8	075504	Pilot terminal screw
9	228730	Kit: Duramax 180°/Duramax 180° mini torch lead replacement, 4.5 m (15')
9	228731	Kit: Duramax 180°/Duramax 180° mini torch lead replacement, 7.6 m (25')
9	228732	Kit: Duramax 180°/Duramax 180° mini torch lead replacement, 10.7 m (35')
9	228733	Kit: Duramax 180°/Duramax 180° mini torch lead replacement, 15.2 m (50')
	228300	Work lead with clamp, 6.1 m (20')
	228307	Work lead with clamp, 15.2 m (50')

Duramax® 180° robotic torch parts

For use with the Powermax45® XP, and Powermax65/85/105. The Duramax torch series is an optional torch upgrade for Powermax45 systems.

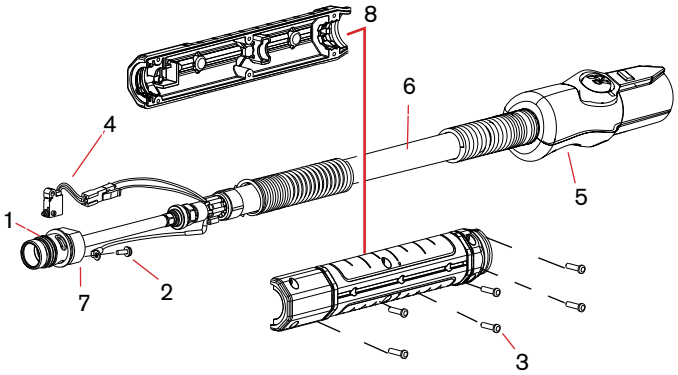

Duramax 180° robotic torch assembly

The entire Duramax 180° robotic torch assembly with leads can be replaced, or individual component parts can be replaced.

Item	Kit/Part number	Description
	059466	180° Duramax robotic torch assembly with 7.6 m (25') leads
	059587	180° Duramax robotic torch assembly with 15.2 m (50') lead
1	058519	O-ring
2	075504	Pilot terminal screw
3	075714	#4 x 1/2 slotted TORX pan head screws
4	228109	Kit: Cap-sensor switch replacement
5	428260	Kit: FastConnect replacement
6	228852	Kit: Robotic torch lead replacement, 7.6 m (25')
7	228853	Kit: 180° Robotic torch main body replacement
8	228856	Kit: 180° Robotic torch positioning barrel replacement
	228806	Kit: Robotic torch clamp assembly

Duramax® 90° robotic torch parts

For use with the Powermax45® XP, and Powermax65/85/105. The Duramax torch series is an optional torch upgrade for Powermax45 systems.

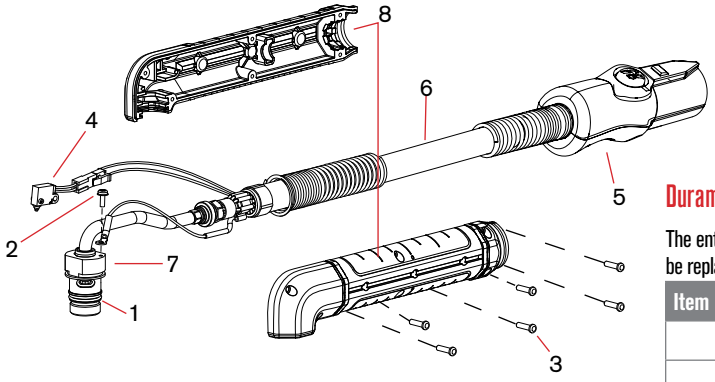

Duramax 90° robotic torch assembly

The entire Duramax 90° robotic torch assembly with leads can be replaced, or individual component parts can be replaced.

Item	Kit/Part number	Description
	059465	90° Duramax robotic torch assembly with 7.6 m (25') leads
	059586	90° Duramax robotic torch assembly with 15.2 m (50') lead
1	058519	O-ring
2	075504	Pilot terminal screw
3	075714	#4 x 1/2 slotted TORX pan head screws
4	228109	Kit: Cap-sensor switch replacement
5	428260	Kit: FastConnect replacement
6	228852	Kit: Robotic torch lead replacement, 7.6 m (25')
7	228854	Kit: 90° Robotic torch main body replacement
8	228857	Kit: 90° Robotic torch positioning barrel replacement
	228806	Kit: Robotic torch clamp assembly

Duramax® 45° robotic torch parts

For use with the Powermax45® XP, and Powermax65/85/105. The Duramax torch series is an optional torch upgrade for Powermax45 systems.

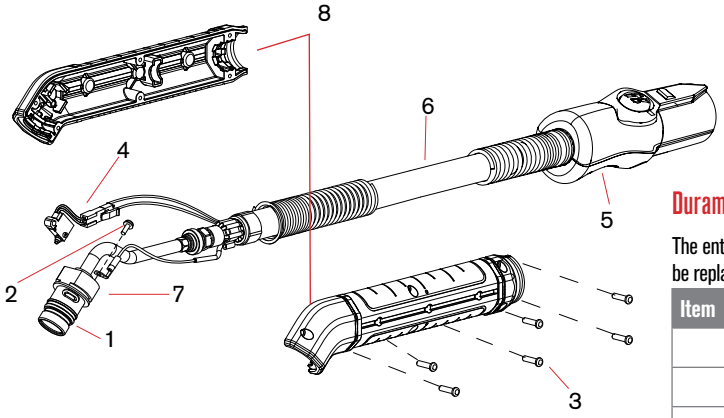

Duramax 45° robotic torch assembly

The entire Duramax 45° robotic torch assembly with leads can be replaced, or individual component parts can be replaced.

Item	Kit/Part number	Description
	059464	45° Duramax robotic torch assembly with 7.6 m (25') leads
	059585	45° Duramax robotic torch assembly with 15.2 m (50') lead
1	058519	O-ring
2	075504	Pilot terminal screw
3	075714	#4 x 1/2 slotted TORX pan head screws
4	228109	Kit: Cap-sensor switch replacement
5	428260	Kit: FastConnect replacement
6	228852	Kit: Robotic torch lead replacement, 7.6 m (25')
7	228855	Kit: 45° Robotic torch main body replacement
8	228858	Kit: 45° Robotic torch positioning barrel replacement
	228806	Kit: Robotic torch clamp assembly

Duramax® Lock 75° hand torch parts

For use with the Powermax45® XP

Duramax Lock 75° hand torch assembly

Item	Kit/Part number	Description
	088164[1]	Duramax Lock 75° hand torch assembly with 6.1 m (20') lead
	088165[1]	Duramax Lock 75° hand torch assembly with 15 m (50') lead
1	428590	Kit: 75° hand torch handle (with screws)
2	428162	Kit: Hand torch start switch
3	428594	Kit: Cap-sensor switch/torch-disable switch assembly for hand torch (includes wires and connectors)
4	428588	Kit: 75° hand torch main body (with O-ring)
5	428180	Kit: Replacement O-rings for torch body
6	075504	Pilot terminal screw
7	428156	Kit: Hand torch trigger and spring – includes start switch and screws for torch handle
8	428182	Kit: Replacement springs for hand torch trigger
9	428148	Kit: Replacement screws for torch handle
10	228314	Kit: Torch quick-disconnect repair (shell with button – does not include torch lead)
11	428592	Kit: Hand torch lead replacement, 6.1 m (20')
11	428593	Kit: Hand torch lead replacement, 15 m (50')
12	428595	Kit: Torch-disable slider for hand torch (with yellow/green label)

[1]The torch assembly does not include consumables.

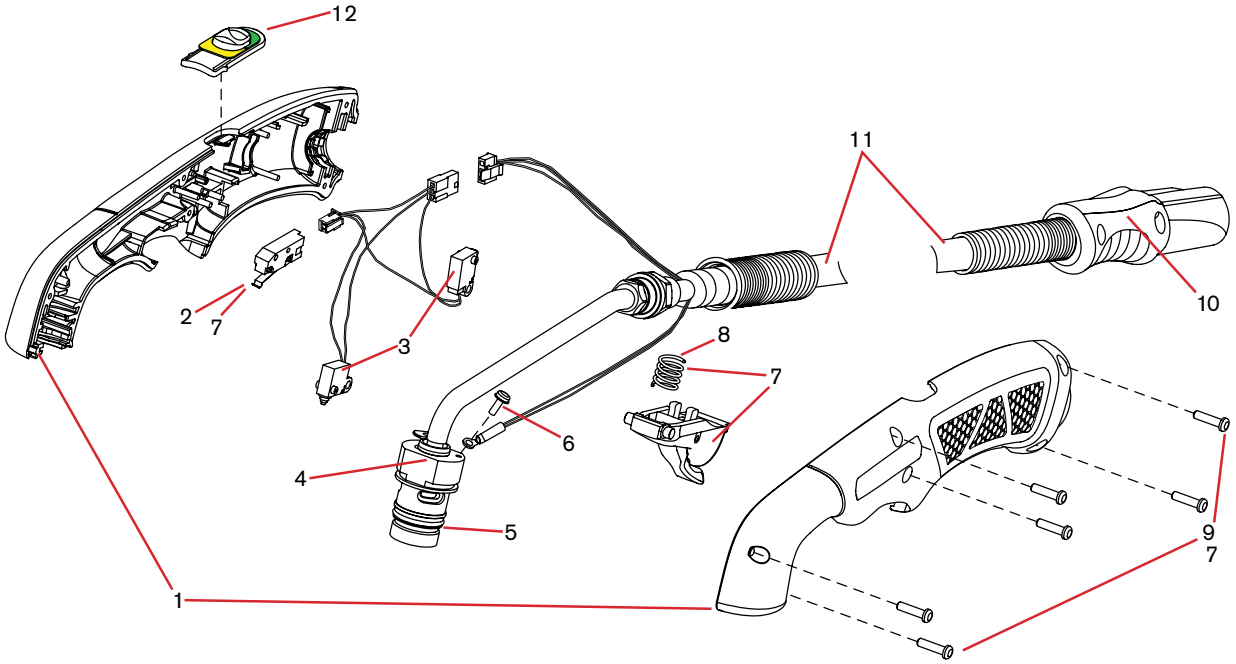

Duramax® Lock 15° hand torch parts

For use with the Powermax45® XP

Duramax Lock 15° hand torch assembly

Item	Kit/Part number	Description
	088162[1]	Duramax Lock 15° hand torch assembly with 6.1 m (20') lead
	088163[1]	Duramax Lock 15° hand torch assembly with 15 m (50') lead
1	428591	Kit: 15° hand torch handle (with screws)
2	428162	Kit: Hand torch start switch
3	428594	Kit: Cap-sensor switch/torch-disable switch assembly for hand torch (includes wires and connectors)
4	428589	Kit: 15° hand torch main body (with O-ring)
5	428180	Kit: Replacement O-rings for torch body
6	075504	Pilot terminal screw
7	428156	Kit: Hand torch trigger and spring – includes start switch and screws for torch handle
8	428182	Kit: Replacement springs for hand torch trigger
9	428148	Kit: Replacement screws for torch handle
10	228314	Kit: Torch quick-disconnect repair (shell with button – does not include torch lead)
11	428592	Kit: Hand torch lead replacement, 6.1 m (20')
11	428593	Kit: Hand torch lead replacement, 15 m (50')
12	428595	Kit: Torch-disable slider for hand torch (with yellow/green label)

[1]The torch assembly does not include consumables.

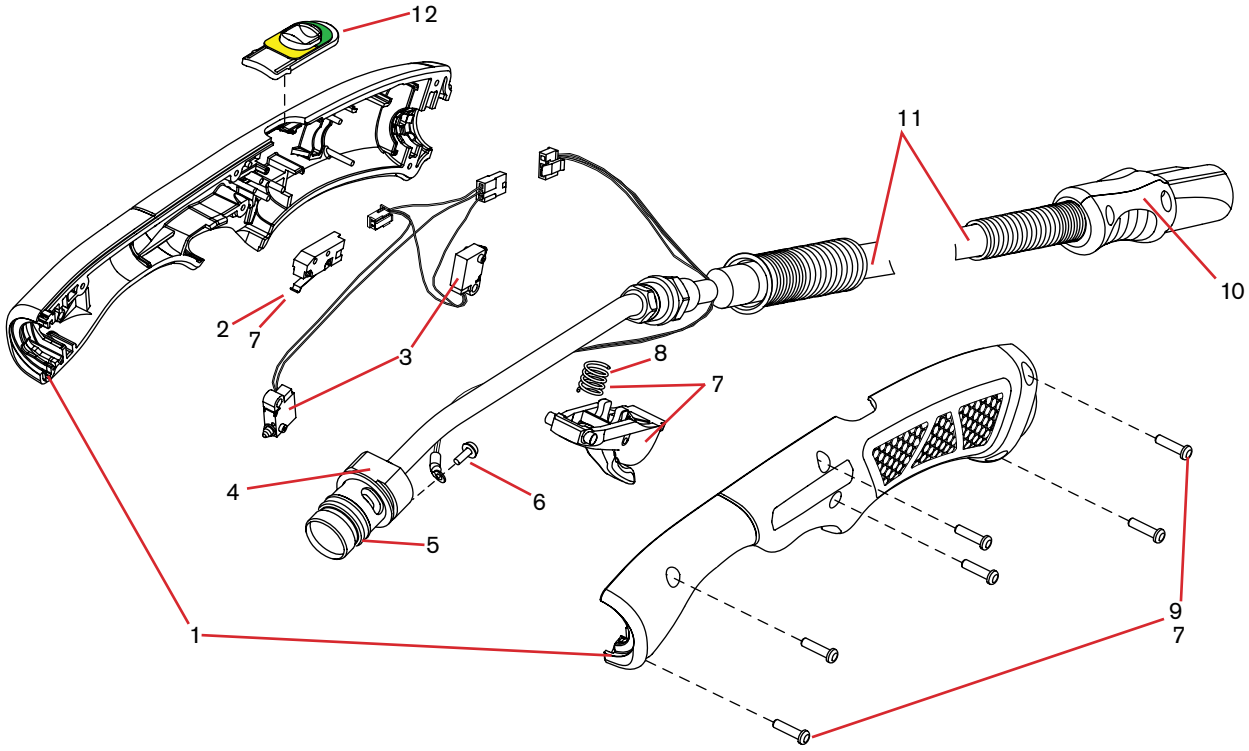

Duramax® Lock 180° full-length machine torch parts

For use with the Powermax45® XP

Duramax Lock 180° machine torch assembly

Item	Kit/Part number	Description
	088167*	Kit: Duramax Lock machine torch assembly with 7.6 m (25') lead
	088168*	Kit: Duramax Lock machine torch assembly with 10.7 m (35') lead
	088169*	Kit: Duramax Lock machine torch assembly with 15 m (50') lead
1	428703	Kit: Removable 32-pitch gear rack (with screws)
2	428596	Kit: Machine torch shell (with screws)
3	428704	Kit: Torch main body replacement for machine torch
4	428180	Kit: Replacement O-rings for torch body
5	075504	Pilot terminal screw
6	428148	Kit: Replacement screws for torch shell
7	428260	Kit: Torch quick-disconnect repair (shell with button – does not include torch lead)
8	428699	Kit: Machine torch lead replacement, 7.6 m (25')
8	428710	Kit: Machine torch lead replacement, 10.7 m (35')
8	428700	Kit: Machine torch lead replacement, 15 m (50')
9	428705	Kit: Cap-sensor switch/torch-disable switch assembly for machine torch (includes wires and connector)
10	428706[1]	Kit: Torch-disable slider for machine torch (with yellow/green label)

[1]The torch assembly does not include consumables.

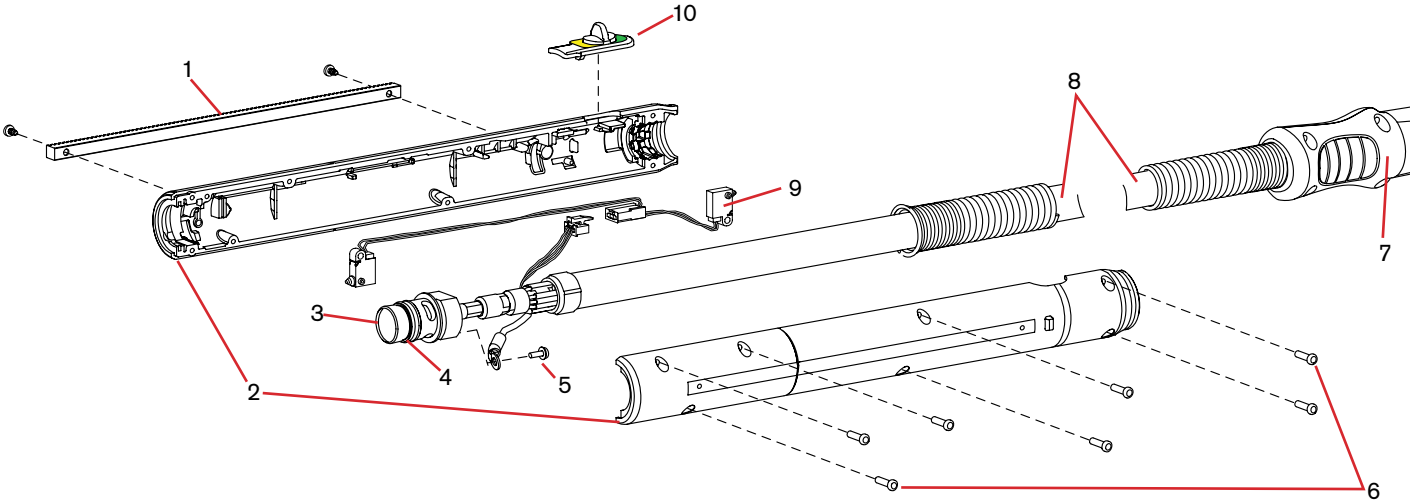

Duramax® HRT/HRTs hand torch parts

Duramax HRT hand torch parts

Item	Part number	Description
	228788	HRT hand torch assembly with 7.6 m (25') lead
	228789	HRT hand Torch Assembly with 15.2 m (50') lead
5	058519	O-ring
	075504	Pilot terminal screw
2	075714	Handle screws, #4 x 1/2 slotted TORX pan head, S/B
1	228954	Kit: Duramax 75°/ HRT Torch handle replacement
6	228719	Kit: Duramax 75°/HRT Cap-sensor switch replacement
3	228721	Kit: Duramax 15°/Duramax 75°/HRT/HRTs Safety trigger with spring replacement
7	228952	Kit: HRT/HRTs Torch lead replacement, 7.6 m (25'), coupler with 12.7 mm (1/2") threads
	228953	Kit: HRT/HRTs Torch lead replacement, 15.2 m (50'), coupler with 12.7 mm (1/2") threads
4	228792	Kit: HRT Torch main body replacement, coupler with 9.5 mm (3/8") threads
	228950	Kit: HRT Torch main body replacement, coupler with 12.7 mm (1/2") threads

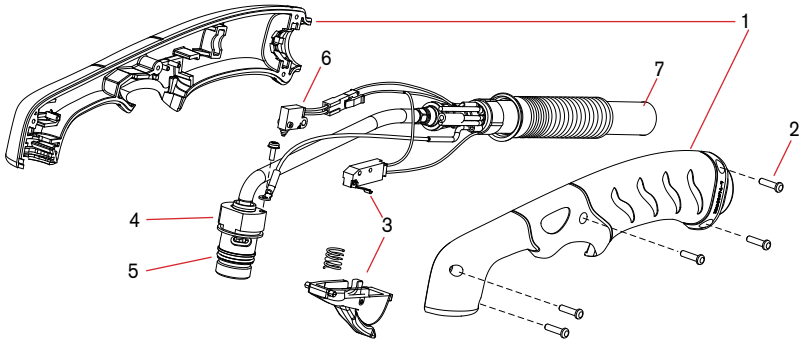

Duramax HRTs hand torch parts

Item	Part number	Description
	228807	HRTs hand torch assembly with 7.6 m (25') lead
5	058519	O-ring
	075504	Pilot terminal screw
2	075714	Handle screws, #4 x 1/2 slotted TORX pan head, S/B
1	228955	Kit: Duramax 15°/ HRTs Torch handle replacement
6	228109	Kit: Duramax 15°/HRTs Cap-sensor switch replacement
3	228721	Kit: Duramax 15°/Duramax 75°/HRT/HRTs Safety trigger with spring replacement
7	228952	Kit: HRT/HRTs Torch lead replacement, 7.6 m (25'), coupler with 12.7 mm (1/2") threads
	228953	Kit: HRT/HRTs Torch lead replacement, 15.2 m (50'), coupler with 12.7 mm (1/2") threads
4	228951	Kit: HRTs Torch main body replacement, coupler with 12.7 mm (1/2") threads

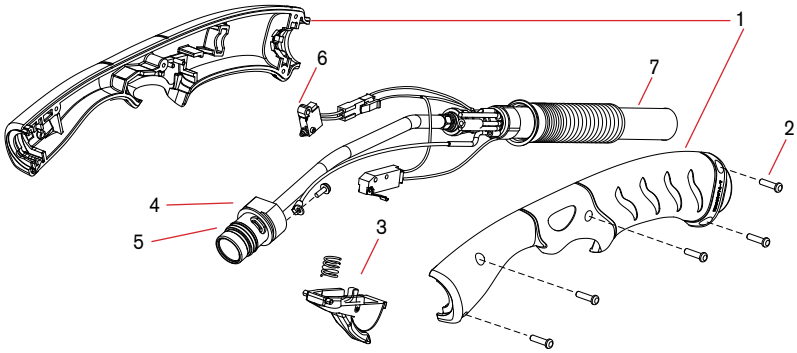

Duramax® MRT machine torch parts

Duramax MRT machine torch parts

Item	Part number	Description
	228790[1]	MRT machine torch assembly with 7.6 m (25') lead
	228791[1]	MRT machine torch assembly with 15.2 m (50') lead
1	228737	Kit: M65/M85/MRT positioning sleeve
2	228738	Kit: M65/M85/MRT removable gear rack
3	228735	Kit: M65/M65m/M85/M85m/MRT front mounting sleeve
4	228736	Kit: M65/M65m/M85/M85m/MRT adapter ring (coupler)
5	228793	Kit: MRT torch main body replacement
6	228720	Kit: Cap-sensor switch replacement
7	058519	O-ring
8	075504	Pilot terminal screw
9	228786	Kit: MRT torch lead replacement, 7.6 m (25')
9	228787	Kit: MRT torch lead replacement, 15.2 m (50')
	128650	Remote start pendant for machine torch, 7.6 m (25')
	128651	Remote start pendant for machine torch, 15.2 m (50')

[1]Assembly includes a variety of Duramax consumables.

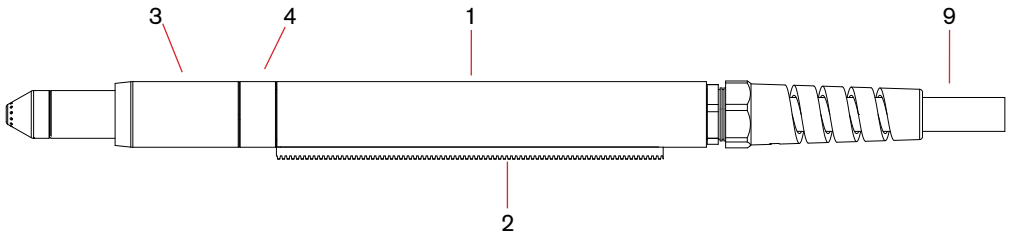

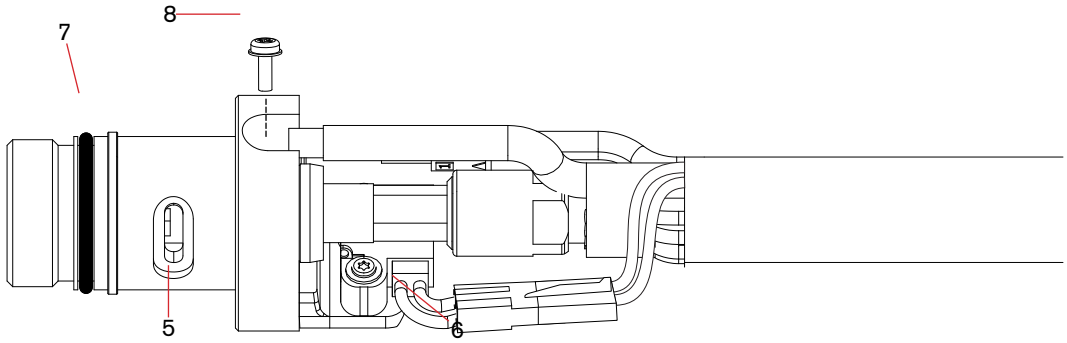

Duramax® HRT hand torch parts

Duramax HRT hand torch parts

Item	Part number	Description
	228916[1]	HRT hand torch assembly with 7.6 m (25') lead
	228917[1]	HRT hand torch assembly with 15.2 m (50') lead
	228918[1]	HRT hand torch assembly with 7.6 m (25') lead, without quick disconnect
	~~228919[1]~~	HRT hand torch assembly with 15.2 m (50') lead, without quick disconnect
1	228954	Kit: Duramax 75°/HRT Torch handle replacement
2	075714	Handle screws, #4 x 1/2 slotted TORX pan head, S/B
3	228721	Kit: Duramax 75°/Duramax 15°/HRT (spring and trigger assembly)
4	228950	Kit: HRT Torch main body replacement
5	058519	O-ring
6	228719	Kit: Duramax 75°/HRT Cap-sensor switch replacement
7	228924	Kit: HRT Torch lead replacement, 7.6 m (25')
7	228925	Kit: HRT Torch lead replacement, 15.2 m (50')
7	228926	Kit: HRT Torch lead replacement, 7.6 m (25'), without quick disconnect
7	228927	Kit: HRT Torch lead replacement, 15.2 m (50'), without quick disconnect
	~~128926~~	Kit: Quick disconnect repair (regional repair centers only)

[1]Assembly includes a variety of Duramax consumables.

Selected torches and repair parts are no longer available.
System upgrade is recommended. See pages 3 for systems by amperage.

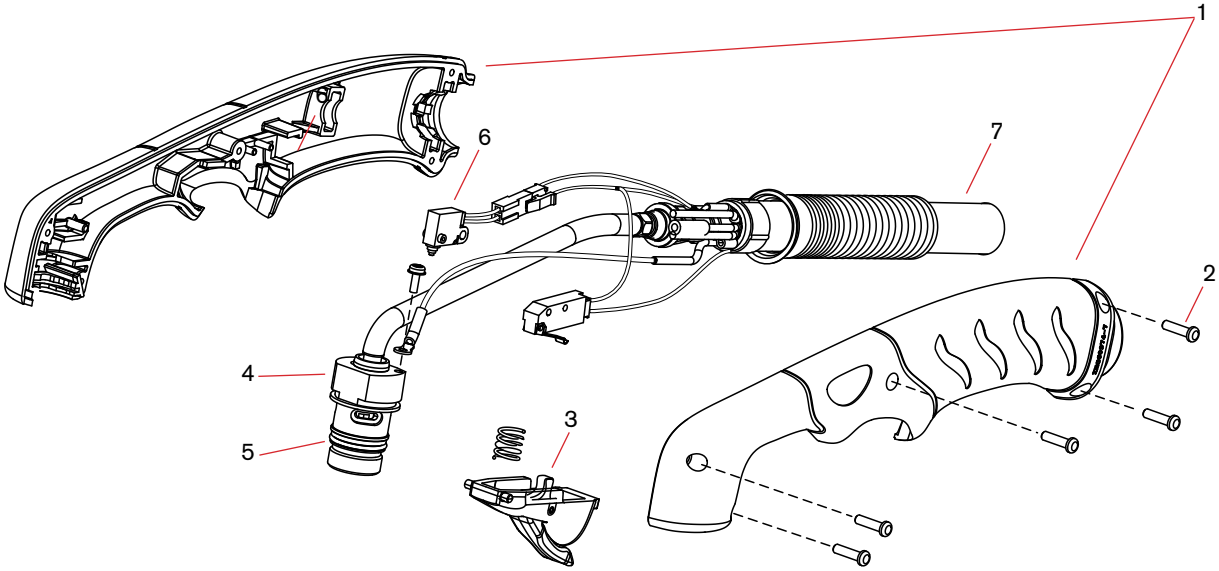

Duramax® MRT machine torch parts

Duramax MRT machine torch parts

Item	Part number	Description
	228920*	MRT machine torch assembly with 7.6 m (25') lead
	228921*	MRT machine torch assembly with 15.2 m (50') lead
	~~228922*~~	MRT machine torch assembly with 7.6 m (25') lead, without quick disconnect
1	228737	Kit: Duramax 180°/MRT positioning sleeve
2	228738	Kit: Duramax 180°/MRT removable gear rack
3	228735	Kit: Duramax 180°/Duramax 180° mini/MRT front mounting sleeve
4	228736	Kit: Duramax 180°/Duramax 180° mini/MRT adapter ring (coupler)
5	228793	Kit: MRT torch main body replacement
6	228720	Kit: Cap-sensor switch replacement (includes screws)
7	058519	O-ring
8	075504	Pilot terminal screw
9	228928	Kit: MRT torch lead replacement, 7.6 m (25')
9	228929	Kit: MRT torch lead replacement, 15.2 m (50')
9	228930	Kit: MRT torch lead replacement, 7.6 m (25'), without quick disconnect
9	228931	Kit: MRT torch lead replacement, 15.2 m (50'), without quick disconnect

*Assembly includes a variety of Duramax consumables.

Selected torches and repair parts are no longer available.
System upgrade is recommended. See pages 3 for systems by amperage.

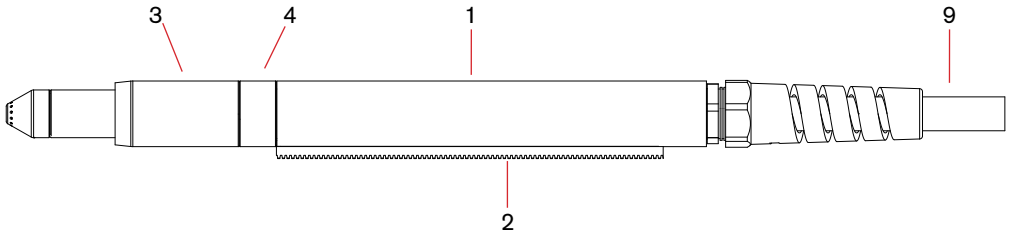

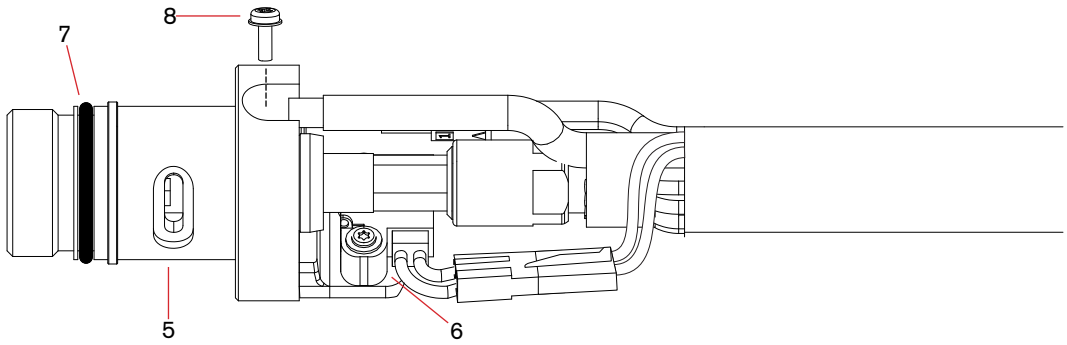

Powermax1000/1250/1650®

T60/T80 and T100/T100M/T100M-2 torch consumables

Original consumables for the T60/T80/T100 torches remain available and are listed below.

Minimum order quantity			1	1	5	5	1
Consumable type	**Torch type**	**Amperage**	**Shield/Deflector[1]**	**Retaining cap**	**Nozzle**	**Electrode**	**Swirl ring**
Shielded	Hand	40	120929[1]	120928	120932[1]	120926[3]	120925
		60			120931[1]		
		80			120927[1]		
		100	220065[1]	220048	220011[1]	220037[1]	220051

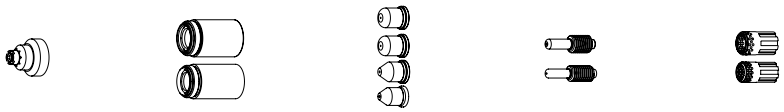

Minimum order quantity			1	1	5	5	1
Consumable type	**Torch type**	**Amperage**	**Shield/Deflector**	**Retaining cap**	**Nozzle[2]**	**Electrode[2]**	**Swirl ring**
Unshielded[3]	Hand/Machine	40	120979	120928	220006	120926[1]	120925
		60			220007		
		80			120980		
		100		220048	220064	220037[1]	220051

[1]Consumable available in bulk packaging. See order information on next page.
[2]In countries following CE standards, unshielded consumables may only be used in mechanized torch applications.
[3]CE shield for use in countries requiring CE, CCC, GOST marks.

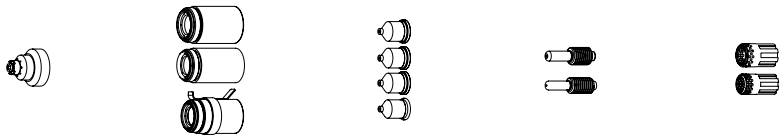

Minimum order quantity			1	1	5	5	1
Consumable type	**Torch type**	**Amperage**	**Shield/Deflector**	**Retaining cap**	**Nozzle**	**Electrode**	**Swirl ring**
Mechanized	Machine	40	120930[1]	120928 220061 (ohmic)	120932[1]	120926	120925
		60			120931[1]		
		80			120927[1]		
		100	220047[1]	220048 220206 (ohmic)	220011[1]	220037[1]	220051

Powermax1000/1250/1650® (continued)

T60/T80 and T100/T100M/T100M-2 torch consumables

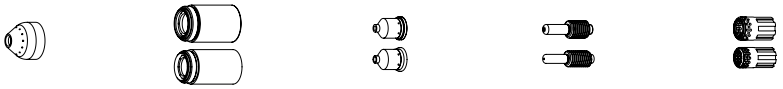

Minimum order quantity			1	1	5	5	1
Gouging	Hand/Machine	60–80	120977	120928	220059	120926[1]	120925
		100		220048	220063	220037[1]	220051

[1]Consumable available in bulk packaging. See order information below.

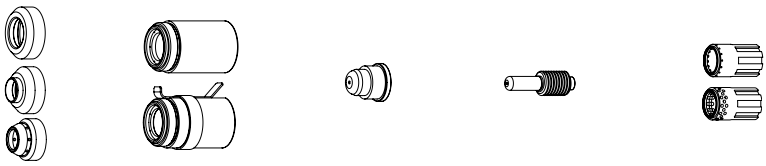

Minimum order quantity			1	1	5	5	1
Consumable type	**Torch type**	**Amperage**	**Shield/Deflector**	**Retaining cap**	**Nozzle**	**Electrode**	**Swirl ring**
FineCut®	Hand	40	120979	120928 220061 (ohmic)	220329	120926[1]	220327
		40 CE[3]	220325				
	Machine	40	120979 220404 (ohmic)				120925
		40 CE[3]	220325 220404 (ohmic)				

[1]Consumable available in bulk packaging. See order information below.
[3]CE Shield for use in countries requiring CE,CCC,GOST marks.

Consumable bulk kits

Order quantity	25	25	25	25	25	10	10
Bulk kit part number	**228437**	**228443**	**228440**	**228442**	**228438**	**228439**	**228444**
Contents	120926 electrode	220037 electrode	120931 nozzle	220011 nozzle	120927 nozzle	120929 shield	220065 shield

Powermax® bulk pack consumables

Contents of package	Bulk part number (SKU, order number)	Part type	Quantity
120926	228437	Electrode	25
120927	228438	Nozzle	25
120929	228439	Shield	10
120931	228440	Nozzle	25
220011	228442	Nozzle	25
220037	228443	Electrode	25
220065	228444	Shield	10
220669	228844	Electrode	25
220671	228843	Nozzle	25
220777	228934	Electrode	25
220797	228762	Nozzle	25
220816	228760	Nozzle	25
220817	228763	Shield	10
220818	228764	Shield	10
220819	228759	Nozzle	25
220842	228767	Electrode	25
220930	228761	Nozzle	25
220941	228765	Nozzle	25
220990	228797	Nozzle	25
220991	228796	Nozzle	25
220992	228798	Shield	10
220993	228799	Shield	10

Appendix

In 2012, Hypertherm initiated a product lifecycle management process for legacy MAX® and Powermax® systems designed to provide customers with a path for upgrading their torch and consumables to maximize performance and ensure overall product satisfaction. Retrofit torch options to replace the original torches that are no longer available are summarized by system in the charts below.

Please also refer to the systems and torch series by amperage charts found on pages 4 and 5 of the catalog for additional information on torch series availability and recommended system upgrade paths for legacy MAX and Powermax systems.

MAX42® and MAX43® systems Duramax® retrofit torches

Original part number	Description	Duramax part number	Replacement description
071069	PAC121P/43 hand torch assembly 25'	228916	Duramax RT hand torch assembly 25'
071070	PAC121P/43 hand torch assembly 50'	228917	Duramax RT hand torch assembly 50'
083215	RT60 hand torch assembly 25'	228916	Duramax RT hand torch assembly 25'
083216	RT60 hand torch assembly 50'	228917	Duramax RT hand torch assembly 50'
083217	RT60M machine torch assembly 25'	228920	Duramax RT mechanized torch assembly 25'
083218	RT60M machine torch assembly 50'	228921	Duramax RT mechanized torch assembly 50'

Powermax600® Duramax® retrofit torches

Original part number	Description	Duramax part number	Replacement description
086001	PAC123T hand torch assembly 15'	228918	Duramax RT hand torch assembly 25' (no QDisc)
086002	PAC123T hand torch assembly 25'	228918	Duramax RT hand torch assembly 25' (no QDisc)
086003	PAC123T hand torch assembly 50'	Not available	Duramax RT hand torch assembly 50' (no QDisc)
086004	PAC123M machine torch assembly 15'	228922	Duramax RT mechanized torch assembly 25' (no QDisc)
086005	PAC123M machine torch assembly 25'	228922	Duramax RT mechanized torch assembly 25' (no QDisc)
086006	PAC123M machine torch assembly 50'	228922	Duramax RT mechanized torch assembly 25' (no QDisc)
086023	PAC123T hand torch assembly 15' QDisc	228916	Duramax RT hand torch assembly 25'
086024	PAC123T hand torch assembly 25' QDisc	228917	Duramax RT hand torch assembly 50'
086025	PAC123T hand torch assembly 50' QDisc	228916	Duramax RT hand torch assembly 25'
086026	PAC123M machine torch assembly 15' QDisc	228920	Duramax RT mechanized torch assembly 25'
086027	PAC123M machine torch assembly 25' QDisc	228921	Duramax RT mechanized torch assembly 50'
086029	PAC123M machine torch assembly 50' QDisc	228921	Duramax RT mechanized torch assembly 50' (no QDisc)
083215	RT60 hand torch assembly 25'	228916	Duramax RT hand torch assembly 25'
083216	RT60 hand torch assembly 50'	228917	Duramax RT hand torch assembly 50'
083217	RT60M machine torch assembly 25'	228920	Duramax RT mechanized torch assembly 25'
083218	RT60M machine torch assembly 50'	228921	Duramax RT mechanized torch assembly 50'

Powermax800® and Powermax900® Duramax® retrofit torches

Original part number	Description	Duramax part number	Replacement description
083066	PAC125T hand torch assembly 25'	228916	Duramax RT hand torch assembly 25'
083067	PAC125T hand torch assembly 50'	228917	Duramax RT hand torch assembly 50'
083068	PAC125M machine torch assembly 25'	228920	Duramax RT mechanized torch assembly 25'
083069	PAC125M machine torch assembly 15'	228920	Duramax RT mechanized torch assembly 25'
083070	PAC125M machine torch assembly 35' QDisc	228921	Duramax RT mechanized torch assembly 50'
083071	PAC125M machine torch assembly 50' QDisc	228921	Duramax RT mechanized torch assembly 50'
083072	PAC125M machine torch assembly no-PGT 25'	228920	Duramax RT mechanized torch assembly 25'
083073	PAC125M machine torch assembly no-PGT 15'	228920	Duramax RT mechanized torch assembly 25'
083074	PAC125M machine torch assembly no-PGT 35'	228921	Duramax RT mechanized torch assembly 50'
083075	PAC125M machine torch assembly no-PGT 50'	228921	Duramax RT mechanized torch assembly 50'
083127	PAC125T-40A hand torch assembly 15'	228916	Duramax RT hand torch assembly 25'
083128	PAC125T-40A hand torch assembly 25'	228916	Duramax RT hand torch assembly 25'
083129	PAC125T-40A hand torch assembly 50'	228917	Duramax RT hand torch assembly 50'
083130	PAC125T-50A hand torch assembly 25'	228916	Duramax RT hand torch assembly 25'
083131	PAC125T-50A hand torch assembly 50'	228917	Duramax RT hand torch assembly 50'
083133	PAC125M-40A machine torch assembly 25'	228920	Duramax RT mechanized torch assembly 25'
083135	PAC125M-40A machine torch assembly 50'	228921	Duramax RT mechanized torch assembly 50'
083136	PAC125M-50A machine torch assembly 14'	228920	Duramax RT mechanized torch assembly 25'
083137	PAC125M-50A machine torch assembly 25'	228920	Duramax RT mechanized torch assembly 25'
083138	PAC125M-50A machine torch assembly 35'	228921	Duramax RT mechanized torch assembly 50'
083139	PAC125M-50A machine torch assembly 50'	228921	Duramax RT mechanized torch assembly 50'
083140	PAC125M-50A machine torch no-PGTL 14'	228920	Duramax RT mechanized torch assembly 25'
083141	PAC125M-50A machine torch no-PGTL 25'	228920	Duramax RT mechanized torch assembly 25'
083142	PAC125M-50A machine torch no-PGTL 35'	228921	Duramax RT mechanized torch assembly 50'
083143	PAC125M-50A machine torch no-PGTL 50'	228921	Duramax RT mechanized torch assembly 50'
083145	PAC125M machine torch 35 mm SLV 25' QDisc	N/A	
083148	PAC125M machine torch 35 mm SLV 50' QDisc	N/A	
083215	RT60 hand torch assembly 25'	228916	Duramax RT hand torch assembly 25'
083216	RT60 hand torch assembly 50'	228917	Duramax RT hand torch assembly 50'
083217	RT60M machine torch assembly 25'	228920	Duramax RT mechanized torch assembly 25'
083218	RT60M machine torch assembly 50'	228921	Duramax RT mechanized torch assembly 50'

Powermax1000® Duramax® retrofit torches

Original part number	Description	Duramax part number	Replacement description
083171	T60 hand torch assembly 50'	228789	Duramax HRT handheld 50'
083172	T60 hand torch assembly 25'	228788	Duramax HRT handheld 25'
083174	T60M machine torch 60A 25'	228790	Duramax MRT mechanized 25'
083175	T60M machine torch 60A 15'	228790	Duramax MRT mechanized 25'
083176	T60M machine torch 60A 35'	228791	Duramax MRT mechanized 50'
083177	T60M machine torch 60A 50'	228791	Duramax MRT mechanized 50'

Powermax1250® Duramax® retrofit torches

Original part number	Description	Duramax part number	Replacement description
087001	T80 hand torch assembly 25'	228788	Duramax HRT handheld 25'
087002	T80 hand torch assembly 50'	228789	Duramax HRT handheld 50'
087003	T80M machine torch 80A 15'	228790	Duramax MRT mechanized 25'
087004	T80M machine torch 80A 25'	228790	Duramax MRT mechanized 25'
087005	T80M machine torch 80A 35'	228791	Duramax MRT mechanized 50'
087006	T80M machine torch 80A 50'	228791	Duramax MRT mechanized 50'
087029	T80M machine torch 80A 35 mm 15'	Not available	
087030	T80M machine torch 80A 35 mm 25'	Not available	
087031	T80M machine torch 80A 35 mm 50'	Not available	
087032	T80M machine torch 80A 35 mm 35'	Not available	
087047	T80 hand torch assembly 75'	Not available	
087048	T80M machine torch 80A 75'	Not available	
087064	T80M-2 machine torch 80A 75'	Not available	
087065	T80M machine torch ohmic 25’	Not available	
087066	T80M machine torch ohmic 50’	Not available	
087082	T80M-2 machine torch assembly 35 mm 75'	Not available	

Powermax1650® Duramax® replacement torches

Original part number	Description	Duramax part number	Replacement description
059264	T100 hand torch assembly 25'	228788	Duramax HRT handheld 25'
059270	T100 hand torch assembly 50'	228789	Duramax HRT handheld 50'
059299	T100 hand torch assembly 75'	Not available	
059315	T100M-2 machine torch assembly 25'	228790	Duramax MRT mechanized 25'
059324	T100M-2 machine torch assembly 35'	228791	Duramax MRT mechanized 50'
059325	T100M-2 machine torch assembly 50'	228791	Duramax MRT mechanized 50'
059326	T100M-2 machine torch assembly 75'	Not available	
059333	T100M-2 machine torch assembly 35 mm 25'	228790	Duramax MRT mechanized 25'
059334	T100M-2 machine torch assembly 35 mm 35'	228791	Duramax MRT mechanized 50'
059335	T100M-2 machine torch assembly 35 mm 50'	228791	Duramax MRT mechanized 50'
059336	T100M-2 machine torch assembly 35 mm 75'	Not available	

Powermax65® Duramax® replacement torches

Original part number	Description	Duramax part number	Replacement description
083247	Powermax65 75° hand torch assembly 25'	059473	Powermax65/85/105 75° hand torch assembly 25'
083248	Powermax65 75° hand torch assembly 50'	059474	Powermax65/85/105 75° hand torch assembly 50'
083249	Powermax65 75° hand torch assembly 75'	059475	Powermax65/85/105 75° hand torch assembly 75'
083251	Powermax65 15° hand torch assembly 25'	059470	Powermax65/85/105 15° hand torch assembly 25'
083252	Powermax65 15° hand torch assembly 50'	059471	Powermax65/85/105 15° hand torch assembly 50'
083253	Powermax65 15° hand torch assembly 75'	059472	Powermax65/85/105 15° hand torch assembly 75'
083254	Powermax65 180° machine torch assembly 15'	059476	Powermax65/85/105 180° machine torch assembly 15'
083255	Powermax65 180° machine torch assembly 25'	059477	Powermax65/85/105 180° machine torch assembly 25'
083256	Powermax65 180° machine torch assembly 35'	059478	Powermax65/85/105 180° machine torch assembly 35'
083257	Powermax65 180° machine torch assembly 50'	059479	Powermax65/85/105 180° machine torch assembly 50'
083258	Powermax65 180 ° machine torch assembly 75'	059480	Powermax65/85/105 180° machine torch assembly 75'
083259	Powermax65 180 ° mini machine torch assembly 15'	059481	Powermax65/85/105 180° mini machine torch assembly 15'
083260	Powermax65 180° mini machine torch assembly 25'	059482	Powermax65/85/105 180° mini machine torch assembly 25'
083261	Powermax65 180° mini machine torch assembly 35'	059483	Powermax65/85/105 180° mini machine torch assembly 35'
083262	Powermax65 180° mini machine torch assembly 50'	059484	Powermax65/85/105 180° mini machine torch assembly 50'
083263	Powermax65 180° mini machine torch assembly 75'	Not available	

Powermax85® Duramax® replacement torches

Original part number	Description	Duramax part number	Replacement description
087085	Powermax85 75° hand torch assembly 25'	059473	Powermax65/85/105 75° hand torch assembly 25'
087086	Powermax85 75° hand torch assembly 50'	059474	Powermax65/85/105 75° hand torch assembly 50'
087087	Powermax85 75° hand torch assembly 75'	059475	Powermax65/85/105 75° hand torch assembly 75'
087089	Powermax85 15° hand torch assembly 25'	059470	Powermax65/85/105 15° hand torch assembly 25'
087090	Powermax85 15° hand torch assembly 50'	059471	Powermax65/85/105 15° hand torch assembly 50'
087091	Powermax85 15° hand torch assembly 75'	059472	Powermax65/85/105 15° hand torch assembly 75'
087092	Powermax85 180° machine torch assembly 15'	059476	Powermax65/85/105 180° machine torch assembly 15'
087093	Powermax85 180° machine torch assembly 25'	059477	Powermax65/85/105 180° machine torch assembly 25'
087094	Powermax85 180° machine torch assembly 35'	059478	Powermax65/85/105 180° machine torch assembly 35'
087095	Powermax85 180° machine torch assembly 50'	059479	Powermax65/85/105 180° machine torch assembly 50'
087096	Powermax85 180° machine torch assembly 75'	059480	Powermax65/85/105 180° machine torch assembly 75'
087097	Powermax85 180° mini machine torch assembly 15'	059481	Powermax65/85/105 180° mini machine torch assembly 15'
087098	Powermax85 180° mini machine torch assembly 25'	059482	Powermax65/85/105 180° mini machine torch assembly 25'
087099	Powermax85 180° mini machine torch assembly 35'	059483	Powermax65/85/105 180° mini machine torch assembly 35'
087100	Powermax85 180° mini machine torch assembly 50'	059484	Powermax65/85/105 180° mini machine torch assembly 50'
087101	Powermax85 180° mini machine torch assembly 75'	Not available	

Powermax65® and Powermax85® torch and lead replacement kits

Original part number	Description	Duramax part number	Replacement description
228717	Kit:H65/H85/HRT torch handle replacement	228954	Kit:Duramax HT/HRT torch handle replacement
228718	Kit:H65s/H85s torch handle replacement	228955	Kit:Duramax HTS/HRTS torch handle replacement
228723	Kit:H65/H85 torch lead replacement, 25'	Not available	
228724	Kit:H65/H85 torch lead replacement, 50'	Not available	
228725	Kit:H65/H85 torch lead replacement, 75'	Not available	
228727	Kit:H65s/H85s torch lead replacement, 25'	228959	Kit:Duramax hand torch lead replacement 25'
228728	Kit:H65s/H85s torch lead replacement, 50'	228960	Kit:Duramax hand torch lead replacement 50'
228729	Kit:H65s/H85s torch lead replacement, 75'	228961	Kit:Duramax hand torch lead replacement 75'
228784	Kit: Duramax HRT/HRTs lead replacement 25'	228952	Kit: Duramax HRT/HRTS 1/2" coupler lead replacement 25'
228785	Kit: Duramax HRT/HRTs lead replacement 50'	228953	Kit: Duramax HRT/HRTS 1/2" coupler lead replacement 50'

MAX® and Powermax® legacy products support

	MAX40	MAX40CS	MAX42	MAX20	MAX70
End of production	1990	1996	1996	1997	1997
Service parts available	No	No	No	No	No
Original torch series available	No	No	No	No	No
Original consumables available	No	No	No	No	No
Retrofit torch/upgrade options	None	None	Duramax® RT	None	None
System upgrade options	Powermax45 SYNC	Powermax45 SYNC	Powermax45 SYNC	Powermax33 XP	Powermax85 SYNC
Support options	Hypertherm.com channel partner	Hypertherm.com channel partner	Hypertherm.com channel partner	Hypertherm.com channel partner	Hypertherm.com channel partner
Product manual part number	800640	801000	801160	800710	801770

	Powermax380	Powermax600	Powermax190c	Powermax1000	Powermax1250	Powermax1650
End of production	2007	2008	2009	2010	2010	2012
	No	Yes	No	Yes	Yes	Yes
Original torch series available	No	No	No	No	No	No
Original consumables available	No	No	No	Yes	Yes	Yes
Retrofit torch/ upgrade options	None	Duramax RT	None	Duramax RT	Duramax RT	Duramax RT
System upgrade options	Powermax33 XP	Powermax45 SYNC	Powermax30 AIR	Powermax65 SYNC	Powermax85 SYNC	Powermax105 SYNC
Support option	Hypertherm.com channel partner	Hypertherm.com channel partner	Hypertherm.com channel partner	Hypertherm.com channel partner	Hypertherm.com channel partner	Hypertherm.com channel partner
Product manual part number	803990	803400	803660	804300	803940	804470

MAX® and Powermax® legacy products support (continued)

HT40/HT40c	Powermax800	MAX43	Powermax350	Powermax900	Powermax1100	MAX100/100D
1998/1997	1998	1999	2001	2001	2002	2002/1999
No	No	No	No	No	No	No
No	No	No	No	No	No	No
No	No	No	No	No	No	No
None	Duramax RT	Duramax RT	None	Duramax RT	None	None
Powermax45 SYNC	Powermax65 SYNC	Powermax45 SYNC	Powermax33 XP	Powermax65 SYNC	Powermax85 SYNC	Powermax85 SYNC
Hypertherm.com channel partner	Hypertherm.com channel partner	Hypertherm.com channel partner	Hypertherm.com channel partner	Hypertherm.com channel partner	Hypertherm.com channel partner	Hypertherm.com channel partner
N/A	802280	801680	802920	803150	802910	N/A

Powermax30	Powermax45	Powermax65	Powermax85	Powermax105	Powermax30 XP	Powermax45 XP
2014	2016	2021	2021	2021	2026	2024
Yes	Yes	Yes	Yes	Yes	Yes	Yes
Yes	Yes	Yes	Yes	Yes	Yes	Yes
Yes	Yes	Yes	Yes	Yes	Yes	Yes
None	Duramax	Cartridge adapter, Cartridge RT	Cartridge adapter, Cartridge RT	Cartridge adapter, Cartridge RT	None	Cartridge adapter, Cartridge RT
Powermax33 XP	Powermax45 SYNC	Powermax65 SYNC	Powermax85 SYNC	Powermax105 SYNC	Powermax33 XP	Powermax45 SYNC
Technical service Hypertherm.com channel partner	Technical service Hypertherm.com channel partner	Technical service Hypertherm.com channel partner	Technical service Hypertherm.com channel partner	Technical service Hypertherm.com channel partner	Technical service Hypertherm.com channel partner	Technical service Hypertherm.com channel partner
805170	806110	807120	807120	807580	808160	809240

Accessories

Personal protective equipment

Dual face shield

127239 Shade 6
127103 Shade 8

Leather cutting gloves

127169

Gouging heat shield

428347 Duramax and SmartSYNC®
428348 Duramax Hyamp

Cutting goggles

ANSI Z87.1, CSA Z94.3, CE

Adjustable eye shades

127416 Shade 5

Clear safety shields

017034

Flip-up eye shades

ANSI Z87.1, CSA Z94.3, CE
017033 Shade 5

Torch accessories

Hyamp torch adapter

428495

Mechanized torch holder

120595 1-3/8" Dia
120596 1-3/4" Dia

Robotic torch holder

228806

Torch teach tools

The torch teach tools enable system operators to program the robot's cutting path, while visually verifying the torch will not touch the workpiece while cutting.

429054 for SmartSYNC® robotic torches
429057 for SmartSYNC® HyAccess robotic torches
229456 for Duramax robotic torches
229832 for Duramax Hyamp robotic torches

System accessories

Air filtration kits

128647 Filter kit only
228570 Powermax® 65/85, kit and cover
228890 Powermax105/125, kit and cover
011092 Replacement filter element
428719 Oil removal air filter kit

Leather torch sheathing

024877 Black leather 7.6 m (25')

Wheel/gantry kits

229370 Powermax65/85, 65 SYNC /85 SYNC wheel kit
229569 Powermax65/85, 65 SYNC /85 SYNC gantry kit
229467 Powermax105/105 SYNC/125, wheel kit
229570 Powermax/105 SYNC/125, gantry kit

System dust covers

127144 Powermax30/30 XP
127469 Powermax30 AIR
127219 Powermax45/45 XP/45 SYNC
127301 Powermax65/85
127360 Powermax105/125

Remote trigger pendant

128650 7.6 m (25')
128651 15.2 m (50')
128652 22.8 m (75')
428755 45.7 m (150')

Cartridge reader

The cartridge reader works with the Powermax SYNC cartridge reader app to provide a simple process for reviewing data stored in Powermax cartridges.

528083

Cutting guides

Circle cutting guide

127102 Basic Duramax®, Duramax LT, AIR, T30
027668 Deluxe Duramax, Duramax LT, AIR, T30
017053 Duramax Hyamp™
027669 Deluxe SmartSYNC®
017065 Basic SmartSYNC

Angle cutting guide

017041

Magnetic straight edge

017042

Bevel cutting guide

017059 Standard
017058 Duramax Hyamp
017066 SmartSYNC

Magnetic block 2-pack

017043

Torch alignment guide

Designed for setting up a machine torch to produce high quality bevel cuts at accurate angles using a tractor.

528077

SHAPING POSSIBILITY®

PLASMA | LASER | WATERJET | AUTOMATION | SOFTWARE | CONSUMABLES

For more information visit: www.hypertherm.com

Hypertherm, Powermax, Duramax, Powermax SYNC, SmartSYNC, FineCut, CopperPlus, HyAccess, FlushCut, Hyamp, SpringStart, and Conical Flow are trademarks of Hypertherm, Inc. and may be registered in the United States and/or other countries.

Please visit www.hyperthermassociates.com/patents for more details about Hypertherm Associates patent numbers and types.

© 10/2026 Hypertherm, Inc. Revision 22

880200

HYPERTHERM ASSOCIATES®