HYPERTHERM®
A Hypertherm Associates Brand

XPR170®

Instruction Manual

NOTICE! Refer to the ADDENDUM (810060_R8_ADD1) in the online Document Library for important updates to this manual.



810060 - Revision 8

English



Register your new Hypertherm system

Benefits of registration

- **Safety:** Registration allows us to contact you in the unlikely event a safety or quality notification is required.
- **Education:** Registration gives you free access to online product training content via the Hypertherm Cutting Institute.
- **Confirmation of ownership:** Registration can serve as proof of purchase in case of an insurance loss.

Go to www.hypertherm.com/registration for easy and fast registration.

If you experience any problems with the product registration process, please contact registration@hypertherm.com.

For your records

Serial number: _____

Purchase date: _____

Distributor: _____

Maintenance notes: _____

_____

_____

Warranty information

You can find warranty information for your product at www.hypertherm.com/warranty.

Recycling information

You can find recycling information for your product at www.hypertherm.com/resources/system-support/recycling/.

Contact us

hypertherm.com/contactus

Hypertherm, Inc.
21 Great Hollow Road, P.O. Box 5010
Hanover, NH 03755 USA
www.hypertherm.com/contact-us

XPR170®

Instruction Manual

810060
Revision 8

English
Original Instructions

November 2025

Hypertherm, Inc.
Hanover, NH 03755 USA
www.hypertherm.com

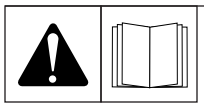

Safety information

WARNING! Before operating any Hypertherm equipment, read the safety instructions in your product's manual, the Safety and Compliance Manual (80669C), Waterjet Safety and Compliance Manual (80943C), and Radio Frequency Warning Manual (80945C). Failure to follow safety instructions can result in personal injury or in damage to equipment.

Copies of the manuals can come with the product in electronic and printed formats. Electronic copies are also on our website. Many manuals are available in multiple languages at www.hypertherm.com/docs.

Beckhoff is a trademark of Beckhoff Automation GmbH & Co. KG. Belden is a trademark of Belden Inc. EtherCAT is a trademark of Beckhoff Automation GmbH. Phillips is a trademark of Phillips Screw Company. Wi-Fi is a trademark of Wi-Fi Alliance.

Arc Response Technology, Core, CorePlus, EDGE, EasyConnect, HPR, HyDefinition, Hypertherm, LongLife, OptiMix, TorchConnect, VWI, XPR, XPR170, XPR300, and XPR460 are trademarks of Hypertherm, Inc. and may be registered in the United States and other countries. All other trademarks are the property of their respective holders.

Environmental stewardship is one of Hypertherm's core values, and it is critical to our success and our customers' success. We are striving to reduce the environmental impact of everything we do. For more information: www.hypertherm.com/environment.

©2018 – 2025 Hypertherm, Inc.

Contents

Electromagnetic Compatibility (EMC)....23

1 Specifications....25

XPR terminology for plasma cutting....25
Plasma cutting system description and components....26
Plasma power supply description....26
Gas connect consoles description....26
TorchConnect console description....27
Torch description....27
Plasma power supply specifications....27
Ecodesign requirements for CE models....31
XPR170 China energy label....31
Gas connect console specifications....32
TorchConnect console specifications....33
Torch specifications....34
Critical raw materials....36
Safety and EMC symbols and marks....36
IEC symbols....38

2 Qualifications and Requirements....41

Document requirements....41
Operator qualifications....41
Qualifications of service personnel....43
System electrical requirements....44
Electrical codes and requirements....44
General input power requirements....44
Line-disconnect switch requirements....45

Circuit breaker or fuse requirements....46
Main power cord requirements....46
Input power requirements for CE units....47
Remote on-off switch requirements....47
Process-gas requirements for all gas connect consoles....48
Plumbing requirements for supply gases....50
Regulator requirements for supply gases....53
Shield-water requirements (VWI and OptiMix)....55
Plumbing and hose requirements for shield water....56
Additional regulator requirement for shield water when pressure is high....56
Remove shield water from the gas connect console....56
Torque specifications for gas or water plumbing and hose connections....57
Coolant requirements....57
Coolant requirements for operation between -10°C – 40°C (14°F – 104°F)....58
Coolant requirements for operation in temperatures above 40°C (104°F)....59
Flow requirements for coolant....60
Purity requirements for coolant water....60
Requirements to put system components in position....61
Configuration requirements for the Core gas connect console....61
Configuration requirements for the CorePlus gas connect console....62
Configuration requirements for the VWI or OptiMix gas connect consoles....64
Worksite requirements for system components....65
Length requirements for hoses, cables, and leads....66
Bend-radius requirements for hoses, cables, and leads....67
Correct sizes for connectors on hoses, cables, and leads....67
Distance requirements between high-frequency cables and control cables....68
Distance requirements for ventilation and access....68
Requirements for ventilation....69
Requirements for service and maintenance access....69
Distance requirements for communications....69
Wireless compliance....69
Torch mounting bracket requirements....70
Torch lifter requirements....70
CNC requirements for plasma cutting systems....71
Remote on-off switch....71
Adjustable settings....71
Display settings....71
Diagnostics and troubleshooting....72

Recommended grounding and shielding..... 72
Types of grounding.....73
Grounding practices.....73
Example grounding diagram with a plasma cutting system.....76

3 Installation.....79
Before you begin installation.....79
Installation checklist.....84
System configuration with Core gas connect console.....87
System configuration with CorePlus gas connect console.....89
System configuration with VWI or OptiMix gas connect console.....90
Installation steps..... 91
Put the system components in position..... 91
Put the plasma power supply in position.....91
Put the gas connect console in position..... 92
Put the TorchConnect console in position..... 94
Ground the system components..... 97
Remove external panels from the system components..... 99
Prepare the hoses, cables, and leads..... 103
Connect the plasma power supply..... 104
Connect the gas connect console.....109
Connect the gas connect console (Core, CorePlus) to the TorchConnect console.....113
Connect the pilot-arc and coolant assembly for Core or CorePlus..... 114
Connect the power, CAN, and 3-gas assembly for Core.....117
Connect the power, CAN, and 4-gas assembly for CorePlus.....117
Connect the gas connect console (VWI, OptiMix) to the TorchConnect console..... 118
Connect the pilot-arc, coolant, and shield-water assembly for VWI or OptiMix..... 119
Connect the power, CAN, and 5-gas assembly for VWI or OptiMix.....122
Supply gas installation.....123
Install gas regulators.....128
Connect supply gases to Core or CorePlus.....128
Connect the supply gases and shield water to VWI or OptiMix..... 130
Install the torch-lead assembly to the torch receptacle.....132
Connect the torch lead to the TorchConnect console.....137
Remove the torch and consumable parts.....139
Install the torch in the torch receptacle..... 141
Install the torch in the torch mounting bracket.....143
Install the consumables..... 145

Connect electric power to the cutting system....147

4 Connect for Communication....149

Communication methods for XPR cutting systems....149
Requirements for EtherCAT....151
Requirements for EtherCAT and Ethernet LAN cables....151
Connect to the plasma power supply with EtherCAT....152
Requirements for serial RS-422....154
Pinouts for serial RS-422 interface cables....155
Connect to the plasma power supply with serial RS-422....155
Requirements for discrete....158
Pinouts for the discrete interface cables....159
Pinouts for the discrete cable for the expansion PCB....161
Connect to the plasma power supply with discrete....162
Alternate 24 VDC input....164
Use the XPR web interface to change the arc-voltage output scale....164
VDC3 PCB installation for AVC with RS-422 and discrete-only connections (if applicable)....166
Diagram of PCB, cable, and wire connections (if applicable)....166
VDC3 PCB connections....167
VDC3 PCB details....167
Install the VDC3 PCB (141511) (if applicable)....169
Connect the VDC3 PCB (141511) (if applicable)....170
Requirements for the XPR web interface....173
Support information for the XPR web interface....175
Use AP mode to connect (wireless)....175
Change the limited AP settings....177
Reset the wireless module....178
Disable the wireless connection temporarily....180
Disable the wireless connection permanently....183
Web interface screen information....184
Plasma power supply screen....185
Gas system screen....187
Log screen....190
Operate screen....190
Other screen....191
Requirements for Ethernet LAN (wired)....192
Requirements for EtherCAT and Ethernet LAN cables....194
Connect to the plasma power supply with Ethernet LAN (wired)....194

Use the XPR web interface with Wi-Fi and a DHCP-capable router to connect..... 197
Use the XPR web interface and no router to connect..... 198
Configure Ethernet LAN settings..... 199
Use Ethernet LAN to get access to the XPR web interface..... 202
Requirements for manual-set mode..... 204
Use wireless or Ethernet LAN to enable or disable manual-set mode..... 204
Use EtherCAT or serial RS-422 to enable or disable manual-set mode..... 205
Change the device that has control..... 206
Use ohmic contact sense..... 206
Example of internal ohmic contact sense..... 207
Example of external ohmic contact sense..... 208
Install a remote on-off switch..... 209
Examples of output circuits..... 210
Logic interface, active high..... 210
Logic interface, active low..... 211
Relay interface..... 211
This circuit voids the warranty. Do not use..... 212
Examples of input circuits..... 213
Relay interface..... 213
Optocoupler interface..... 214
Amplified-output interface..... 214
Redundant remote on-off interface..... 215
Install a redundant remote on-off switch..... 215

5 Coolant Installation..... 217

Overview of cutting system coolant..... 217
Fill the cutting system with coolant..... 217

6 Operation..... 221

CNC controls and display..... 221
Wireless device controls..... 222
Power-indicator LEDs..... 222
Sequence of operation..... 223
Power-up state (1)..... 223
Initial Checks state (2)..... 224
Gas Purge/Pump On state (3)..... 225
Wait for Start state (5)..... 227

Preflow/Charge DC state (7)....227
Ignite state (8)....228
Pilot Arc state (9)....230
Ramp-up state (11)....232
Steady state (12)....233
Ramp-down state (13)....234
End of Cycle state (14)....234
High-voltage relay stages in the ohmic circuit....235
Automatic purges....235
Gas-change purges for OptiMix or VWI cutting systems....236
Process-setup purges for all plasma cutting systems....237
Process selection....237
Use process IDs for optimal settings....238
Process ID offsets / overrides....238
Cut charts....239
Process core thickness (PCT)....239
Process categories....239
Torch consumables....242
Example configurations for consumables....242
Ferrous (mild steel) example configurations....242
Mild steel – 30 A – O_2/O_2....242
Mild steel – 50 A – O_2/Air....243
Mild steel – 80 A, 130 A, 170 A – O_2/Air....243
Non-ferrous (stainless steel and aluminum) example configurations....244
Non-ferrous – 40 A – N_2/N_2 and Air/Air....244
Non-ferrous – 60 A – F5/N_2, N_2/N_2, N_2/H_2O, and Air/Air....245
Non-ferrous – 80 A – F5/N_2, N_2/N_2, N_2/H_2O, Air/Air....246
Non-ferrous – 130 A – N_2/N_2, Mix/N_2, N_2/H_2O....247
Non-ferrous – 170 A – N_2/N_2, Mix/N_2, N_2/H_2O, Air/Air....248
Recommendations for maximum consumable life....249
Arc Response Technology....250
Automatic torch protection....250
Automatic ramp-down error protection....251

7 Maintenance....253

Overview of cutting system maintenance....253
References for cutting system maintenance....253

Remove the power from the cutting system....253
Cleaning and inspection schedule for preventive maintenance....255
Tasks for one-day intervals....256
Do a test of the inlet pressures....256
Examine the gas regulators....258
Examine the shield-water regulator (if applicable)....258
Examine the air filter....259
Examine the connections between the system components....259
Examine the coolant condition and level....260
Maintenance for torch and consumable parts....261
Remove the torch and consumable parts....261
Examine the water tube and torch....263
Examine the consumable parts....266
Examine the electrode for emitter wear....270
Examine the torch receptacle....272
Examine the torch lead....273
Coolant maintenance....276
Coolant replacement and its significance....277
Make an estimate of the total coolant volume....277
Remove old coolant from the plasma cutting system....278

8 Diagnostics and Troubleshooting....283

Safety considerations for troubleshooting....283
Initial inspection steps....287
Remove the power from the cutting system....287
Examine each PCB....288
Measure the line voltage between the terminals inside the plasma power supply....289
PCB names and locations....290
Diagnostic code conventions....290
Diagnostic codes....291
General troubleshooting procedures....305
Causes of decreased consumable life....305
Cuts are started or stopped off the surface of the workpiece....305
The cut settings are not correct....306
The cutting material is magnetic....306
Cutting faults that can occur frequently....306
The pilot arc starts but does not transfer to the workpiece....306

The plasma arc does not cut completely through the workpiece, and there is too much sparking on top of the workpiece 306
There is dross on the bottom of the cut 307
The angle of the cut is not square 307
Do a gas leak test 307
Coolant flow measurements 310
Use the CNC or XPR web interface to measure coolant flow 310
Do a container test to measure coolant flow 311
Do a test for continuity between the nozzle and workpiece 312
Corrective action 312
Measure resistance from thermistors 315
Do an ohmic-contact test 317
Troubleshooting procedures for diagnostic codes 319
CAN communication troubleshooting for gas connect consoles 319
Diagnostic codes 500, 507, 508, 510, 602 319
Symptoms 320
Corrective action 320
CAN communication troubleshooting for mixing modules in OptiMix consoles 322
Diagnostic codes 501, 507, 508, 511 322
Symptoms 322
Corrective action 322
CAN communication troubleshooting for TorchConnect consoles 324
Diagnostic codes 503, 507, 508, 513, 600 324
Symptoms 325
Corrective action 325
CAN communication troubleshooting for choppers 326
Diagnostic codes 504 – 508, 514 – 516, 601, 604, 606 326
Symptoms 326
Corrective action 327
Troubleshooting for an ignition timeout 328
Diagnostic code 520 328
Symptoms 329
Corrective action 329
Troubleshooting for a pilot arc timeout 329
Diagnostic code 521 329
Symptoms 330
Corrective action 330
Verification 330

Troubleshooting for gas flow process timeouts....330
Diagnostic codes 522 – 525....330
Symptoms....331
Corrective action....331
Troubleshooting for low outlet gas pressure....331
Diagnostic codes 530, 531, 533....331
Symptoms....332
Corrective action....332
Verification....332
Troubleshooting for low shield water pressure....332
Diagnostic code 532....332
Symptoms....333
Corrective action....333
Troubleshooting for low shield gas pressure....333
Diagnostic code 534....333
Symptoms....334
Corrective action....334
Troubleshooting for low coolant flow....335
Diagnostic codes 540 and 542....335
Symptoms....335
Corrective action....335
Troubleshooting for high coolant flow....337
Diagnostic codes 543, 544....337
Symptoms....337
Corrective action....337
Troubleshooting for low current....338
Diagnostic codes 550, 552 – 554....338
Symptoms....338
Corrective action....338
Troubleshooting for high current....339
Diagnostic codes 555, 556, 557....339
Symptoms....339
Corrective action....340
Troubleshooting for over-temperature faults for choppers and coolant....340
Diagnostic codes 560 – 562, 587....340
Symptoms....341
Corrective action....341
Ohmic resistance values for thermistors....343

Troubleshooting for start switch faults....344
Diagnostic codes 570, 571, 574 – 577....344
Symptoms....344
Corrective action....344
Troubleshooting for over-temperature faults for inductors and transformers....346
Diagnostic codes 580 – 586, 589, 793....346
Symptoms....346
Corrective action....346
Troubleshooting for consumable part failure or no chopper current....349
Diagnostic codes 610 – 615 and 626 – 628....349
Symptoms....349
Corrective action....349
Troubleshooting for a ramp-down error....350
Diagnostic code 620....350
Symptoms....350
Corrective action....350
Troubleshooting for high DC bus voltage....351
Diagnostic code 621....351
Symptoms....351
Corrective action....351
Troubleshooting for low DC bus voltage....351
Diagnostic code 622....351
Symptoms....351
Corrective action....351
Troubleshooting for idle choppers with current....352
Diagnostic codes 623, 624, 625....352
Symptoms....353
Corrective action....353
Troubleshooting for current sensor faults....353
Diagnostic code 631....353
Symptoms....353
Corrective action....353
Troubleshooting for manual-set mode faults....354
Diagnostic code 648....354
Symptoms....354
1: Waiting for user input....354
2: Canceled: Firmware update....354
2: Canceled: Invalid configuration....355

2: Canceled: Set process..... 355
Troubleshooting for arc timeouts during the Ignite state..... 355
Diagnostic code 654..... 355
Symptoms..... 355
Corrective action..... 355
Troubleshooting for current in chopper during preflow..... 355
Diagnostic code 655..... 355
Symptoms..... 356
Corrective action..... 356
Troubleshooting for a console reset message..... 356
Diagnostic code 691..... 356
Symptoms..... 356
Corrective action..... 356
Troubleshooting for low inlet pressure for hydrogen, argon, or nitrogen..... 357
Diagnostic codes 695 – 697..... 357
Symptoms..... 357
Corrective action..... 357
Permitted inlet pressures to gas connect consoles..... 358
Troubleshooting for low inlet pressure for F5 gas..... 358
Diagnostic code 700..... 358
Symptoms..... 359
Corrective action..... 359
Troubleshooting for low inlet pressure for water..... 359
Diagnostic code 701..... 359
Symptoms..... 360
Corrective action..... 360
Troubleshooting for shield gas inlet pressure in the TorchConnect console..... 361
Diagnostic codes 702 – 705..... 361
Symptoms..... 362
Corrective action..... 362
Permitted inlet pressures to the TorchConnect console..... 363
Troubleshooting for process-gas inlet pressure faults in the TorchConnect console for OptiMix systems..... 363
Diagnostic codes 702, 705, 769, and 770..... 363
Symptoms..... 364
Corrective action to adjust the N_2 regulator..... 365
Corrective action to adjust the Ar regulator..... 366
Troubleshooting for pressure transducer faults..... 367

Diagnostic codes 706 – 715 367
Symptoms 368
Corrective action 368
Troubleshooting for invalid processes 369
Diagnostic code 716 369
Symptoms 369
1: invalid id 369
2: invalid user 370
3: invalid user source 370
4: invalid process 370
5: not allowed or system not ready 370
6: not supported 371
Troubleshooting flowchart for diagnostic code 716 371
Troubleshooting for duty cycle limit on proportional valve supply voltage 375
Diagnostic code 719 375
Symptoms 375
Corrective action 375
Troubleshooting for pressure out is greater than pressure in 375
Diagnostic code 720 375
Symptoms 376
Corrective action 376
Troubleshooting for gas mixture faults 376
Diagnostic codes 721 – 723, 726 376
Symptoms 376
Corrective action 377
Troubleshooting for gas mixture communication errors 377
Diagnostic codes 724, 725, 742, 743 377
Symptoms 377
Corrective action 377
Troubleshooting for solenoid valve V1 in the TorchConnect console 378
Diagnostic code 730 378
Symptoms 378
Corrective action 378
Troubleshooting for solenoid valves V4 – V12 in the TorchConnect console 378
Diagnostic codes 733 – 741 378
Symptoms 379
Corrective action 379
Fan diagnostic codes diagram 379

Troubleshooting for low fan speeds – MAGFAN....380
Diagnostic codes 744 – 746....380
Symptoms....381
Corrective action for code 744....381
Corrective action for code 745....381
Troubleshooting for low fan speeds – HXFAN....382
Diagnostic codes 748 and 749....382
Symptoms....382
Corrective action....382
Troubleshooting for low fan speeds – CTRLFAN 1 / CAB FAN 1....383
Diagnostic codes 747 and 750....383
Symptoms....383
Corrective action....383
Troubleshooting for low fan speeds – CTRLFAN 2....384
Diagnostic code 751....384
Symptoms....384
Corrective action....384
Troubleshooting for phase errors in choppers....385
Diagnostic codes 752, 753, 754....385
Symptoms....385
Corrective action....385
Troubleshooting for gas inlet pressure faults....386
Diagnostic codes 768 – 771....386
Symptoms....386
Corrective action....386
Troubleshooting for high or low chopper voltage....387
Diagnostic codes 779, 780, 781....387
Symptoms....387
Corrective action....387
Troubleshooting for high voltage on the 24 V power supply....388
Diagnostic code 784....388
Symptoms....388
Corrective action....388
Troubleshooting for fieldbus communication faults....388
Diagnostic code 789....388
Symptoms....389
1: PDO read....389
2: Start on noise....389

3: Start off noise..... 389
4: Hold on noise..... 389
5: Hold off noise..... 390
6: Pierce on noise.....390
7: Pierce off noise..... 390
8: SPI communication timeout..... 390
PCB information..... 391
Plasma power supply power distribution PCB (141425) diagram.....391
Plasma power supply control PCB (141545) diagram..... 392
DIP switch positions..... 393
Plasma power supply chopper PCB (10085242) diagram.....396
Plasma power supply start circuit PCB (141360) diagram..... 397
Plasma power supply I/O PCB (10081573) diagram.....397
Fan power distribution PCB (141384) diagram..... 397
Gas connect console control PCB (141375) diagram..... 398
Gas connect console high frequency PCB (141563) diagram..... 399
Torch connect console ohmic PCB (141368) diagram..... 400
Torch connect console control PCB (141334) diagram.....401

9 Parts List..... 403

Plasma power supply parts.....403
Outer panel parts.....404
Fans.....405
Heat exchanger..... 406
Coolant system parts..... 406
Coolant adapters in the rear compartment.....408
Other adapters not shown.....408
Transformers and inductors..... 409
Control side – view 1.....410
Control side – view 2.....411
Wire harnesses and CAN cables in plasma power supply.....412
Rear compartment of the plasma power supply.....412
Gas connect console parts.....414
Gas connect console high-voltage side parts (CorePlus shown).....415
Gas connect console manifold side parts.....416
Core gas connect console manifolds and adapters.....418
CorePlus gas connect console manifolds and adapters.....419
VWI gas connect console input and output manifolds and adapters.....420

OptiMix gas connect console input and output manifolds and adapters..... 422
VWI and OptiMix gas connect console mixer, transducers, and valves.....423
Gas connect console wire harness, hose kit, and CAN cables.....424
TorchConnect console parts.....425
TorchConnect console EasyConnect side.....426
TorchConnect console – top.....426
TorchConnect console manifold side – view 1.....427
TorchConnect console manifold side – view 2.....428
TorchConnect console front adapters and valves.....429
Torch assembly..... 430
Torch bracket.....430
Consumable starter kits.....431
Mild steel consumable starter kit (428840)..... 431
Stainless steel and aluminum consumable starter kit (428843)..... 432
Mild steel consumable starter kit with torch (428842).....433
Stainless steel and aluminum consumable starter kit with torch (428841).....434
Core and CorePlus console non-ferrous consumable starter kit (428944).....435
Other consumable and torch parts..... 436
Cable, hose, and lead parts.....436
Pilot-arc cables with strain relief..... 436
Negative cables with strain relief.....437
Power cable, 120 VAC.....437
Coolant-hose assemblies (plasma power supply to gas connect console).....438
CAN cables.....438
Pilot-arc and coolant assemblies (Core, CorePlus)..... 439
Power, CAN, and 3-gas assemblies (Core)..... 439
Power, CAN, and 4-gas assemblies (CorePlus)..... 440
Pilot-arc, coolant-hose, and shield-water assemblies (VWI, OptiMix).....440
Power, CAN, and 5-gas assemblies (VWI, OptiMix).....441
EtherCAT and Ethernet LAN interface cables..... 441
Discrete interface cables..... 442
Discrete cables for the expansion PCB..... 443
Serial CNC interface cables..... 443
Work cables..... 444
Torch leads..... 445
Bevel torch leads and bevel robotic leads..... 445
Robotic through-arm leads.....446
Short torch..... 446

Oxygen hoses (blue)..... 446
Nitrogen or Argon hoses (black)..... 447
Air hoses (black)..... 447
Hydrogen or nitrogen-hydrogen (F5) hoses (red)..... 448
Water (optional shield fluid) hoses (blue)..... 448
Preventive maintenance kits..... 449
Tools..... 449
Recommended spare parts..... 449
Plasma power supply – recommended spare parts..... 449
Gas connect consoles – recommended spare parts..... 451
TorchConnect console – recommended spare parts..... 451
Torch – recommended spare parts..... 451
Descriptions of warning label icons..... 452

10 Wiring Diagrams..... 453

Wiring diagram conventions..... 453
Wiring diagram symbols..... 453
Torch symbols..... 455
Valve states during operation..... 455
Valve states by process ID..... 456
Overview (Sheet 1 of 23)..... 473
Plasma power supply 1 (Sheet 2 of 23)..... 474
Plasma power supply 2 (Sheet 3 of 23)..... 475
Plasma power supply 3 (Sheet 4 of 23)..... 476
Plasma power supply 4 (Sheet 5 of 23)..... 477
Plasma power supply 5 (Sheet 6 of 23)..... 478
Plasma power supply 6 (Sheet 7 of 23)..... 479
Plasma power supply 7 (Sheet 8 of 23)..... 480
Gas connect console 1 (Sheet 9 of 23)..... 481
Gas connect console 2 (Sheet 10 of 23)..... 482
TorchConnect console (Sheet 11 of 23)..... 483
Coolant system (Sheet 12 of 23)..... 484
Gas system 1 Core (Sheet 13 of 23)..... 485
Gas system 2 CorePlus (Sheet 14 of 23)..... 486
Gas system 3 VWI (Sheet 15 of 23)..... 487
Gas system 4 OptiMix (Sheet 16 of 23)..... 488
EtherCAT multi-drop (multi-system) interface (Sheet 17 of 23)..... 489
Serial RS-422 and discrete multi-drop (multi-system) interface (Sheet 18 of 23)..... 490

Discrete multi-drop (multi-system) interface (Sheet 19 of 23).....491
EtherCAT connection to EDGE Connect (Sheet 20 of 23).....492
Discrete and serial RS-422 CNC connections (Sheet 21 of 23).....493
Discrete CNC connections (Sheet 22 of 23).....494
Wireless subsystem block diagram (Sheet 23 of 23).....495

Electromagnetic Compatibility (EMC) introduction

Hypertherm's CE-marked equipment is built in compliance with standard EN60974-10. The equipment should be installed and used in accordance with the information below to achieve electromagnetic compatibility.

The limits required by EN60974-10 may not be adequate to completely eliminate interference when the affected equipment is in close proximity or has a high degree of sensitivity. In such cases it may be necessary to use other measures to further reduce interference.

This cutting equipment is designed for use only in an industrial environment.

Installation and use

The user is responsible for installing and using the plasma equipment according to the manufacturer's instructions.

If electromagnetic disturbances are detected then it shall be the responsibility of the user to resolve the situation with the technical assistance of the manufacturer. In some cases this remedial action may be as simple as earthing the cutting circuit, see Earthing of the workpiece. In other cases, it could involve constructing an electromagnetic screen enclosing the power source and the work complete with associated input filters. In all cases, electromagnetic disturbances must be reduced to the point where they are no longer troublesome.

Assessment of area

Before installing the equipment, the user shall make an assessment of potential electromagnetic problems in the surrounding area. The following shall be taken into account:

a. Other supply cables, control cables, signaling and telephone cables; above, below and adjacent to the cutting equipment.

b. Radio and television transmitters and receivers.

c. Computer and other control equipment.

d. Safety critical equipment, for example guarding of industrial equipment.

e. Health of the people around, for example the use of pacemakers and hearing aids.

f. Equipment used for calibration or measurement.

g. Immunity of other equipment in the environment. User shall ensure that other equipment being used in the environment is compatible. This may require additional protection measures.

h. Time of day that cutting or other activities are to be carried out.

The size of the surrounding area to be considered will depend on the structure of the building and other activities that are taking place. The surrounding area may extend beyond the boundaries of the premises.

Methods of reducing emissions

Mains supply

Cutting equipment must be connected to the mains supply according to the manufacturer's recommendations. If interference occurs, it may be necessary to take additional precautions such as filtering of the mains supply.

Consideration should be given to shielding the supply cable of permanently installed cutting equipment, in metallic conduit or equivalent. Shielding should be electrically continuous throughout its length. The shielding should be connected to the cutting mains supply so that good electrical contact is maintained between the conduit and the cutting power source enclosure.

Maintenance of cutting equipment

The cutting equipment must be routinely maintained according to the manufacturer's recommendations. All access and service doors and covers should be closed and properly fastened when the cutting equipment is in operation. The cutting equipment should not be modified in any way, except as set forth in and in accordance with the manufacturer's written instructions. For example, the spark gaps of arc striking and stabilizing devices should be adjusted and maintained according to the manufacturer's recommendations.

Cutting cables

The cutting cables should be kept as short as possible and should be positioned close together, running at or close to the floor level.

Equipotential bonding

Bonding of all metallic components in the cutting installation and adjacent to it should be considered.

However, metallic components bonded to the workpiece will increase the risk that the operator could receive a shock by touching these metallic components and the electrode (nozzle for laser heads) at the same time.

The operator should be insulated from all such bonded metallic components.

Earthing of the workpiece

Where the workpiece is not bonded to earth for electrical safety, nor connected to earth because of its size and position, for example, ship's hull or building steel work, a connection bonding the workpiece to earth may reduce emissions in some, but not all instances. Care should be taken to prevent the earthing of the workpiece increasing the risk of injury to users, or damage to other electrical equipment. Where necessary, the connection of the workpiece to earth should be made by a direct connection to the workpiece, but in some countries where direct connection is not permitted, the bonding should be achieved by suitable capacitances selected according to national regulations.

Note: The cutting circuit may or may not be earthed for safety reasons. Changing the earthing arrangements should only be authorized by a person who is competent to assess whether the changes will increase the risk of injury, for example, by allowing parallel cutting current return paths which may damage the earth circuits of other equipment. Further guidance is provided in IEC 60974-9, Arc Welding Equipment, Part 9: Installation and Use.

Screening and shielding

Selective screening and shielding of other cables and equipment in the surrounding area may alleviate problems of interference. Screening of the entire plasma cutting installation may be considered for special applications.

1 Specifications

XPR terminology for plasma cutting

XPR® cutting system

The plasma power supply, gas connect console, torch connect console, and torch.

Cutting system or cutting machine

The XPR cutting system, Computer Numerical Control (CNC), torch lifter, cutting table, and other components.

Wet process

Any process that uses water as a shield fluid.

Dry process

Any process that does not use water as a shield fluid.

Ferrous

Mild steel

Non-ferrous

Stainless steel and aluminum

Gases and fluid

Hydrogen (H_2), argon (Ar), nitrogen (N_2), oxygen (O_2), water (H_2O), F5 (95% nitrogen, 5% hydrogen)

Mixed-fuel gas

A mixture of H_2-Ar-N_2 supplied by the OptiMix™ gas connect console.

Plasma cutting system description and components

The plasma cutting system has at least four primary components and can cut a wide range of metals.

XPR plasma cutting systems are made for indoor use with correct ventilation to cut a wide range of thicknesses of mild steel, stainless steel, and aluminum.

An XPR plasma cutting system has these primary components:

- Plasma power supply
- Gas connect console
- TorchConnect™ console
- Torch

Plasma power supply description

The plasma power supply is a 170 A, 210 VDC constant-current supply. It contains a heat exchanger, fans, and a pump to cool the torch and other electronic components.

The plasma power supply has support for EtherCAT®, wireless, RS-422 serial, and discrete communication protocols to communicate with a CNC or wireless device.

The power-indicator Light Emitting Diode (LED) on the plasma power supply identifies power status:

- It illuminates amber when the plasma power supply is receiving electric power and the remote on-off switch is in the OFF position.
- It illuminates green when the plasma power supply is receiving electric power and both the standard remote on-off switch and the redundant remote on-off switch (if enabled) are in the ON position.

Gas connect consoles description

There are four types of gas connect consoles: Core™, CorePlus™, VWI™ (vented water injection), and OptiMix.

Each type of gas connect console provides a different set of gas-control capabilities. This can include gas-metering functions, based on the type of gas connect console and gases. The gas connect console has a control Printed Circuit Board (PCB) and an ignition PCB. If your XPR cutting system is equipped with an OptiMix gas connect console, there is also a gas mixer that has its own control PCB. A green power LED illuminates when power is supplied to the console.

For some cutting systems, a remote on-off switch and redundant remote on-switch (if enabled) control the power that goes to the console.

The CorePlus gas connect console has many of the same features as the Core console. The primary difference is that CorePlus adds a gas line for Argon. To use a CorePlus console, you must install revision U (or later) of the XPR firmware. Refer to the *XPR Firmware Updates Field Service Bulletin (10084813)*. Technical documentation is available at www.hypertherm.com/docs.

TorchConnect console description

The TorchConnect console supplies all power, gas, and cooling connections for connection to the torch.

The TorchConnect console has proportional valves, solenoid valves, and pressure transducers. The TorchConnect console also has a control PCB and an ohmic contact PCB. A power-indicator LED illuminates when power is supplied to the console.

For some cutting systems, a remote on-off switch and redundant remote on-on switch (if enabled) control the power that goes to the console.

Torch description

The torch assembly has a torch mount-sleeve, torch receptacle, torch, and water tube.

The torch receptacle has a gas-selection valve. Consumables are installed on the torch.

The torch head in the XPR torch-assembly kit has 170 A mild steel consumable parts installed on it. Refer to Consumable starter kits on page 431 if necessary.

For information about how to select consumables for your cutting or marking applications, refer to the *XPR Cut Charts Instruction Manual (809830)*.

Plasma power supply specifications

The part number and some specifications differ for each type of plasma power supply.

Figure 1 - Plasma power supply dimensions

Figure 1 - Plasma power supply dimensions (continued)

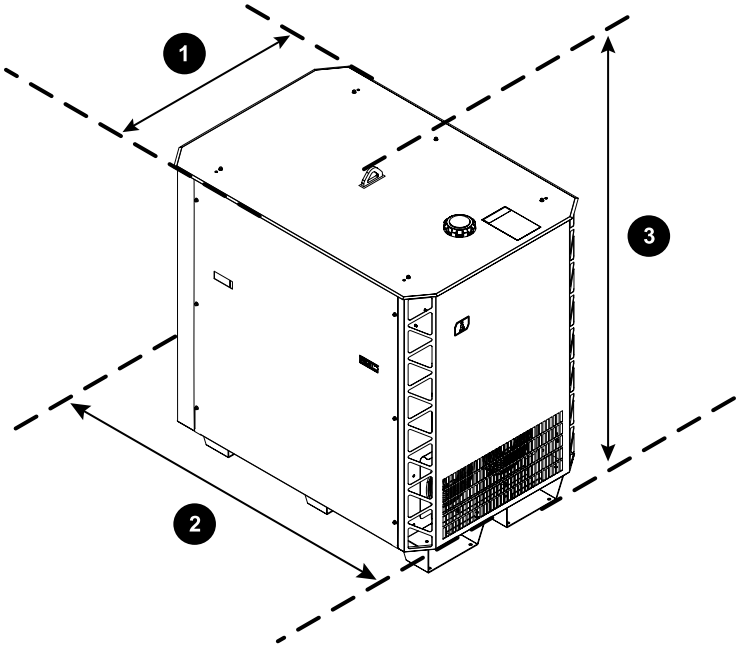

1 842 mm (33.14 in.)

2 1,238 mm (48.75 in.)

3 1,248 mm (49.12 in.)

Table 1 - Plasma power supply general specifications

Maximum open-circuit voltage (U_0)	360 VDC
Maximum output current (I_2)	170 A
Output voltage (U_2)	50 VDC – 210 VDC
Duty cycle rating (X)	100% at 35.7 kW, 40°C (104°F)
Operational ambient temperature range	>0°C - 40°C (>32°F - 104°F) - Applies only to cutting systems that use water as a shield fluid. -10 °C - 40°C (14°F - 104°F) - Applies only to cutting systems that do not use water as a shield fluid. Only VWI- and OptiMix-equipped cutting systems can use water as a shield fluid.
Power factor (cosθ)	0.98 at 35.7 kW
Cooling	Forced air (Class F)
Insulation	Class H

Table 1 - Plasma power supply general specifications (continued)

EMC emissions classification (CE models only)	Class A
Lift points	Top lift eye Bottom lift truck slots
Lift eye weight rating	680 kg (1,500 lb)
Weight	454 kg (1,002 lb)

Table 2 - Plasma power supply part numbers and specifications

Part number	Voltage (U_1)	Phase	Frequency	Rated input current at kW output (I_1)	Regulatory approval Safety/EMC	Power (± 10%) (U_1 X I_1 X1.73)
078640	200 VAC	3	50 Hz - 60 Hz	117 A	cCSAus	40.48 kVA
078641	208 VAC		60 Hz	112 A	cCSAus	
078642	220 VAC		50 Hz - 60 Hz	106 A	cCSAus	
078643	240 VAC		60 Hz	97 A	cCSAus	
078644	380 VAC		50 Hz - 60 Hz	62 A	CCC	
078645	400 VAC		50 Hz - 60 Hz	59 A	CE, RCM, EAC, UKr, and AAA	
078646	415 VAC		50 Hz	56 A	CE, RCM, EAC, UKr, and AAA	
078647	440 VAC		60 Hz	53 A	cCSAus	
078648	480 VAC		60 Hz	49 A	cCSAus	
078649	600 VAC		60 Hz	39 A	cCSAus	

The data plate on the rear of the plasma power supply has two sets of ratings:

- The **HYP** ratings are Hypertherm® plasma power supply ratings. They show the capacity of the system related to internal testing done by Hypertherm.

- The **IEC** ratings are the minimum ratings that the system must get to meet the requirements of International Electrotechnical Commission (IEC) standard 60974-1.

CSA, CE, and CCC data plates can differ slightly.

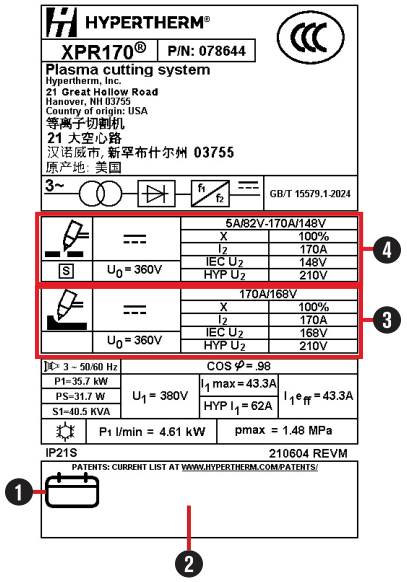

1 Date made

2 Serial number, bar code

3 Plasma gouging ratings

4 Plasma cutting ratings

Table 3 - Data-plate abbreviations

HYP =	Hypertherm internal rating
IEC =	IEC rating
I_1=	Input current (A)
I_2=	Conventional welding current (A)
PF =	Power factor
U0 =	Rated no load voltage (V)
U1 =	Input voltage (V)
U2 =	Conventional welding voltage (V)
X =	Duty cycle

Ecodesign requirements for CE models

Table 4 - Ecodesign requirements and data

Ecodesign requirement	Idle	With load	Description
Output current	–	170.55 A	Measured at the rated duty cycle for the system at the highest output power.
Output voltage	–	213.57 V	
Output active power	–	36.41 kW	
Root Mean Square (RMS) of the supply voltage	401.46 V	399.31 V	Measured at idle state and at the rated duty cycle for the system at the highest output power.
Supply active power	31.7 W	40.49 W	
Total harmonic distortion of the supply voltage (UTHD)	1.41%	4.23%	
Idle state power consumption by the power source	31.7 W	–	Measured at idle state. [1]
Efficiency	–	89.91%	Calculated at the rated duty cycle for the system at the highest output power.

1 External devices were disconnected during idle measurement.

XPR170 China energy label

The rear panel of the XPR170® plasma power supply can have a China energy label with energy-efficiency information.



1 Energy-efficiency rating: Level 1 is most efficient, level 3 is least efficient

2 Manufacturer name and plasma power supply model

3 Energy efficiency (%)

4 Rated output current, power factor under load, and no-load current

Table 5 - Energy-efficiency specifications for the XPR170 plasma power supply

Input voltage	Efficiency rating	Efficiency (%)	Rated current (A)	Power factor under load	No-load current
380	2	89.0	170	0.90	/

Gas connect console specifications

The part number and some specifications differ for each type of gas connect console.

Do not remove the inlet check valves from the gas connect console.

Figure 2 - Gas connect console dimensions

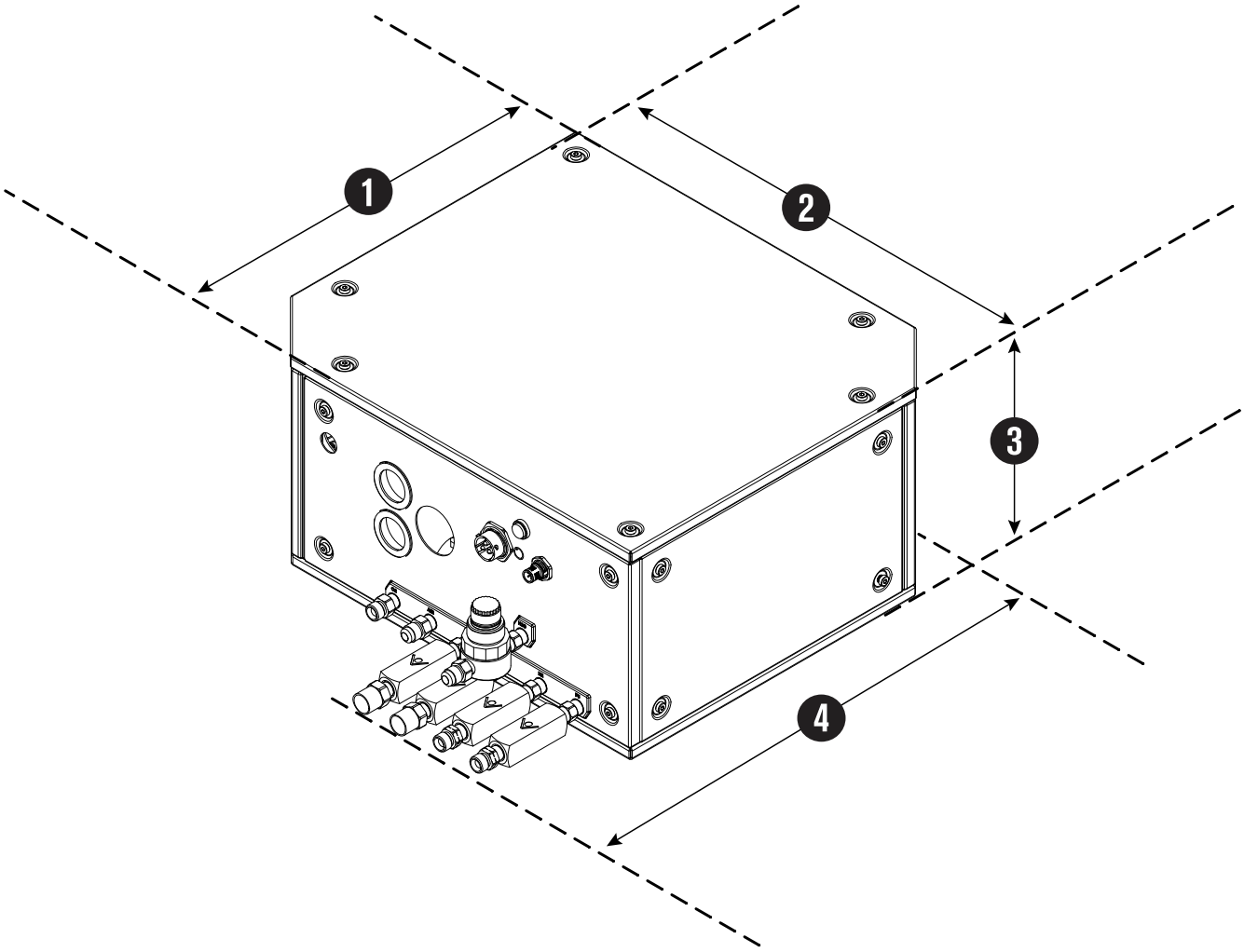

Table 6 - Dimensions, weight, and part number for each gas connect console

Gas connect console	Part number	Dimension 1	Dimension 2	Dimension 3	Dimension 4 (with fittings)	Weight
Core	078631	374.65 mm (14.75 in.)	383.80 mm (15.11 in.)	205.99 mm (8.12 in.)	426.44 mm (16.79 in.)	16.2 kg (35.7 lb)
CorePlus	078662				426.43 mm (16.79 in.)	16.8 kg (37.1 lb)
VWI	078632				501.43 mm (19.74 in.)	19.1 kg (42.1 lb)
OptiMix	078633		434.59 mm (17.11 in.)		500.50 mm (19.70 in.)	26.0 kg (57.3 lb)



For mounting dimensions, refer to Put the gas connect console in position on page 92.

TorchConnect console specifications

There is one TorchConnect console for all XPR system configurations. Use these dimensions for console mounting or placement.

Do not remove the inlet check valves from the TorchConnect console.

Figure 3 - TorchConnect console dimensions and weight

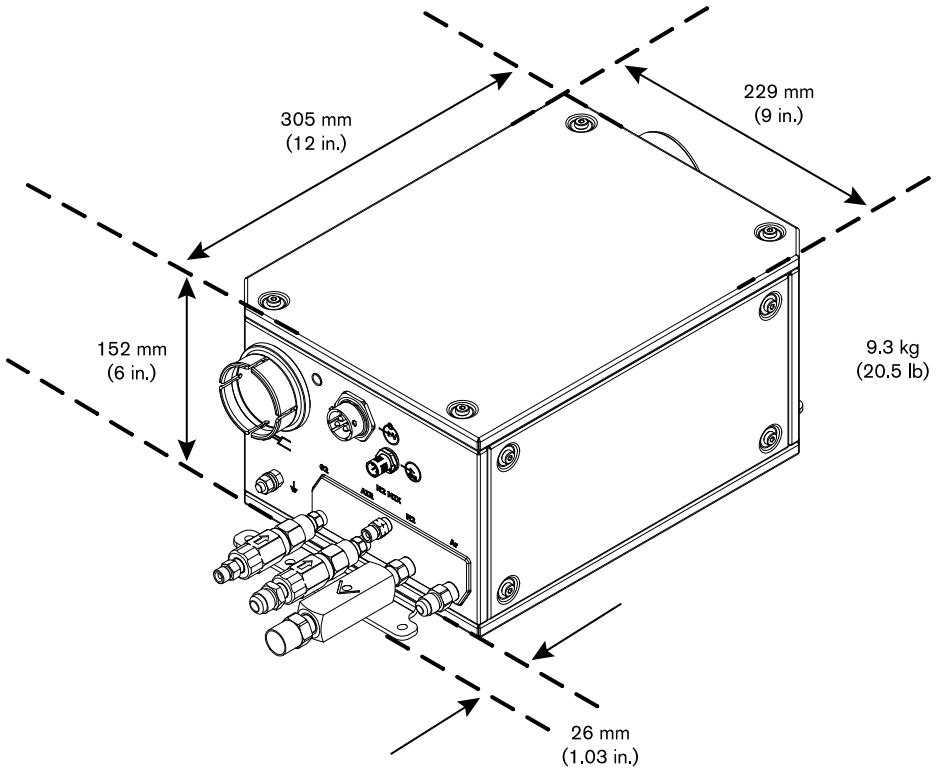

The factory location for the mounting brackets is on the bottom of the TorchConnect console. However, you can move the mounting brackets to either side. Console placement with the torch lead connection on the bottom keeps to a minimum the risk of leaked water or coolant collecting inside of the console. Water or coolant collection inside of the TorchConnect console can cause damage to internal electric components.

For mounting dimensions, refer to Put the TorchConnect console in position on page 94.

Torch specifications

The dimensions and weight differ for each type of torch and torch sleeve. But the general specifications are the same for all torch configurations.

Figure 4 - Torch dimensions

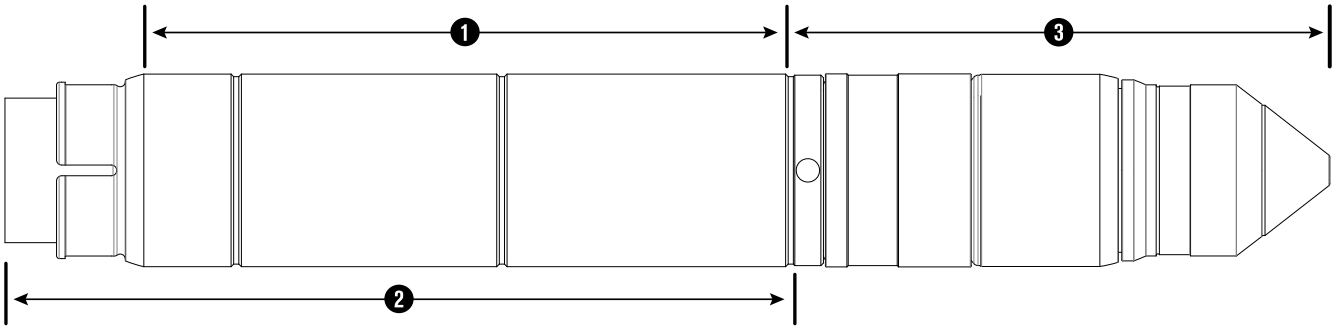

Table 7 - Torch and sleeve characteristics

Sleeve type	Clamp-surface length (1)	Overall sleeve length (2)	Quick-disconnect torch with consumables (3)	Combined weight (torch head, receptacle, consumables)	Combined weight with sleeve
Short	111.7 mm (4.4 in.)	155 mm (6.1 in.)	160.8 mm (6.33 in.)	1.4 kg (3 lb)	1.5 kg (3.3 lb)
Standard	189.6 mm (7.5 in.)	233 mm (9.2 in.)			1.6 kg (3.6 lb)
Extended	268.1 mm (10.6 in.)	311 mm (12.3 in.)			1.7 kg (3.9 lb)

The part number and some specifications for your torch can change because of torch sleeve dimensions and other features. Refer to Torch assembly on page 430.

Table 8 - General torch specifications

Rated arc striking voltage	16.3 kV
Maximum gas pressure at inlet	7.9 bar, 792 kPa (115 psi)
Minimum gas pressure at inlet	7.2 bar, 723 kPa (105 psi)
Maximum torch-side and torch-front force	22.5 kg (50 lb)

Critical raw materials

Critical raw material	Components that contain more than 1 gram
Borate	Each PCB, torch, torch mounting sleeve
Magnesium	Heatsinks, cold plates
Natural graphite	Pump motor, resistors
Phosphorus	Sheet metal panels
Rare earth elements (heavy and light)	Torch breakaway, pump motor
Silicon metal	Heatsinks, cold plates, transformers, inductors, Insulated-gate Bipolar Transistor (IGBT) modules
Tantalum	Capacitors
Tungsten	Power resistors

Safety and EMC symbols and marks

You can see different safety and EMC symbols and marks on your system. Each image identifies a specific regional certification.

Your product may have one or more of the following marks on or near the data plate. Because of differences and conflicts in national regulations, not all marks are applied to every version of a product.

S mark

The S mark indicates that the power supply and torch are suitable for operations carried out in environments with increased hazard of electrical shock according to IEC 60974-1.

CSA mark

Products with a CSA mark meet the United States and Canadian regulations for product safety. The products were evaluated, tested, and certified by CSA-International. Alternatively, the product may have a mark by one of the other Nationally Recognized Testing Laboratories (NRTL) accredited in both the United States and Canada, such as UL or TÜV.



CE mark

The CE marking signifies the manufacturer's declaration of conformity to applicable European directives and standards. Only those versions of products with a CE marking located on or near the data plate comply with European Directives. Applicable directives may include the European Low Voltage Directive, the European Electromagnetic Compatibility (EMC) Directive, the Radio Equipment Directive (RED), and the Restriction of Hazardous Substances (RoHS) Directive. See the European CE Declaration of Conformity for details.



Eurasian Customs Union (CU) mark

CE versions of products that include an EAC mark of conformity meet the product safety and EMC requirements for export to Russia, Belarus, and Kazakhstan.



GOST-TR mark

CE versions of products that include a GOST-TR mark of conformity meet the product safety and EMC requirements for export to the Russian Federation.



RCM mark

CE versions of products with an RCM mark comply with the EMC and safety regulations required for sale in Australia and New Zealand.



CCC mark

The China Compulsory Certification (CCC) mark indicates that the product has been tested and found compliant with product safety regulations required for sale in China.



UkrSEPRO mark

The CE versions of products that include a UkrSEPRO mark of conformity meet the product safety and EMC requirements for export to the Ukraine.



Serbian AAA mark

CE versions of products that include a AAA Serbian mark meet the product safety and EMC requirements for export to Serbia.

RoHS mark

The RoHS mark indicates that the product meets the requirements of the European Restriction of Hazardous Substances (RoHS) Directive.

United Kingdom Conformity Assessed mark

CE versions of products that include a UKCA mark of conformity meet the product safety, EMC, RF, and RoHS requirements for export to the UK.

IEC symbols

You can see different IEC symbols on the system. Each image has a specific meaning in the context of operating a plasma cutting system.

The following symbols can appear on the data plate, control labels, and switches.



Direct current (DC)



Alternating current (AC)



Plasma torch cutting



Gouging



AC input power connection



The terminal for the external protective (earth) (PE) conductor

Power is ON



Power is OFF

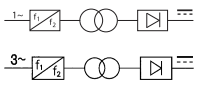

A 1-phase or 3-phase inverter-based power source



Volt/amperage curve, “drooping” characteristic

2 Qualifications and Requirements

Document requirements

This manual refers to several other documents. These documents include:

- *XPR Cut Charts Instruction Manual (809830)*
- *CNC Communication Protocol for the XPR Cutting System (10085793)*
- *XPR Preventive Maintenance Program (PMP) Instruction Manual (809490)*
- *XPR Firmware Updates Field Service Bulletin (10084813)*

The most recent revisions of technical documents are available at www.hypertherm.com/docs.

Technical documentation is current as of the date of its release. Subsequent revisions are possible.

Operator qualifications

A person is considered qualified to operate the cutting system if he or she is trained and knowledgeable about cutting system equipment construction, operation, and work methods, and about how to recognize and avoid hazards that can be present with certain cutting system equipment or work methods.

⚠ WARNING



ELECTRIC SHOCK CAN KILL

The plasma power supply contains dangerous electric voltages that can seriously injure or kill you. Even if the plasma power supply is turned OFF, you can still get a serious electric shock if the plasma power supply remains connected to an electric power source.

Use extreme caution if you do diagnosis or maintenance tasks when the plasma power supply remains connected to an electric power source and the outer cover or panels are removed. All work that requires removal of the plasma power supply outer cover or panels must be done by a qualified technician. Refer to the *Safety and Compliance Manual (80669C)* for more safety information.

For your safety and for the best results:

- **Never** operate the cutting system unless you are qualified to do so.
- Follow NFPA70E Section 85 in North America.
- Follow IEC 60364 series outside of North America.
- Follow OSHA Section1910.331-335 in North America for 600 volts or less.
- Follow all national and local electrical safety requirements for both operator and service personnel.
- **Always** read, understand, and follow all of the safety instructions in this manual, the *Safety and Compliance Manual (80669C)*, and on the labels that are on the cutting system.
- Get adequate operator training from a knowledgeable source **before** operation. Adequate training topics include (but are not limited to) the following:
  - How to start and stop the cutting system during routine operation and in an emergency.
  - Conditions and actions that can cause injuries to people or damage cutting system equipment.
  - How to operate all controls.
  - How to identify and respond to fault conditions.
  - How to do maintenance.
  - A copy of the instruction manual.
- Do **not** operate the cutting system if you cannot follow all of the safety instructions or if you cannot satisfy the minimum operator qualifications. Refer to the *Safety and Compliance Manual (80669C)*, *Radio Frequency Warning Manual (80945C)*, and Before you begin installation on page 79.

Additional qualifications apply for personnel who do maintenance and troubleshooting. Refer to Qualifications of service personnel on page 43.

Qualifications of service personnel

It can be hazardous to do service and maintenance on industrial cutting systems and equipment.

⚠ WARNING



ELECTRIC SHOCK CAN KILL

The plasma power supply contains dangerous electric voltages that can seriously injure or kill you. Even if the plasma power supply is turned OFF, you can still get a serious electric shock if the plasma power supply remains connected to an electric power source.

Use extreme caution if you do diagnosis or maintenance tasks when the plasma power supply remains connected to an electric power source and the outer cover or panels are removed. All work that requires removal of the plasma power supply outer cover or panels must be done by a qualified technician. Refer to the *Safety and Compliance Manual (80669C)* for more safety information.

For your safety and for the best results:

- **Always** read, understand, and follow all of the safety instructions in this manual, the *Safety and Compliance Manual (80669C)*, and on the labels that are on the cutting system.
- Get adequate training from a knowledgeable source **before** you do any service or maintenance on the cutting system or equipment.

  The entity responsible for workplace safety where your XPR cutting system is used must do a risk assessment and establish the criteria for service personnel training and qualifications.

- Do not do any service or maintenance on the cutting system or equipment if you cannot follow all of the safety instructions or if you cannot satisfy the minimum service-personnel qualifications set by workplace safety at your organization. Refer to the *Safety and Compliance Manual (80669C)*, *Radio Frequency Warning Manual (80945C)*, and Before you begin installation on page 79.
- Contact a professional repair person who has a license.

System electrical requirements

Electrical codes and requirements

- Follow all national and local electrical codes and safety requirements, including requirements for correct electrical system design and installation.
- Speak with a licensed electrician for information about the codes in your location.

General input power requirements

The switches, fuses, and cords that you supply must comply with all applicable national and local electrical codes and requirements, and be installed by a licensed electrician.

⚠ WARNING



ELECTRIC SHOCK CAN KILL

The plasma power supply contains dangerous electric voltages that can seriously injure or kill you. Even if the plasma power supply is turned OFF, you can still get a serious electric shock if the plasma power supply remains connected to an electric power source.

Use extreme caution if you do diagnosis or maintenance tasks when the plasma power supply remains connected to an electric power source and the outer cover or panels are removed. All work that requires removal of the plasma power supply outer cover or panels must be done by a qualified technician. Refer to the *Safety and Compliance Manual (80669C)* for more safety information.

As an installer or user, you are responsible for supplying all of the switches, time-delay fuses, and power cords necessary for cutting system installation and operation at the installation site.

General input power requirements are in the following table. For specific requirements for switches, fuses, and cords, refer to Line-disconnect switch requirements on page 45, Circuit breaker or fuse requirements on page 46, and Main power cord requirements on page 46.

Table 9 - Input power requirements

Part number	Input voltage	Phase	Rated input current at kW output	Recommended time-delay fuse size	Recommended size for the main power cord 90°C (194°F) [1]	Power
078640	200 VAC	3	117 A	150 A	70.5 mm^2 (1/0 AWG) [2]	40.48 kVA
078641	208 VAC		112 A	150 A	70.5 mm^2 (1/0 AWG) [2]	
078642	220 VAC		106 A	150 A	70.5 mm^2 (1/0 AWG) [2]	
078643	240 VAC		97 A	125 A	43.2 mm^2 (2 AWG) [2]	
078644	380 VAC		62 A	80 A	27.3 mm^2 (4 AWG) [2]	
078645	400 VAC		59 A	80 A	27.3 mm^2 (4 AWG) [2]	
078646	415 VAC		56 A	70 A	17.2 mm^2 (6 AWG)	
078647	440 VAC		53 A	70 A	17.2 mm^2 (6 AWG)	
078648	480 VAC		49 A	65 A	17.2 mm^2 (6 AWG)	
078649	600 VAC		39 A	50 A	10.8 mm^2 (8 AWG)	

1 AWG requirements must comply with the latest version of the U.S. National Electric Code (in North America) or the latest electric wiring and installation requirements (based on the codes in your location). This table is for reference only; the requirements for your location can be different. Comply with all national and local electrical codes in your location.

2 Differences in cross-sectional diameters mm^2 depend on the strand variations of each cable.

The strain relief for the input power cord that comes with the plasma power supply is sized correctly. Speak with a licensed electrician to make sure that your main power cord size and length comply with the codes in your location.

Line-disconnect switch requirements

As an installer or user, you must supply a separate line-disconnect switch for the plasma power supply.

A means for disconnecting the cutting system shall be provided according to the installation, safety, and emergency requirements for the local codes and regulations, taking into account the input power requirements. Hypertherm does not supply this means of disconnection.

Circuit breaker or fuse requirements

You must use a circuit breaker or fuse that is sufficient to support the plasma cutting system.

For main feed protection, choose a circuit breaker or fuse that is large enough to withstand all branch-feed loads for both inrush and steady-state current. Refer to Table 9 on page 45 for the recommended time-delay fuse sizes.

As an installer or user, you must choose time-delay fuses and circuit breakers that can withstand inrush current that is up to 30 times the rated input current for 0.01 seconds and up to 12 times the rated input current for 0.1 seconds.

The size requirements for breakers or fuses at your site can change because of the following:

- Local line conditions (such as source and line impedance and voltage fluctuations)
- Product inrush characteristics
- Regulatory requirements

Always follow the national and local electrical safety requirements for your location, including requirements for correct electrical system design and installation. Speak with a licensed electrician for more information about the codes in your location.



If time-delay, high-inrush fuses are not permitted at your site because of national or local codes, use a motor-start circuit breaker or equivalent.

Main power cord requirements

As an installer or user, you must supply the main power cord for your cutting system.

Refer to Table 9 on page 45 for recommended main power cord size.

The recommended main power cord sizes are based on Table 310.16 of the *U.S. National Electric Code (2023 Handbook)*. Table 9 on page 45 shows stranded-flexible cord rates for 90°C (194°F). The size requirement for the main power cord at your site can change because of the following conditions:

- Wires with lower temperature ratings
- Wires with different insulation types
- Different distances between the line-disconnect switch or receptacle and the plasma power supply
- Local codes and regulations

The strain relief for the input power cord that comes with the plasma power supply is sized correctly. Speak with a licensed electrician to make sure that your main power cord size and length comply with the codes in your location.

Always follow the national and local electrical safety requirements for your location, including requirements for correct electrical system design and installation and main power cord size and length. Speak with a licensed electrician for more information about the codes in your location.

Input power requirements for CE units

CE cutting systems have special input power requirements.

This plasma cutting system complies with IEC 6100-3-11 and IEC 61000-3-12, provided that the Short-circuit power (Ssc) between the supply and the public system for the installation site is greater than (or equal to) 6.79 MVA. The installer or user is responsible for verifying that the Ssc for the installation site satisfies this requirement.

If necessary, you can consult with the distribution network operator for your site to verify the Ssc for your site.

This plasma cutting system is intended for use only in sites that have a service current capacity that is greater than (or equal to) 100 A per phase and supplied from a distribution network that has a nominal voltage of 400/230 V. The installer or user is responsible for verifying that the service current capacity for the installation site satisfies this requirement.

Remote on-off switch requirements

You must supply the remote on-off switch, or switches, for your cutting system.

⚠ WARNING



ELECTRIC SHOCK CAN KILL

The plasma power supply contains dangerous electric voltages that can seriously injure or kill you. Even if the plasma power supply is turned OFF, you can still get a serious electric shock if the plasma power supply remains connected to an electric power source.

Use extreme caution if you do diagnosis or maintenance tasks when the plasma power supply remains connected to an electric power source and the outer cover or panels are removed. All work that requires removal of the plasma power supply outer cover or panels must be done by a qualified technician. Refer to the *Safety and Compliance Manual (80669C)* for more safety information.

A remote on-off switch lets you supply electric power to or remove electric power from the gas connect console, TorchConnect console, and some parts of the plasma power supply from a location that is remote from the main power source. A convenient location for a remote on-off switch is near the CNC. As an user or installer, you must supply the remote on-off switch, or switches, for your cutting system.



For information about how to do this, refer to Install a remote on-off switch on page 209.

A feature of the control PCB is that it offers redundancy to one remote on-off switch. When the redundant remote on-off feature is selected, signals from two remote on-off switches are necessary for the plasma power supply to work.

A 24 VDC (500 mA) and return (GND) from the CNC or controlling device to the expansion PCB are necessary for redundant remote on-off for the expansion PCB and input to the control PCB. Make sure to use a separate cable between the redundant remote on-off input and main control PCB.



For information about how to do this, refer to Install a redundant remote on-off switch on page 215.

When at least one remote on-off switch is set to OFF (disabled), electric power remains ON (active) to the following parts:

- Power-indicator LED on the front of the plasma power supply
- Control PCB
- Control transformer (can be different on input and output)
- 24 V power source
- 120 VAC on the power distribution PCB
- 220 VAC on the power distribution PCB
- 120 VAC to the input side of the 48 V power relay

Process-gas requirements for all gas connect consoles

You must supply the process gases for your cutting system.

Process-gas requirements include the following:

- Nitrogen is required for all processes.
- Air is required for H_2 mix and F5 processes.
- Water can be used as a shield fluid for plasma power supplies that have a VWI or OptiMix gas connect console. Refer to Shield-water requirements (VWI and OptiMix) on page 55 for the specifications and requirements for water that is used for shield purposes.

Table 10 - Gas quality, pressure, and flow requirements

Gas	Quality	System inlet pressure (during gas flow [1])	Flow rate
O_2 (oxygen)	99.5% pure, clean, dry, oil-free	Core, CorePlus, VWI: 7.5 bar ± 0.4 (110 psi ± 5) OptiMix: 7.9 bar ± 0.4 (115 psi ± 5)	71 slpm (150 scfh)
N_2 (nitrogen)	99.99% pure, clean, dry, oil-free	Core, CorePlus, VWI: 7.5 bar ± 0.4 (110 psi ± 5) OptiMix: 8.3 bar ± 0.4 (120 psi ± 5)	181 slpm (380 scfh)
Air [2]	Clean, dry, oil free consistent with 8573-1:2010 Class 1.4.2	Core, CorePlus, VWI: 7.5 bar ± 0.4 (110 psi ± 5) OptiMix: 7.9 bar ± 0.4 (115 psi ± 5)	118 slpm (250 scfh)
H_2 (hydrogen)	99.995% pure	OptiMix: 8.3 bar ± 0.4 (120 psi ± 5)	50 slpm (105 scfh)
Ar (argon)	99.99% pure; clean, dry, oil-free	CorePlus, VWI: 7.5 bar ± 0.4 (110 psi ± 5) OptiMix: 8.3 bar ± 0.4 (120 psi ± 5)	118 slpm (250 scfh) [3]
F5 (95% nitrogen, 5% hydrogen)	99.98% pure	VWI: 7.5 bar ± 0.4 (110 psi ± 5) OptiMix: 7.9 bar ± 0.4 (115 psi ± 5)	40 slpm (85 scfh)

1 When there is **no** gas flow, make sure that the pressure at the gas inlet connection is less than 8.6 bar (125 psi) to prevent system alerts.

2 Air compressors must remove oil before they supply air to the cutting system.

3 Flow rate during argon marking and argon assist.

Table 11 - Air compressor requirements

Hypertherm recommends that air compressors supply air that complies with the requirements of ISO Standard 8573-1:2010 Class 1.4.2.

Maximum particle count in 1.0 m^3:	▪ 20,000 at 0.1 microns - 0.5 microns ▪ 400 at 0.5 microns - 1.0 microns ▪ 10 at 1.0 microns - 5.0 microns
Maximum water vapor pressure dew point:	3°C (37°F)
Maximum oil concentration:	0.1 mg/m^3 (for aerosol, liquid, and vapor)

Table 11 - Air compressor requirements (continued)

Speak to your air compressor manufacturer if you operate the cutting system in temperatures colder than 3°C (37°F) or if you are not sure that the air compressor complies with the ISO standard for air quality.

NOTICE

RUST IN GAS CYLINDERS CAN GET INTO THE GAS LINE

Rust can collect at the bottom of gas cylinders. If the rust mixes with the gas, it can get into the gas line and decrease cut quality and performance.

When you move gas cylinders, make sure that you do not put them on their side, roll, or shake them.

Plumbing requirements for supply gases

⚠ WARNING





OXYGEN GAS CAN CAUSE A FIRE HAZARD

If you use oxygen as the plasma gas for cutting, it can cause a potential fire hazard due to the oxygen-enriched atmosphere that collects. A fire can occur if oxygen is not removed.

Hypertherm recommends that you install an exhaust ventilation system to remove the oxygen-enriched atmosphere that can collect when oxygen is used as the plasma gas for cutting.

Flashback arrestors are REQUIRED to stop the spread of fire to the supply gases (unless a flashback arrestor is not available for a specific gas or pressure).

As an installer or user, you must supply the exhaust ventilation and flashback arrestors for your cutting system. You can get them from your cutting machine supplier.

⚠ WARNING





HYDROGEN GAS CAN CAUSE AN EXPLOSION OR FIRE

Hydrogen is a flammable gas that can cause an explosion or fire if it is not removed.

Keep flames away from cylinders and hoses that contain hydrogen. Keep flames and sparks away from the torch when using hydrogen as a plasma gas.

Consult your local safety, fire, and building code requirements for the storage and use of hydrogen.

Hypertherm recommends that you install an exhaust ventilation system to remove the hydrogen-enriched atmosphere that can collect when hydrogen is used as the plasma gas for cutting.

Flashback arrestors are REQUIRED to stop the spread of fire to the supply gases (unless a flashback arrestor is not available for a specific gas or pressure).

As an installer or user, you must supply the exhaust ventilation and flashback arrestors for your cutting system. You can get them from your cutting machine supplier.

- Make sure to obey all applicable codes and regulations for supply gas plumbing:
  - All installer or user-supplied equipment must obey applicable national and local codes for supply gases and supply gas plumbing. Speak with a licensed plumber for more information about the codes in your location.
  - Any installation, modification, or repair of supply-gas equipment or plumbing systems must be done by a licensed plumber.
- You can use flexible hoses that are designed to carry the appropriate gas and are rated for the correct pressure. Other hoses can crack and leak.
- For the best results, use the recommended torque specifications for plumbing and hose fittings in the Torque specifications for gas or water plumbing and hose connections on page 57.
- You can use rigid copper pipes.
- Do not use steel or aluminum.

Supply-gas hoses are available from Hypertherm. Refer to Cable, hose, and lead parts on page 436. All installer or user-supplied equipment must obey applicable national and local codes for supply gas and supply gas plumbing. Speak with a licensed plumber for more information about the codes in your location.

Hypertherm recommends an internal diameter of at least 10 mm (0.375 inch) for supply-gas hoses that are 76 m (250 feet) or less.

Table 12 - Recommended dimensions for gas fittings

Fitting type	Dimensions
N_2 / Ar	5/8 inch – 18, RH internal (inert gas) "B"
Air	9/16 inch – 18, JIC #6
F5 / H_2	9/16 inch – 18, LH (fuel gas) "B"
O_2	9/16 inch – 18, RH (oxygen)

The location of regulators and the number of elbow fittings can have an effect on inlet pressure. If the inlet pressure for your cutting system is not within recommended specifications, speak with your cutting machine supplier or regional Hypertherm Technical Service team.

NOTICE

PTFE TAPE CAN CAUSE CLOGGED VALVES, REGULATORS, AND TORCHES

Never use PTFE tape on any joint preparation. Use only a liquid or paste thread sealant on male thread ends.

NOTICE

INCORRECT SUPPLY-GAS CONNECTIONS CAN CAUSE CUTTING SYSTEM DAMAGE

Incorrect connections can reduce the life of consumables and cause damage to the torch head, torch receptacle, torch leads, and torch connect console.

NEVER connect a supply gas to a hose, connection, or fitting that is not designed for that gas type or pressure.

NOTICE

INCORRECT HOSES, CONNECTIONS, OR FITTINGS CAN CAUSE DAMAGE AND BAD PERFORMANCE

Noncompliant hoses, hose connections, or hose fittings can crack or leak. Incorrect fittings can cause malfunctions with the internal valves because contaminants can enter the valves through damaged or loose fittings.

All hoses, hose connections, and hose fittings used for supply-gas plumbing must be designed for use with the appropriate gas and pressure rating. NEVER connect a supply gas to a hose, connection, or fitting that is not designed for that gas type or pressure. A replacement hose, connection, or fitting must meet all applicable regulations and codes.

NOTICE

DIRTY, OILY AIR CAN CAUSE DAMAGE TO THE AIR FILTER BOWL

Some air compressors use synthetic lubricants that contain esters. Esters can cause damage to the polycarbonates in the air filter bowl.

Add more gas filtration if necessary.

Regulator requirements for supply gases

NOTICE

LOW-QUALITY REGULATORS CAN REDUCE PERFORMANCE AND CUT QUALITY

Low-quality gas regulators do not provide consistent supply-gas pressure. They can reduce system performance and decrease cut quality.

Do not use low-quality gas regulators.

NOTICE

DIRTY, OILY AIR CAN CAUSE DAMAGE TO THE AIR FILTER BOWL

Some air compressors use synthetic lubricants that contain esters. Esters can cause damage to the polycarbonates in the air filter bowl.

Add more gas filtration if necessary.

It is important to choose the correct gas regulator, or regulators, for the conditions at the installation site. A gas regulator must be compatible with the gases used and appropriate for the environmental conditions. For example, certain regulators are recommended for specific temperature ranges. The type of gas (cylinder gas, line gas, or liquefied gas), and the gas-delivery pressure and flow, can also influence regulator selection.

Single-stage gas regulation:

- Reduces source gas pressure to the necessary delivery pressure in one step.
- Is not subject to tightly controlled delivery pressure.
- Is a good choice for generic applications and where fluctuations in source gas pressure are small.

Dual-stage gas regulations:

- Reduce source gas pressure to the necessary delivery pressure in two steps. Dual-stage regulation uses two single-stage regulators. The first regulator reduces the pressure to approximately three times the maximum delivery pressure. The second regulator reduces pressure to the necessary delivery pressure.
- Are a good choice for applications that require consistent delivery pressure and where fluctuations in source gas pressure are large.

Your gas supplier can recommend the best gas regulator, or regulators, for the conditions at your site.



Local regulations and the type of gas that is used can influence the recommended inlet gas fittings for your gas connect console. Refer to the following table.

Table 13 - Recommended dimensions for gas fittings

Fitting type	Dimensions
N_2 / Ar	5/8 inch – 18, RH internal (inert gas) "B"
Air	9/16 inch – 18, JIC #6
F5 / H_2	9/16 inch – 18, LH (fuel gas) "B"
O_2	9/16 inch – 18, RH (oxygen)

Shield-water requirements (VWI and OptiMix)

If you use water as a shield fluid, use the following water pressure requirements, flow requirements, and water-purity guidelines.

If you use water as a shield fluid, the temperature range for cutting system operation and storage decreases to 0°C to 40°C (32°F to 104°F).

Table 14 - Quality, pressure, and flow requirements for shield water

Quality [1]	Minimum and maximum pressure	Flow rate required
Deionized water is **not** recommended to use as shield water. Deionized water will react with the copper components in the system and result in decreased life of components and consumables. Hypertherm recommends that you contact a water-quality expert for guidance.	2.76 bar (40 psi) minimum 8.27 bar (120 psi) maximum	35 L/h (9.4 U.S. gal/h)

1 Water that does not meet minimum purity specifications can cause unwanted deposits on the torch nozzle and shield. These deposits can alter the water flow and produce an unstable arc.

Table 15 - Purity requirements for shield water

Particulate type	Purity requirement
Total Dissolved Solids (TDS)	< 61 PPM
Calcium + magnesium	< 40 PPM
Silica	< 5 PPM
pH	6.5 - 8.0

A TDS meter identifies the concentration of dissolved ionized solids (such as salts and minerals) and their increase in electrical conductivity

of a solution. A TDS meter is available from Hypertherm (Hypertherm Waterjet part number 1-13897).

Plumbing and hose requirements for shield water

- You can use flexible hoses that are designed to carry water.
- For the best results, use the recommended torque specifications for plumbing and hose fittings.
- You can use rigid copper pipes.
- Do not use steel or aluminum pipes.

Install the plumbing and hoses consistent with all national and local codes. After installation, pressurize the entire system and test it for leaks.

To decrease the risk of leaks in the cutting system, make sure to tighten all connections to the recommended torque specifications in Torque specifications for gas or water plumbing and hose connections on page 57.



Hoses are available from Hypertherm. Refer to Water (optional shield fluid) hoses (blue) on page 448.

Additional regulator requirement for shield water when pressure is high

Water pressure regulators are built into the VWI and OptiMix gas connect consoles.

Additional water pressure regulators are necessary only when the shield-water pressure is more than 7.92 bar (115 psi).

Remove shield water from the gas connect console

If your plasma cutting system uses shield water and is stored in ambient temperatures at or below 0°C (32°F), Hypertherm recommends that you use these steps to remove shield water. These steps are for cutting systems that have a VWI or OptiMix gas connect consoles.

1. Remove the shield water supply line to the gas connect console.
2. Access a source of compressed air that is clean and dry.
3. Use a regulator to adjust the compressed air to 5.52 bar (80 psi).
4. Connect the compressed air hose to the water inlet on the gas connect console.



The air hose needs to adapt to a JIC 6 male fitting on the gas connect console.

5. Use the XPR web interface or CNC to select a process ID for a water process (such as 2028).
6. Select **Preflow** from the **Plasma Process Selection** menu.

   During preflow, water mist will exit the torch nozzle for approximately 45 - 50 seconds.

7. Repeat the previous step until shield water mist is no longer visible exiting the torch nozzle.

   It can take 7 - 10 preflow cycles for the shield water mist to stop.

Torque specifications for gas or water plumbing and hose connections

For the best results, use the recommended torque specifications for plumbing and hose fittings.

Table 16 - Torque specifications

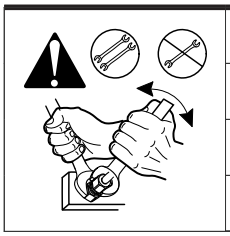

Gas or water hose dimensions	N·m	lbf·in	lbf·ft
10 mm (3/8 inch) or less	8.5 – 9.5	75 – 84	6.25 – 7
12 mm (1/2 inch)	16.3 – 19.0	144 – 168	12 – 14
25 mm (1 inch)	54.2 – 88.1	480 – 780	40 – 65

Coolant requirements

Add the correct type and amount of coolant before you operate the plasma cutting system.

The cutting system ships **without** coolant in the reservoir. Before you operate the cutting system, you must fill it with coolant.

The coolant capacity for the plasma cutting system is between 22.7 liters – 45.4 liters (6 U.S. gallons – 12 U.S. gallons). The coolant reservoir can contain a maximum of 15.1 liters (4 U.S. gallons). But when the plasma cutting system is fully installed, it can contain between 22.7 liters – 45.4 liters (6 U.S. gallons – 12 U.S. gallons).

Lead length has an effect on the total coolant volume needed. A cutting system with long leads needs more coolant than a cutting system with short leads.

Before you fill the coolant reservoir, choose the best coolant for your operating conditions. The ambient temperature range where your cutting system operates affects the coolant that you choose.

NOTICE

LOW COOLANT LEVELS CAN DAMAGE THE CUTTING SYSTEM AND COOLANT PUMP

There is a risk of serious damage to the cutting system and to the coolant pump if you operate the cutting system with no coolant or with low coolant. If your coolant pump is damaged, pump replacement can be necessary.

Never operate the cutting system if you get a low coolant level notice.

NOTICE

AUTOMOTIVE ANTIFREEZE CAN CAUSE DAMAGE TO THE TORCH COOLANT SYSTEM

Antifreeze contains chemicals that can cause damage to the torch coolant system.

Never use automotive antifreeze as an alternative to Hypertherm coolant.

Make sure to read and follow the warning and cautions below. Refer to the Safety Data Sheets (SDS) for safety data and information about how to handle and store coolant, propylene glycol, and benzotriazole. You can find the SDS online. Technical documentation is available at www.hypertherm.com/docs.

⚠ WARNING



COOLANT CAN BE IRRITATING TO SKIN AND EYES AND HARMFUL OR FATAL IF SWALLOWED

Propylene glycol and benzotriazole are irritating to skin and eyes, and harmful or fatal if swallowed.

When you come into contact, flush skin or eyes with water. If swallowed, seek immediate medical attention.

Coolant requirements for operation between -10°C – 40°C (14°F – 104°F)

Use the Hypertherm premixed coolant for the usual operating temperature range for plasma cutting systems. Adjust the coolant mix to operate the system at temperatures that are colder than -10°C (14°F).

Use Hypertherm premixed coolant (028872) when operating in a temperature range of -10°C – 40°C (14°F – 104°F).

If you use shield water, the temperature range for cutting system operation and storage is reduced to 0°C – 40°C (32°F – 104°F).

If it is possible for the temperature to go below -10°C (14°F) when the cutting system is not in use, adjust coolant propylene glycol concentration to 50% to prevent damage to cooling system components.

Operating your plasma cutting system below -10°C (14°F) is not recommended due to reduced consumable life and performance.

To increase the coolant propylene glycol percentage, add 100% propylene glycol (028873) to the premixed Hypertherm coolant (028872) according to the following calculation. The maximum percentage of propylene glycol should never exceed 50%. Also refer to Make an estimate of the total coolant volume on page 277.

Table 17 - Calculate the correct quantity of propylene glycol

Total system coolant volume (in liters)	X	0.4	=	Total volume in liters of 100% propylene glycol to add
Total system coolant volume (in U.S. gallons)	X	0.4	=	Total volume in U.S. gallons of 100% propylene glycol to add

Coolant requirements for operation in temperatures above 40°C (104°F)

Use the correct treated water mixture as coolant when you operate the cutting system at temperatures that stay higher than 40°C (104°F).

For operating temperatures more than 40°C (104°F) and that can never go at or below 0°C (32°F) use treated water with no propylene glycol as coolant.

For operation in very warm temperatures, treated water provides the best cooling properties.

Treated water is a mixture of purified water that meets the Purity requirements for coolant water on page 60 and 1 part benzotriazole (128020) to 300 parts of water. Benzotriazole acts as a corrosion inhibitor for the copper components inside of the cutting system.

Flow requirements for coolant

The correct coolant flow rate is necessary for cutting system operation. If the flow rate is too low or too high, the system will stop automatically to prevent damage.

- The maximum coolant flow rate is 11.36 liters per minute (3.0 US gallons per minute).
- The minimum coolant flow rate is 3.79 liters per minute (1 U.S. gallon per minute).

The cutting system stops automatically if the flow rate reaches the maximum or minimum flow rate. Automatic, low-flow shut-off protects the coolant pump from damage from low-flow or no-flow conditions. Automatic, high-flow shut-off protects the torch and leads from damage from a blow-out event.

For information about how to diagnose and troubleshoot coolant flow issues, refer to:

- Troubleshooting for low coolant flow on page 335
- Troubleshooting for high coolant flow on page 337

Purity requirements for coolant water

Always use water that meets the specifications in the following table when using a custom coolant mix.

Water that is too pure can also cause problems. Deionized water can cause corrosion in the coolant system. After deionization, add benzotriazole (128020).

Use water purified by any method, such as deionization, reverse osmosis, sand filters, or water softeners, as long as the water purity meets the specifications in the following table. Speak with a water specialist for advice in choosing a water filtration system.

Table 18 - Purity measurement methods for coolant water

Water purity level	Conductivity µS/cm at 25°C (77°F)	Resistivity mΩ·cm at 25°C (77°F)	Dissolved solids or hardness (ppm of NaCl)	Grains per gallon (gpg of $CaCO_2$)
Pure water (For reference only. Do not use.)	0.055	18.3	0	0
Maximum purity	0.5	2	0.206	0.010
Minimum purity	18	0.054	8.5	0.43
Maximum potable water (For reference only. Do not use.)	1,000	0.001	495	25

Requirements to put system components in position

When planning where to put the plasma power supply, gas connect console, TorchConnect console, and torch, consider the following limitations and requirements:

- Worksite requirements for system components on page 65
- Length requirements for hoses, cables, and leads on page 66
- Bend-radius requirements for hoses, cables, and leads on page 67
- Distance requirements between high-frequency cables and control cables on page 68
- Distance requirements for ventilation and access on page 68
- Distance requirements for communications on page 69

Configuration requirements for the Core gas connect console

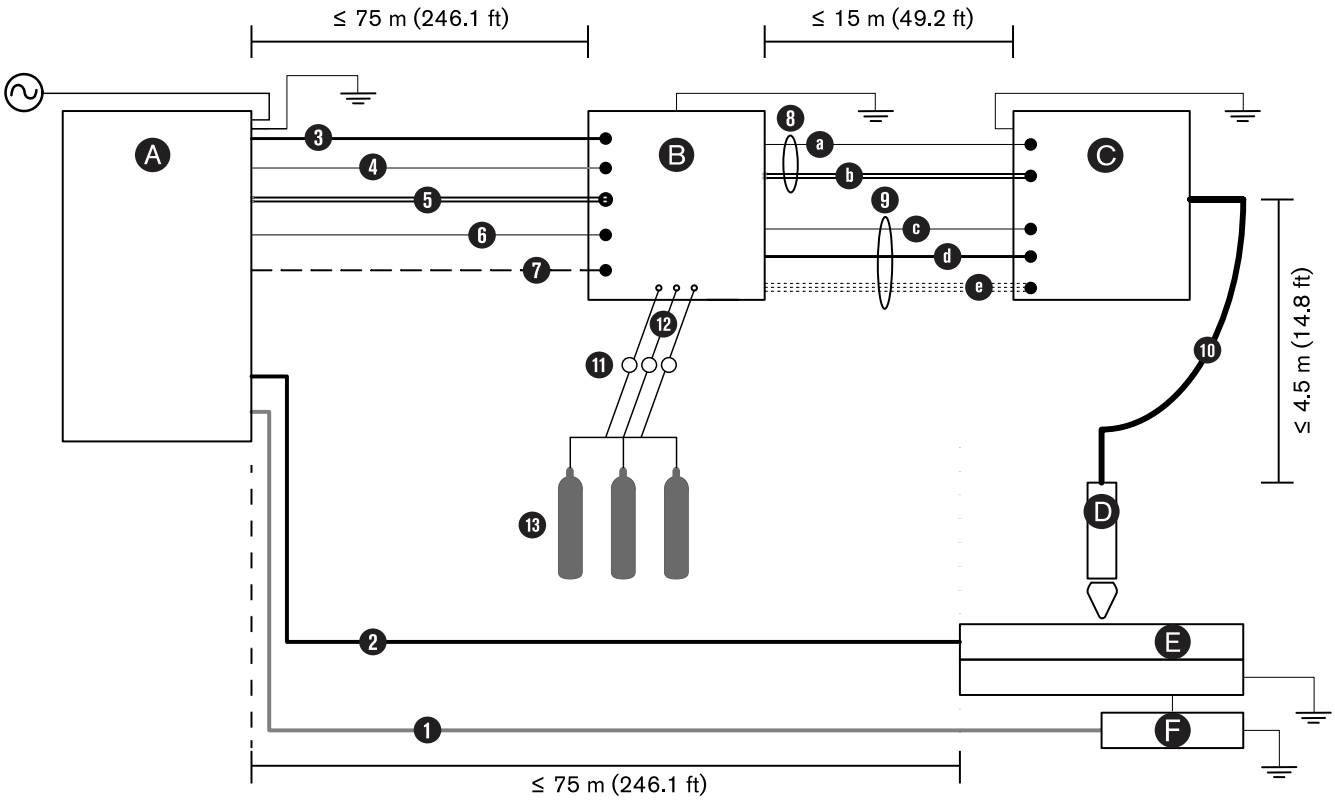

A Plasma power supply

B Gas connect console (Core)

C TorchConnect console

D Torch

E Cutting table

F CNC

1 CNC lead

2 Work cables

3 Controller Area Network (CAN) cable

4 Power cable: 120 VAC

5 Coolant hoses: 1 supply, 1 return

6 Pilot-arc cable

7 Negative cable

8 Pilot-arc cable and coolant-hose assembly

8a Pilot-arc cable

8b Coolant hoses: 1 supply, 1 return

9 Power cable, CAN, 3-gas hose assembly

9c Power cable: 120 VAC

9d CAN cable

9e 3 gas hoses (Core)

10 Torch lead

11 Regulators – Position a gas regulator within three meters (10 feet) of the gas connect console or adjust inlet gas pressures to tolerances specified in the process gas requirements.

12 Hoses for supply gases

13 Gases Core: O_2, N_2, and air

Configuration requirements for the CorePlus gas connect console

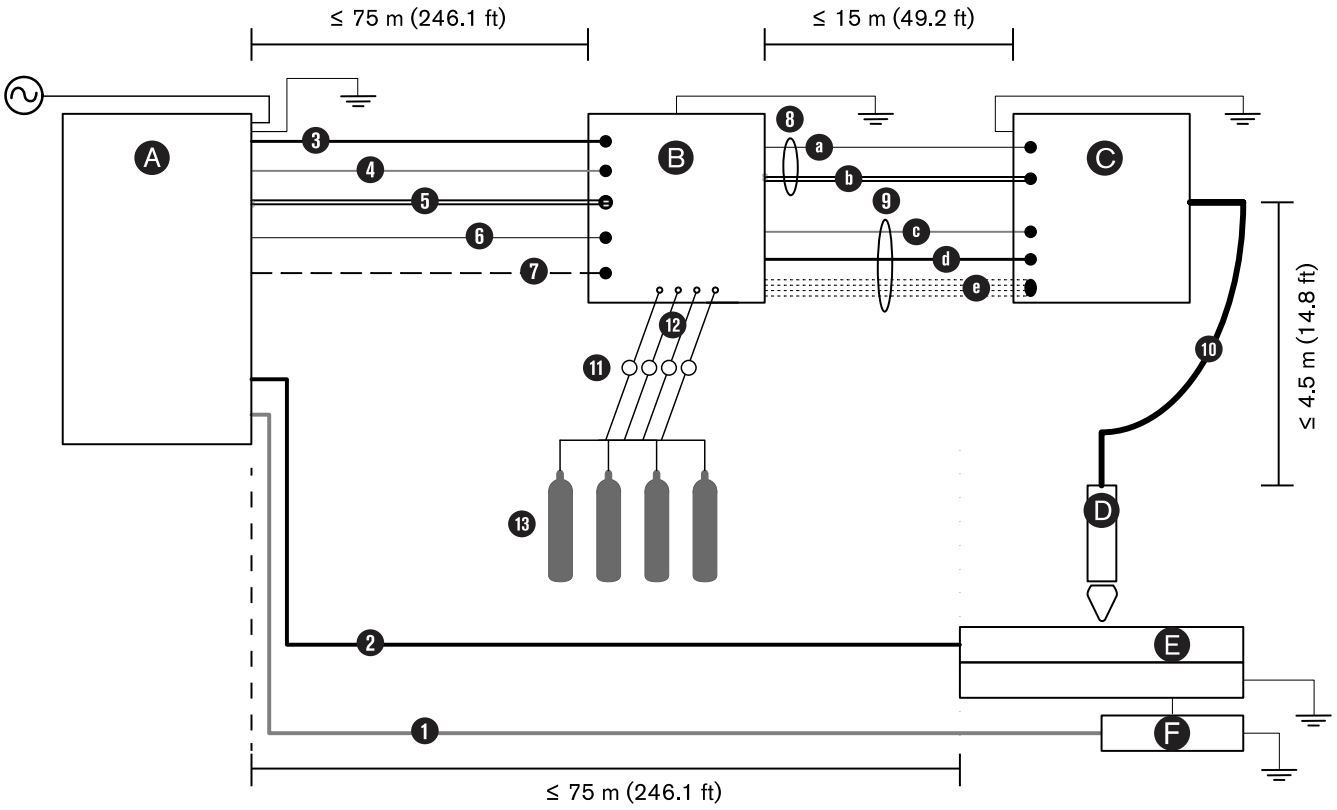

A Plasma power supply

B Gas connect console (CorePlus)

C TorchConnect console

D Torch

E Cutting table

F CNC

1 CNC lead

2 Work cable

3 Controller area network (CNC) cable

4 Power cable: 120 VAC

5 Coolant hoses: 1 supply, 1 return

6 Pilot-arc cable

7 Negative cable

8 Pilot-arc and coolant hose assembly

8a Pilot-arc cable

8b Coolant hoses: 1 supply, 1 return

9 Power cable, CAN, 4-gas hose assembly

9c Power cable: 120 VAC

9d CAN cable

9e 4 gas hoses (CorePlus)

10 Torch lead

11 Regulators – Position a gas regulator within three meters (10 feet) of the gas connect console or adjust inlet gas pressures to tolerances specified in the process gas requirements.

12 Hoses for supply gases

13 Gases CorePlus: O_2, N_2, Ar, and air

Configuration requirements for the VWI or OptiMix gas connect consoles

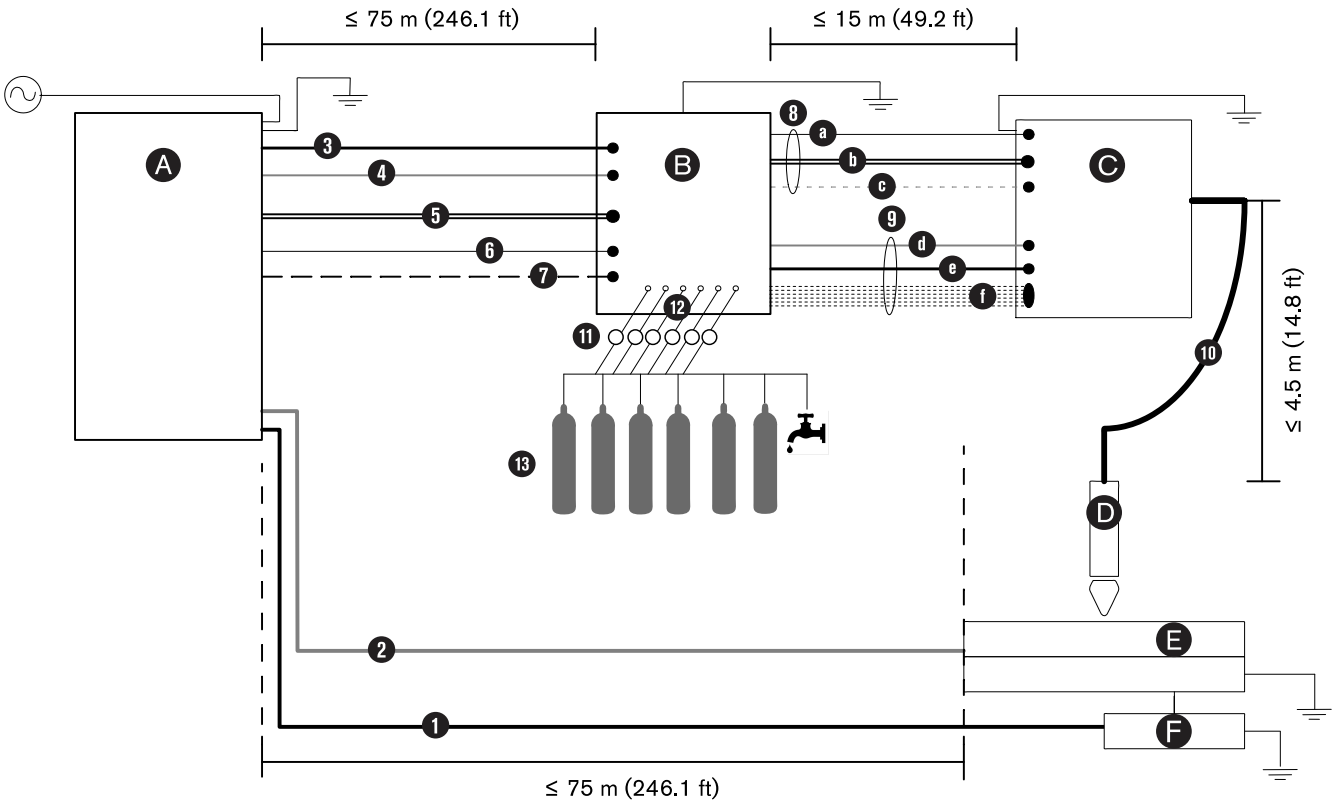

A Plasma power supply

B Gas connect console (VWI or OptiMix)

C Torch connect console

D Torch

E Cutting table

F CNC

1 CNC lead

2 Work cable

3 CAN cable

4 Power cable: 120 VAC

5 Coolant hoses: 1 supply, 1 return

6 Pilot-arc cable

7 Negative cable

8 Pilot-arc, coolant-hose, shield-water assembly

8a Pilot-arc cable

8b Coolant hoses: 1 supply, 1 return

8c Shield-water hose (VWI or OptiMix)

9 Power cable, CAN, 5-gas hose assembly

9d Power cable (120 VAC)

9e CAN cable

9f 5 gas hoses (VWI or OptiMix)

10 Torch lead

11 Regulators – Position a gas regulator within three meters (10 feet) of the gas connect console or adjust inlet gas pressures to tolerances specified in the process gas requirements.

12 Hoses for supply gases

13 Gases and water

VWI: O_2, air, N_2, Ar, F5, and water

OptiMix: O_2, air, N_2, Ar, F5, water, H_2

Worksite requirements for system components

Use the following recommendations to put the plasma power supply in the optimal position:

- Level surface (less than 10° incline)
- Clean and dry area
- Able to support at least 680 kg (1,500 lb)
- With a minimum distance of 1 meter (3.3 feet) between the plasma power supply and other system components, or between the plasma power supply and an obstacle.

Use the following recommendations to put the gas connect console in the best position:

- Level surface (less than 10° incline)

- Clean and dry area
- Able to support the weight of your gas connect console. Refer to Gas connect console specifications on page 32.

Use the following recommendations to put the TorchConnect console in the best position:

- Clean and dry area
- Able to support at least 9.3 kg (20.5 lb)



These recommendations for the gas connect console and the TorchConnect console are also applicable for mezzanine locations.

Length requirements for hoses, cables, and leads

Use the correct lengths for all hoses, cables, and leads.

The distances between the plasma power supply, gas connect console, TorchConnect console, torch, and cutting table are limited by the lengths of the interconnect hoses, cables, and leads that connect them.

Table 19 - Length ranges for interconnect hoses, cables, and leads

From this component...	to this component...	...the length can range from:
Plasma power supply	Gas connect console (all models)	3 m (9.8 ft) – 75 m (246.1 ft)
Gas connect console	TorchConnect console	3 m (9.8 ft) – 15 m (49.2 ft)
TorchConnect console	Torch or cutting table	2 m (6.6 ft) – 4.5 m (14.8 ft)

For visual distance requirements, refer to:

- Configuration requirements for the Core gas connect console on page 61
- Configuration requirements for the CorePlus gas connect console on page 62
- Configuration requirements for the VWI or OptiMix gas connect consoles on page 64

Hoses, cables, and leads for plasma equipment are available from Hypertherm. Make sure to install hoses, cables, and leads that are the correct length:

- Hoses, cables, or leads that are too short can cause restriction of mechanical movement.
- Cables and leads that are too long can cause Electromagnetic Interference (EMI).



EMI can have a bad effect on cut quality.

Contact your cutting machine supplier for recommendations about the best lead lengths for your cutting system.

Bend-radius requirements for hoses, cables, and leads

Do not bend hoses, cables, and leads more than the minimum bend radius for each component.

The following hoses, cables, and leads cannot bend beyond a minimum bend radius of 152.50 mm (6 in.):

- Torch lead
- Pilot arc cable
- Coolant-hose assembly
- Power cable
- CAN cable
- 3-gas hose assembly for the Core gas connect console
- 4-gas hose assembly for the CorePlus gas connect console
- 5-gas hose assembly for the VWI or OptiMix gas connect console
- Gas supply hoses
- Bevel torch lead
- Negative cable

Figure 5 - Minimum bend radius (measured inside diameter)

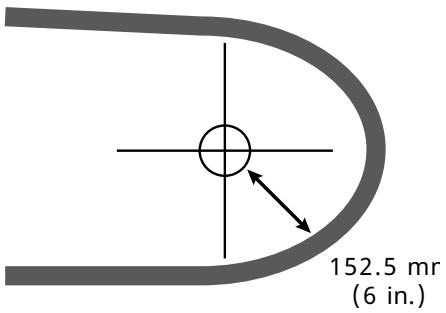

Correct sizes for connectors on hoses, cables, and leads

Make sure to use connectors that are the correct size on hoses, cables, and leads that connect from one console to another.

The connectors for the console-to-console lead and hose assemblies have the following maximum diameters:

- 56 mm (2.2 in.) for the pilot-arc cable and coolant-hose assembly
- 58 mm (2.3 in.) for the power cable, CAN cable, and gas-hose assembly

The following images show OptiMix assemblies as examples. The connectors on all console-to-console assemblies (Core, CorePlus, VWI, and OptiMix) have the same diameter.

Figure 6 - Example OptiMix pilot-arc cable and coolant-hose assembly

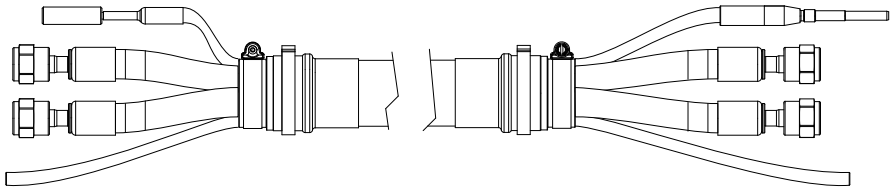

Figure 7 - Example OptiMix gas-hose assembly

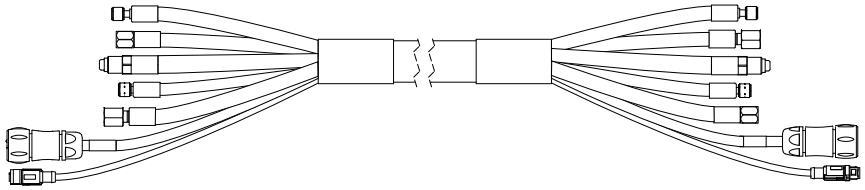

The 18 meter (59.1 feet) assembly is compatible only with the 2 meter (6.6 feet) or 2.5 meter (8.2 feet) torch lead. For lengths, refer to Cable, hose, and lead parts on page 436.

Distance requirements between high-frequency cables and control cables

To prevent noise issues, do not put high-frequency cables and control cables too near each other.

EMI can occur if high-frequency cables (such as the pilot-arc and negative cables) are too close to control cables (such as the 120 VAC power, CAN, and EtherCAT cables).

If possible, use a separate track to isolate each cable.

If separate tracks are not possible, Hypertherm recommends a minimum separation distance 150 mm (6 inches) between the high-frequency cables and control cables. Separate the pilot-arc and negative cables, or any power cables that have a voltage more than 120 VAC from the following:

- CAN cable
- Power cable (120 VAC)
- CNC lead (EtherCAT, Ethernet LAN, serial RS-422, or discrete lead)

Distance requirements for ventilation and access

Make sure that all system components have sufficient open space around them for ventilation and service access.

Requirements for ventilation

- Do not block the ventilation louvers on the corners or bottom panels of the front and back of the plasma power supply. A separation distance of least 1 m (3.3 feet) is required for ventilation.
- Do not block the ventilation louvers on the gas connect console. A separation distance of least 1.27 cm (0.50 inch) is required for ventilation.
- Do not block the ventilation louvers on the torch connect console. You must use the mounting brackets to allow space between the console and mounting surface.

Requirements for service and maintenance access

Hypertherm recommends a minimum distance of 1 meter (3.3 feet) between the plasma power supply and other system components, or between the plasma power supply and an obstacle.

Distance requirements for communications

Make sure that you keep the plasma power supply no more than a specified maximum distance from each controlling communication device.

Table 20 - Maximum distance between the plasma power supply and controller

Communication type	Distance
Wireless	Unobstructed maximum radius of 30.5 m (100 ft) [1]
EtherCAT [2]	Maximum 75 m (246.1 ft)
Discrete [2]	Maximum 75 m (246.1 ft)
Serial RS-422 [2]	Maximum 75 m (246.1 ft)
Ethernet LAN [2]	Maximum 75 m (246.1 ft)

1 Obstructions or distances greater than 30.5 meters (100 feet) can have an effect on communication between the plasma power supply and wireless device.

2 Refer to Configuration requirements for the Core gas connect console on page 61, Configuration requirements for the CorePlus gas connect console on page 62, and Configuration requirements for the VWI or OptiMix gas connect consoles on page 64 for visual distance requirements.

Wireless compliance

The plasma cutting system has integrated wireless devices that have certification for use in specified countries.

Wireless devices use radio frequencies that may be regulated, but regulations differ from country to country. Wireless devices that conform to IEEE standards 802.11a, 802.11b, 802.11g, 802.11n, 802.16e, and others, are designed for, or certified for use in, specific countries. Certificates of Radio Frequency (RF) Compliance from wireless device manufacturers for wireless devices integrated into Hypertherm products can be found at www.hypertherm.com/docs.

The user of Hypertherm products that have integrated wireless devices is responsible for making sure that each wireless device has been certified for the country of use and configured with the correct selection of frequency and channel for the country of use. Wireless devices that are integrated into Hypertherm products are not allowed to be operated in countries where regulations for wireless device certification have not been satisfied. Any wireless device or antennae modification or deviation from the permissible configuration, markings, power, frequency settings, and other local regulations on radio frequency wireless device for the country of use can be an infringement of national law.

Refer to the *XPR Wireless Compliance Manual (10085315)* for more information.

Torch mounting bracket requirements

Make sure to use a torch mounting bracket that obeys the requirements for XPR torches.

You must supply the torch mounting bracket for your cutting system. Choose one that does the following:

- Holds a torch diameter that is 57.15 mm (2.25 inches)
- Holds the torch perpendicular (at a 90° angle) to the workpiece (for non-bevel cutting)
- Does not interfere with the torch lifter



The XPR torch mounting sleeve is larger than the torch mounting sleeve for HPR® torches. Modification or replacement of previous mounting hardware is necessary for XPR torches.

Mounting brackets are available from Hypertherm. Refer to Torch bracket on page 430.

Torch lifter requirements

Use a torch lifter that has the correct weight capacity for XPR torches.

Choose a lifter that has a weight capacity of at least 11.3 kg (25 lb). This includes the weight of a torch rotational sleeve, if used. Refer to your torch lifter instruction manual for more information.

CNC requirements for plasma cutting systems

There are specific CNC features that are necessary for integration with plasma cutting systems.

Remote on-off switch

The CNC must have a remote on-off switch. Refer to Install a remote on-off switch on page 209.

A feature of the control PCB is that it offers redundancy to one remote on-off switch.

A 24 VDC (500mA) and return (GND) from the CNC or controlling device to the expansion PCB are necessary for redundant remote on-off for the expansion PCB and input to the control PCB. Make sure to use a separate discrete cable between the redundant remote on-off input and main control PCB.



For information about how to do this, refer to Install a redundant remote on-off switch on page 215.

Adjustable settings

The CNC must allow the adjustment of the following settings:

- Current setpoint
- Plasma cutflow
- Shield cutflow
- Gas mixing setpoints

Display settings

The CNC must show the following data:

- Plasma-gas type
- Shield-gas type
- Process-ID selection
- System-diagnostic codes
- Firmware version based on console type

The CNC must show the following data in real time to troubleshoot and diagnose system operation:

- Chopper current
- Work-cable current
- System-status codes
- Chopper temperature

- Transformer temperature
- Coolant temperature
- Coolant flow
- Process-gas pressures
- Fan speeds

Diagnostics and troubleshooting

The CNC must be able to run the following commands to diagnose and troubleshoot system operation:

- Test preflow gases
- Test pierceflow gases
- Test cutflow gases
- Test for gas system leaks

For more information about CNC commands, refer to the *CNC Communication Protocol for the XPR Cutting System (809810)*.

Recommended grounding and shielding

It is important to use grounding and shielding best practices when you set up a plasma cutting system. This can minimize problems related to EMI, or electrical noise.

This documentation describes practices for grounding and shielding a plasma cutting system to minimize its susceptibility to EMI (also known as noise). It also describes the service ground, Protective Earth (PE) ground, and Direct Current (DC) power ground. The diagram at the end of this section shows these types of grounds in a plasma cutting system.

The grounding practices in this documentation have been used on many installations with excellent results, and Hypertherm recommends that these practices be a routine part of the installation process. The actual methods used to implement these practices may vary from system to system, but should remain as consistent as possible. However, due to the variation in equipment and installations, these grounding practices may not succeed in every case to eliminate EMI problems. Hypertherm recommends that you consult your national and local electrical codes to make sure that the grounding and shielding practices that you use comply with the requirements for your location.

Types of grounding

When you set up an XPR cutting system, make sure that you comply with the four types of grounding: service ground, PE ground, DC power ground, and EMI grounding and shielding.

Service ground

Service ground (also known as safety ground) is the grounding system that applies to the incoming line voltage. It prevents a shock hazard to any personnel from any of the equipment or the cutting table. It includes the service ground coming into the plasma cutting system and other systems, such as the CNC and the motor drives, and the supplemental ground rod connected to the cutting table. In the plasma circuits, the ground is carried from the plasma power supply chassis to the chassis of each separate console through the interconnecting cables.

PE ground

PE ground is the grounding system inside the electrical equipment. The PE ground, which connects to the service ground, provides electrical continuity between the equipment and the Alternating Current (AC) service.

DC power ground

DC power ground (also known as cutting current ground or work) is the grounding system that completes the path of the cutting current from the torch back to the plasma cutting system. It requires that the positive cable from the plasma cutting system be firmly connected to the cutting table ground bus with a correctly sized cable. It also requires that the slats, on which the workpiece rests, make firm contact with the table and the workpiece.

EMI grounding and shielding

EMI grounding and shielding is the grounding system that limits the amount of EMI emitted by the plasma cutting system and motor drive system. It also limits the amount of EMI that is received by the CNC and other control and measurement circuits. The grounding practices described in this section mainly target EMI grounding and shielding.

Grounding practices

When you set up an XPR cutting system, make sure that you comply with all best practices for correctly grounding the system.

- Unless noted, for XPR cutting systems, use cables with a minimum gauge of 21.2 mm^2 (4 AWG) (047031) for the EMI ground cables shown in the Example grounding diagram with a plasma cutting system on page 76.

- The cutting table is used for the common, or star, EMI ground point and should have threaded studs welded to the table with a copper bus bar mounted on them. A separate bus bar should be mounted on the gantry as close to each motor as possible. If there are motors at each end of the gantry, run a separate EMI ground cable from the far motor to the gantry bus bar. The gantry bus bar should have a separate, heavy EMI ground cable 21.2 mm^2 (4 AWG; 047031) to the table bus bar. The EMI ground cables for the torch lifter and the Remote High Frequency (RHF) console or combined ignition/gas connect console must each run separately to the table ground bus.
- Inadequate grounding not only exposes operators to dangerous voltages, but inadequate grounding also increases the risk of equipment failure and unnecessary downtime. Ideally a ground should be zero ohms resistance, but field experience indicates under 1 ohm resistance is satisfactory for most applications. Hypertherm recommends that you consult your national and local electrical codes to make sure that the grounding and shielding practices that you use comply with the requirements for your location.
- A ground rod (a PE ground) that meets all applicable national and local electric codes must be installed within 6 m (20 ft) of the cutting table. For XPR cutting systems, the PE ground must be connected to the cutting table ground bus bar using a minimum 21.2 mm^2 (4 AWG) grounding cable (047031). Consult an electrician in your location to make sure that your grounding meets all national and local electric codes.
- For the most effective shielding, use the Hypertherm CNC interface cables for Input/Output (I/O) signals, serial communication signals, between plasma cutting systems in multi-drop connections, and for interconnections between all components of the Hypertherm system.
- All hardware used in the ground system must be brass or copper. While you can use steel studs welded to the cutting table for mounting the ground bus, no other aluminum or steel hardware can be used in the ground system.
- AC power, PE, and service grounds must be connected to all equipment according to national and local codes.
- For a cutting system with a RHF console or combined ignition/gas connect console, the positive, negative, and pilot arc cables should be bundled together for as long a distance as possible. The torch lead, work cable, and the pilot arc (nozzle) cables may be run parallel to other wires or cables only if they are separated by at least 150 mm (6 inches). If possible, run power and signal cables in separate cable tracks.
- For a cutting system with a RHF console or combined ignition/gas connect console, Hypertherm recommends that you mount this console as close as possible to the torch. This console also must have a separate ground cable that connects directly to the cutting table ground bus bar.
- Each Hypertherm component, and any other CNC or motor drive cabinet or enclosure, must have a separate ground cable to the common (star) ground on the table. This includes the ignition/gas connect console, whether it is bolted to the plasma cutting system or to the cutting table.

- For XPR cutting systems, the coupler on the pilot arc and coolant hose assembly must be connected firmly to the gas connect console and TorchConnect console collars. Make sure to tighten the clamp. The collar on the torch lead must be connected firmly to the torch sleeve. Make sure to tighten the clamp. Connect a ground cable (10 AWG) to the flat terminal on the torch mounting sleeve.
- The torch holder and the torch breakaway mechanism – the part mounted to the lifter, not the part mounted to the torch – must be connected to the stationary part of the lifter with copper braid at least 12.7 mm (0.5 inches) wide. A separate cable must run from the lifter to the gantry ground bus bar. The valve assembly should also have a separate ground connection to the gantry ground bus bar.
- If the gantry runs on rails that are not welded to the table, then each rail must be connected with a ground cable from the end of the rail to the table. The rail ground cables connect directly to the table and do not need to connect to the table ground bus bar.
- If you are installing a voltage divider PCB, mount it as closely as possible to where the arc voltage is sampled. One recommended location is inside the plasma power supply enclosure. If a Hypertherm voltage divider PCB is used, the output signal is isolated from all other circuits. The processed signal should be run in twisted shielded cable (Belden® 1800F or equivalent). Use a cable with a braided shield, not a foil shield. Connect the shield to the chassis of the plasma cutting system and leave it unconnected at the other end.
- All other signals (analog, digital, serial, and encoder) should run in twisted pairs inside a shielded cable. Connectors on these cables should have a metal housing. The shield, not the drain, should be connected to the metal housing of the connector at each end of the cable. Never run the shield or the drain through the connector on any of the pins.

Figure 8 - Plasma cutting system components connected to a cutting table ground bus

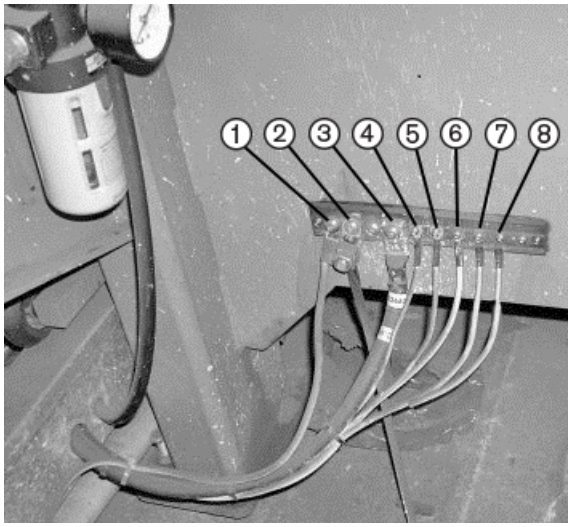

1 Gantry ground bus

2 Ground rod

Figure 8 - Plasma cutting system components connected to a cutting table ground bus (continued)

3 Plasma cutting system work cable (+)

4 Gas connect console

5 CNC enclosure

6 Torch holder

7 Plasma cutting system chassis

8 TorchConnect console

Cooler, if applicable (not shown)

The following picture shows an example of a gantry ground bus. It is bolted to the gantry, close to the motor. All of the individual ground cables from the components mounted on the gantry connect to the bus. A single heavy cable then connects the gantry ground bus to the table ground bus.

Figure 9 - Gantry ground bus example

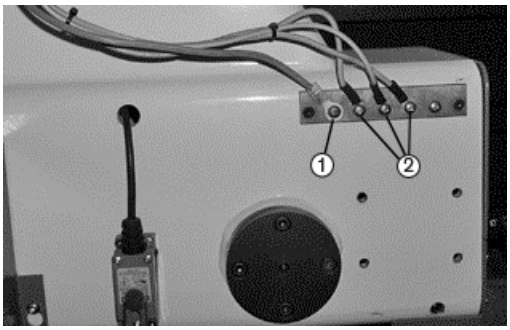

1 Cable to the cutting table ground bus

2 Ground cables from components on the gantry

Example grounding diagram with a plasma cutting system

Figure 10 - Example grounding diagram with a plasma cutting system

Figure 10 - Example grounding diagram with a plasma cutting system (continued)

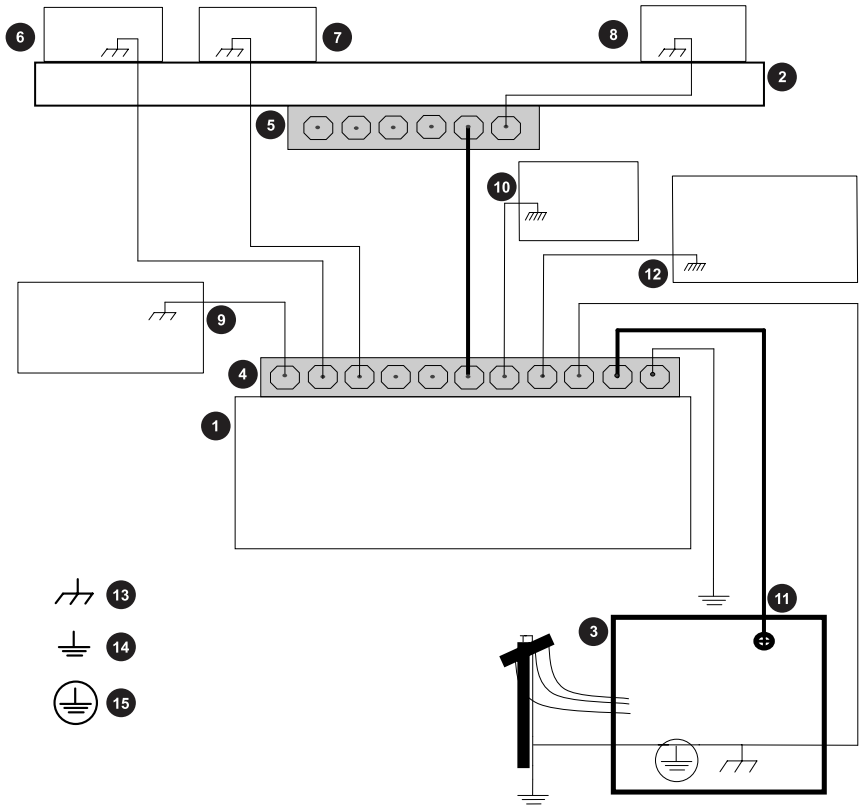

1 Cutting table

2 Gantry

3 Plasma system

4 Table ground bus bar

5 Gantry ground bus bar

6 Torch height control lifter

7 TorchConnect console

8 CNC

9 Torch height control module

10 Gas connect console. Connect to table ground bus bar. [1]

11 DC power ground (work)

12 Cooler, if applicable

13 Chassis and EMI ground

14 Service ground

Figure 10 - Example grounding diagram with a plasma cutting system (continued)

15 PE ground

1 The ignition console is integrated into the gas connect console for XPR cutting systems.

This example is based on practices in North America. Other regions can have different national or local electrical codes. Hypertherm recommends that you consult your national and local electrical codes to make sure that the grounding and shielding practices that you use comply with the requirements for your location.

3 Installation

Before you begin installation

Before you begin installation, make sure to:

- Read, understand, and obey all of the safety instructions that are in this manual, the *Safety and Compliance Manual (80669C)*, the *Radio Frequency Warning Manual (80945C)*, and affixed to the cutting system. Failure to follow safety instructions can result in personal injury or equipment damage.
- Get all necessary reference documents. Refer to Document requirements on page 41.
- Understand and obey the following requirements when planning where to put system components:
  - Worksite requirements for system components on page 65
  - Length requirements for hoses, cables, and leads on page 66
  - Bend-radius requirements for hoses, cables, and leads on page 67
  - Distance requirements between high-frequency cables and control cables on page 68
  - Distance requirements for ventilation and access on page 68
  - Distance requirements for communications on page 69
- Understand and obey all applicable national and local codes and system requirements:
  - Electrical codes and requirements on page 44
  - Process-gas requirements for all gas connect consoles on page 48
  - Plumbing requirements for supply gases on page 50 and Regulator requirements for supply gases on page 53
  - Shield-water requirements (VWI and OptiMix) on page 55
  - Recommended grounding and shielding on page 72

This plasma system can make more than the permitted acoustical noise levels as defined by national and local codes. Always put on correct ear protection when cutting or gouging. Any acoustical noise

measurements taken are related to the specific environment in which the system is used. Refer to *Noise can damage hearing* in the *Safety and Compliance Manual (80669C)*.

In addition, you can find an *Acoustical Noise Data Sheet* for your system at www.hypertherm.com/docs. In the search box, enter `data sheet`.

⚠ WARNING

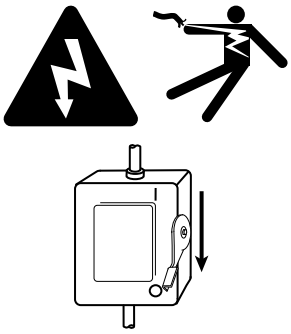

ELECTRIC SHOCK CAN KILL

If the line-disconnect switch is not in the OFF position you can get a serious electric shock. Electric shock can seriously injure or kill you.

The line-disconnect switch must be in the OFF position before you connect the power cord to the cutting system. It must REMAIN in the OFF position until all installation steps are complete. In the United States, use a "lock out/tag out" procedure until installation is complete. In other countries, follow the appropriate national and local safety procedures. Refer to the *Safety and Compliance Manual (80669C)* for more safety information.

⚠ WARNING



ELECTRIC SHOCK CAN KILL

Voltages in the cutting system can cause serious electric shock. Electric shock can seriously injure or kill you.

When the line-disconnect switch is in the ON position, there is line voltage throughout the cutting system. Use extreme caution if you do diagnosis or maintenance tasks when the line-disconnect switch is in the ON position.

⚠ WARNING



ELECTRIC SHOCK CAN KILL

The plasma power supply contains dangerous electric voltages that can seriously injure or kill you. Even if the plasma power supply is turned OFF, you can still get a serious electric shock if the plasma power supply remains connected to an electric power source.

Use extreme caution if you do diagnosis or maintenance tasks when the plasma power supply remains connected to an electric power source and the outer cover or panels are removed. All work that requires removal of the plasma power supply outer cover or panels must be done by a qualified technician. Refer to the *Safety and Compliance Manual (80669C)* for more safety information.

⚠ WARNING

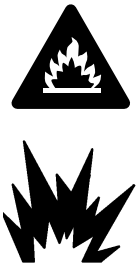

HYDROGEN GAS CAN CAUSE AN EXPLOSION OR FIRE

Hydrogen is a flammable gas that can cause an explosion or fire if it is not removed.

Keep flames away from cylinders and hoses that contain hydrogen. Keep flames and sparks away from the torch when using hydrogen as a plasma gas.

Consult your local safety, fire, and building code requirements for the storage and use of hydrogen.

Hypertherm recommends that you install an exhaust ventilation system to remove the hydrogen-enriched atmosphere that can collect when hydrogen is used as the plasma gas for cutting.

Flashback arrestors are REQUIRED to stop the spread of fire to the supply gases (unless a flashback arrestor is not available for a specific gas or pressure).

As an installer or user, you must supply the exhaust ventilation and flashback arrestors for your cutting system. You can get them from your cutting machine supplier.

⚠ WARNING





OXYGEN GAS CAN CAUSE A FIRE HAZARD

If you use oxygen as the plasma gas for cutting, it can cause a potential fire hazard due to the oxygen-enriched atmosphere that collects. A fire can occur if oxygen is not removed.

Hypertherm recommends that you install an exhaust ventilation system to remove the oxygen-enriched atmosphere that can collect when oxygen is used as the plasma gas for cutting.

Flashback arrestors are REQUIRED to stop the spread of fire to the supply gases (unless a flashback arrestor is not available for a specific gas or pressure).

As an installer or user, you must supply the exhaust ventilation and flashback arrestors for your cutting system. You can get them from your cutting machine supplier.

⚠ WARNING



COOLANT CAN BE IRRITATING TO SKIN AND EYES AND HARMFUL OR FATAL IF SWALLOWED

Propylene glycol and benzotriazole are irritating to skin and eyes, and harmful or fatal if swallowed.

When you come into contact, flush skin or eyes with water. If swallowed, seek immediate medical attention.

NOTICE

AUTOMOTIVE ANTIFREEZE CAN CAUSE DAMAGE TO THE TORCH COOLANT SYSTEM

Antifreeze contains chemicals that can cause damage to the torch coolant system.

Never use automotive antifreeze as an alternative to Hypertherm coolant.

NOTICE

LOW COOLANT LEVELS CAN DAMAGE THE CUTTING SYSTEM AND COOLANT PUMP

There is a risk of serious damage to the cutting system and to the coolant pump if you operate the cutting system with no coolant or with low coolant. If your coolant pump is damaged, pump replacement can be necessary.

Never operate the cutting system if you get a low coolant level notice.

⚠ CAUTION

INCORRECT COOLANT CAN DAMAGE THE CUTTING SYSTEM

Using incorrect coolant can cause damage to the plasma cutting system.

Refer to Coolant requirements on page 57.

NOTICE

PTFE TAPE CAN CAUSE CLOGGED VALVES, REGULATORS, AND TORCHES

Never use PTFE tape on any joint preparation. Use only a liquid or paste thread sealant on male thread ends.

NOTICE

DIRTY, OILY AIR CAN CAUSE DAMAGE TO THE AIR FILTER BOWL

Some air compressors use synthetic lubricants that contain esters. Esters can cause damage to the polycarbonates in the air filter bowl.

Add more gas filtration if necessary.

NOTICE

FOR THE BEST CUT QUALITY AND CONSUMABLE LIFE USE THE CORRECT LEAD LENGTHS

Cut quality and the lifespan of consumables will be decreased if you change the lead lengths.

The manufactured lengths of torch and console leads are critical for system performance. Never change the lengths of leads.

Installation checklist

This checklist summarizes major installation steps. You can use it to record their completion. For full information, refer to Installation steps on page 91.

- ☐ Put the system components in position.
  - ☐ Plasma power supply
  - ☐ Gas connect console
  - ☐ TorchConnect console
  - ☐ Torch

  Refer to Configuration requirements for the Core gas connect console on page 61, Configuration requirements for the CorePlus gas connect console on page 62, or Configuration requirements for the VWI or OptiMix gas connect consoles on page 64.
- ☐ Ground the system components.
  - ☐ Plasma power supply
  - ☐ Gas connect console
  - ☐ TorchConnect console
  - ☐ Torch lead collar
  - ☐ Cutting table
  - ☐ CNC

  Before you connect hoses, cables, and leads, make sure that all system components are correctly and fully grounded. Refer to Recommended grounding and shielding on page 72.
- ☐ Connect all of the hoses, cables, and leads to the plasma power supply.

Refer to Connect the plasma power supply on page 104.

- ☐ Coolant-supply hose and coolant-return hose to the gas connect console
- ☐ Power cable, 120 VAC, to the gas connect console
- ☐ CAN cable to the gas connect console
- ☐ Pilot-arc cable to the gas connect console
- ☐ Negative cable (-) to the gas connect console
- ☐ Work cable to the cutting table

☐ Connect all of the hoses, cables, and leads to the gas connect console.

Refer to Connect the gas connect console on page 109.

- ☐ Coolant-supply hose and coolant-return hose from the plasma power supply
- ☐ Power cable, 120 VAC, from the plasma power supply
- ☐ CAN cable from the plasma power supply
- ☐ Negative cable (-) from the plasma power supply
- ☐ Pilot-arc cable from the plasma power supply

☐ Connect the work cable to the cutting table.

☐ Connect the cable and lead assemblies between the Core or CorePlus gas connect console and TorchConnect console.

Refer to Connect the gas connect console (Core, CorePlus) to the TorchConnect console on page 113.

The number and type of gas hose connections is based on the type of gas connect console you have.

- ☐ Pilot-arc and coolant-hose assembly
- ☐ Power, CAN, and 3-gas assembly
- ☐ Power, CAN, and 4-gas assembly

☐ Connect the cable and lead assemblies between the VWI or OptiMix gas connect console and TorchConnect console.

Refer to Connect the gas connect console (VWI, OptiMix) to the TorchConnect console on page 118.

The number and type of gas hose connections is based on the type of gas connect console you have.

- ☐ Pilot-arc, coolant-hose, and shield-water assembly
- ☐ Power, CAN, and 5-gas assembly

☐ Connect the torch-lead assembly to the torch receptacle.

Refer to Install the torch-lead assembly to the torch receptacle on page 132.

☐ Connect the torch-lead assembly to the TorchConnect.

Refer to Connect the torch lead to the TorchConnect console on page 137.

☐ Make sure that the hoses, cables, and leads are correctly installed.

- ☐ Correct type and correct installation
- ☐ No damage or kinks
- ☐ No coils in cables that can create EMI problems
- ☐ Distances between high-frequency leads and control cables obey requirements
- ☐ Distances for communications obey requirements

☐ Remove the torch and consumable parts.

Refer to Remove the torch and consumable parts on page 139.

☐ Install the torch into the torch receptacle.

Refer to Install the torch in the torch receptacle on page 141.

☐ Install the torch mounting bracket.

- ☐ Install the torch mounting bracket onto the torch lifter.

  As an installer or user, you must supply the motorized torch lifter for your cutting system. Refer to Torch lifter requirements on page 70.

- ☐ Install the torch in the torch mounting bracket on page 143.

  As an installer or user, you must supply the torch mounting bracket for your cutting system. Refer to Torch mounting bracket requirements on page 70.

☐ Install the consumables.

Refer to Install the consumables on page 145.

- ☐ Make sure the consumables are the correct type and correctly installed.

The torch head that comes with the XPR torch assembly kit (428846) has 170 A mild steel consumables pre-installed.

- ☐ Install the torch into the torch receptacle.

  Refer to Install the torch in the torch receptacle on page 141.

- ☐ Connect electric power to the cutting system on page 147.

- ☐ Make sure that the communication method for the CNC interface is installed correctly.

  - ☐ EtherCAT and remote on-off with discrete

    Refer to Connect to the plasma power supply with EtherCAT on page 152.

  - ☐ Wireless (XPR web interface) and discrete

  - ☐ Serial RS-422 and discrete

  - ☐ Ethernet LAN and remote on-off with discrete

    Refer to Connect to the plasma power supply with Ethernet LAN (wired) on page 194

  - ☐ Remote on-off must be wired discretely by the cutting system manufacturer.

    A feature of the control PCB is that it offers redundancy to the standard remote on-off switch. If redundant remote-on off is enabled, the switches for both the standard and redundant remote on-off must be set to ON to supply electric power to the cutting system. Refer to Install a redundant remote on-off switch on page 215.

- ☐ Install the coolant.

  - ☐ Refer to Fill the cutting system with coolant on page 217.

  - ☐ Make sure that the coolant type is correct.

    Refer to Coolant requirements on page 57.

  - ☐ Make sure that the coolant reservoir is full.

System configuration with Core gas connect console

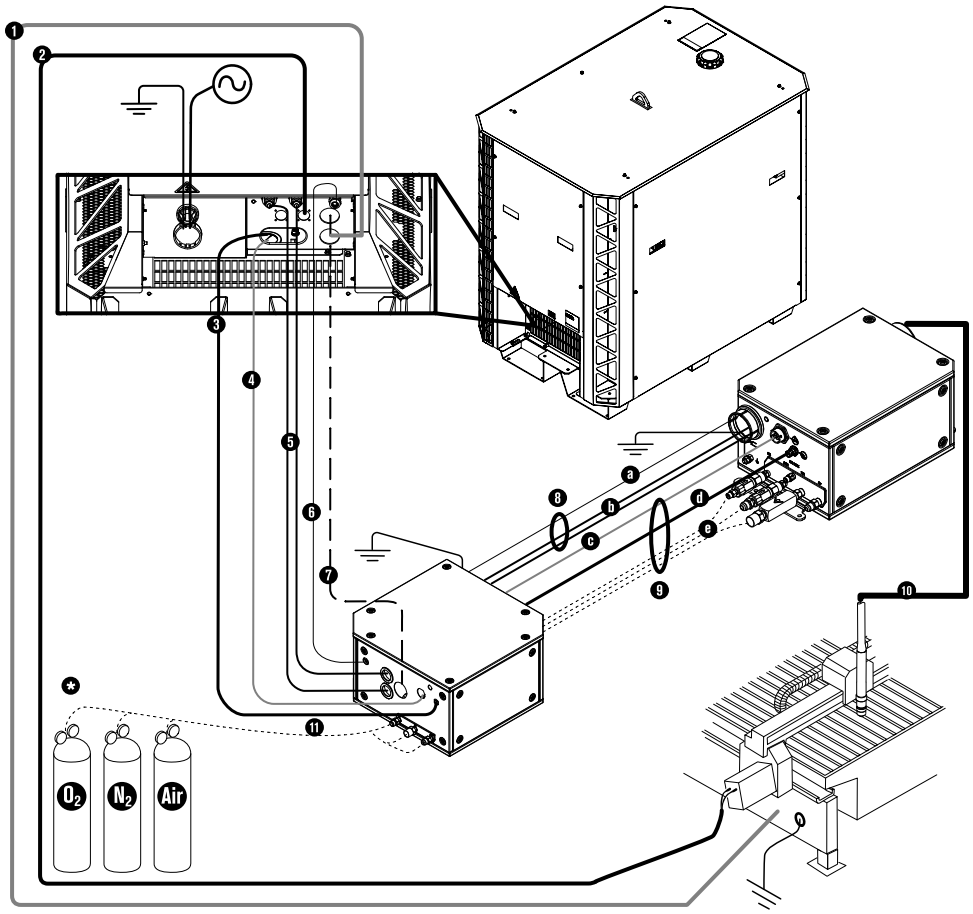

1 Work cable

2 CNC connection cable (EtherCAT shown)

3 CAN cable

4 Power cable, 120 VAC

5 Coolant-supply hose and coolant-return hose

6 Pilot-arc cable

7 Negative cable (2/0 or 4/0)

8 Pilot-arc and coolant assembly

8a Pilot-arc cable

8b Coolant-supply hose and coolant-return hose

9 Power, CAN, 3-gas assembly

9c Power cable, 120 VAC

9d CAN cable

9e Three gas hoses (Core)

10 Torch lead

11 Hoses for supply gases

***** Regulator

Put a gas regulator three meters (10 feet) or less from the gas connect console, or adjust inlet gas pressures to be in the specified process gas tolerances.

System configuration with CorePlus gas connect console

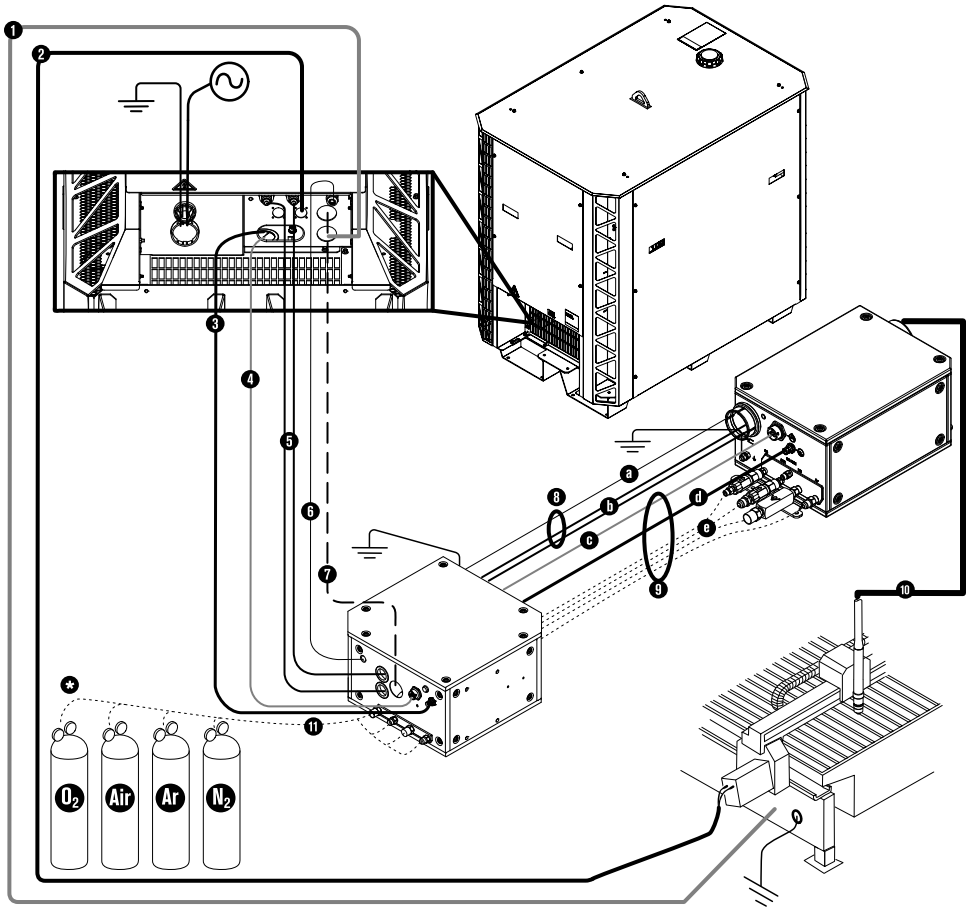

1 Work cable

2 CNC connection cable (EtherCAT shown)

3 CAN cable

4 Power cable, 120 VAC

5 Coolant-supply hose and coolant-return hose

6 Pilot-arc cable

7 Negative cable (2/0 or 4/0)

8 Pilot-arc and coolant assembly

8a Pilot-arc cable

8b Coolant-supply hose and coolant-return hose

9 Power, CAN, 4-gas assembly

9c Power cable, 120 VAC

9d CAN cable

9e Four gas hoses (CorePlus)

10 Torch lead

11 Hoses for supply gases

***** Regulator

Put a gas regulator three meters (10 feet) or less from the gas connect console, or adjust inlet gas pressures to be in the specified process gas tolerances.

System configuration with VWI or OptiMix gas connect console

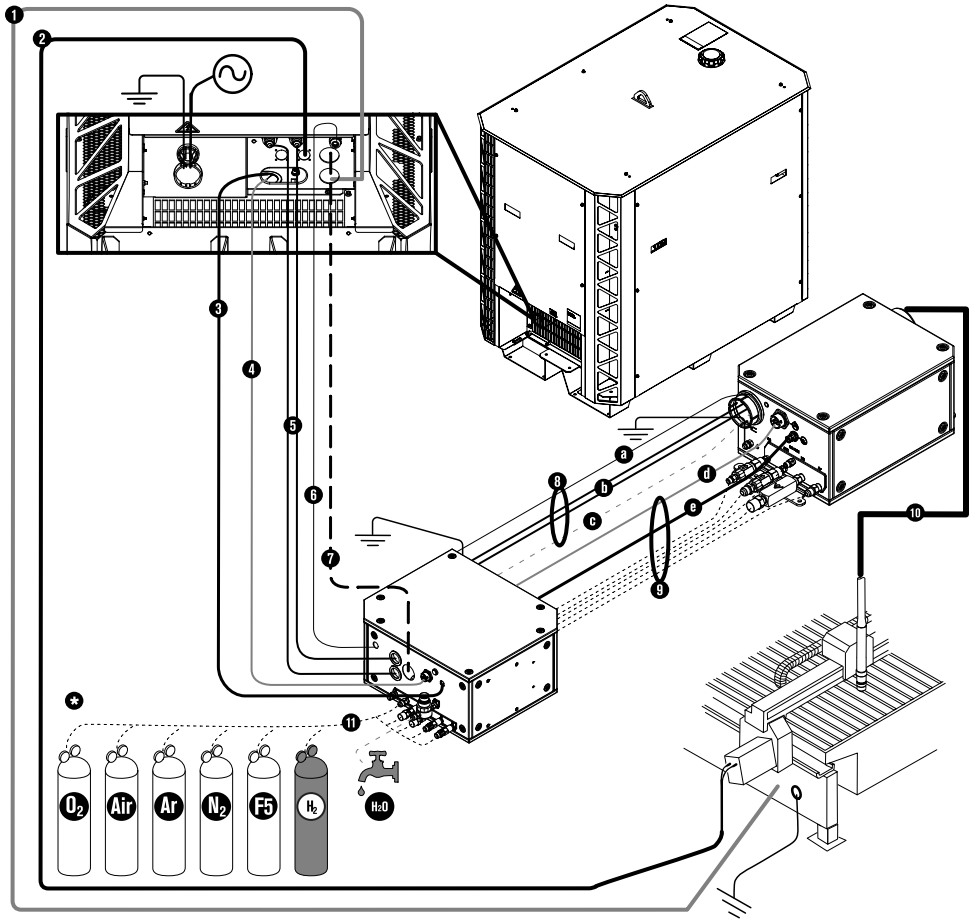

1 Work cable

2 CNC connection cable (EtherCAT shown)

3 CAN cable

4 Power cable, 120 VAC

5 Coolant-supply hose and coolant-return hose

6 Pilot-arc cable

7 Negative cable (2/0 or 4/0)

8 Pilot-arc, coolant, and shield-water assembly

8a Pilot-arc cable

8b Coolant-supply hose and coolant-return hose

8c Shield water hose (VWI or OptiMix)

9 Power, CAN, 5-gas assembly

9d Power cable, 120 VAC

9e CAN cable

9f Five gas hoses (VWI or OptiMix)

10 Torch lead

11 Hoses for supply gases/shield water

***** Regulator

Put a gas regulator three meters (10 feet) or less from the gas connect console, or adjust inlet gas pressures to be in the specified process gas tolerances.

Installation steps

Use this information to install the different system components.

Put the system components in position

Put the plasma power supply in position

The plasma power supply weighs as much as 454 kg (1,002 lb), based on voltage configuration. It must be lifted and moved with care to avoid injury or damage.

Before you begin:

- Requirements to put system components in position on page 61
- Worksite requirements for system components on page 65

⚠ WARNING



HEAVY EQUIPMENT CAN CAUSE SERIOUS INJURY IF DROPPED – LIFT CAREFULLY

When lifting or moving a heavy component:

- Remove all cables, wires, and other potential obstacles that can get caught on the component.
- Only use lift equipment that can safely lift and support the component.
- If you use the lift eye to lift the component, lift only that component. Do not exceed the maximum lift-eye rating.
- If you use a lift truck, use one with forks that extend along the entire bottom of the component. The bottom of the component has lift-truck slots. Make sure to use them.
- Carefully put when you put the plasma power supply into position. Do not drop it from any height.

1. Make sure that the equipment you use to lift and move heavy system components has these features and capabilities:

Lift truck forks	Lift truck forks must be long enough to fully support and extend along the entire bottom of the system component and rated to hold its weight.
Lifting equipment	Lifting equipment must be rated to hold the weight of the system component.

2. Use approved equipment with slow speeds to balance, lift, move, and put the plasma power supply in a position that obeys requirements for your cutting system configuration and plasma power supply type.

Put the gas connect console in position

All gas connect consoles have three mounting holes on the bottom panel.

Before you begin:

- Requirements to put system components in position on page 61

- Worksite requirements for system components on page 65

1. Put the gas connect console in a position that obeys requirements for your cutting system configuration and gas connect console type.

   If you have questions about when or how to use the mounting holes, aid is available. Speak to your cutting machine supplier or regional Hypertherm Technical Service team.

2. Use the mounting holes on the bottom panel to install the gas connect console as shown.

   The following images show mounting-hole locations and dimensions by gas connect console type:

Figure 11 - Mounting-hole locations and dimensions for the Core, CorePlus, and VWI gas connect console

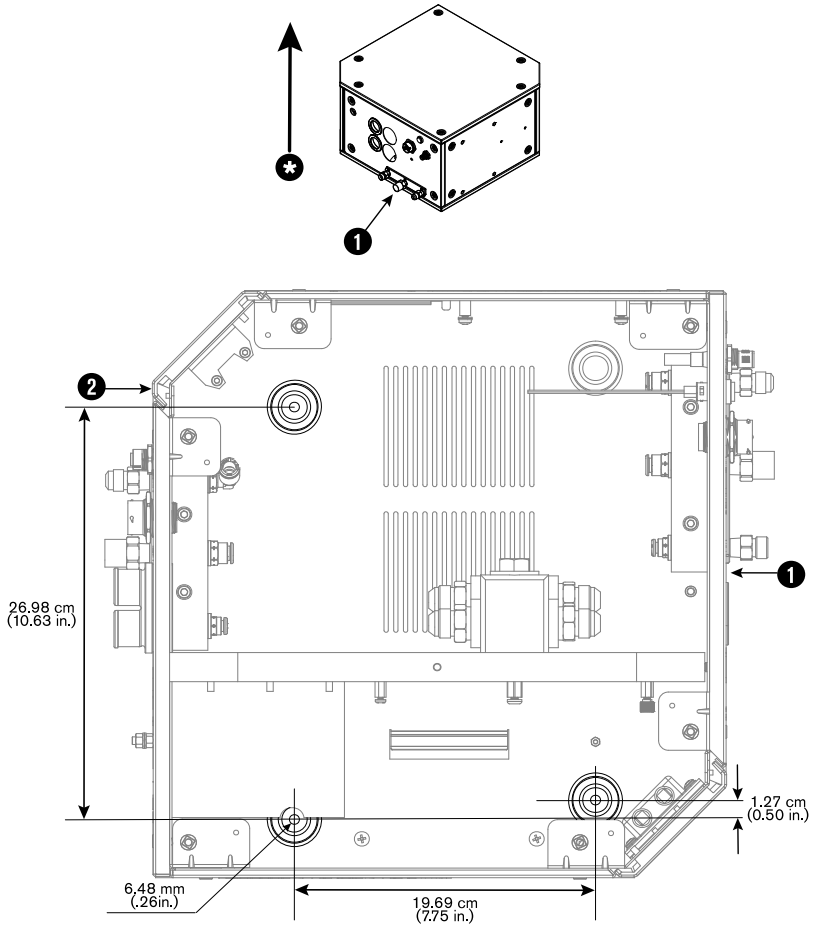

1 Gas-inlet side

2 Gas-outlet side

***** Correct orientation. Never install the gas connect console at an angle.

Figure 12 - Mounting-hole locations and dimensions for the OptiMix gas connect console

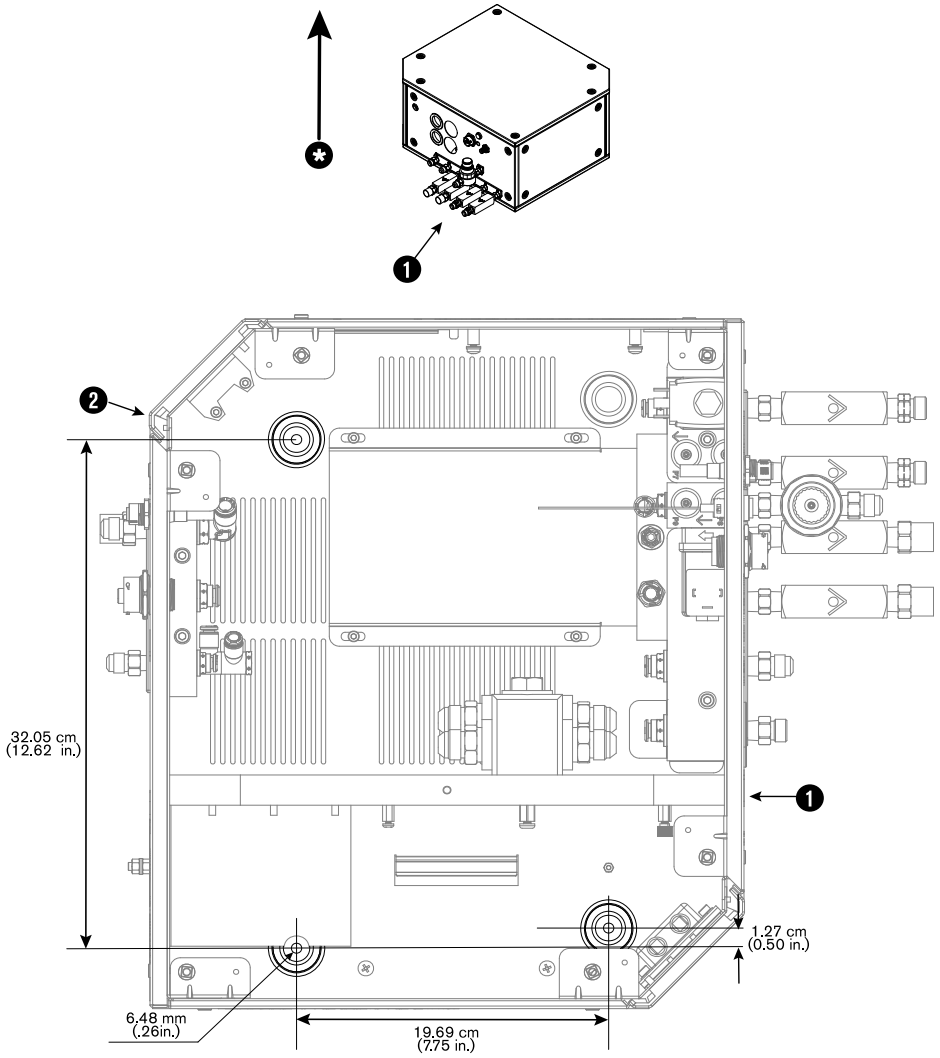

1 Gas-inlet side

2 Gas-outlet side

***** Correct orientation. Never install the gas connect console at an angle.

Put the TorchConnect console in position

There are three options to put the TorchConnect console in position. The factory-installed location for the mounting brackets is on the bottom panel of the console. But, you can move the brackets to the side panel of the console.

Before you begin:

- Requirements to put system components in position on page 61
- Worksite requirements for system components on page 65
- A side position with the torch-lead connector on the bottom minimizes the risk that leaked water or coolant will accumulate in the console. Water or coolant in the console can damage internal electrical components.
- A side position with the torch-lead connector on the top makes it necessary to install a support that holds the lead at a minimum bend radius of 15.25 cm (6 in.).

1. Put the TorchConnect console in a position that obeys requirements for your cutting system configuration.

   If you have questions about what position to use or how to install the console, aid is available. Speak to your cutting machine supplier or regional Hypertherm Technical Service team.

2. Use the mounting brackets on the bottom or side panel of the TorchConnect console to put the console in position, as shown.

   The following images show the three options to put the TorchConnect console in position:

Figure 13 - The three options to put the TorchConnect console in position

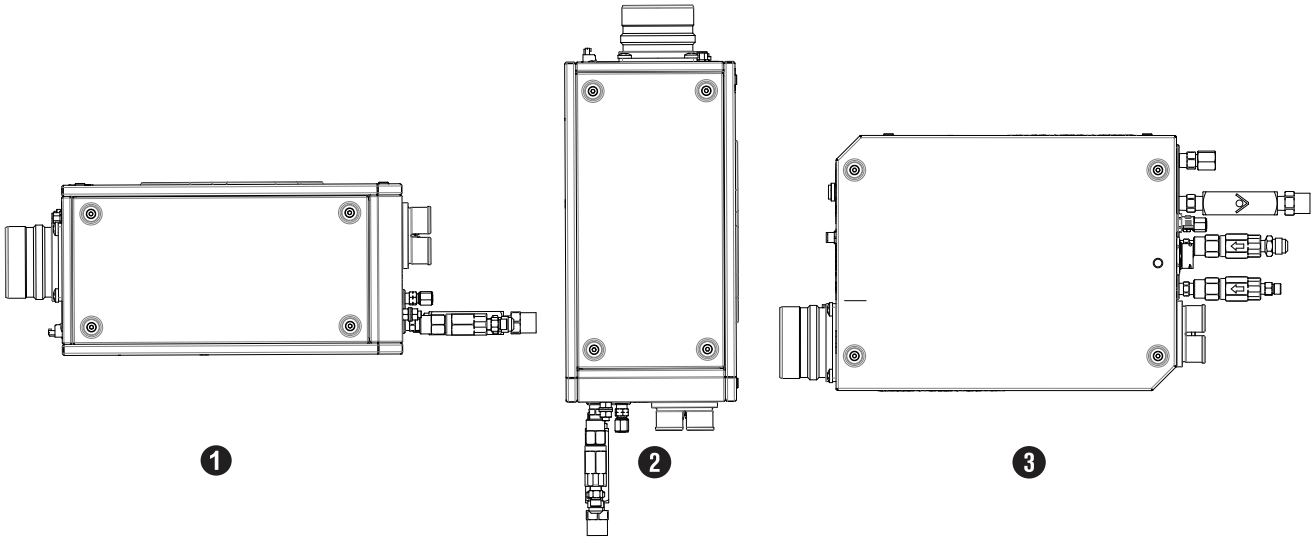

1 Bottom

2 End

3 Side

Figure 14 - Mounting-bracket locations and dimensions for the bottom-panel position

Figure 14 - Mounting-bracket locations and dimensions for the bottom-panel position (continued)

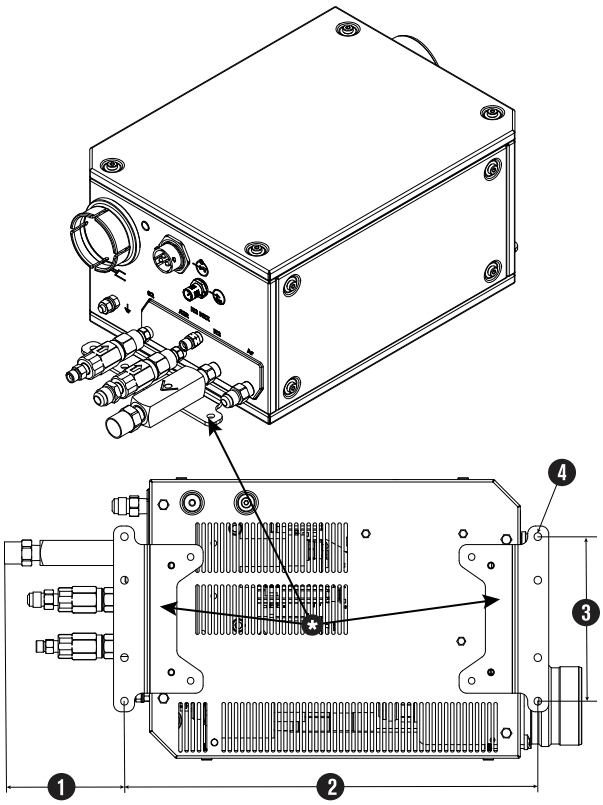

1 83.41 mm (3.28 in.)

2 339.85 mm (13.38 in.)

3 135 mm (5.31 in.)

4 6.35 mm (0.25 in.)

Figure 15 - Mounting-bracket locations and dimensions for the side-panel position

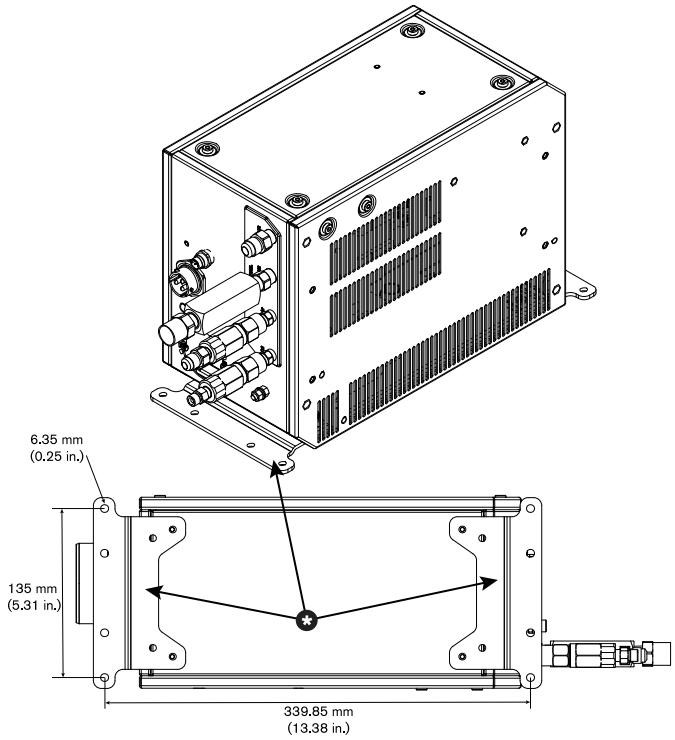

Ground the system components

System components that are correctly grounded can protect operators and equipment from dangerous voltages. Ground the system components after they are in position, and before you connect the hoses, cables, and leads.

Before you begin:

- Put the system components in position.
- Refer to Recommended grounding and shielding on page 72.
- Ground the plasma power supply.

Figure 16 - Location of the ground connection on the plasma power supply

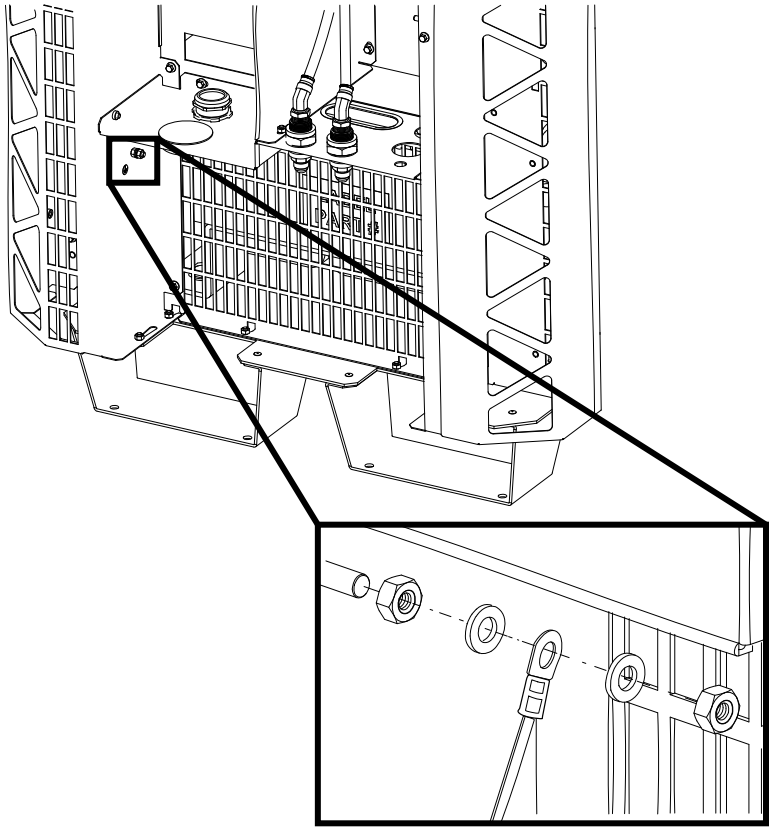

- Ground the gas connect console.

Figure 17 - Location of the ground connection on example gas connect consoles

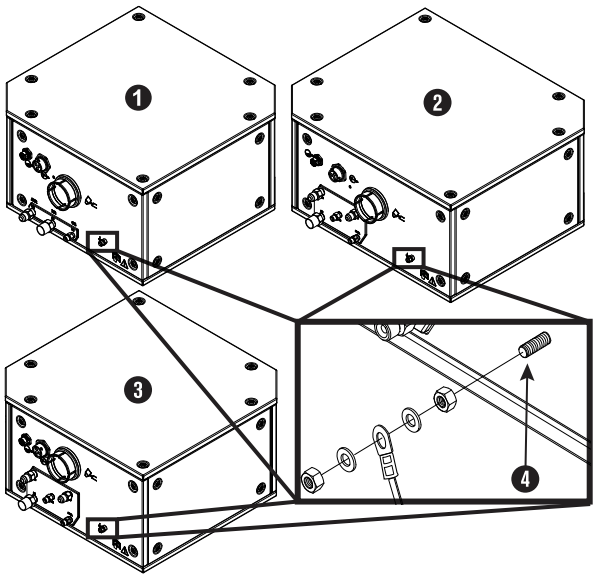

Figure 17 - Location of the ground connection on example gas connect consoles (continued)

1. Core and CorePlus gas connect console
2. OptiMix gas connect console
3. VWI gas connect console
4. Location of the ground connection

- Ground the TorchConnect console.

Figure 18 - Location of the ground connection on the TorchConnect console

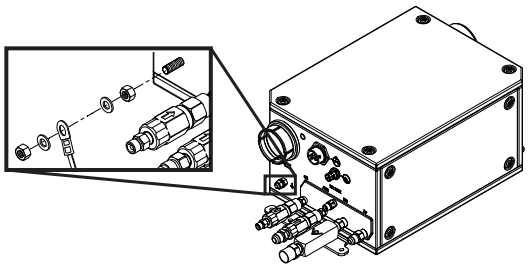

- Ground the torch.

Figure 19 - Location of the ground connection on the torch-lead collar

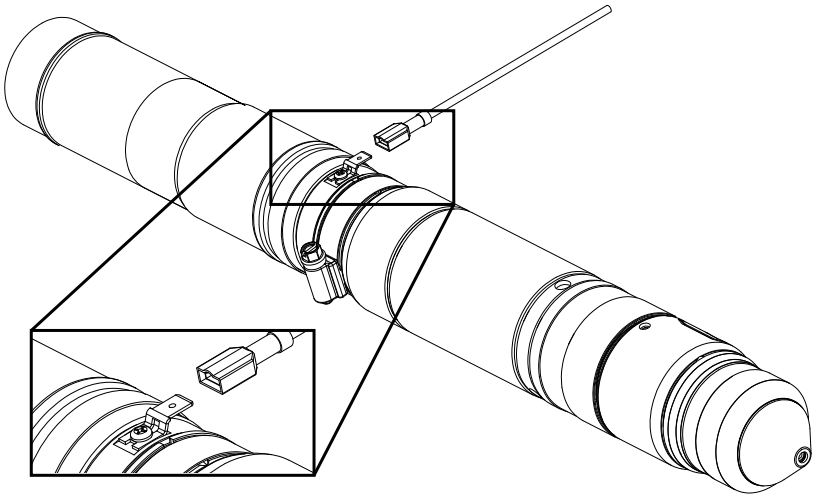

Remove external panels from the system components

Before you begin:

⚠ WARNING



ELECTRIC SHOCK CAN KILL

The plasma power supply contains dangerous electric voltages that can seriously injure or kill you. Even if the plasma power supply is turned OFF, you can still get a serious electric shock if the plasma power supply remains connected to an electric power source.

Use extreme caution if you do diagnosis or maintenance tasks when the plasma power supply remains connected to an electric power source and the outer cover or panels are removed. All work that requires removal of the plasma power supply outer cover or panels must be done by a qualified technician. Refer to the *Safety and Compliance Manual (80669C)* for more safety information.

Before you remove any panels, make sure that **all** electric power is removed from the cutting system.

When the remote on-off switch is set to OFF (disabled), electric power stays ON (active) to the following parts:

- Power-indicator LED on the front of the plasma power supply
- Control PCB
- Control transformer (can be different on input and output)
- 24 V power source
- 120 VAC on the power distribution PCB
- 220 VAC on the power distribution PCB
- 120 VAC to the input side of the 48 V power relay

- Remove the rear panel from the plasma power supply.

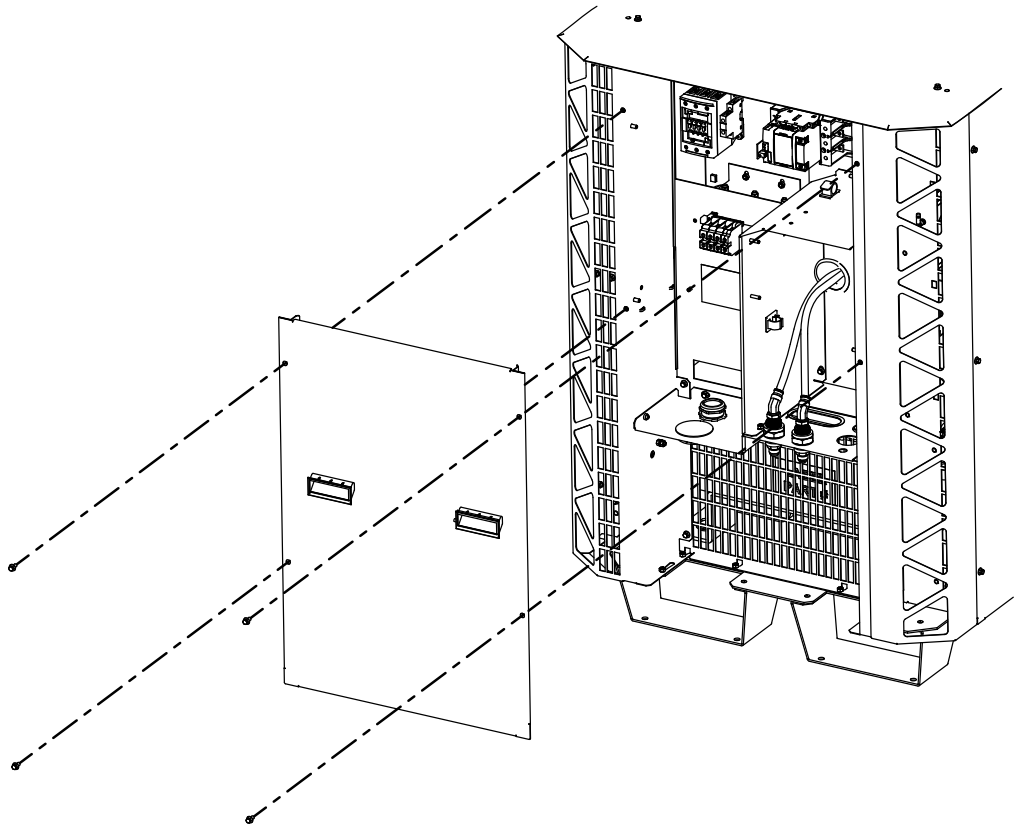

For installation usually it is necessary to remove only the rear panel.

- Remove external panels from the gas connect console.

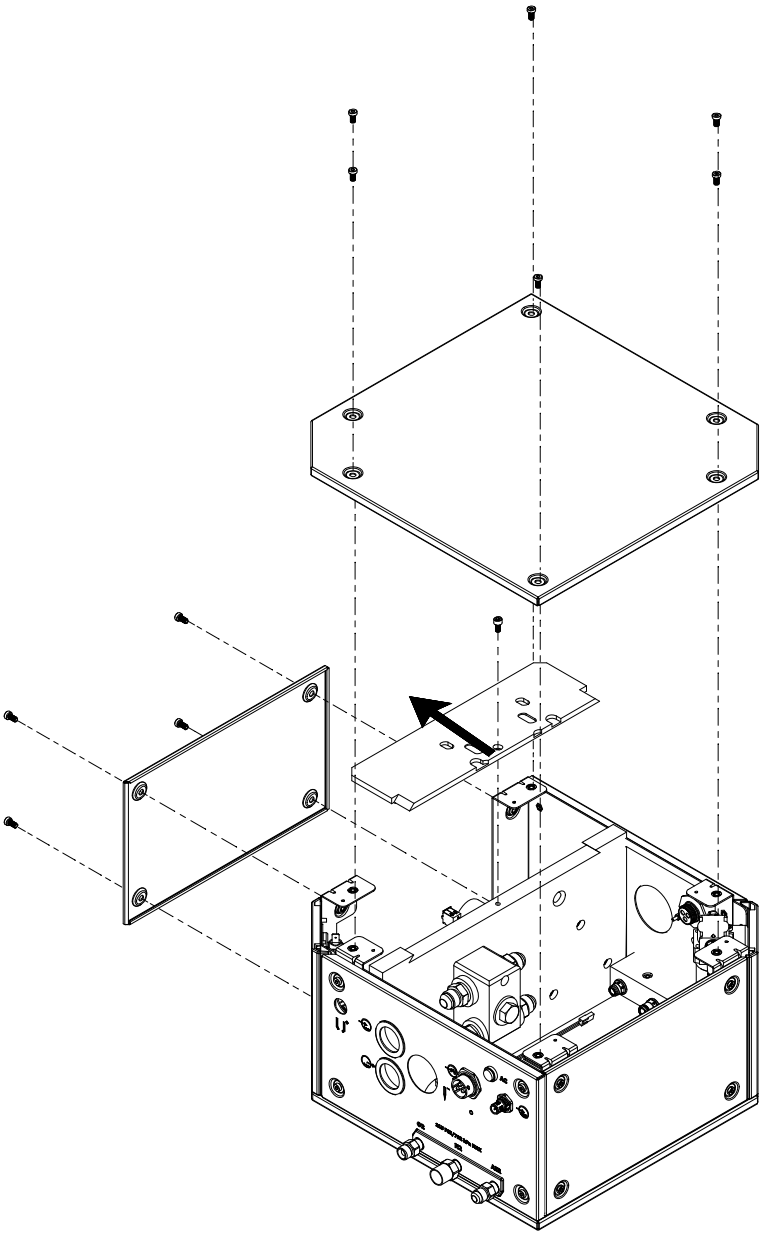

If your gas connect console has a top insulation panel, you must move the panel horizontally to remove it. Not all gas connect consoles have a top insulation panel.

- Remove external panels from the TorchConnect console.

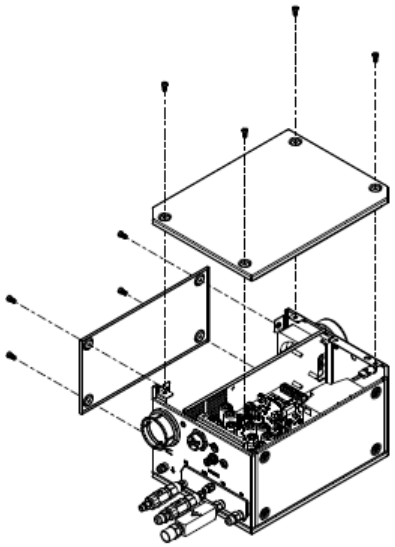

Prepare the hoses, cables, and leads

Before you install the hoses, cables, and leads, uncoil and examine them.

1. Use a hand-over-hand motion to uncoil the hoses, cables, and leads.

   Keep the flat part of each hose, cable, or lead on the floor as you uncoil it. Do not pull from one end to uncoil.

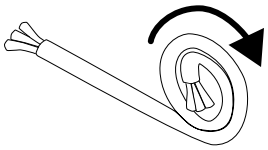

NOTICE
PULLING FROM ONE END TO UNCOIL HOSES, CABLES, AND LEADS CAN CAUSE DAMAGE. To avoid equipment damage, do not pull from one end to uncoil hoses, cables, and leads.

2. Make sure that you have the correct hoses, cables, and leads.

   New hoses, cables, and leads ship with a tag or label that has a part number for identification. Do not order or use cables, hoses, or leads that are incorrect or longer than necessary. If you coil a cable or lead because it is too long, EMI problems can occur. EMI problems can have a bad effect on system performance.

3. Examine each hose, cable, and lead for damage.

Equipment damage can have a bad effect on system performance. Speak to your cutting machine supplier or regional Hypertherm Technical Service team.

Connect the plasma power supply

Use this information to connect the hoses, cables, and leads to the plasma power supply.

Before you begin:

- Put the plasma power supply in position on page 91
- Ground the system components on page 97
- Prepare the hoses, cables, and leads on page 103
- Refer to the label that shows the symbols and connectors on the rear of the plasma power supply.

Figure 20 - Example label that shows the symbols and connectors on the rear of the plasma power supply

Figure 20 - Example label that shows the symbols and connectors on the rear of the plasma power supply (continued)

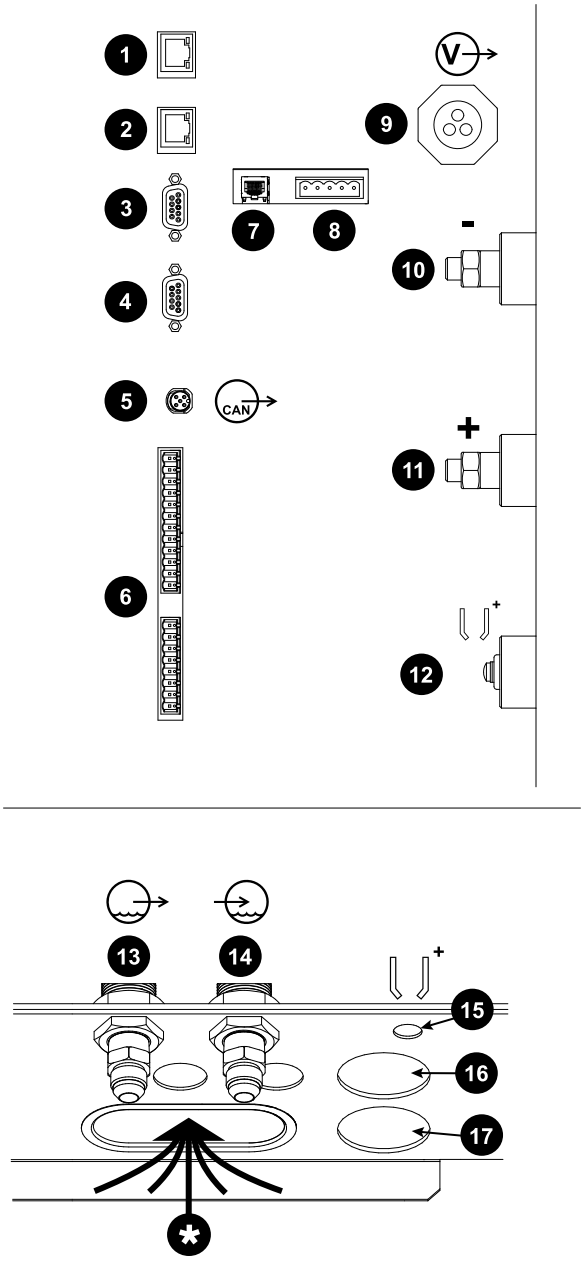

1		EtherCAT-out connection
2		EtherCAT-in connection
3		RS-422 connection
4	-	RS-422 connection
5	CAN	CAN connection

Figure 20 - Example label that shows the symbols and connectors on the rear of the plasma power supply (continued)

6		CNC discrete
7		Ethernet LAN port
8		Expansion PCB connectors: Necessary for redundant remote on-off feature, alternate 24 VDC power input, and analog estimated arc voltage output.
9		Power connection
10	-	Negative connection
11	+	Work connection
12		Pilot arc connection
13		Coolant supply (green)
14		Coolant return (red)
15		Pilot arc routing hole
16	-	Negative connection routing hole
17	+	Positive connection routing hole
*		Use this routing hole for the following cords, cables, and leads: power, RS-422, CNC discrete, EtherCAT-in, EtherCAT-out, Ethernet LAN cable with expansion PCB cable, and CAN.

1. Connect the coolant-hose assembly to the plasma power supply from the gas connect console.

   Tighten each nut until snug.

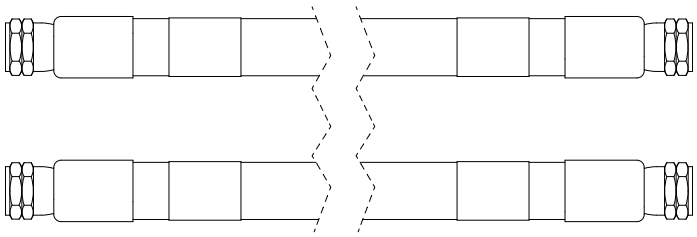

The coolant-hose assembly includes one coolant-supply hose with green bands and one coolant-return hose with red bands.

Refer to Coolant-hose assemblies (plasma power supply to gas connect console) on page 438 for lengths and part numbers.

2. Connect the 120 VAC power cable to the plasma power supply from the gas connect console.

   Make sure this connection is tight.

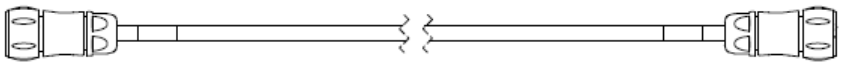

At least one 120 VAC power cable is necessary for all cutting systems. Some cutting systems use one 120 VAC power cable and one 220 VAC power cable.

Refer to Power cable, 120 VAC on page 437 for lengths and part numbers.

3. Connect the CAN cable to the plasma power supply from the gas connect console.

   Make sure this connection is tight.

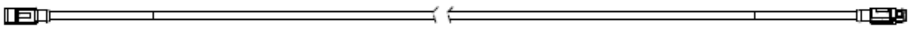

Refer to CAN cables on page 438 for lengths and part numbers.

4. Connect the pilot-arc cable to the plasma power supply from the gas connect console.

   Tighten the screw until snug.

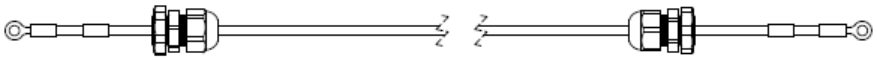

Refer to Pilot-arc cables with strain relief on page 436 for lengths and part numbers.

5. Connect the negative cable to the plasma power supply from the gas connect console.

   Tighten the nut until snug.

   a. Remove the inner nut from the strain relief assembly on the negative cable.
   b. Put the cable and strain relief nut for the negative cable through the hole in the sheet metal panel.
   c. Put the inner nut from the strain relief assembly over the end of the negative cable.
   d. Tighten the inner nut to the strain relief nut for the negative cable.

Figure 21 - Negative cable with strain relief

Figure 21 - Negative cable with strain relief (continued)

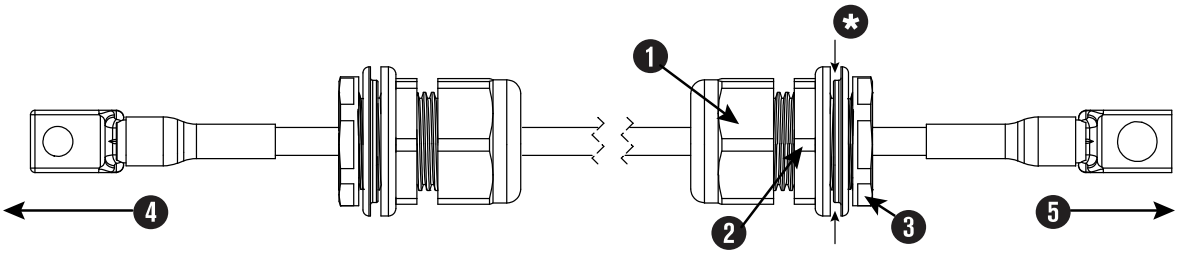

1 Outer nut

2 Strain relief nut

3 Inner nut

4 To plasma power supply

5 To gas connect console

***** The sheet metal of the internal console panel intersects here.

Refer to Negative cables with strain relief on page 437 for lengths and part numbers.

6. Connect the work cable to the plasma power supply from the cutting table.

   Tighten the nut until snug.

Figure 22 - Work cable with strain relief

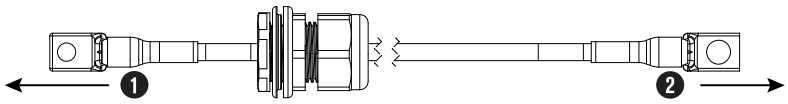

1 This end goes to the plasma power supply.

2 This end goes to the cutting table.

At least one work cable is necessary for all cutting systems. Some cutting systems use two work cables.

Refer to Work cables on page 444 for lengths and part numbers.

Figure 23 - Connections complete on the rear of the plasma power supply

Figure 23 - Connections complete on the rear of the plasma power supply (continued)

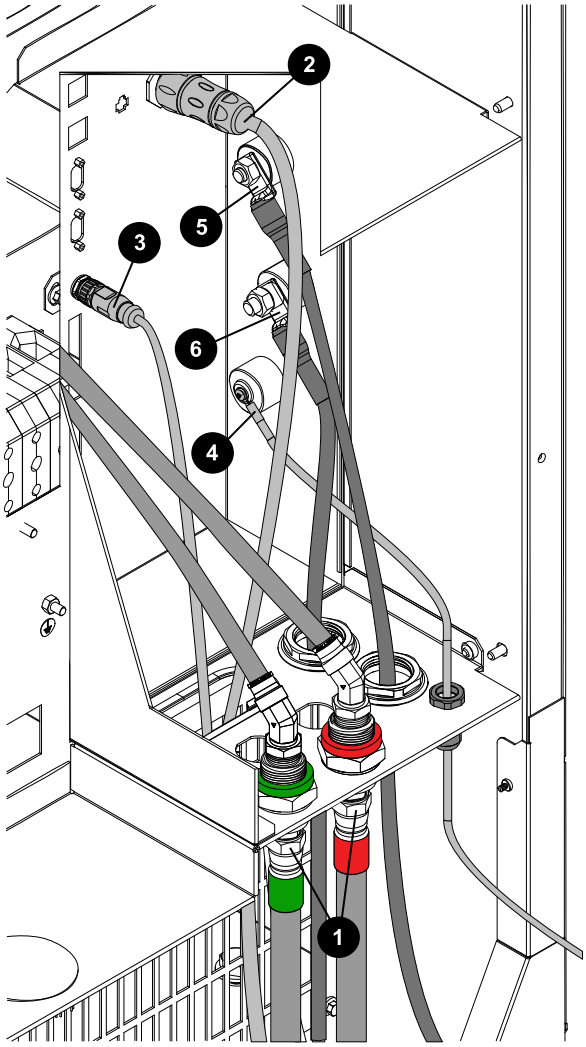

1 Coolant supply, green and coolant return, red

2 Power cable to the gas connect console

3 CAN cable to the gas connect console

4 Pilot-arc cable to the gas connect console

5 Negative cable to the gas connect console

6 Work cable to the cutting table

Connect the gas connect console

Use this information to connect the hoses, cables, and leads to the gas connect console.

Before you begin:

- Put the gas connect console in position on page 92
- Ground the system components on page 97
- Prepare the hoses, cables, and leads on page 103
- Refer to the image that shows the connections on the gas connect console.

Figure 24 - Connectors for hoses, cables, and leads in the gas connect console

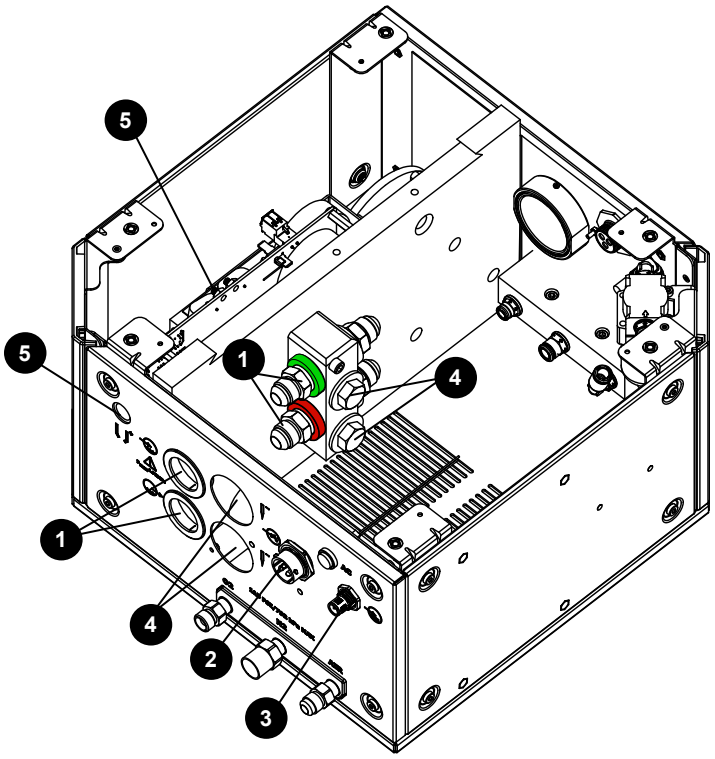

1 Coolant-supply (green) and coolant-return (red) hoses

2 Power cable, 120 VAC

3 CAN cable

4 Negative cables

5 Pilot-arc cable

The images that follow show an example gas connect console. Your gas connect console could look different.

1. Connect the coolant-hose assembly to the gas connect console from the plasma power supply.

   Tighten each nut until snug.

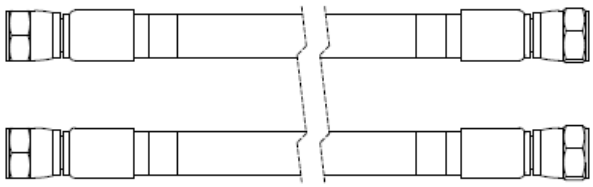

The coolant-hose assembly includes one coolant-supply hose with green bands and one coolant-return hose with red bands. At least one coolant-hose assembly is necessary for all cutting systems. Some cutting systems use two coolant-hose assemblies.

a. Connect the coolant-return hose with the red bands to the coolant-return fitting with the red band.

b. Connect the coolant-supply hose with the green bands to the coolant-supply fitting with the green band.

2. Connect the female cable connector on the 120 VAC power cable to the gas connect console from the plasma power supply.

   Make sure this connection is tight.

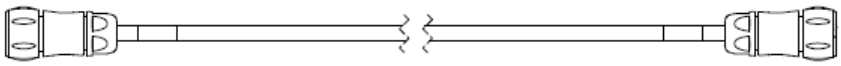

At least one 120 VAC power cable is necessary for all cutting systems. Some cutting systems use one 120 VAC power cable and one 220 VAC power cable.

3. Connect the female cable connector on the CAN cable to the gas connect console from the plasma power supply.

   Make sure this connection is tight.

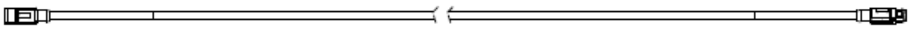

4. Connect the negative cable or cables to the coolant manifold in the gas connect console from the plasma power supply.

   Tighten the nut until snug.

Figure 25 - Negative cable with strain relief

Figure 25 - Negative cable with strain relief (continued)

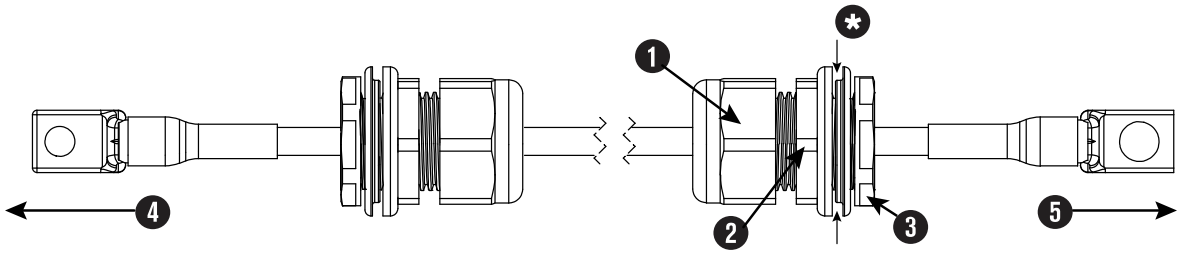

1 Outer nut

2 Strain relief nut

3 Inner nut

4 To plasma power supply

5 To gas connect console

***** The sheet metal of the internal console panel intersects here.

At least one negative cable is necessary for all cutting systems. Some cutting systems use two negative cables.

a. Remove the inner nut from the strain relief assembly on the negative cable.

b. Before you put the negative cable through the hole in the sheet metal panel on the gas connect console, remove the two M3 hex nuts to remove the cover for the second strain-relief mounting hole.

c. Put the cable and strain relief nut for the negative cable through the holes in the sheet metal panel.

d. Put the inner nut from the strain relief assembly over the end of the negative cable.

e. Tighten the inner nut to the strain relief nut for the negative cable.

f. If your cutting system uses two negative cables, repeat these steps for the second negative cable.

5. For ease of access, remove the top insulation panel by moving it horizontally before you connect the pilot-arc cable.

   Not all gas connect consoles have a top insulation panel.

6. Connect the pilot-arc cable to the gas connect console from the plasma power supply.

   Tighten the nut until snug.

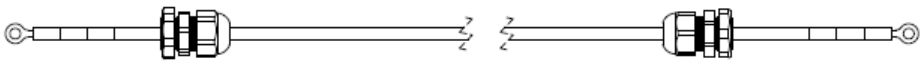

The strain relief nut on the pilot-arc cable is not necessary for this connection. Remove the nut from the cable and tighten the strain relief to the panel on the gas connect console.

Figure 26 - Connections complete for the gas connect console

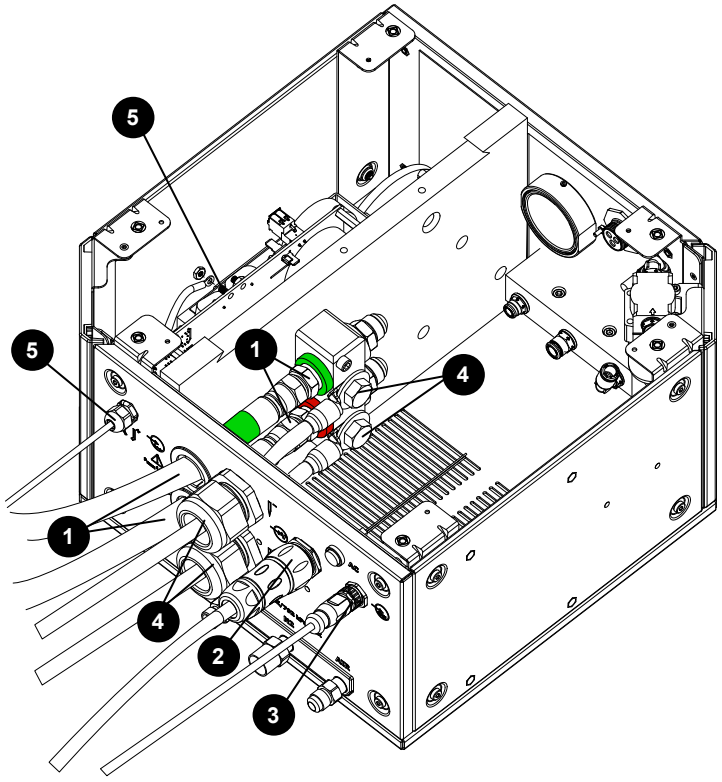

1 Coolant-supply (green) and coolant-return (red) hoses

2 Power cable, 120 VAC

3 CAN cable

4 Negative cables

5 Pilot-arc cable

Connect the gas connect console (Core, CorePlus) to the TorchConnect console

Use this information to connect the Core or CorePlus gas connect console.

- If you have a VWI or OptiMix gas connect console, refer to Connect the gas connect console (VWI, OptiMix) to the TorchConnect console on page 118.

Connect the pilot-arc and coolant assembly for Core or CorePlus

Use this information to connect the pilot-arc cable, coolant-return hose, and coolant-supply hose assembly to the Core or CorePlus gas connect console and the TorchConnect console.

Figure 27 - Pilot-arc and coolant assembly

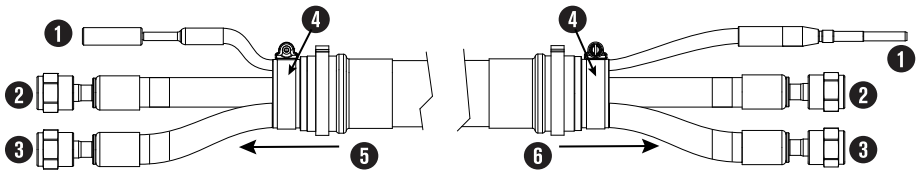

1 Pilot-arc cable, yellow

2 Coolant-return hose, red bands

3 Coolant-supply hose, green bands

4 Assembly coupler

5 To the gas connect console

6 To the TorchConnect console

For lengths, refer to Pilot-arc and coolant assemblies (Core, CorePlus) on page 439.

The images that follow show an example gas connect console. Your gas connect console could look different.

1. Connect the pilot-arc and coolant assembly to the gas connect console:

    a. Put the pilot-arc and coolant assembly through the console collar on the gas connect console.

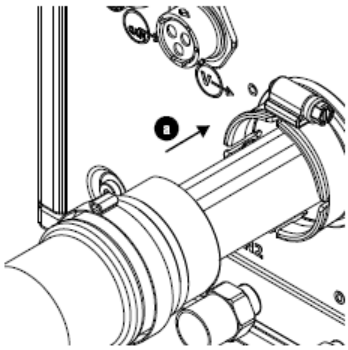

    b. For ease of access, remove the top insulation panel by moving it horizontally before you connect the pilot-arc cable.

    Not all gas connect consoles have a top insulation panel.

c. Connect the pilot-arc cable.

d. Connect the coolant-return hose with the red bands to the coolant-return fitting with the red band.

e. Connect the coolant-supply hose with the green bands to the coolant-supply fitting with the green band.

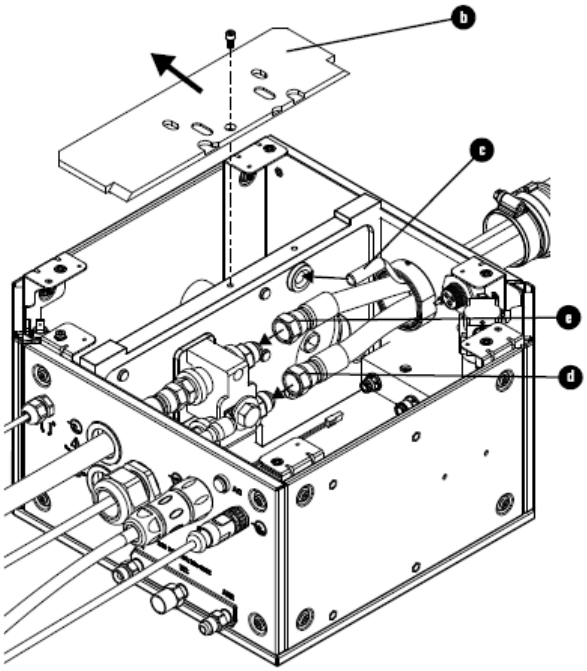

f. Remove the hose clamp from the pilot-arc and coolant assembly, put it in the groove on the console collar.

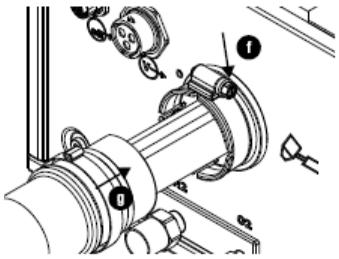

g. Put the assembly coupler on the console collar and tighten the hose clamp.

h. If you removed the top insulation panel, install it again.

2. Connect the pilot-arc and coolant assembly to the TorchConnect console:

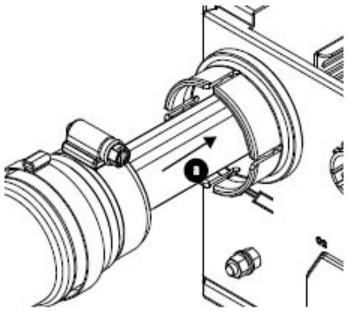

a. Put the pilot-arc and coolant assembly through console collar.

b. Connect the coolant-return hose with red bands to the coolant-return fitting with the red band.

c. Connect the coolant-supply hose with green bands to the coolant-supply fitting with the green band.

d. Connect the pilot-arc cable in the TorchConnect console.

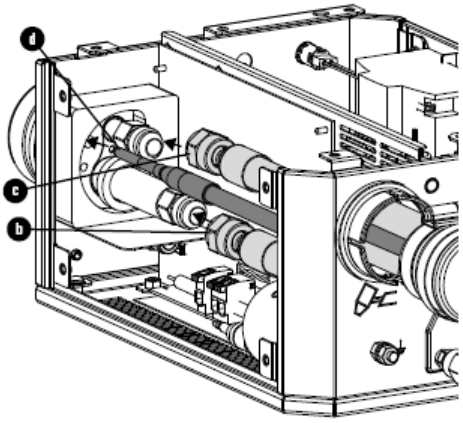

e. Remove the hose clamp from the pilot-arc and coolant assembly, put it in the groove on the console collar.

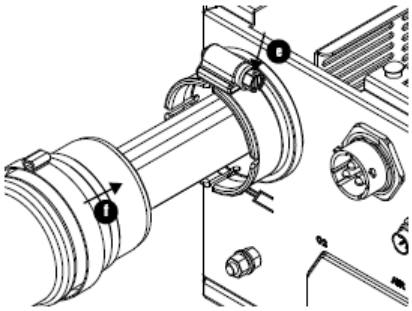

f. Put the coupler on the console collar and tighten the clamp.

3. Install the external panels on the gas connect console and TorchConnect console.

Connect the power, CAN, and 3-gas assembly for Core

Use this information to connect the power cable, CAN cable, oxygen hose, nitrogen hose, and air hose to the Core gas connect console and the TorchConnect console.

Figure 28 - Power, CAN, and 3-gas assembly between an example gas connect console and the TorchConnect console

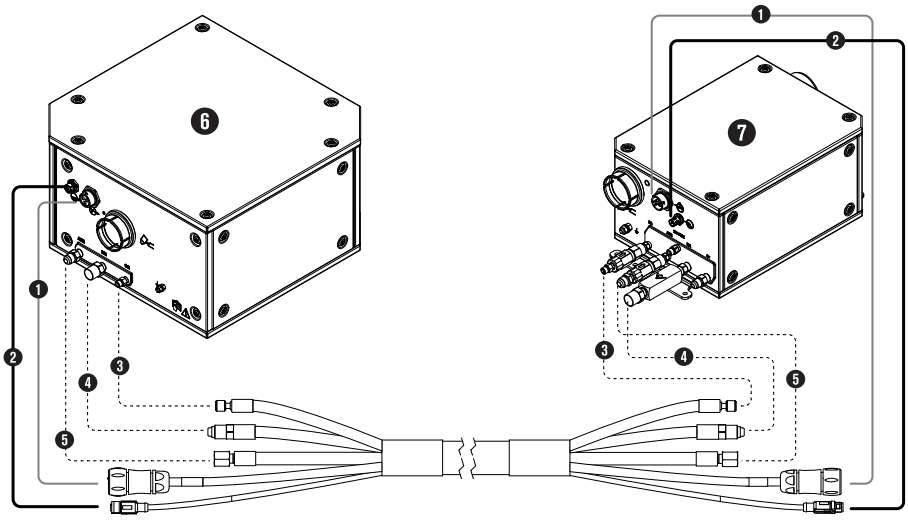

1 Power cable

2 CAN cable

3 Oxygen hose, blue

4 Nitrogen hose, black

5 Air hose, black

6 Core gas connect console

7 TorchConnect console

For lengths, refer to Power, CAN, and 3-gas assemblies (Core) on page 439.

Connect the power, CAN, and 4-gas assembly for CorePlus

Use this information to connect the power cable, CAN cable, oxygen hose, nitrogen hose, air hose, and argon hose to the CorePlus gas connect console and the TorchConnect console.

Figure 29 - Power, CAN, and 4-gas assembly between an example gas connect console and the TorchConnect console

Figure 29 - Power, CAN, and 4-gas assembly between an example gas connect console and the TorchConnect console (continued)

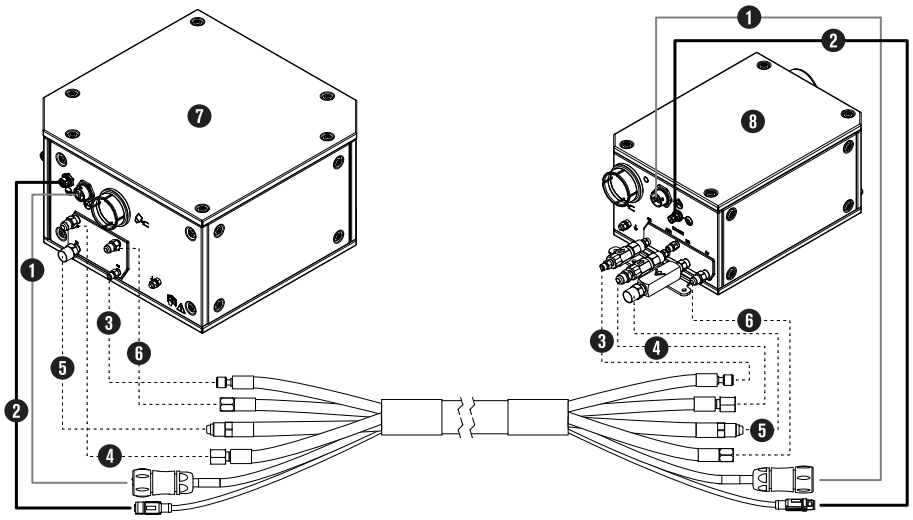

1 Power cable

2 CAN cable

3 Oxygen hose, blue

4 Air hose, black

5 Nitrogen hose, black

6 Argon hose, black

7 Gas connect console

8 TorchConnect console

For lengths, refer to Power, CAN, and 4-gas assemblies (CorePlus) on page 440.

Connect the gas connect console (VWI, OptiMix) to the TorchConnect console

These installation steps are for the VWI or OptiMix gas connect console.

- If you have a Core or CorePlus gas connect console, refer to Connect the gas connect console (Core, CorePlus) to the TorchConnect console on page 113.

Connect the pilot-arc, coolant, and shield-water assembly for VWI or OptiMix

Use this information to connect the pilot-arc cable, coolant-return hose, coolant-supply hose, and shield-water hose assembly to the VWI or OptiMix gas connect console and the TorchConnect console.

Figure 30 - Pilot-arc, coolant, and shield-water assembly

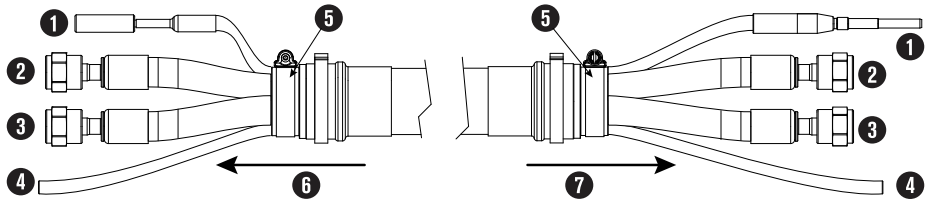

1 Pilot-arc cable, yellow

2 Coolant-return hose, red bands

3 Coolant-supply hose, green bands

4 Shield-water hose

5 Assembly coupler

6 To gas connect console

7 To TorchConnect console

For lengths, refer to Pilot-arc, coolant-hose, and shield-water assemblies (VWI, OptiMix) on page 440.

The images that follow show an example gas connect console. Your gas connect console could look different.

1. Connect the pilot-arc, coolant, and shield-water assembly to the gas connect console:

    a. Put the pilot-arc, coolant, and shield-water assembly through the console collar on the gas connect console.

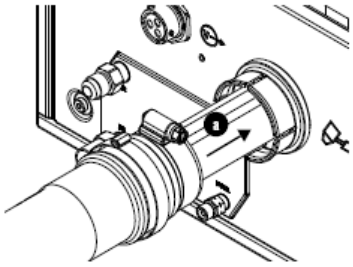

    b. For ease of access, remove the top insulation panel by moving it horizontally before you connect the pilot-arc cable.

Not all gas connect consoles have a top insulation panel.

c. Connect the pilot-arc cable.

d. Connect the coolant-return hose with the red bands to the coolant-return fitting with the red band.

e. Connect the coolant-supply hose with the green bands to the coolant-supply fitting with the green band.

f. Connect the shield-water hose.

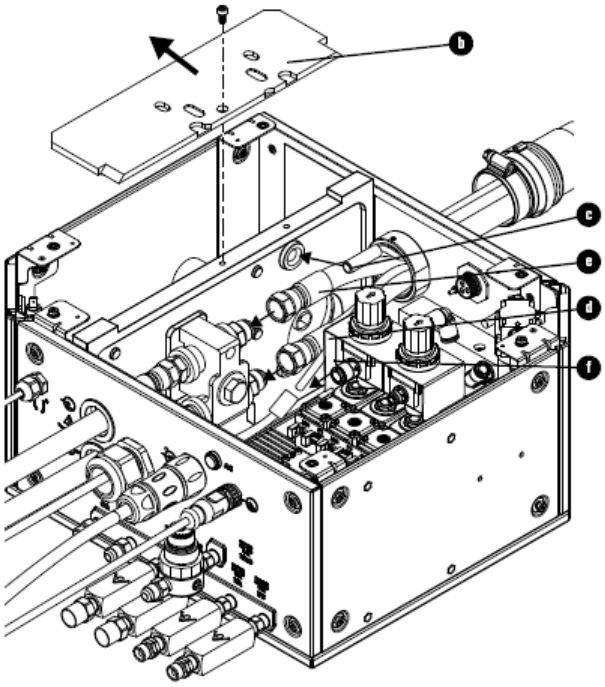

g. Remove the hose clamp from the pilot-arc, coolant, and shield-water assembly, put it in the groove on the console collar.

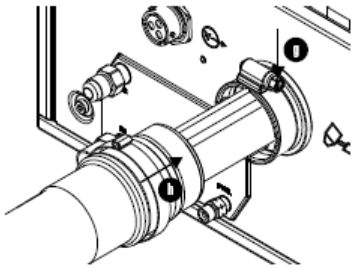

h. Put the assembly coupler on the console collar and tighten the hose clamp.

i. If you removed the top insulation panel, install it again.

2. Connect the pilot-arc, coolant, and shield-water assembly to the TorchConnect console:

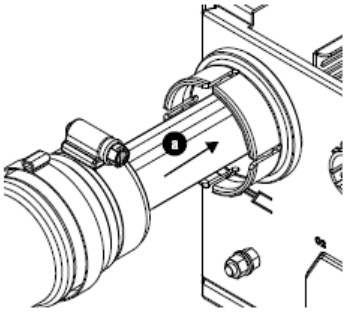

a. Put the pilot-arc, coolant, and shield-water assembly through the console collar on the TorchConnect console.

b. Put the shield-water hose connector in the push-to-connect fitting, push until it stops, approximately 13 mm (0.5 inch).

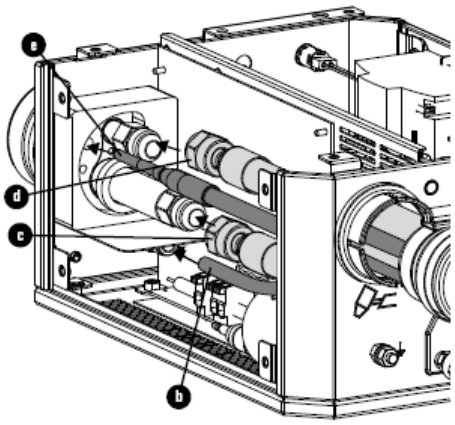

c. Connect the coolant-return hose with the red bands to the coolant-return fitting with the red band.

d. Connect the coolant supply hose with the green bands to the coolant-supply fitting with the green band.

e. Connect the pilot-arc cable.

f. Remove the hose clamp from the pilot-arc, coolant, and shield-water assembly, put it in the groove on the console collar.

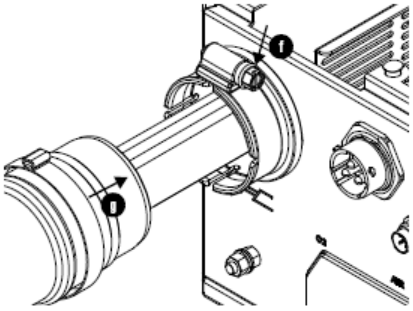

g. Put the assembly coupler on the console collar and tighten the hose clamp.

3. Install the external panels on the gas connect console and TorchConnect console.

Connect the power, CAN, and 5-gas assembly for VWI or OptiMix

Use this information to connect the power cable, CAN cable, oxygen hose, air hose, argon hose, nitrogen hose, and H_2-mix or F5 hose to the VWI or OptiMix gas connect console and TorchConnect console.

Figure 31 - Power, CAN, and 5-gas hose assembly

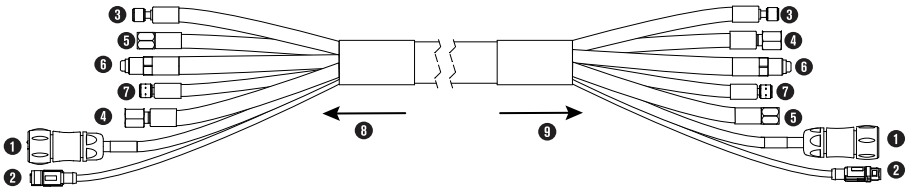

1 Power cable

2 CAN cable

3 Oxygen hose, blue

4 Air hose, black

5 Argon hose, black

6 Nitrogen hose, black

7 H_2-mix or F5 hose, red

8 To the gas connect console

9 To the TorchConnect console

For lengths, refer to Power, CAN, and 5-gas assemblies (VWI, OptiMix) on page 441.

Figure 32 - Power, CAN, and 5-gas hose assembly between an example gas connect console and the TorchConnect console

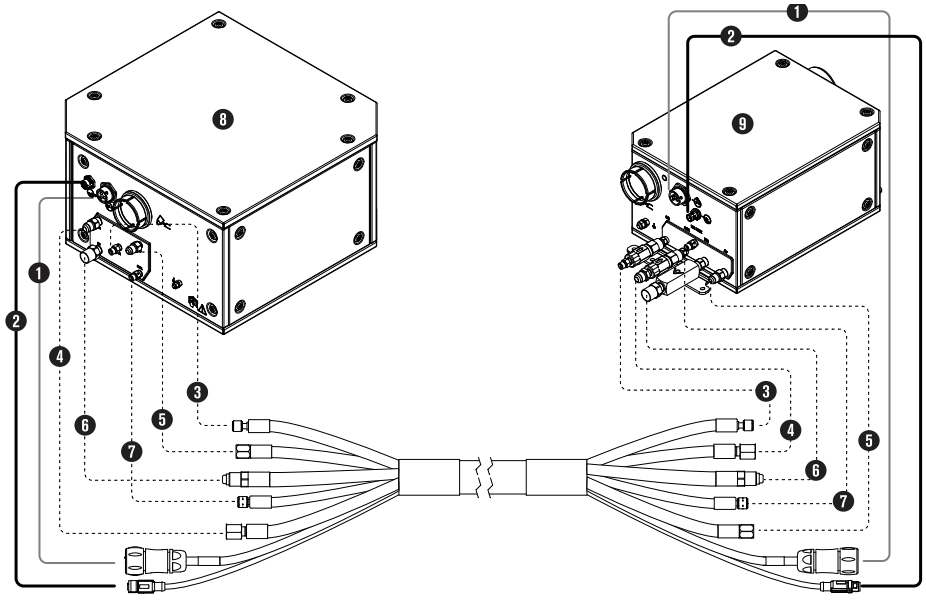

Supply gas installation

Comply with all safety requirements when you install and connect the supply gases for the plasma cutting system. For example, use flashback arrestors, release gases with an exhaust system, and tighten hoses as specified for different hose dimensions.

It is very important to comply with safety requirements if you use hydrogen or oxygen.

⚠ WARNING





HYDROGEN GAS CAN CAUSE AN EXPLOSION OR FIRE

Hydrogen is a flammable gas that can cause an explosion or fire if it is not removed.

Keep flames away from cylinders and hoses that contain hydrogen. Keep flames and sparks away from the torch when using hydrogen as a plasma gas.

Consult your local safety, fire, and building code requirements for the storage and use of hydrogen.

Hypertherm recommends that you install an exhaust ventilation system to remove the hydrogen-enriched atmosphere that can collect when hydrogen is used as the plasma gas for cutting.

Flashback arrestors are REQUIRED to stop the spread of fire to the supply gases (unless a flashback arrestor is not available for a specific gas or pressure).

As an installer or user, you must supply the exhaust ventilation and flashback arrestors for your cutting system. You can get them from your cutting machine supplier.

⚠ WARNING





OXYGEN GAS CAN CAUSE A FIRE HAZARD

If you use oxygen as the plasma gas for cutting, it can cause a potential fire hazard due to the oxygen-enriched atmosphere that collects. A fire can occur if oxygen is not removed.

Hypertherm recommends that you install an exhaust ventilation system to remove the oxygen-enriched atmosphere that can collect when oxygen is used as the plasma gas for cutting.

Flashback arrestors are REQUIRED to stop the spread of fire to the supply gases (unless a flashback arrestor is not available for a specific gas or pressure).

As an installer or user, you must supply the exhaust ventilation and flashback arrestors for your cutting system. You can get them from your cutting machine supplier.

⚠ WARNING

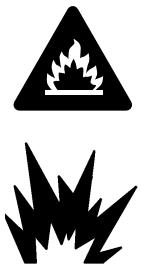

INCORRECT SUPPLY-GAS CONNECTIONS CAN CAUSE AN EXPLOSION OR FIRE

An explosion or fire can occur if a supply-gas hose is connected to the wrong port on a gas connect console.

NEVER connect a supply gas to a hose, connection, or fitting that is not designed for that gas type or pressure.

⚠ WARNING

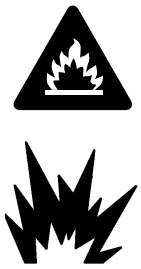

MISSING CHECK VALVES CAN CAUSE AN EXPLOSION OR FIRE

An explosion or fire can occur if the cutting system is operated without check valves.

Never remove a check valve.

NOTICE

PTFE TAPE CAN CAUSE CLOGGED VALVES, REGULATORS, AND TORCHES

Never use PTFE tape on any joint preparation. Use only a liquid or paste thread sealant on male thread ends.

NOTICE

INCORRECT HOSES, CONNECTIONS, OR FITTINGS CAN CAUSE DAMAGE AND BAD PERFORMANCE

Noncompliant hoses, hose connections, or hose fittings can crack or leak. Incorrect fittings can cause malfunctions with the internal valves because contaminants can enter the valves through damaged or loose fittings.

All hoses, hose connections, and hose fittings used for supply-gas plumbing must be designed for use with the appropriate gas and pressure rating. NEVER connect a supply gas to a hose, connection, or fitting that is not designed for that gas type or pressure. A replacement hose, connection, or fitting must meet all applicable regulations and codes.

NOTICE

INCORRECT SUPPLY-GAS FITTINGS CAN CAUSE VALVES TO MALFUNCTION

If you alter or replace the fittings, it can cause the internal valves to malfunction if particulates get inside.

Do not change or replace the supply-gas fittings on the gas connect console.

NOTICE

INCORRECT SUPPLY-GAS CONNECTIONS CAN CAUSE CUTTING SYSTEM DAMAGE

Incorrect connections can reduce the life of consumables and cause damage to the torch head, torch receptacle, torch leads, and torch connect console.

NEVER connect a supply gas to a hose, connection, or fitting that is not designed for that gas type or pressure.

NOTICE

INCORRECT SUPPLY-GAS CONNECTIONS CAN CAUSE BAD PERFORMANCE

Cutting system performance can be bad if a supply-gas hose is connected to the wrong port on a gas connect console.

NEVER connect a supply gas to a hose, connection, or fitting that is not designed for that gas type or pressure.

NOTICE

DIRTY, OILY AIR CAN CAUSE DAMAGE TO THE AIR FILTER BOWL

Some air compressors use synthetic lubricants that contain esters. Esters can cause damage to the polycarbonates in the air filter bowl.

Add more gas filtration if necessary.

NOTICE

INCORRECT GAS PRESSURES CAN CAUSE BAD PERFORMANCE

Gas leaks or pressure and flow rates that are outside of recommended ranges can cause problems with system performance, result in bad cut quality, and shorten the life of consumables.

If the quality of the gas is bad or if the pressure setting is incorrect, it can decrease cut quality, cut speed, and cut thickness capabilities.

Make sure the incoming gas pressure aligns with system specifications.

As an installer or user, you must supply these items for your cutting system:

- High-quality gas regulators
- Supply gas plumbing
- Supply gases



The items that you supply must comply with all minimum requirements and must be installed by an approved technician.

Table 21 - Torque specifications

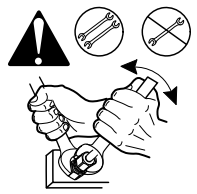	Gas or water hose dimensions	N·m	lbf·in	lbf·ft
	10 mm (3/8 inch) or less	8.5 – 9.5	75 – 84	6.25 – 7
	12 mm (1/2 inch)	16.3 – 19.0	144 – 168	12 – 14
	25 mm (1 inch)	54.2 – 88.1	480 – 780	40 – 65

Install gas regulators

Complete these steps to install gas regulators for the plasma cutting system.

1. Install the gas regulators **before** the supply gas plumbing.

   For installation steps, refer to the instruction manual for the gas regulator.

2. Put a gas regulator 3 meters (10 feet) or less from the gas connect console, or adjust inlet gas pressures to be in the tolerances specified in Process-gas requirements for all gas connect consoles on page 48.

3. After installation, fully pressurize the system, and look for gas leaks.

   Your system installer or a licensed plumber can do this for you.

4. Make sure that all gas fittings are tightened to the correct torque specifications.

   Refer to Supply gas installation on page 123.

Connect supply gases to Core or CorePlus

Make sure that the supply gas lines are correctly connected to the Core or CorePlus gas connect console.

If you have a VWI or OptiMix gas connect console, refer to Connect the supply gases and shield water to VWI or OptiMix on page 130.

Before you begin:

- Make sure that you have the correct supply gas hoses before you connect them.
- Hypertherm recommends a minimum internal diameter of 10 mm (0.375 inch) for supply-gas hoses that are 76 m (250 feet) or less.

Table 22 - Recommended dimensions for gas fittings

Fitting type	Dimensions
N_2 / Ar	5/8 inch – 18, RH internal (inert gas) "B"
Air	9/16 inch – 18, JIC #6
F5 / H_2	9/16 inch – 18, LH (fuel gas) "B"
O_2	9/16 inch – 18, RH (oxygen)

1. Tighten all gas hose fittings to the correct torque specifications.

   Refer to Supply gas installation on page 123.

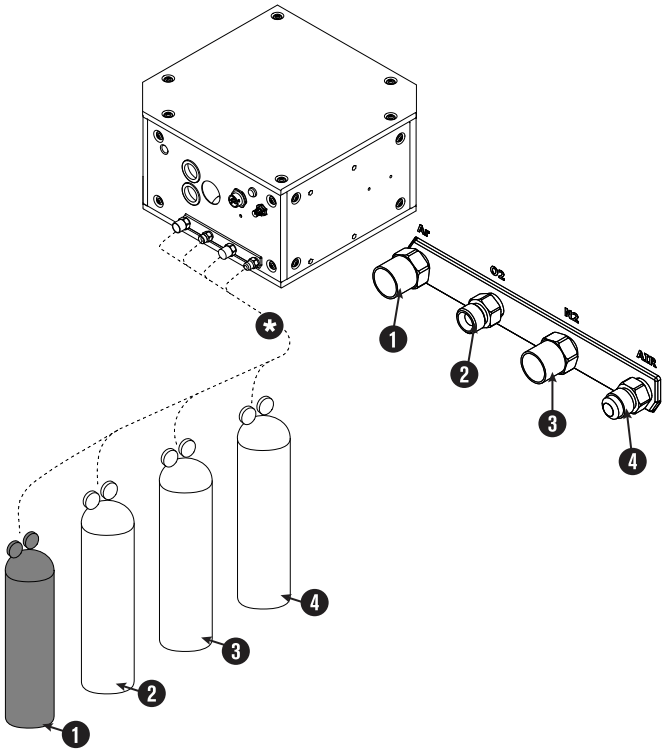

1 Argon (Ar)

2 Oxygen (O_2)

3 Nitrogen (N_2)

4 Air

***** Regulators

For the best results, make sure that the cutting system is prepared to operate and the gases are flowing when you select the gas regulator settings. This is almost equivalent to doing a test for gas preflow and cutflow.

2. After installation is complete, fully pressurize the system, and look for gas leaks.

   Your system installer or a licensed plumber can do this for you.

Connect the supply gases and shield water to VWI or OptiMix

Make sure that the supply gas lines are correctly connected to the VWI or OptiMix gas connect console. Connect the shield water if you are using it.

If you have a Core or CorePlus gas connect console, refer to Connect supply gases to Core or CorePlus on page 128.

Before you begin:

- Make sure that you have the correct supply gas hoses before you connect them.
- Hypertherm recommends a minimum internal diameter of 10 mm (0.375 inch) for supply-gas hoses that are 76 m (250 feet) or less.

Table 23 - Recommended dimensions for gas fittings

Fitting type	Dimensions
N_2 / Ar	5/8 inch – 18, RH internal (inert gas) "B"
Air	9/16 inch – 18, JIC #6
F5 / H_2	9/16 inch – 18, LH (fuel gas) "B"
O_2	9/16 inch – 18, RH (oxygen)

1. Tighten all gas hose fittings to the correct torque specifications.

   Refer to Supply gas installation on page 123.

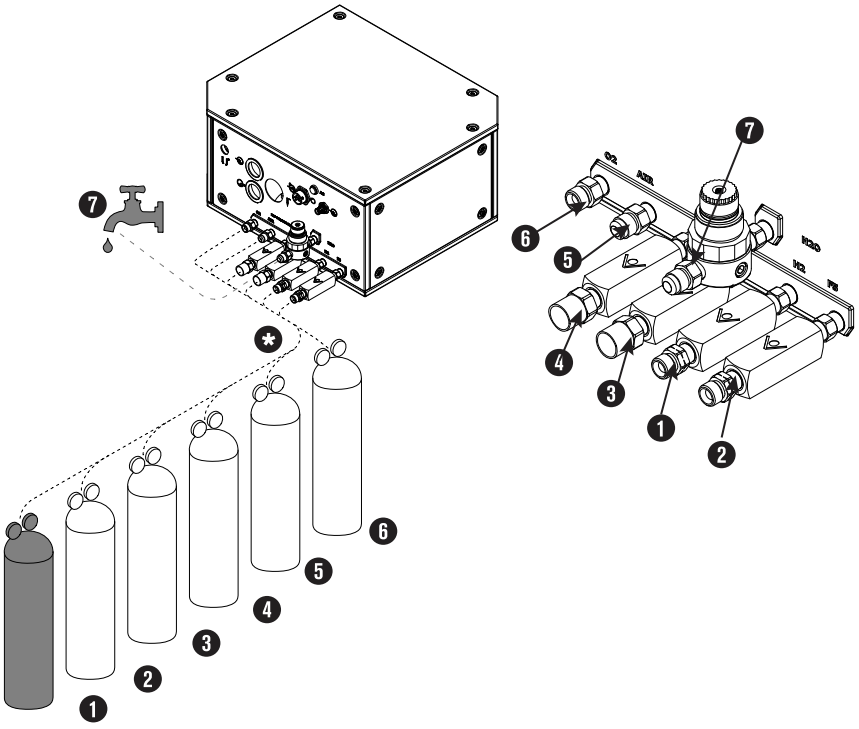

1 Hydrogen (H_2)

2 F5

3 Argon (Ar)

4 Nitrogen (N_2)

5 Air

6 Oxygen (O_2)

7 Shield water (H_2O) only for VWI and OptiMix

***** Regulators

For the best results, make sure that the cutting system is prepared to operate and the gases are flowing when you select the gas regulator settings. This is almost equivalent to doing a test for gas preflow and cutflow.

2. **Optional:**

   Connect the shield water, if necessary.

   - ☐ If you use shield water, refer to Shield-water requirements (VWI and OptiMix) on page 55.
   - ☐ The temperature range for cutting system operation with shield water is decreased to > 0°C to 40°C (> 32°F to 104°F).

3. After installation is complete, fully pressurize the system, and look for gas leaks.

   Your system installer or a licensed plumber can do this for you.

Install the torch-lead assembly to the torch receptacle

Use this information to install the torch-lead assembly to the torch receptacle. For easier installation, make sure that the connections are done in the same sequence as these steps.

1. Unwind approximately 2 meters (6.5 feet) of the torch-end of the torch-lead assembly.
2. Put the torch collar on the connector-end of the torch.
3. Put the torch mounting sleeve on the torch-end of the torch-lead assembly.

   Adjust the mounting sleeve as necessary for good access to the connector ends.

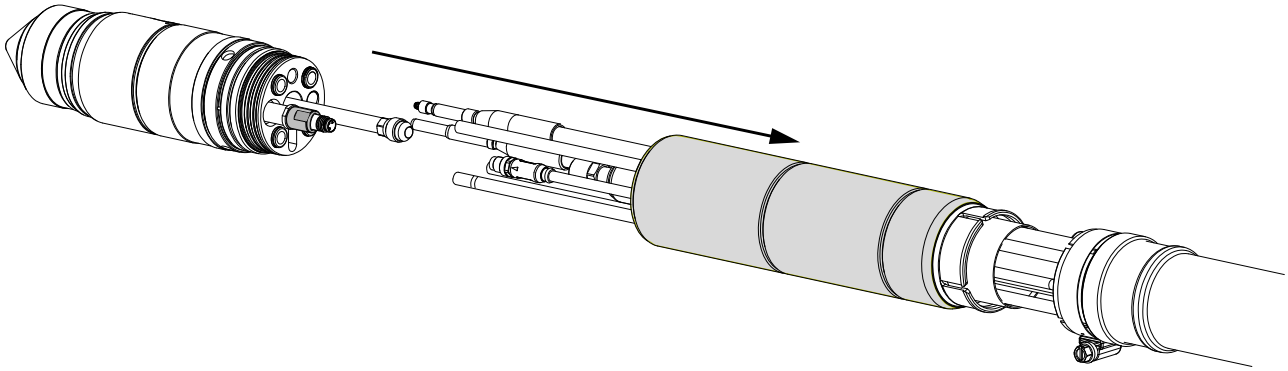

4. Align the connectors in the torch-lead assembly and the torch receptacle.

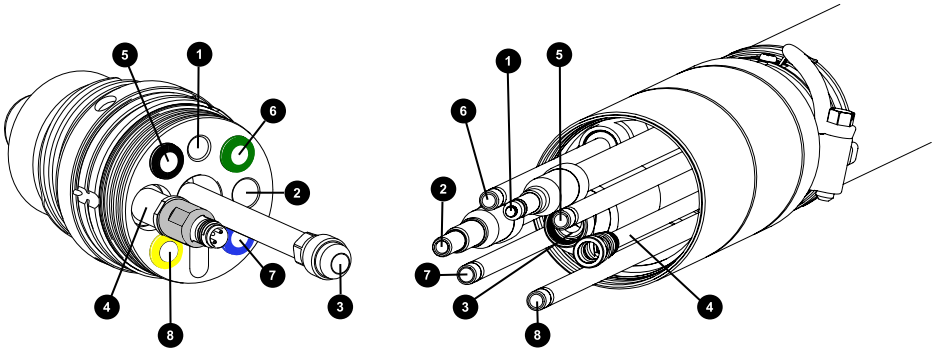

1 Pilot arc

2 Ohmic

3 Coolant return

4 Plasma valve

5 Plasma Line A, black

6 Coolant supply, green

7 Shield gas, blue

8 Plasma Line B, yellow

Good alignment keeps twisted connections to a minimum. Twisted connections can cause gas or coolant restrictions that decrease the life of the consumables or cause bad cut quality.

5. Connect the connectors in the torch-lead assembly and the torch receptacle:

   a. Connect the pilot arc.

      Keep this connection loose for now. You can fully tighten it **after** the coolant-return hose installation is complete. If you fully tighten it before the coolant-return, other connections will be difficult. Use your fingers to tighten the connection, do not use tools.

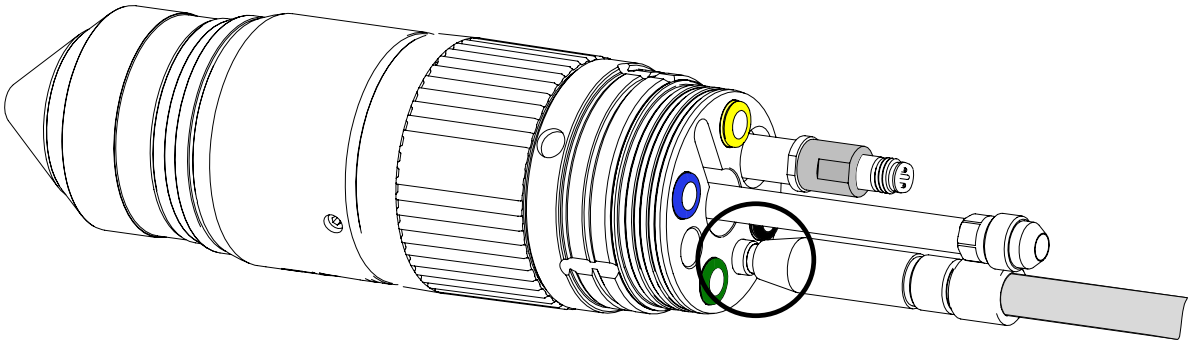

   b. Connect the ohmic cable.

      Keep this connection loose for now. You can fully tighten it **after** the coolant-return hose installation is complete. If you fully tighten it before the coolant-return, other connections will be difficult. Use your fingers to tighten the connection, do not use tools.

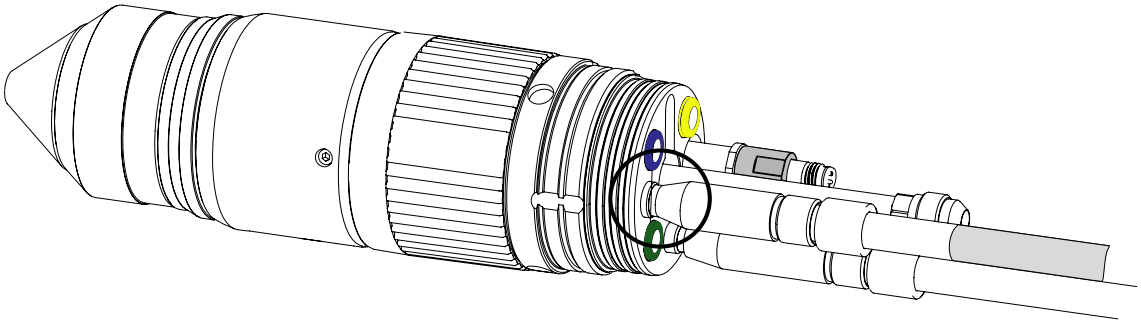

   c. Install the coolant-return hose and use two wrenches to tighten the nut to 16.3 N·m –19.0 N·m (144 lbf·in – 168 lbf·in).

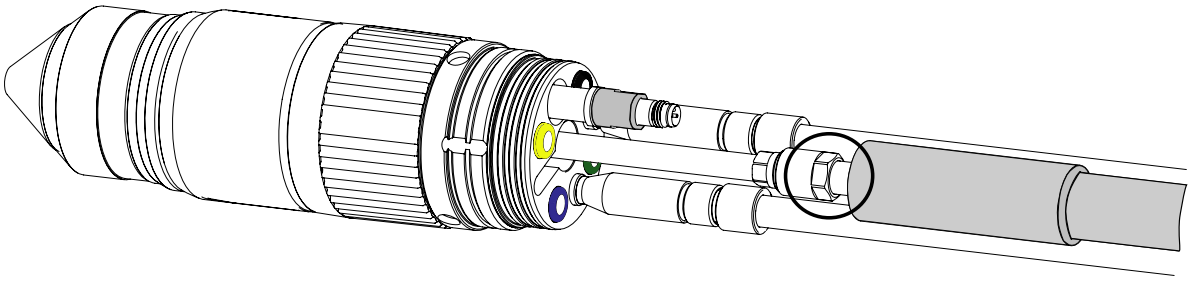

d. After you install the coolant-return hose, fully tighten the pilot arc and ohmic cable connectors.

   Use your fingers to tighten the connection, do not use tools.

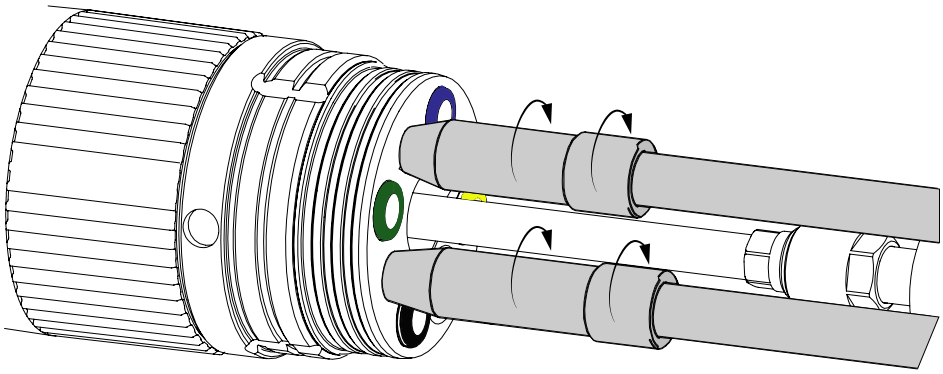

e. Connect the plasma valve.

   Use your fingers to tighten the connection, do not use tools.

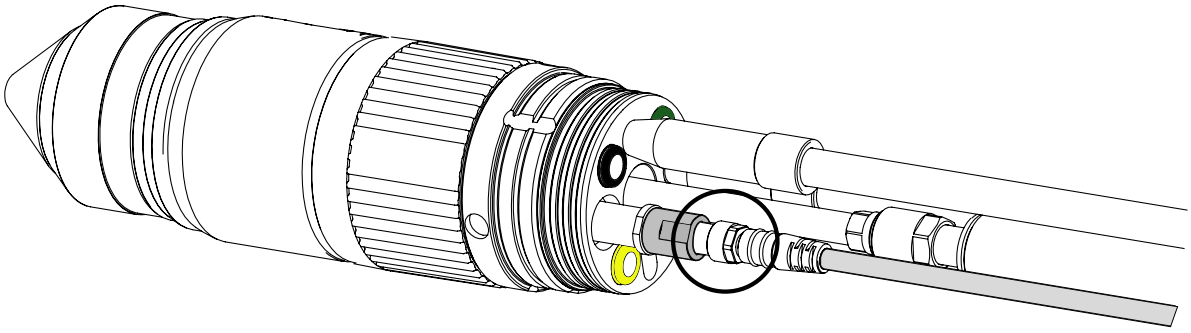

f. Push the Plasma Line A hose in the connector until it stops, approximately 13 mm (0.5 inch).

   This is a push-to-connect fitting. Make sure the hose is fully inserted and the insertion mark is no longer visible.

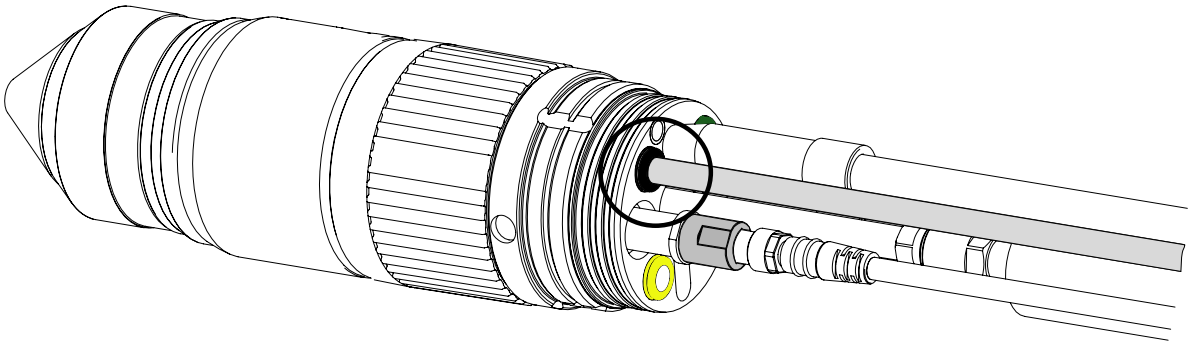

g. Push the coolant-supply hose in the connector until it stops, approximately 13 mm (0.5 inch).

   This is a push-to-connect fitting. Make sure the hose is fully inserted and the insertion mark is no longer visible.

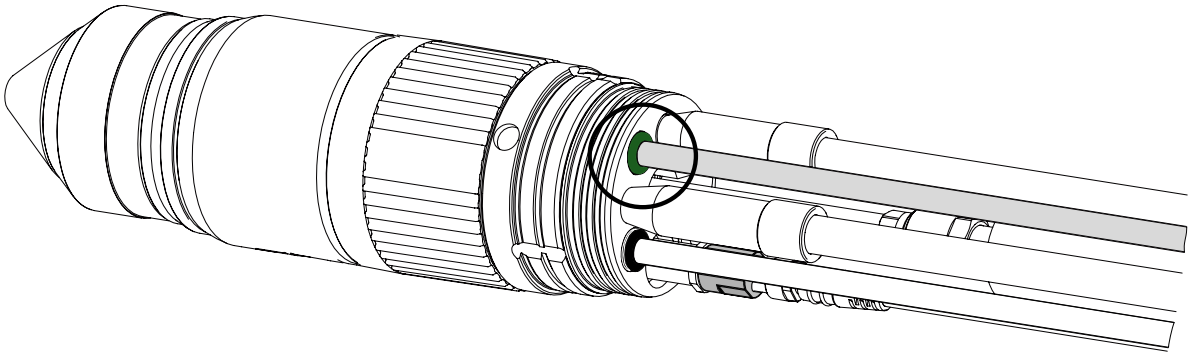

h. Push the shield-gas hose in the connector until it stops, approximately 13 mm (0.5 inch).

   This is a push-to-connect fitting. Make sure the hose is fully inserted and the insertion mark is no longer visible.

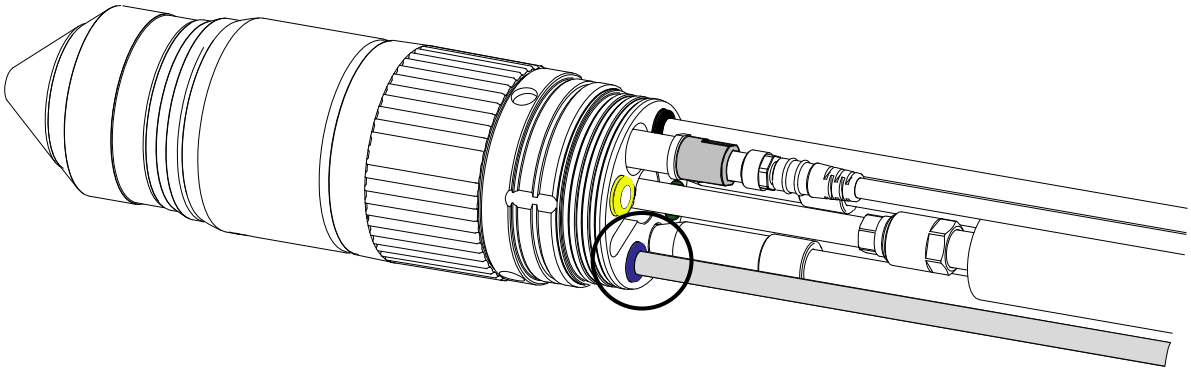

i. Push the Plasma Line B hose in the connector until it stops, approximately 13 mm (0.5 inch) .

   This is a push-to-connect fitting. Make sure the hose is fully inserted and the insertion mark is no longer visible.

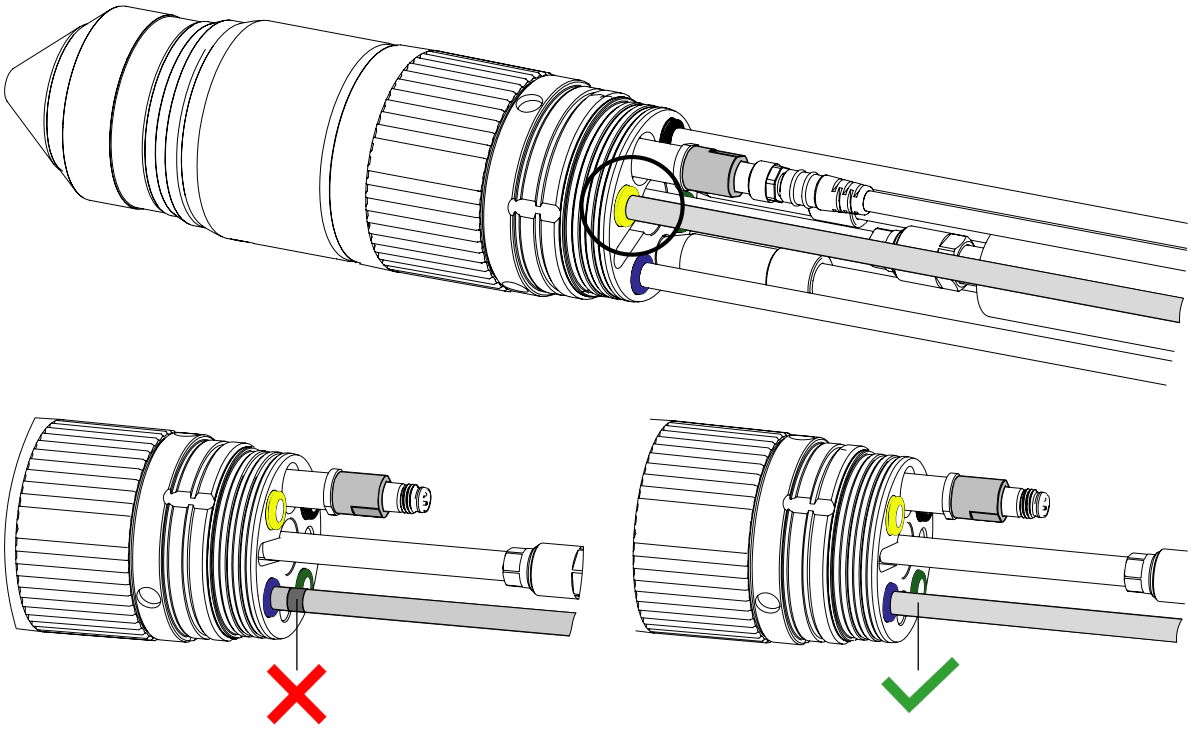

6. Install the torch mounting sleeve:
    a. Use a spanner wrench to hold the torch stable.
    b. Move the torch mounting sleeve in the direction of the torch.
    c. Use your hands to tighten the torch mounting sleeve connection.

    Do **not** overtighten the torch mounting sleeve.

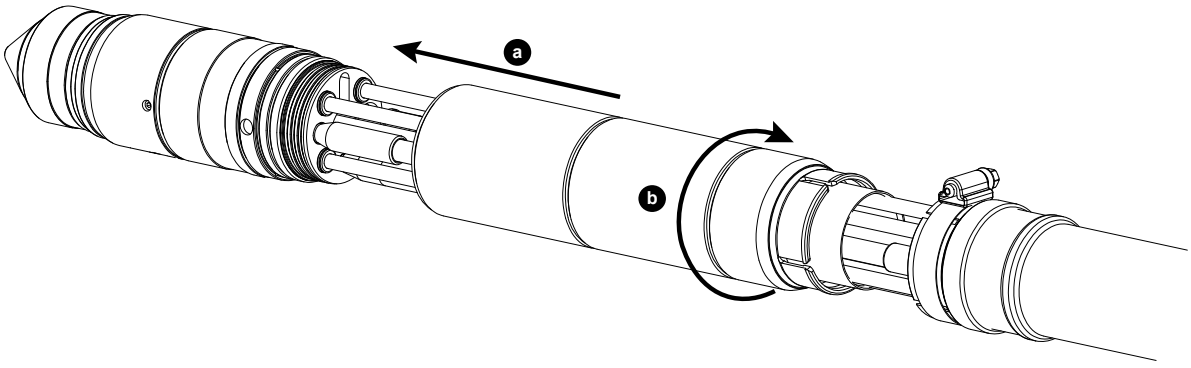

7. Put the collar in the correct position on the torch-end of the torch lead:
    a. Move the collar in the direction of the torch-end of the torch-lead assembly.
    b. Tighten the hose clamp that holds the collar in position.

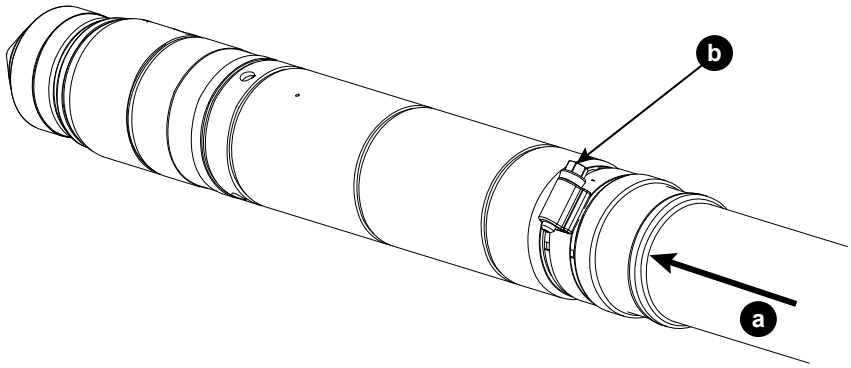

Connect the torch lead to the TorchConnect console

Make sure to use the correct lead lengths for the best cut quality and longest consumable life.

NOTICE

FOR THE BEST CUT QUALITY AND CONSUMABLE LIFE USE THE CORRECT LEAD LENGTHS

Cut quality and the lifespan of consumables will be decreased if you change the lead lengths.

The manufactured lengths of torch and console leads are critical for system performance. Never change the lengths of leads.

Figure 33 - Torch-lead assembly

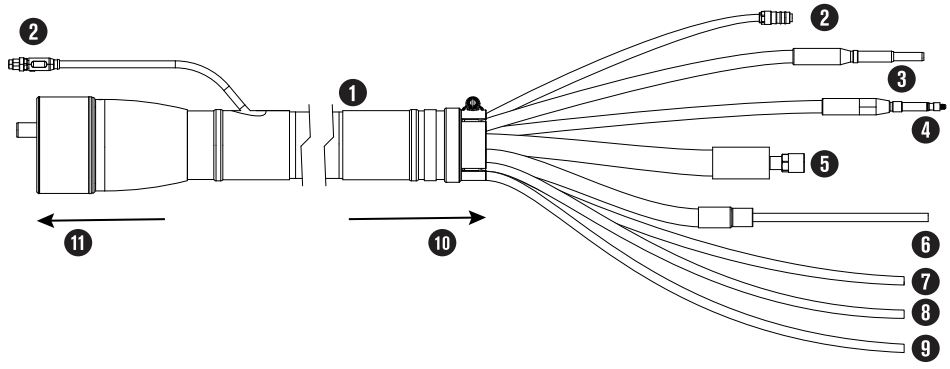

1 Protective sleeve

2 Plasma valve cable

3 Ohmic lead

4 Pilot arc lead

Figure 33 - Torch-lead assembly (continued)

5 Coolant return hose (red)

6 Coolant supply hose (green)

7 Shield gas hose

8 Plasma gas hose A

9 Plasma gas hose B

10 To the torch

11 To the TorchConnect console

The 6 meter (20 feet) lead is compatible only with gas assemblies that are 7.5 meters (24.6 feet) or less. For lengths, refer to Torch leads on page 445.

1. Adjust the EasyConnect™ torch-lead assembly so that the connectors in the torch-lead assembly align with the related receptacles in the TorchConnect console.

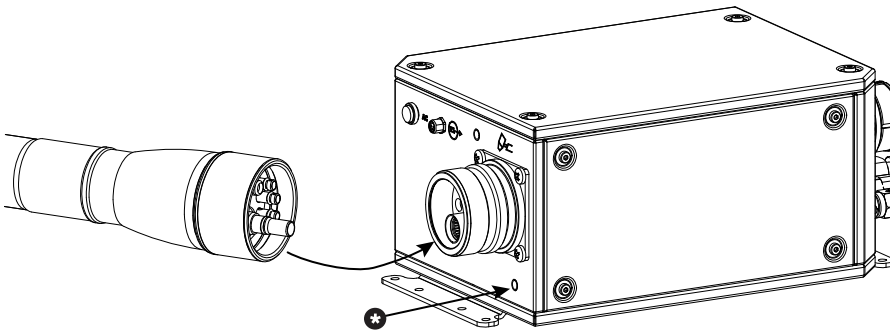

2. **Optional:**

   If you use a third-party ohmic circuit, remove the plug (*) to get access to the ohmic wire.

3. Connect the torch-lead assembly to the TorchConnect console:

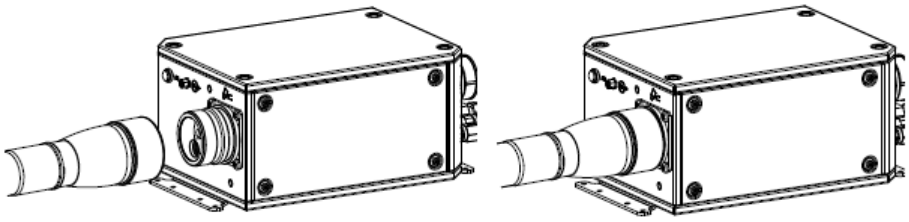

   Use your hands to tighten the coupler on the torch-lead assembly. Do **not** use tools.

4. Connect the plasma valve cable to its connector.

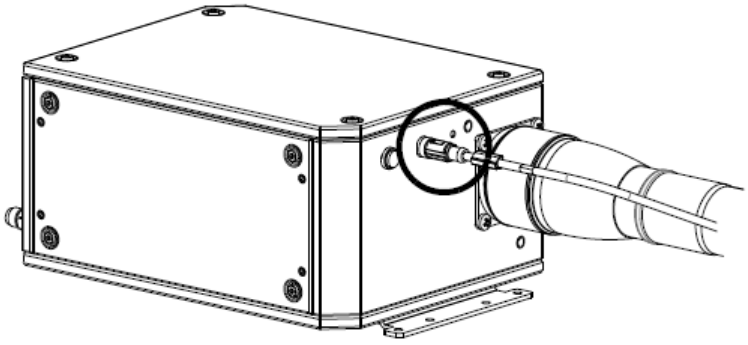

Use your hands to tighten the connector. Do **not** use tools.

Remove the torch and consumable parts

It can be necessary to remove the torch and consumable parts for replacement, maintenance, or troubleshooting.

⚠ WARNING

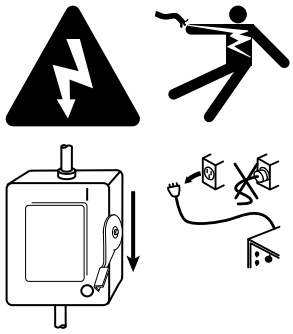

ELECTRIC SHOCK CAN KILL

Disconnect electric power before doing installation or maintenance. The line-disconnect switch must STAY in the OFF position until all of the installation or maintenance steps are complete. Refer to the *Safety and Compliance Manual (80669C)* for more safety information.

⚠ WARNING



HOT PARTS CAN CAUSE SEVERE BURNS

Let the temperature of the plasma power supply decrease before you do any maintenance.

NOTICE

A LOOSE OR OVERTIGHTENED ELECTRODE CAN CAUSE DAMAGE TO THE TORCH

If you do not correctly install and tighten the electrode, torch damage can occur.

A tool is necessary to correctly install and tighten the torch electrode. Do not use your hands. Hypertherm recommends tightening the electrode to a torque value of 2.3 N·m – 2.8 N·m (20 lbf·in – 25 lbf·in).

1. Remove the power from the cutting system:
    a. Set the line-disconnect switch to the OFF position.
    b. Make sure that the power-indicator LED is **not** illuminated on the plasma power supply or other system components.
2. Loosen the torch coupler nut to release the torch from the torch receptacle.

    The torch and consumable parts can be hot. Put on gloves to prevent burns.
3. Put the torch and torch receptacle on a surface that is:
    - ☐ Clean
    - ☐ Dry
    - ☐ Oil-free
4. Remove the consumable parts as shown:
    a. Use your hands to pull and twist off the swirl ring.
    b. Use the consumable-parts tool to turn the electrode counterclockwise.
    c. Hold the tool tightly and pull straight out to correctly remove the electrode.

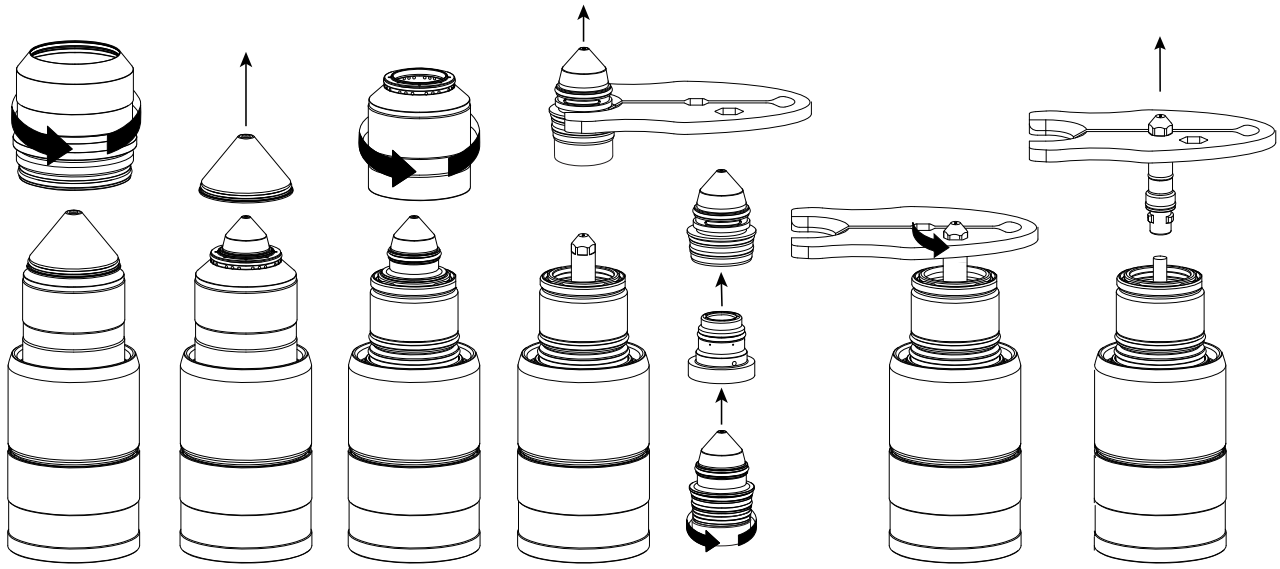

5. Put the consumable parts on a surface that is:

   - ☐ Clean
   - ☐ Dry
   - ☐ Oil-free

Install the torch in the torch receptacle

Make sure that the torch is correctly installed in the torch receptacle.

Figure 34 - Torch receptacle connections

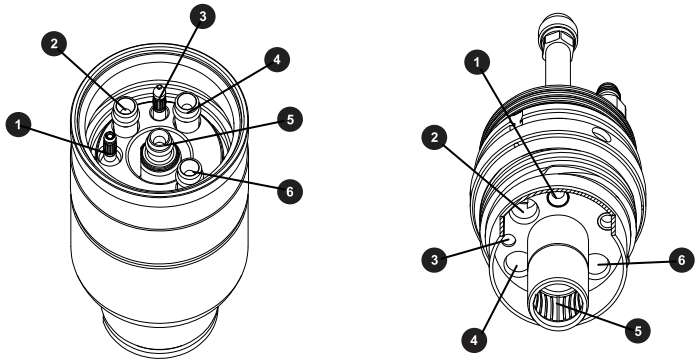

1 Pilot arc

2 Coolant return

3 Ohmic

Figure 34 - Torch receptacle connections (continued)

4 Shield gas

5 Coolant supply

6 Plasma gas

1. Apply a thin layer of silicone lubricant to the four O-rings that are in the torch body.

   Do **not** apply silicone to the brass electrical connectors.

   Make sure that the O-rings are shiny. However, too much lubricant can prevent gas flow. Remove unwanted lubricant if found.

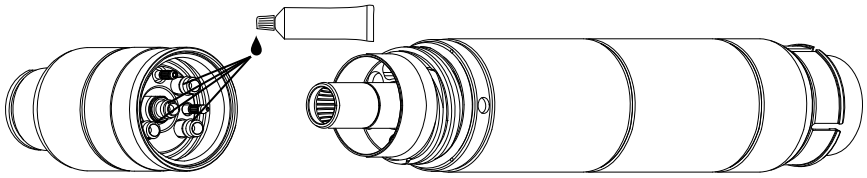

2. Install the torch in the torch receptacle:

   a. Turn the torch body up with light force until you feel the torch body engage into position in the torch receptacle.

   b. Use your hands to tighten the torch-coupler nut until the coupler nut cannot turn.

      Do **not** use tools to tighten the torch-coupler nut.

3. Make sure that the torch body is fully installed in the torch receptacle and that there is no space between the torch body and torch receptacle.

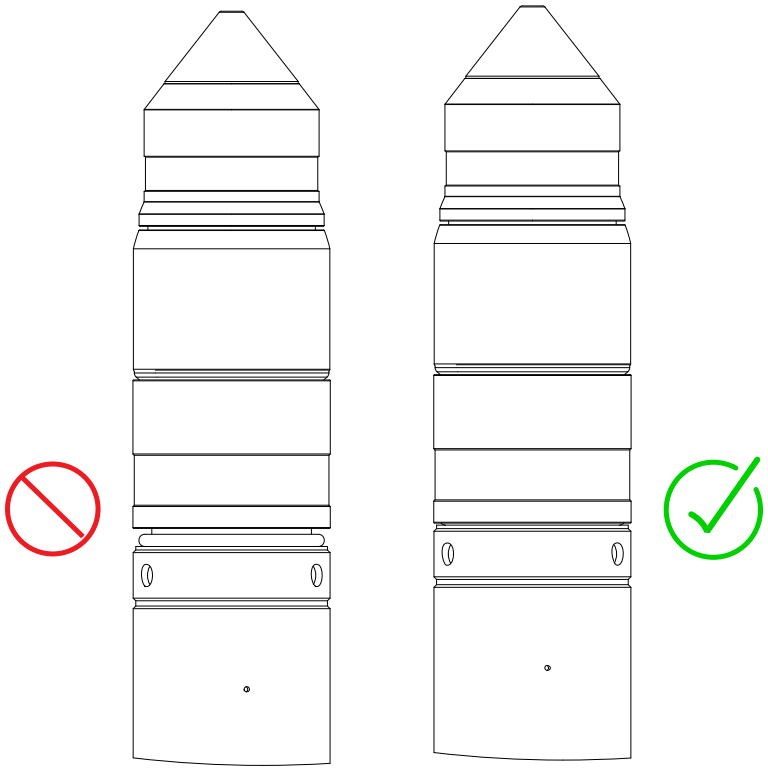

Install the torch in the torch mounting bracket

Install the torch in the torch mounting bracket. Make sure it is level in all directions, then tighten the screws on the bracket.

Before you begin:

- You must connect the torch-lead assembly to the torch receptacle. Refer to Install the torch-lead assembly to the torch receptacle on page 132.
- You must remove the consumables from the torch. Refer to Remove the torch and consumable parts on page 139.
- You must install the torch into the torch receptacle. Refer to Install the torch in the torch receptacle on page 141.
- As the installer or user, you must supply the torch mounting bracket for your cutting system.
  - Select one that complies with the requirements in Torch mounting bracket requirements on page 70.
  - Mounting brackets are available from Hypertherm. Refer to Torch bracket on page 430.
- The XPR torch mounting sleeve is larger than the HPR torch mounting sleeve. Modification or replacement of an HPR mounting sleeve is necessary before you install an XPR torch.

1. Remove the power from the cutting system:
   a. Set the line-disconnect switch to the OFF position.

b. Make sure that the power-indicator LED is **not** illuminated on the plasma power supply or other system components.

2. Install the torch mounting bracket onto the torch lifter.

   Refer to the instruction manual for the torch lifter for information about how to install the torch mounting bracket in the torch lifter.

3. Insert the torch, with the attached torch-lead assembly, into the torch mounting bracket, as shown.

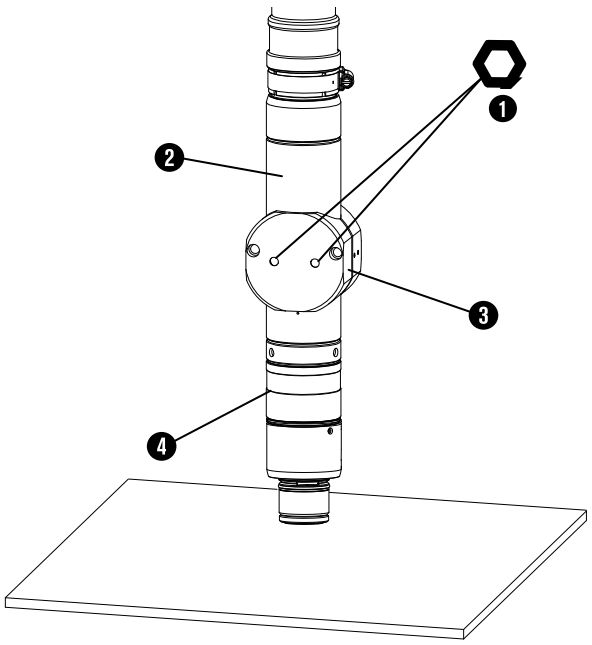

1 1.8 mm (3/16 inch)

2 Lower torch sleeve

3 Torch mounting bracket 5.72 cm (2.25 inches)

4 Torch receptacle

4. Move the torch assembly so that the torch mounting bracket is around the lower part of the torch sleeve and does not touch the torch receptacle.

   Make sure that the torch mounting bracket is as low as possible on the torch sleeve without touching the torch receptacle. This position can keep vibration at the torch tip to a minimum.

5. Make sure that the torch is level (at a 0° angle) in all directions, as shown.

   You can use a digital level to measure alignment for standard-position cutting, marking, and piercing.

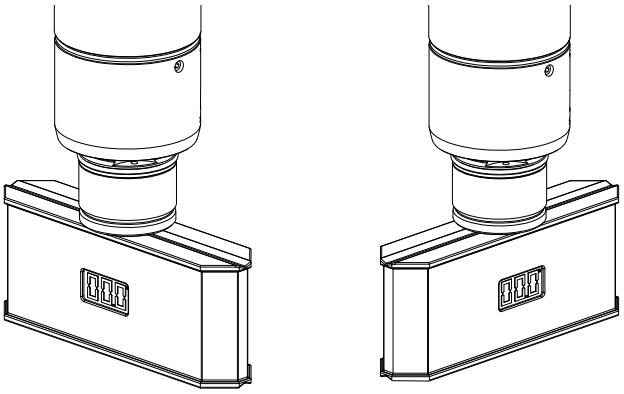

During bevel cutting, the torch is at an angle (not perpendicular) to the workpiece. The torch position for XPR torches can be a range from 0° – 52°.

6. Tighten the screws on the torch mounting bracket.

Install the consumables

Make sure that the consumables are installed correctly on the torch.

NOTICE
A LOOSE OR OVERTIGHTENED ELECTRODE CAN CAUSE DAMAGE TO THE TORCH If you do not correctly install and tighten the electrode, torch damage can occur. A tool is necessary to correctly install and tighten the torch electrode. Do not use your hands. Hypertherm recommends tightening the electrode to a torque value of 2.3 N·m – 2.8 N·m (20 lbf·in – 25 lbf·in).

1. Remove the power from the cutting system:
    a. Set the line-disconnect switch to the OFF position.
    b. Make sure that the power-indicator LED is **not** illuminated on the plasma power supply or other system components.
2. Select the best consumables for your cutting or marking application.
3. Apply a thin layer of silicone lubricant to each O-ring on all consumables.

    Make sure that the O-rings are shiny. However, too much lubricant can prevent gas flow. Remove unwanted lubricant if found.

4. Remove the torch from the torch receptacle.
5. Use a clean, lint-free cloth to clean the internal and external surfaces of the torch.

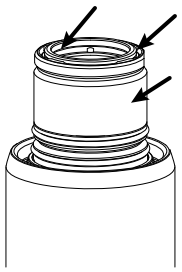

6. Install the consumables on the torch as shown.

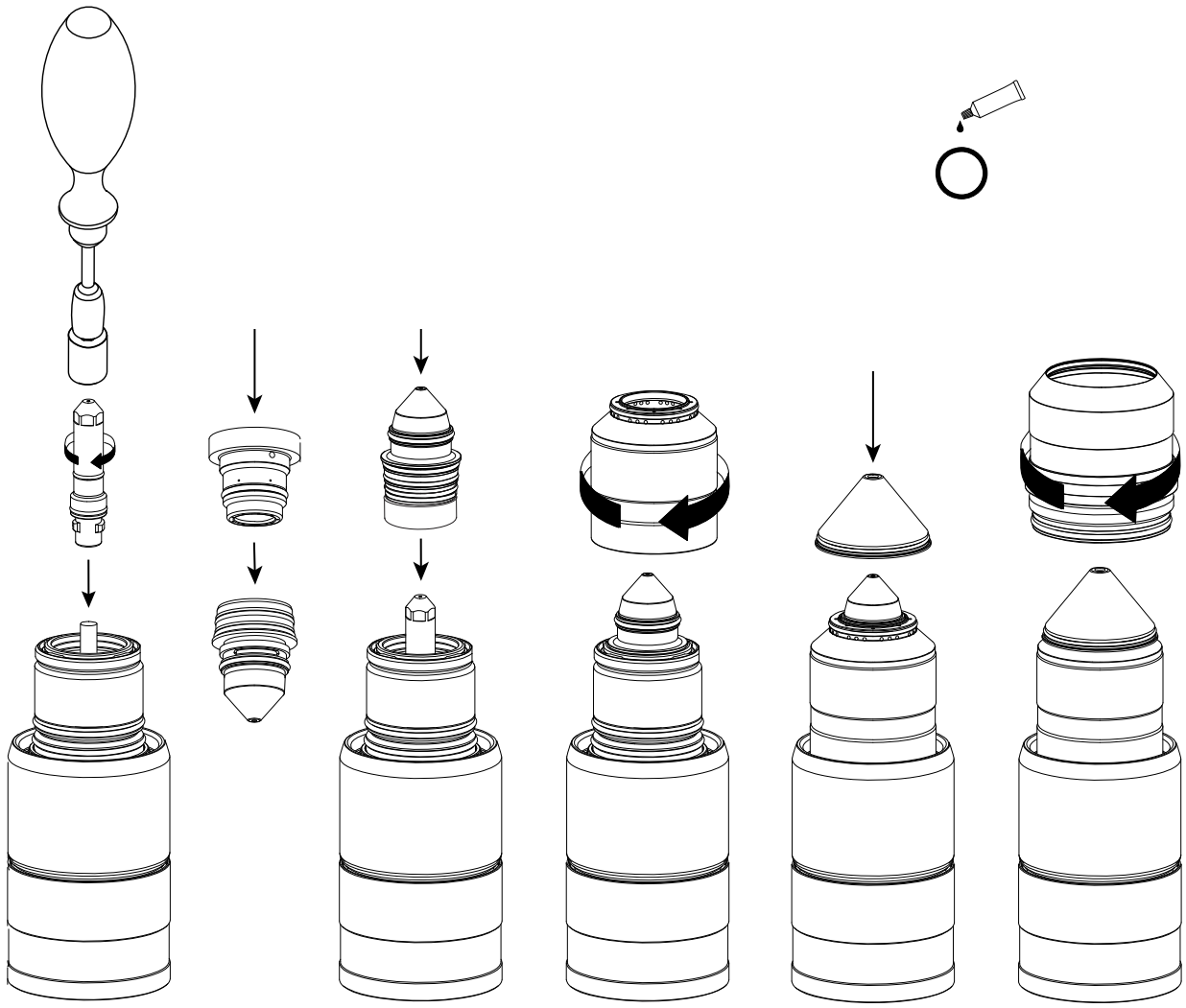

7. Install the torch into the torch receptacle.

   Refer to Install the torch in the torch receptacle on page 141.

Connect electric power to the cutting system

Connect the main power cord to the plasma power supply. Make sure that the line-disconnect switch is in the OFF position. Use the applicable color codes for the main power cord wires.

⚠ WARNING

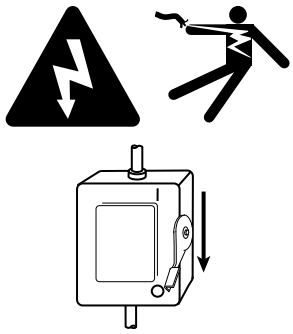

ELECTRIC SHOCK CAN KILL

If the line-disconnect switch is not in the OFF position you can get a serious electric shock. Electric shock can seriously injure or kill you.

The line-disconnect switch must be in the OFF position before you connect the power cord to the cutting system. It must REMAIN in the OFF position until all installation steps are complete. In the United States, use a "lock out/tag out" procedure until installation is complete. In other countries, follow the appropriate national and local safety procedures. Refer to the *Safety and Compliance Manual (80669C)* for more safety information.

You must supply the main power cord for your cutting system. Select one that complies with local codes and all regulations and input power requirements. Refer to General input power requirements on page 44.

The distance of the receptacle from the main box also can have an effect on size requirements for the main power cord. For information about the codes in your location and the requirements for your site, speak with a licensed electrician.

1. Make sure that the line-disconnect switch is in the OFF position and stays in the OFF position until all installation steps are complete.
2. Connect the main power cord to the plasma power supply, as shown.
    a. Connect the ground lead (PE) from the main power cord to the ground terminal of TB1.
    b. Connect the W, V, and U leads from the main power cord to the related TB1 terminals.

Figure 35 - Main power cord wire color and terminal location

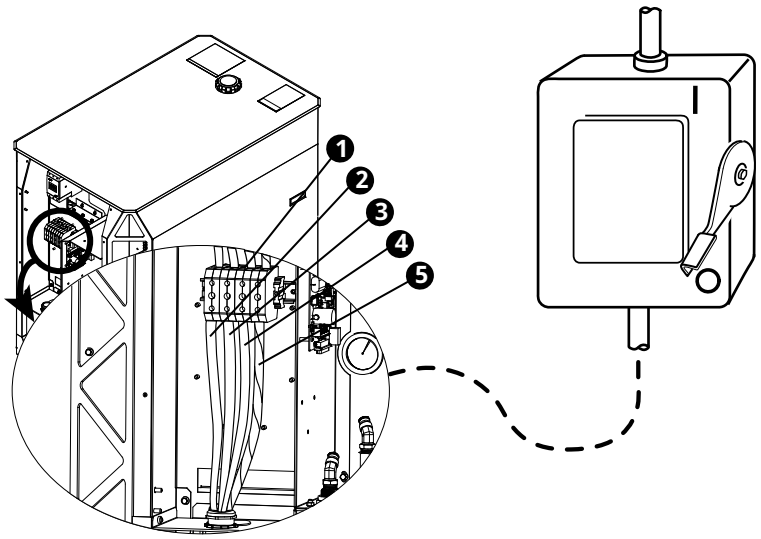

		Wire color codes for North America	Wire color codes for Europe, Asia, and most locations outside of North America
1	TB1 terminal	–	–
2	U	Black	Black
3	V	White	Blue
4	W	Red	Brown
5	GND (PE) (earth ground) ⏚	Green/yellow	Green/yellow

3. Comply with national and local electrical codes to connect the W, V, and U power leads from the main power cord to the line-disconnect switch.

4 Connect for Communication

Communication methods for XPR cutting systems

There are multiple communication methods to fully operate the plasma cutting system.

Choose the communication method that is best for your cutting system:

- **EtherCAT**
  - Use this method with an EtherCAT-compatible controller. Refer to Connect to the plasma power supply with EtherCAT on page 152.
  - If you use EtherCAT, remote on-off must be wired discretely by the cutting system manufacturer.
- **Serial RS-422 and discrete**
  - Use this method with a serial RS-422 and discrete-compatible controller.
  - If you use serial RS-422, you must also use discrete to fully operate the cutting system.
  - Refer to Connect to the plasma power supply with serial RS-422 on page 155.
  - Refer to Connect to the plasma power supply with discrete on page 162.
- **Wireless (XPR web interface through Wi-Fi®) and discrete**
  - Use this method with a wireless-enabled device and discrete-compatible controller.
  - If you use wireless, you must also use discrete to fully operate the cutting system.
  - Refer to Requirements for the XPR web interface on page 173.
  - Refer to Connect to the plasma power supply with discrete on page 162.
- **Ethernet LAN (XPR web interface through Ethernet) and discrete**
  - Use this method with a wired, Ethernet-enabled device and discrete-compatible controller.
  - If you use Ethernet, you must also use discrete to fully operate the cutting system.
  - Refer to Connect to the plasma power supply with Ethernet LAN (wired) on page 194.

Manual-set mode

- Use this method with a discrete-compatible controller or an EtherCAT-compatible controller to store or select a process that can be used again and again over time, or for simple applications when integration with a CNC is not necessary.
- If you use manual-set mode to select a process, the cutting system automatically sets that process every time you supply power to the cutting system.
- When manual-set mode is enabled, the same process ID, operator ID, process offsets, ramp-down error protection, and torch-protection settings for the selected process can be used again and again over time, until you select a different process.
- Refer to Use wireless or Ethernet LAN to enable or disable manual-set mode on page 204.
- Refer to Process selection on page 237.
- Refer to Use EtherCAT or serial RS-422 to enable or disable manual-set mode on page 205.

For information about signals and protocols, refer to the *CNC Communication Protocol for the XPR Cutting System (10085793)*.

Table 24 - Communication requirements and options

Set process with... [1]	To fully operate the cutting system...	Monitor with...			
	Discrete	**EtherCAT**	**Wireless (XPR web interface through Wi-Fi)**	**RS-422**	**Ethernet LAN (XPR web interface through Ethernet LAN)**
EtherCAT	Required for remote on-off [2]	**Preferred**	Alternative	Alternative	Alternative
Wireless (XPR web interface through Wi-Fi)	Required	Alternative	**Preferred**	Alternative	Alternative
RS-422	Required	Alternative	Alternative	**Preferred**	Alternative
Ethernet LAN (XPR web interface through Ethernet), including manual-set mode	Required	Alternative	Alternative	Alternative	**Preferred**

1 **The device that first sets a process controls the plasma power supply.** If the manual-set mode is active, the cutting system automatically uses the settings for the last-selected process. For information about how to change the device that has control of the plasma power supply, refer to Change the device that has control on page 206.

2 Discrete inputs are ignored when a process ID is set over EtherCAT to a cutting system that uses the factory-default configuration. Speak to your cutting machine supplier or regional Hypertherm Technical Service team.

Example

If you use EtherCAT to set the process, the preferred method to monitor is EtherCAT. However, you can use serial RS-422 or the XPR web interface through Wi-Fi or Ethernet LAN to monitor.

Requirements for EtherCAT

This information prepares you to connect the plasma power supply to the CNC with EtherCAT cables.

- For an example of a system diagram, refer to EtherCAT multi-drop (multi-system) interface (Sheet 17 of 23) on page 489.
- For information about signals and protocols, refer to *EtherCAT communications* and *Serial RS-422 and EtherCAT commands* in the *CNC Communication Protocol for the XPR Cutting System (10085793)*.
- Hypertherm sells EtherCAT cables that have been tested with our cutting system. Refer to EtherCAT and Ethernet LAN interface cables on page 441.
- If you supply your own cables, choose EtherCAT cables that follow the Beckhoff® specification. Refer to Requirements for EtherCAT and Ethernet LAN cables on page 151.
- To help prevent problems from EMI, make sure that the EtherCAT cables:
  - Have separation from the pilot arc cable, negative cable, or any power cables that have a voltage more than 120 VAC. Refer to Distance requirements between high-frequency cables and control cables on page 68.
  - Are not near the gas connect console or TorchConnect console.
- Hypertherm recommends a minimum distance of one meter (3.3 feet) between the plasma power supply and other system components, or between the plasma power supply and an obstacle.

Figure 36 - EtherCAT cable

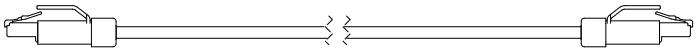

Requirements for EtherCAT and Ethernet LAN cables

Use this table to identify the specification requirements for EtherCAT and Ethernet LAN interface cables.

If you supply your own cables, choose EtherCAT and Ethernet LAN cables that obey the Beckhoff specification.

Table 25 - EtherCAT and Ethernet LAN cable specifications

Cable element	Specification
Type	Cat5e, 4-wire, 2-pair, double-shielded (overall foil and braid shield)
Wire	▪ Construction: Stranded tinned wire ▪ Diameter: 0.75 mm (7 X 0.25 mm), 22 AWG ▪ Insulation: Polyethylene, 1.5 mm (0.06 inch) diameter
Core	▪ Construction: Filler as central element ▪ Layer 1: 4-wire, 2-pair in star-quad configuration ▪ Sequence of colors: White, yellow, blue, orange ▪ Layer 2: Plastic tape overlapped ▪ Inner jacket: Thermoplastic copolymer, 3.9 mm (0.04 inch) diameter ▪ Aluminum laminated foil overlapped ▪ Shield: Braided, tinned copper wires, 0.13 mm (0.005 inch) diameter, coverage approximately 85%, 4.7 mm (0.19 inch) diameter
Jacket	▪ Material: Polyurethane ▪ Wall thickness: 0.9 mm (0.04 inch) ▪ Outer diameter: 6.5 mm (0.26 inch) ± 0.2 mm (0.008 inch)
Maximum length for EtherCAT cables	75 m (246 ft)
Maximum length for Ethernet LAN cables	75 m (246 ft)

Connect to the plasma power supply with EtherCAT

1. Remove the rear panel of the plasma power supply.

   Refer to Remove external panels from the system components on page 99.

2. Connect the EtherCAT cables to the plasma power supply and to the CNC as shown.
3. Install the rear panel of the plasma power supply.

Figure 37 - Connect EtherCAT cables to the plasma power supply

Figure 37 - Connect EtherCAT cables to the plasma power supply (continued)

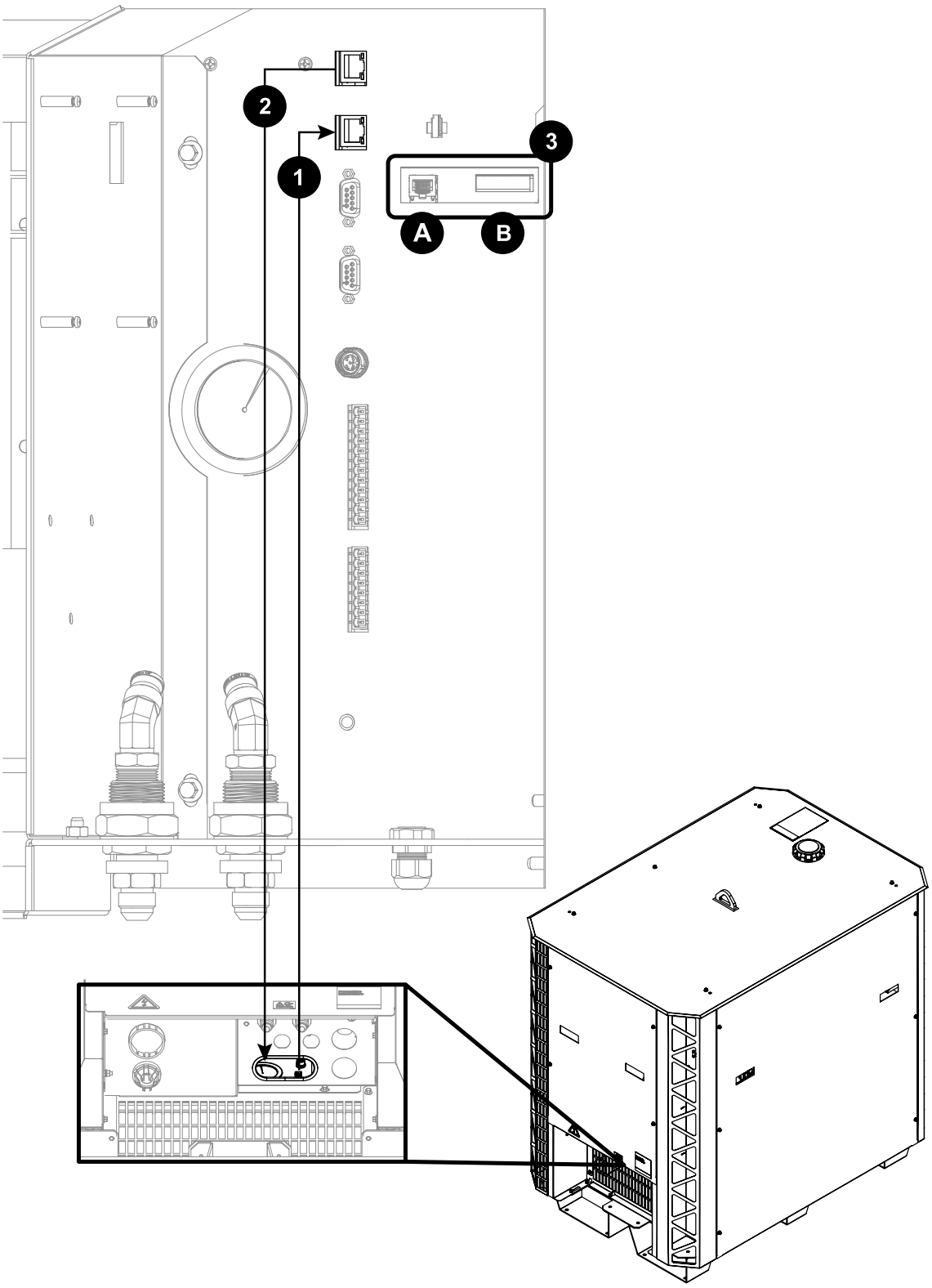

1 EtherCAT in from the CNC. [1]

Figure 37 - Connect EtherCAT cables to the plasma power supply (continued)

2 EtherCAT out to the next plasma power supply, if necessary. [1]

3A Ethernet LAN port

3B Expansion PCB connectors: Necessary for redundant remote on-off feature, alternate 24 VDC power input, and analog estimated arc voltage output.

1 Refer to the label on the rear of your plasma power supply.

Requirements for serial RS-422

This information prepares you to connect the plasma power supply to the CNC with serial RS-422 cables.

- For an example of a system diagram, refer to Serial RS-422 and discrete multi-drop (multi-system) interface (Sheet 18 of 23) on page 490.
- For serial RS-422 multi-drop (multi-system) addressing, refer to *XPR serial RS-422 multi-drop (multi-system) addressing* in the *CNC Communication Protocol for the XPR Cutting System (10085793)*.
- For information about signals and protocols, refer to *XPR serial RS-422 communications* and *Serial RS-422 and EtherCAT commands* in the *CNC Communication Protocol for the XPR Cutting System (10085793)*.
- To use Arc Voltage Control (AVC) with a serial RS-422 cutting system, connect to pin 5 and pin 6 of J4 on the expansion PCB to access the estimated arc voltage. For information about how to configure the arc voltage output scale and offset through serial RS-422, EtherCAT, or XPR web interface through Wi-Fi, refer to the *CNC Communication Protocol for the XPR Cutting System (10085793)*.
- For cable pinout details, refer to Pinouts for serial RS-422 interface cables on page 155.
- For cable lengths, refer to Serial CNC interface cables on page 443.
- Hypertherm recommends a minimum distance of one meter (3.3 feet) between the plasma power supply and other system components, or between the plasma power supply and an obstacle.

Figure 38 - Serial RS-422 cable

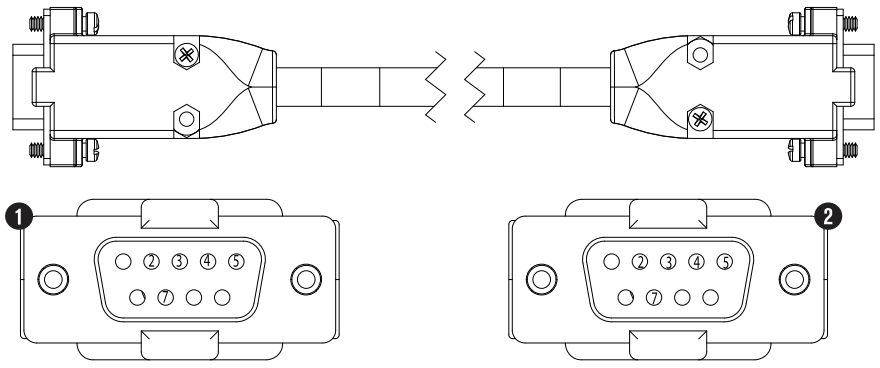

Figure 38 - Serial RS-422 cable (continued)

1 End A (male) to the plasma power supply (top serial connector, J12)

2 End B (male) to the CNC

Pinouts for serial RS-422 interface cables

Use this table to identify the signals, pin numbers, and wire colors in interface cables with serial RS-422 connectors.

Table 26 - Pinout for serial RS-422 interface cable

End A		Wire color	End B		Wire type
To the plasma power supply			To the CNC		
Signal	Pin number		Pin number	Signal	
TxD +	4	Red	7	RxD +	Pair
TxD -	2	Black	3	RxD -	
RxD +	7	White	4	TxD +	Pair
RxD -	3	Black	2	TxD -	
GND	5	Green	5	GND	Pair
–	Cut	Black	Cut	–	

Connect to the plasma power supply with serial RS-422

The serial RS-422 cable connects the plasma power supply to other components for data transfer.

Before you begin: Pinouts for serial RS-422 interface cables on page 155

1. Remove the rear panel of the plasma power supply.

   Refer to Remove external panels from the system components on page 99.

2. Put End A of the serial RS-422 cable through the hole in the bottom of the rear compartment in the plasma power supply.

3. Connect End A of the serial RS-422 cable to the correct connector on the control PCB in the plasma power supply:

   - For cutting systems with multiple plasma power supplies, use the top connector (J12) for the CNC. Use the bottom connector (J13) to connect to the next plasma power supply.

- For cutting systems with one plasma power supply, you can use either connector to connect to the CNC.

4. Connect End B of the cable to the CNC.
5. If you want to operate the cutting system, continue with the next step.

   If you want to only monitor with serial RS-422, you are done.
6. Connect to the plasma power supply with discrete on page 162.
7. Install the rear panel of the plasma power supply.

Figure 39 - Connect the serial RS-422 cable to the plasma power supply

Figure 39 - Connect the serial RS-422 cable to the plasma power supply (continued)

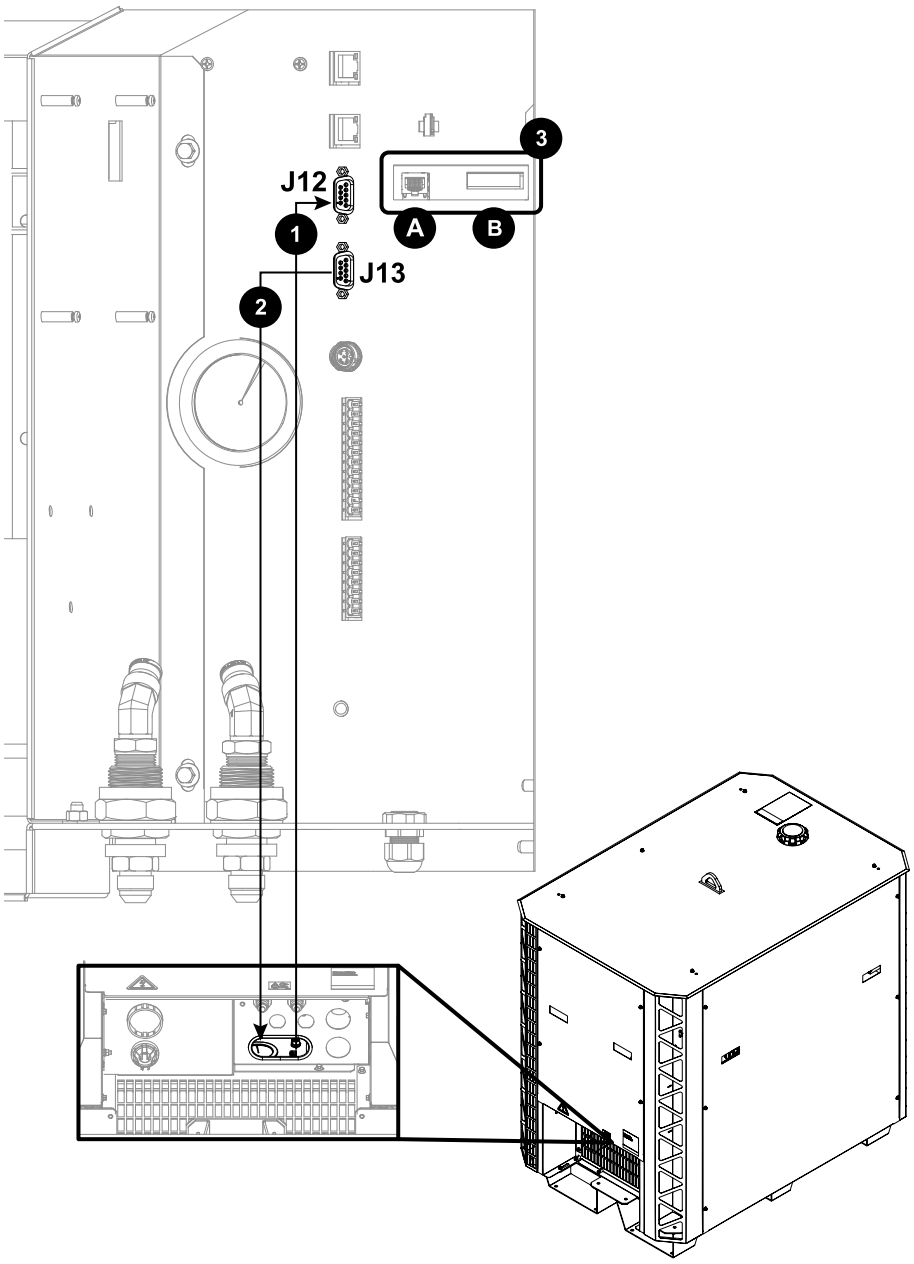

1 Serial RS-422 in from the CNC

2 Serial RS-422 out to the next plasma power supply (if necessary)

3A Ethernet LAN port

3B Expansion PCB connectors: Necessary for redundant remote on-off feature, alternate 24 VDC power input, and analog estimated arc voltage output.

Requirements for discrete

This information prepares you to connect the plasma power supply to the CNC with discrete cables.

- You can use serial RS-422 or the XPR web interface through Wi-Fi or Ethernet LAN with discrete to operate the cutting system.
- To use AVC with a serial RS-422 cutting system, connect to pin 5 and pin 6 of J4 on the expansion PCB to get access to the estimated arc voltage. For information about how to configure the arc voltage output scale and offset through serial or EtherCAT, refer to the *CNC Communication Protocol for the XPR Cutting System (10085793)*.
- For an example of a system diagram, refer to Discrete multi-drop (multi-system) interface (Sheet 19 of 23) on page 491.
- For information about signals and protocols, refer to *XPR discrete communication* in the *CNC Communication Protocol for the XPR Cutting System (10085793)*.
- For cable lengths, refer to Discrete interface cables on page 442.
- Hypertherm recommends a minimum distance of one meter (3.3 feet) between the plasma power supply and other system components, or between the plasma power supply and an obstacle.

Figure 40 - Discrete cable

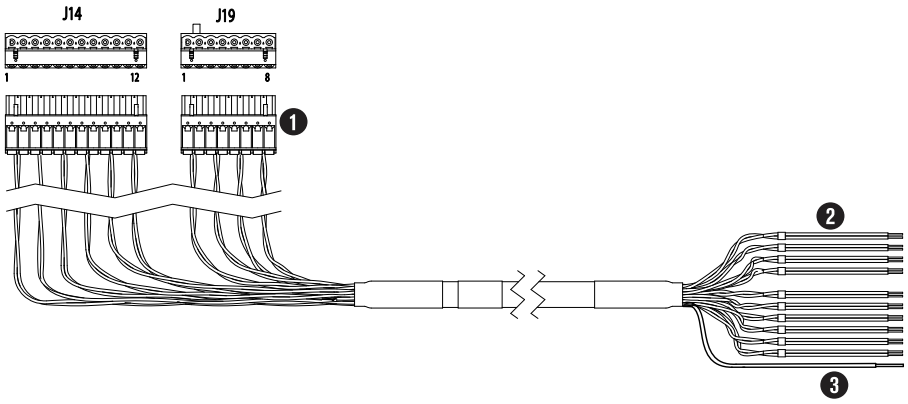

1 End A to the plasma power supply

2 End B to the CNC

3 Shield wire

Figure 41 - Discrete cable for the expansion PCB

Figure 41 - Discrete cable for the expansion PCB (continued)

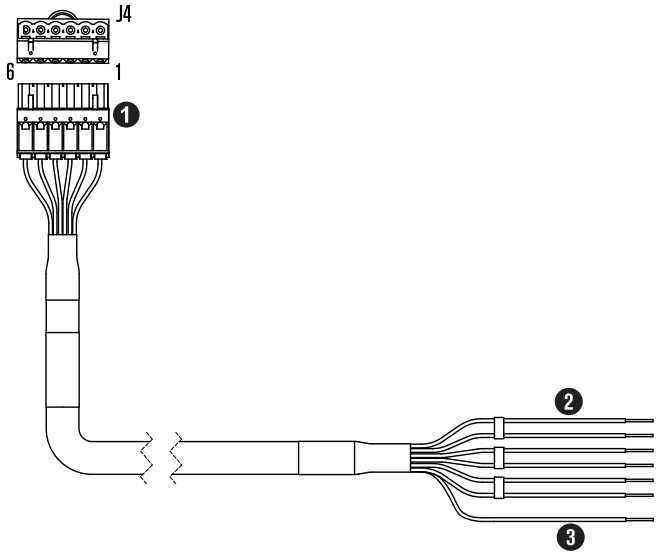

1 End A to the plasma power supply

2 End B to the CNC

3 Shield wire

Pinouts for the discrete interface cables

Use these tables to identify the signals, pin numbers, and wire colors in interface cables with discrete connectors.

Table 27 - Pinout for J14 on the discrete cable

To the plasma power supply				
J14 pin	**Input/ output**	**Signal**	**Function**	**Wire color**
1	Input [1, 2]	Remote on/off +	When the input is open, the power to the plasma power supply, the consoles, and the contactors is disabled.	Red
2		Remote on/off -		Black
3	Input [3]	Plasma start +	The CNC starts preflow. If the hold input is not active, the CNC continues with the plasma arc. The plasma power supply stays in preflow for up to 30 seconds while the hold input stays active.	White
4		Plasma start -		Black

Table 27 - Pinout for J14 on the discrete cable (continued)

To the plasma power supply				
J14 pin	**Input/ output**	**Signal**	**Function**	**Wire color**
5	Output [3]	Motion +	Tells the CNC that an arc transfer has occurred and to begin machine motion after the CNC pierce delay time.	Green
6		Motion -		Black
7	Input [1], [4]	Hold +	The CNC delays plasma arc start. This signal is usually used in combination with the Start signals to synchronize multiple torches. Start this signal at the same time as the Plasma Start signal. Stop this signal to fire the torch.	Blue
8		Hold -		Black
9	Input [1]	Shield pierceflow +	The CNC tells the plasma system to continue the shield preflow until after the pierce-delay time. Start this signal at the same time as the Plasma Start signal. Stop this signal when the pierce time is complete.	Yellow
10		Shield pierceflow -		Black
11	Output [5]	F+24V CNC	Available 24 VDC (200 mA maximum)	Brown
12		F PWRGND	Ground	Black
		Shield	Overall shielding of the wires. The shield wire is connected to the CNC chassis ground.	Bare wire

1 Inputs are optically isolated. It is necessary to supply them with 24 VDC at 12.5 mA or dry-contact closure at 8 mA.

2 If J27 of the main control PCB has a jumper between pin 2 and pin 3, refer to Pinouts for the discrete cable for the expansion PCB on page 161, Install a redundant remote on-off switch on page 215, and Examples of output circuits on page 210.

3 Outputs are optically isolated, open-collector transistors. The maximum rating is 24 VDC at 10 mA.

4 Although the plasma power supply has output capability, it is usually used only as an input.

5 CNC +24 VDC provides 24 VDC at 200 mA maximum. A jumper is necessary on J17 to use 24 V power.

Table 28 - Pinout for J19 on the discrete cable

To the plasma power supply				
J19 pin	**Input/ output**	**Signal**	**Function**	**Wire color**
1	Output [1]	Error +	Tells the CNC that an alert, error, or failure has occurred. This signal is not intended to be used to stop table motion.	Orange
2		Error -		Black
3		Ready for start +	Tells the CNC that the plasma power supply is ready for the plasma start.	White
4		Ready for start -		Red
7	Output [2]	Shield ohmic contact +	Refer to the footnotes for additional information.	Blue
8		Shield ohmic contact -		Red
		Shield	Overall shielding of the wires. The shield wire is connected to the CNC chassis ground.	Bare wire

1 Outputs are optically isolated, open-collector transistors. The maximum rating is 24 VDC at 10 mA.

2 Shield ohmic contact is used as an input into an ohmic contact circuit (with either the XPR internal circuit or a customer-supplied circuit) to sense when the torch shield has touched the workpiece. Refer to Use ohmic contact sense on page 206.

Pinouts for the discrete cable for the expansion PCB

Use this table to identify the signals, pin numbers, and wire colors in the interface cable with discrete connectors for the expansion PCB.

Table 29 - Pinouts for the discrete cable for the expansion PCB

End A				
Pin number	**Input/ output**	**Signal**	**Function**	**Wire color**
1	Input	ALT 24 VDC + (+24 VDC) [1]	Externally supplied 24 VDC lets communications for the control PCB and fieldbus continue when three-phase power is OFF.	Red
2	Input	ALT 24 VDC - (GND) [1]		Black
3	Input	R_RMT_ON-OFF + (24 VDC) [2]	Both signals are necessary for the plasma power supply to work with the redundant remote on-off feature.	White
4	Input	R_RMT_ON-OFF - (RTN) [2]		Black

Table 29 - Pinouts for the discrete cable for the expansion PCB (continued)

End A				
Pin number	**Input/ output**	**Signal**	**Function**	**Wire color**
5	Output	Output estimated arc voltage OUT + (0 V – 10 V) [3]	Estimated arc voltage output (0 VDC - 10 VDC) is available for torch-height controllers to work.	Green
6	Output	Output estimated arc voltage OUT - (GND) [3]		Black
		Shield	Overall shielding of the wires. The shield wire is connected to the CNC chassis ground.	Bare wire

1 A 24 VDC (500 mA) and return (GND) from the CNC or controlling device to the expansion PCB are necessary for the alternate 24 VDC to work.

2 A 24 VDC (50 mA) and return (GND) from the CNC or controlling device to the expansion PCB are necessary for the redundant remote on-off to the main control PCB to work. Hypertherm recommends the use of a separate cable between the remote on-off input and main control PCB.

3 Estimated arc voltage analog output (0 V – 10 V). The default ratio is 30:1. For information about how to use the XPR web interface to change the voltage ratio and offset, refer to Use the XPR web interface to change the arc-voltage output scale on page 164. For information about how to use serial RS-422 or EtherCAT to change the voltage ratio and offset, refer to the *CNC Communication Protocol for the XPR Cutting System (10085793)*.

Connect to the plasma power supply with discrete

Do these steps to connect the plasma power supply to the CNC with discrete cables.

Before you begin: Pinouts for the discrete interface cables on page 159

1. Remove the rear panel of the plasma power supply.

   Refer to Remove external panels from the system components on page 99.

2. Put End A of the discrete cable through the hole in the bottom of the rear compartment in the plasma power supply.
3. Connect J14 and J19 to their respective connectors on the control PCB in the plasma power supply.
4. Connect End B of the discrete cable to the CNC.
5. Make sure that the shield wire that connects End B of the discrete cable to the CNC chassis ground is correctly installed.
6. Put End A of the discrete cable for the expansion PCB through the hole in the bottom of the rear compartment of the plasma power supply.

7. Connect End A of the discrete cable for the expansion PCB to the J4 connector on the expansion PCB.
8. Connect End B of the discrete cable for the expansion PCB to the CNC chassis ground.
9. Make sure the shield wire that connects End B of the discrete cable for the expansion PCB to the CNC chassis is correctly installed.
10. Install the rear panel of the plasma power supply.

Figure 42 - Connect the discrete cable to the plasma power supply

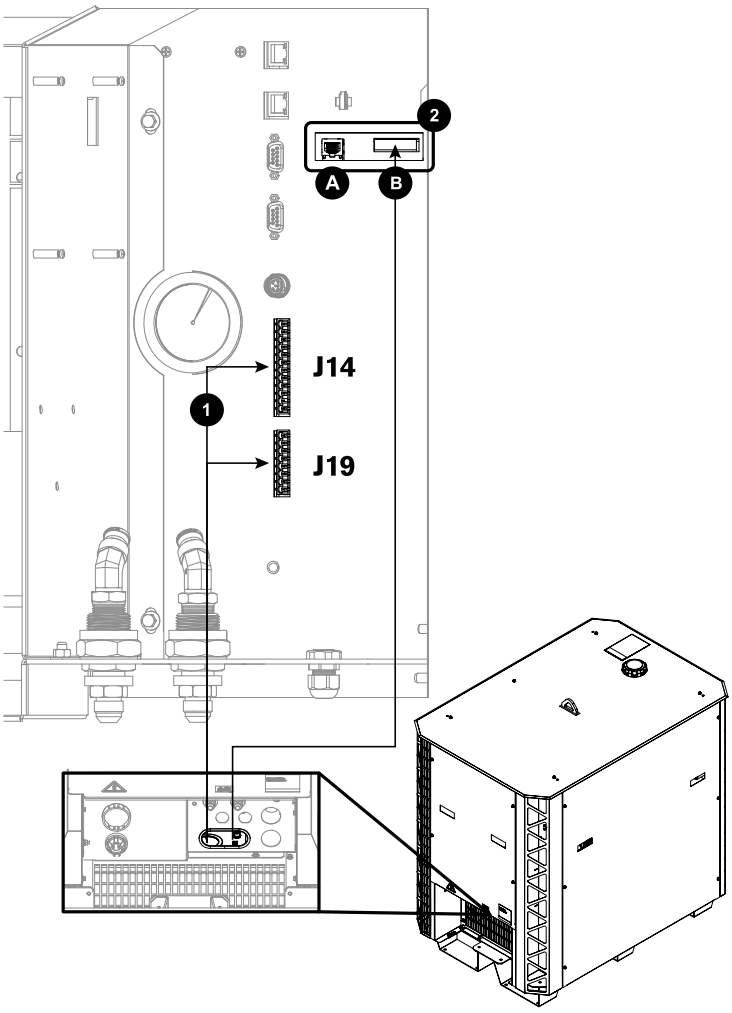

1 Discrete cables in from the CNC

2A Ethernet LAN port

2B Expansion PCB connectors: Necessary for redundant remote on-off feature, alternate 24 VDC power input, and analog estimated arc voltage output.

Alternate 24 VDC input

An externally supplied, alternate source of 24 VDC (500 mA) input to the main control PCB lets communications for the main control PCB and fieldbus continue if three-phase power is removed from the cutting system.

If alternate 24 VDC (500 mA) input is supplied to the main control PCB, it is **not** necessary to start the fieldbus again each time three-phase power is removed.

Use the XPR web interface to change the arc-voltage output scale

Use these steps to change the voltage ratio and offset through the XPR web interface.

Before you begin: You must have a computer-based device with a screen, a web browser that has support for the latest web standards, and wireless access or Ethernet LAN access through the XPR web interface.

1. Connect to the XPR web interface:

If your plasma power supply connects to the network through Wi-Fi...	Do the procedure in Use AP mode to connect (wireless) on page 175.
If your plasma power supply connects to the network through an Ethernet LAN cable...	Do the procedure in Use Ethernet LAN to get access to the XPR web interface on page 202.

2. Go to the **Other** screen.

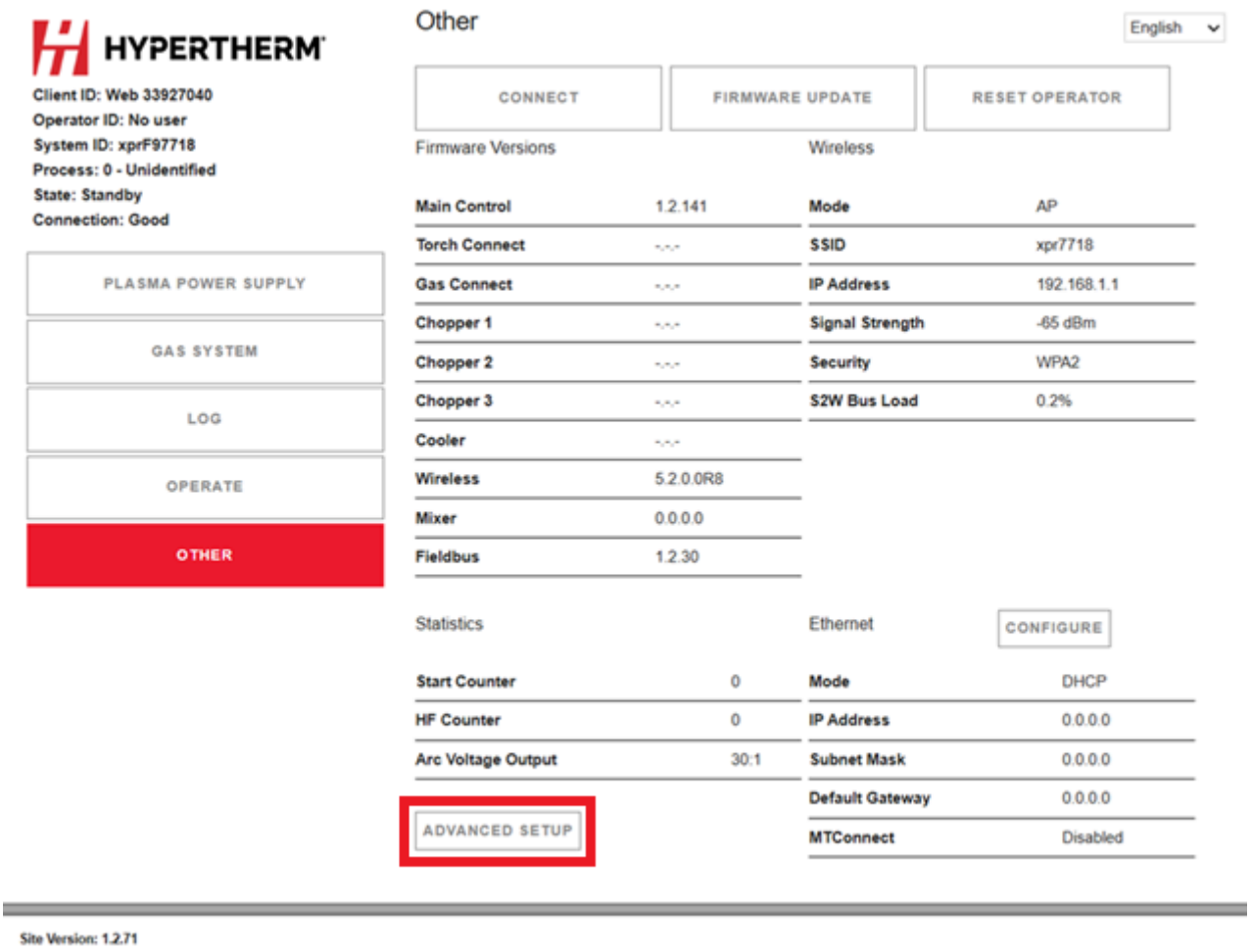

3. Choose **ADVANCED SETUP** to get access to the **Arc Voltage Output Configuration** menu.
4. Use the dropdown menu near **Scale** to choose the arc voltage scale you want.

   The default arc voltage scale is 30:1.
5. If necessary, enter a new or different offset value in the field near **Offset (V)**.

   The default value is 0. Values between -100 and 100 are correct. It is not necessary to enter a value.

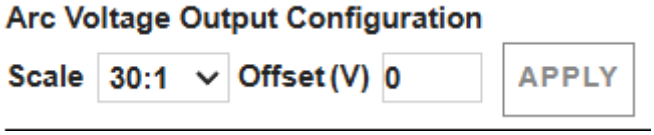

6. Choose **APPLY**.

VDC3 PCB installation for AVC with RS-422 and discrete-only connections (if applicable)

The VDC3 PCB installation instructions are for AVC with serial RS-422 and discrete-only connections.

⚠ WARNING

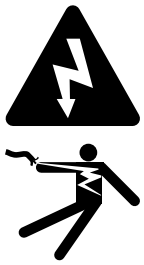

ELECTRIC SHOCK CAN KILL

The plasma power supply contains dangerous electric voltages that can seriously injure or kill you. Even if the plasma power supply is turned OFF, you can still get a serious electric shock if the plasma power supply remains connected to an electric power source.

Use extreme caution if you do diagnosis or maintenance tasks when the plasma power supply remains connected to an electric power source and the outer cover or panels are removed. All work that requires removal of the plasma power supply outer cover or panels must be done by a qualified technician. Refer to the *Safety and Compliance Manual (80669C)* for more safety information.

NOTICE

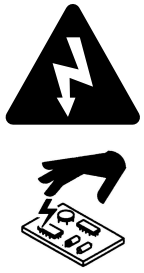

STATIC ELECTRICITY CAN DAMAGE PRINTED CIRCUIT BOARDS

Use precautions when handling printed circuit boards (PCBs) to protect them from static electricity. Correct PCB handling includes the following steps:

- Store PCBs in anti-static containers.
- Wear a grounded wrist strap when handling PCBs.

Diagram of PCB, cable, and wire connections (if applicable)

Refer to the figures for an overview of the VDC3 PCB, cable, and wire connections in the plasma power supply.

The wire harness that connects the VDC3 PCB is held by a clip in the plasma power supply. The wiring harness includes the arc voltage wires and the power wires.

VDC3 PCB connections

Figure 43 - VDC3 PCB connections in the plasma power supply

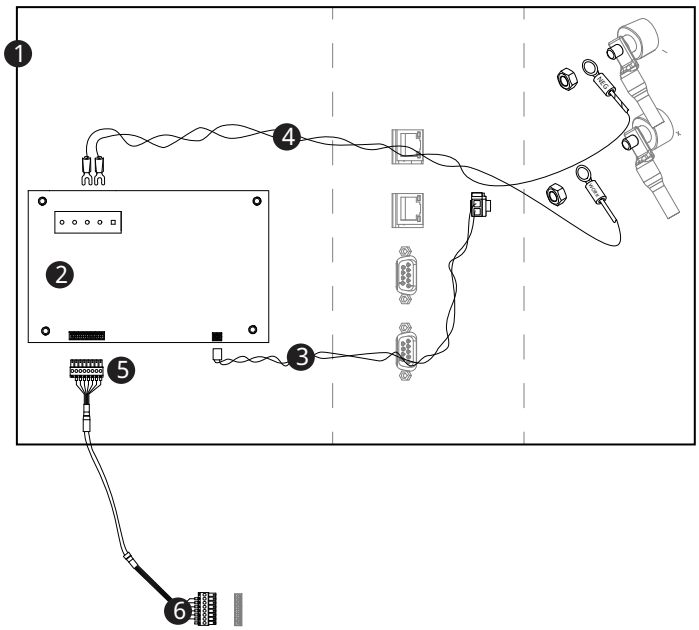

1 Plasma power supply

2 PCB: VDC3 (141511)

3 Wire harness in the plasma power supply: VDC3 PCB 120 VAC

4 Wire harness in the plasma power supply: Arc voltage

5 Male connector to VDC3 PCB (preinstalled on the VDC3 PCB)

6 Cable and connector to the CNC (customer supplied)

Part numbers are shown for parts included in the kit.

VDC3 PCB details

Figure 44 - VDC3 PCB

Figure 44 - VDC3 PCB (continued)

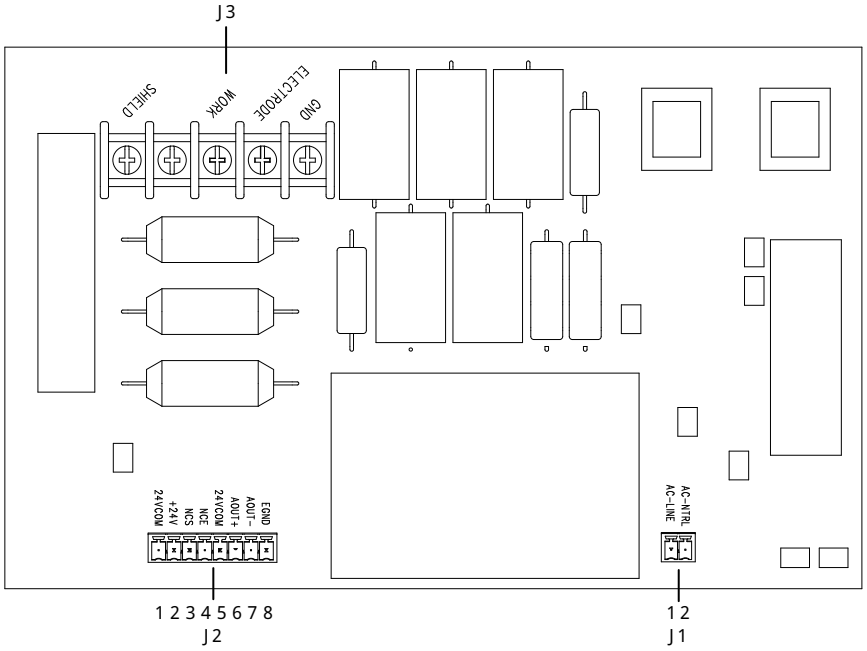

J1 120 VAC wires connector

J2 VDC3 PCB cable connector

J3 Arc voltage wires connector

Table 30 - Pinout for J2 on the VDC3 PCB

Pin number	Signal
1	Not connected
2	+24 VDC (out)
3	Nozzle contact sense (output)
4	Nozzle contact enable (input)
5	24 VDC common
6	+ Analog out (40:1)
7	- Analog out (analog common)
8	EMI chassis ground (cable shield)

Install the VDC3 PCB (141511) (if applicable)

Use these steps to install the VDC3 PCB in the plasma power supply. A 10 mm hex socket wrench or nut driver and a Phillips® #2 screwdriver are required.

1. Use a 10 mm hex socket wrench or nut driver to remove the rear panel of the plasma power supply.

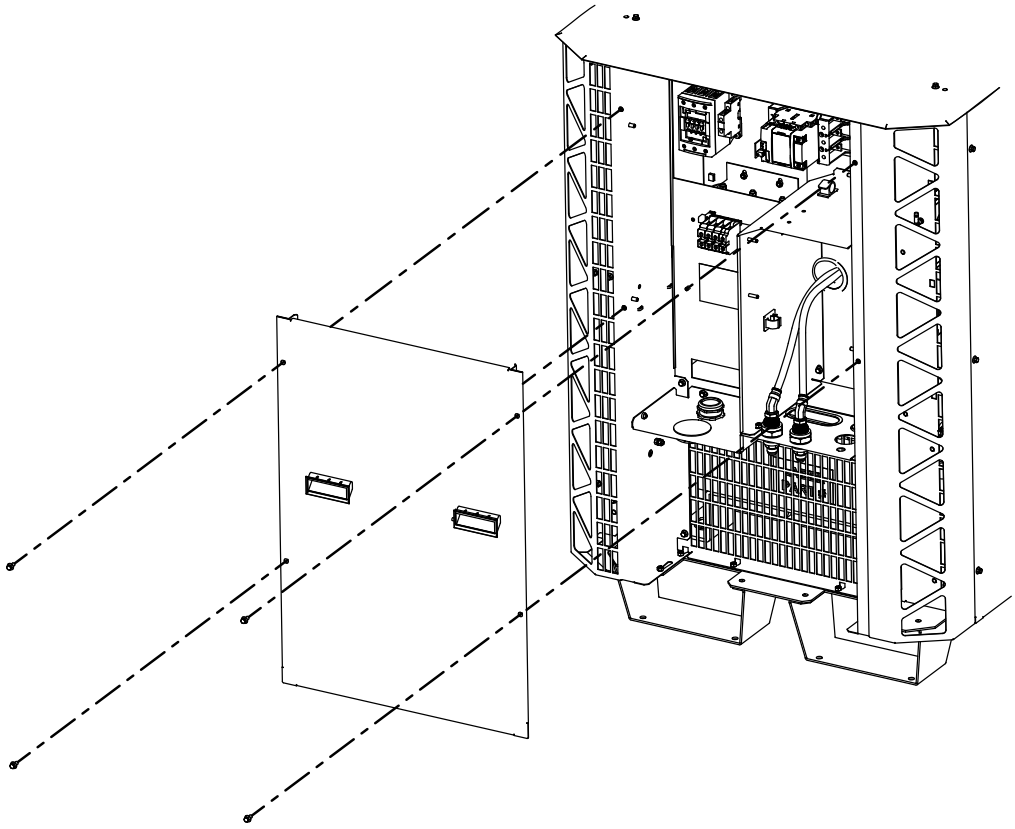

2. Use a #2 Phillips screwdriver to remove the four screws from the studs.

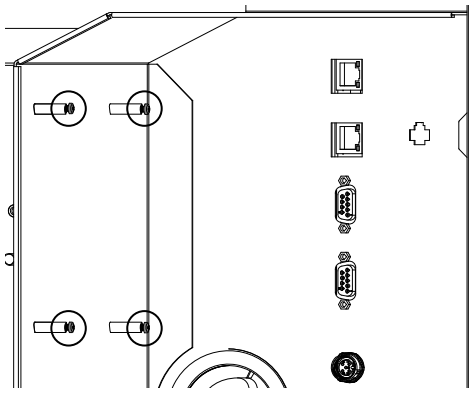

3. With J3 on top, use the four screws to install the PCB on the studs.

   Tighten the screws to 0.9 N·m (8.0 lbf·in).

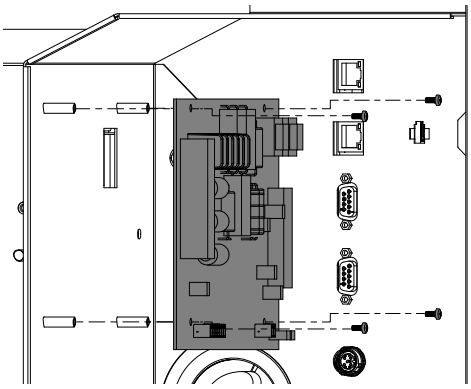

Connect the VDC3 PCB (141511) (if applicable)

After installing the VDC3 PCB in the plasma power supply, you must make the necessary connections with the included wire bundle.

1. Remove the wire bundle from the wire clip in the plasma power supply.

   The wire bundle is included in the plasma power supply. The bundle includes the arc voltage wires and power wires.

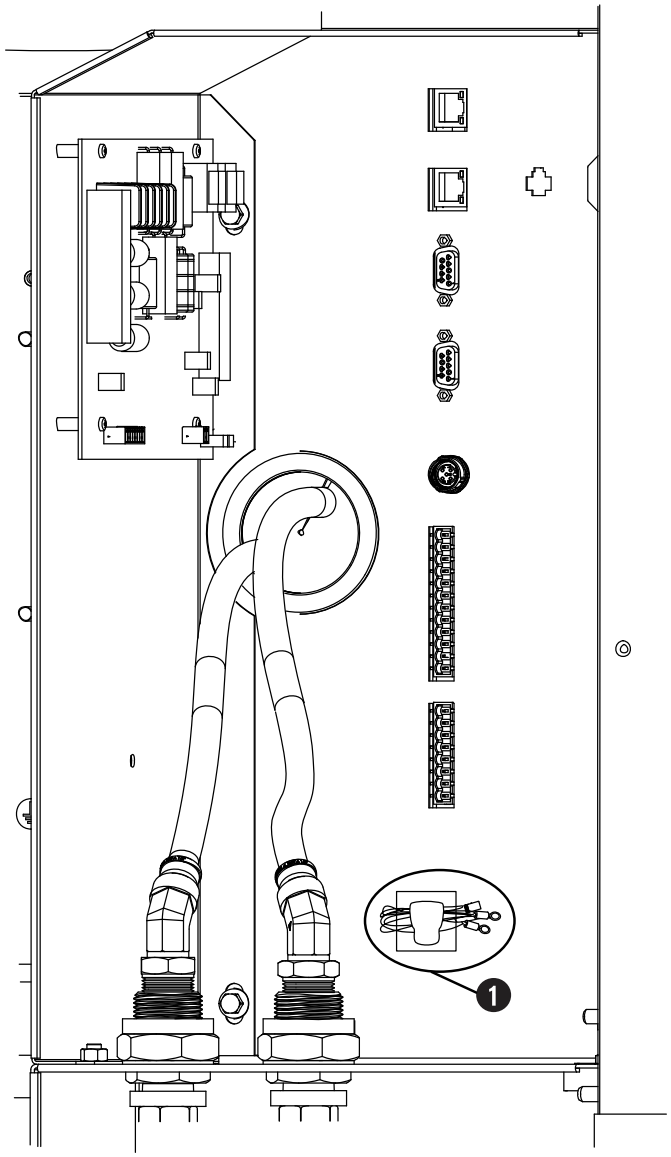

1 Location of example wire clip and wire bundle in the plasma power supply

2. Connect one end of the VDC3 120 VAC harness to J1 of the VDC3 PCB with the tab on top, as shown.
3. Connect the other end of the VDC3 120 VAC harness to the 120 VAC connector.

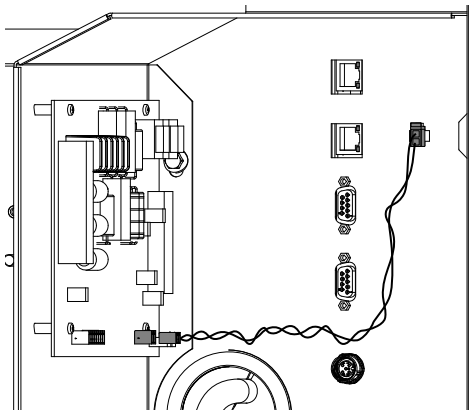

4. Attach the spade connector of the yellow wire (WORK) to the J3-WORK terminal, as shown.
5. Attach the spade connector of the yellow/black wire (NEG) to the J3-ELECTRODE terminal.

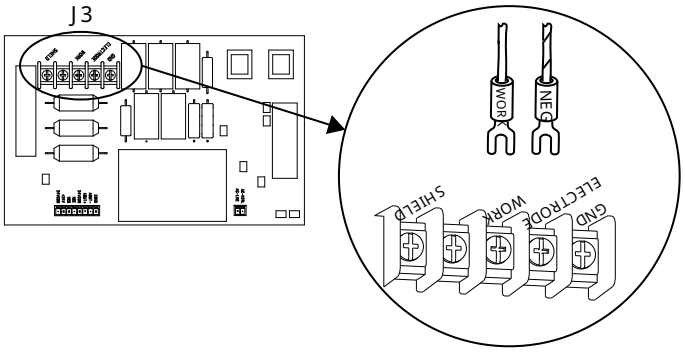

6. Attach the ring connector on the yellow wire (WORK) to the work bolt in the plasma power supply.

   Tighten the nut to 20 N·m (15 lbf·ft).
7. Attach the ring connector on the yellow/black wire (NEG) to the negative bolt in the plasma power supply.

   Other wires are already attached to the bolts in the plasma power supply. Attach the arc voltage wires on top of the existing wires.

   Tighten the nut to 20 N·m (15 lbf·ft).

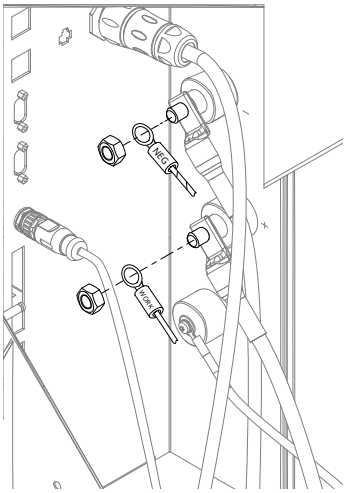

8. Use NCS (pin 3), NCE (pin 4), Aout+ (pin 6), and Aout- (pin 7) to connect to the CNC.

   Refer to Diagram of PCB, cable, and wire connections (if applicable) on page 166 for the locations of the pins and for the pinout.

9. Install the rear panel of the plasma power supply.

What to do next: Use the interface requirements of your CNC for additional connection requirements.

Requirements for the XPR web interface

You can connect to the XPR web interface through Wi-Fi with AP mode or through a direct connection with Ethernet LAN.

NOTICE

WEAK NETWORK SECURITY INCREASES THE RISK FOR UNAUTHORIZED CUTTING SYSTEM OPERATION OR MISUSE

If you use a wireless (Wi-Fi) network to communicate with your cutting system, Hypertherm recommends the use of a secure Wi-Fi network to minimize the risk of unauthorized cutting system operation or misuse. Unauthorized access or misuse of the Wi-Fi network can result in incorrect settings or commands. Bad settings and commands can cause an uncontrollable or unusable system. A bad effect on system performance, shortened consumable life, and torch damage is also possible. Minimum security features can include, but are not limited to, the following:

- Password protection with minimum password complexity
- WPA2 security for the plasma power supply
- A hidden Service Set Identifier (SSID) for the Wi-Fi network
- Operator training about network security

You must use discrete with the XPR web interface to operate the cutting system.

If you go out of range with the computer-based device with a screen, you cannot communicate with the cutting system. The cutting system continues to operate. For more information about distances for wireless, refer to Distance requirements for communications on page 69.

Hypertherm recommends a minimum distance of one meter (3.3 feet) between the plasma power supply and other system components, or between the plasma power supply and an obstacle.

You can use one of these options to connect to the XPR web interface:

- AP mode. Refer to Use AP mode to connect (wireless) on page 175.
  - Connect to the same network as the plasma power supply.
  - AP mode is the default connection option to connect to a single plasma power supply.
- Ethernet LAN. Refer to Connect to the plasma power supply with Ethernet LAN (wired) on page 194.
  - Cutting systems that have the 141545 main control PCB, firmware version 1.2 or more, and the expansion PCB can use the Ethernet LAN port that is on the expansion PCB with a wired 10M Ethernet link to connect to the XPR web interface.
  - Ethernet LAN is configured to be enabled in Dynamic Host Configuration Protocol (DHCP) mode and is enabled by default. You can configure Ethernet LAN settings from the **Other** screen in the XPR web interface through Wi-Fi or Ethernet LAN, or through serial RS-422

or EtherCAT commands. For information about how to do this refer to Configure Ethernet LAN settings on page 199 or *Serial and EtherCAT Commands* in the *CNC Communication Protocol for the XPR Cutting Systems (10085793)*

Support information for the XPR web interface

- If you have a problem connecting and you think it is a problem with your device, router, or local network, speak to your system administrator.
- If you have a problem connecting, there can be a problem with the plasma power supply. Speak to your cutting machine supplier or regional Hypertherm Technical Service team.

Use AP mode to connect (wireless)

In AP mode, each plasma power supply has its own connection. You can only connect to and control one plasma power supply at a time.

Before you begin: You must have a computer-based device with a screen, a web browser that has support for the latest web standards, and wireless access.

1. Supply power to the cutting system:
    a. Set the line-disconnect switch to the ON position.
    b. Make sure that the power-indicator LED on the plasma power supply is illuminated.
    c. Make sure that the remote on-off switch for the plasma power supply is set to ON.
    d. If the redundant remote on-off switch is installed, make sure that it is set to ON.
2. On your device, go to the wireless connections menu.

    This menu can be different on different devices.
3. Choose the XPR connection.

    The default connection name is "xpr" + the System ID. The System ID is the last four digits of the Media Access Control (MAC) address. For more information about the System ID and MAC address, refer to Web interface screen information on page 184.

    If you want to change the connection name or password, refer to Change the limited AP settings on page 177 Other screen on page 191.

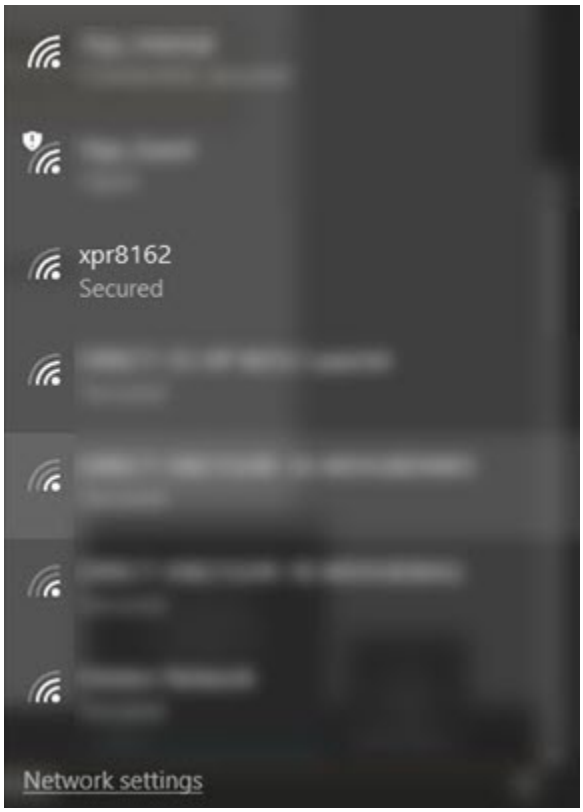

4. Enter the password.

   The default password is `hypertherm`. If you want to change the connection name, refer to Change the limited AP settings on page 177 Other screen on page 191.

5. Open a web browser.

6. Go to 192.168.1.1/index.html.

7. To fully operate the cutting system, you must also use discrete.

   Refer to Connect to the plasma power supply with discrete on page 162.

- The plasma power supply is now connected.
- The main screen of the XPR web interface shows information about the connected plasma power supply in the top-left corner.
- If the **Client ID** and the **Operator ID** are the same on your device, you are in control of the plasma power supply and can set a process.
- Refer to Web interface screen information on page 184 for more information about the interface menus.

Figure 45 - Plasma power supply and connection information in the web interface

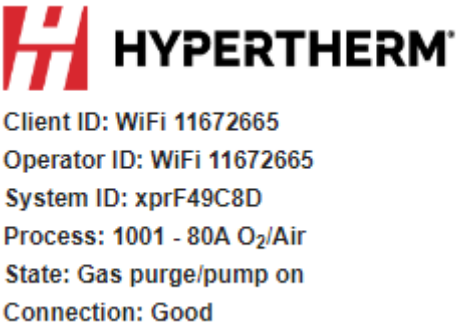

Change the limited AP settings

You can change the limited AP SSID, channel, and security settings in the **Connect** screen.

1. On the **Device Setup** screen, choose **Network** > **ap0** > **Link** > **Configuration**.

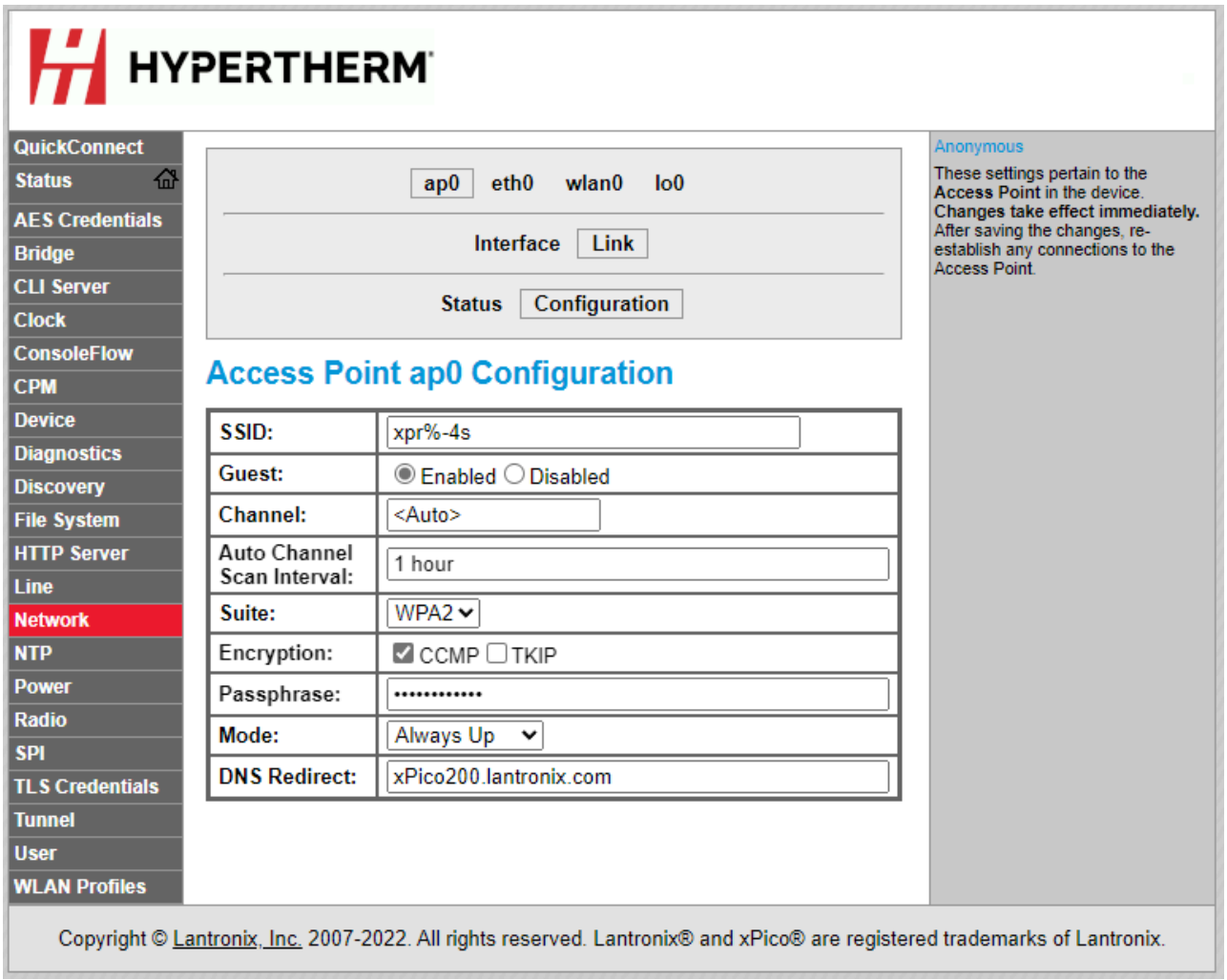

2. On the **Configuration** screen, change the settings.
3. Make sure that all of the settings are correct, then choose **Submit** to save and apply them.
4. Remove the power from the cutting system.
5. Supply power to the cutting system.

The change goes into effect after you remove and then supply power to the cutting system.

Reset the wireless module

It is possible to make mistakes when you set up the wireless module. Use this procedure to set your wireless module to its default settings.

⚠ WARNING



ELECTRIC SHOCK CAN KILL

The plasma power supply contains dangerous electric voltages that can seriously injure or kill you. Even if the plasma power supply is turned OFF, you can still get a serious electric shock if the plasma power supply remains connected to an electric power source.

Use extreme caution if you do diagnosis or maintenance tasks when the plasma power supply remains connected to an electric power source and the outer cover or panels are removed. All work that requires removal of the plasma power supply outer cover or panels must be done by a qualified technician. Refer to the *Safety and Compliance Manual (80669C)* for more safety information.

1. Remove the power from the cutting system:
    a. Set the line-disconnect switch to the OFF position.
    b. Make sure that the power-indicator LED on the plasma power supply is not illuminated.
2. If used, make sure that the alternate 24 VDC power input is removed from the main control PCB.
3. Remove the control-side panel of the plasma power supply.
4. Set position 4 on DIP switch S3 on the main control PCB to the ON position.

    This disables the wireless connection.

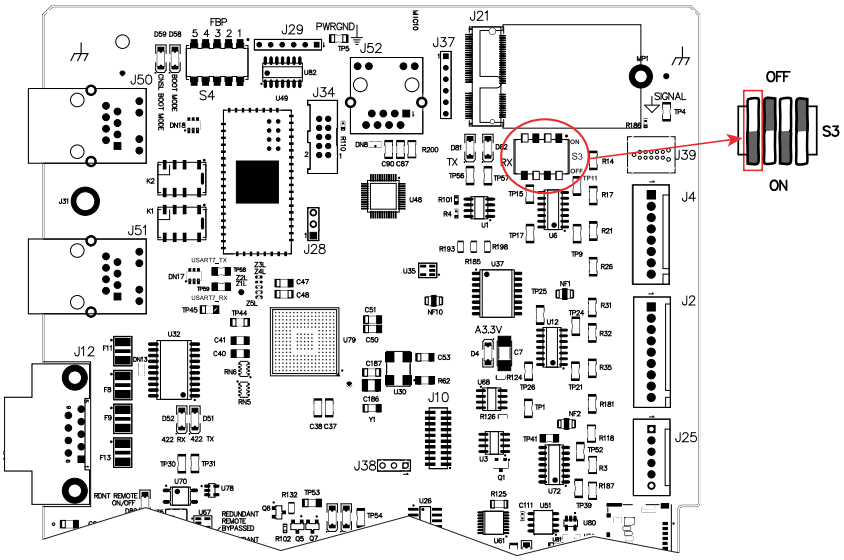

5. Install the control-side panel of the plasma power supply.

6. Supply power to the cutting system:
    a. Set the line-disconnect switch to the ON position.
    b. Make sure that the power-indicator LED on the plasma power supply is illuminated.
7. If used, make sure that the alternate 24 VDC power input is supplied to the main control PCB.
8. Wait one minute.
9. Remove the power from the cutting system:
    a. Set the line-disconnect switch to the OFF position.
    b. Make sure that the power-indicator LED on the plasma power supply is not illuminated.
10. If used, make sure that the alternate 24 VDC power input is removed from the main control PCB.
11. Set position 4 on DIP switch S3 on the main control PCB to the OFF position.

    This enables the wireless connection.

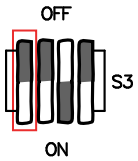

12. Install the control-side panel of the plasma power supply.
13. Supply power to the cutting system:
    a. Set the line-disconnect switch to the ON position.
    b. Make sure that the power-indicator LED on the plasma power supply is illuminated.
14. If used, make sure that the alternate 24 VDC power input is supplied to the main control PCB.
15. Wait two minutes.

The wireless module is now set to the factory-default settings.

Disable the wireless connection temporarily

If you want to disable the wireless connection temporarily, use this procedure.

Before you begin:

⚠ WARNING



ELECTRIC SHOCK CAN KILL

The plasma power supply contains dangerous electric voltages that can seriously injure or kill you. Even if the plasma power supply is turned OFF, you can still get a serious electric shock if the plasma power supply remains connected to an electric power source.

Use extreme caution if you do diagnosis or maintenance tasks when the plasma power supply remains connected to an electric power source and the outer cover or panels are removed. All work that requires removal of the plasma power supply outer cover or panels must be done by a qualified technician. Refer to the *Safety and Compliance Manual (80669C)* for more safety information.

1. Remove the power from the cutting system:
    a. Set the line-disconnect switch to the OFF position.
    b. Make sure that the power-indicator LED on the plasma power supply is not illuminated.
2. If used, make sure that the alternate 24 VDC power input is removed from the main control PCB.
3. Remove the control-side panel of the plasma power supply.
4. On the main control PCB, set position 4 on DIP switch S3 to the ON position.

    This disables the wireless.

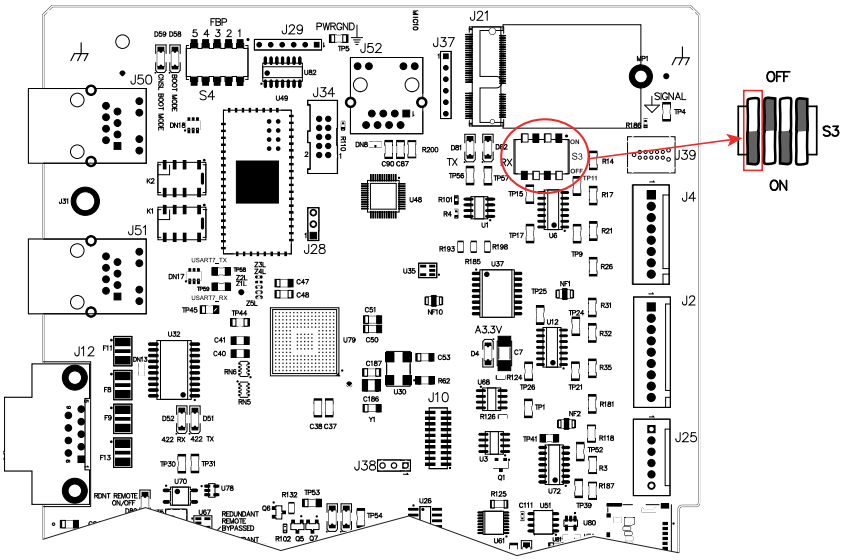

5. Install the control-side panel of the plasma power supply.

6. Supply power to the cutting system:
    a. Set the line-disconnect switch to the ON position.
    b. Make sure that the power-indicator LED on the plasma power supply is illuminated.
7. If used, make sure that the alternate 24 VDC power input is supplied to the main control PCB.

Disable the wireless connection permanently

If you want to disable the wireless connection permanently, use this procedure.

Before you begin:

⚠ WARNING

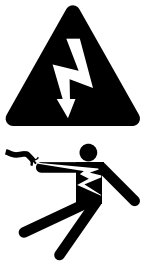

ELECTRIC SHOCK CAN KILL

The plasma power supply contains dangerous electric voltages that can seriously injure or kill you. Even if the plasma power supply is turned OFF, you can still get a serious electric shock if the plasma power supply remains connected to an electric power source.

Use extreme caution if you do diagnosis or maintenance tasks when the plasma power supply remains connected to an electric power source and the outer cover or panels are removed. All work that requires removal of the plasma power supply outer cover or panels must be done by a qualified technician. Refer to the *Safety and Compliance Manual (80669C)* for more safety information.

1. Remove the power from the cutting system:
    a. Set the line-disconnect switch to the OFF position.
    b. Make sure that the power-indicator LED on the plasma power supply is not illuminated.
2. If used, make sure that the alternate 24 VDC power input is removed from the main control PCB.
3. Remove the control-side panel of the plasma power supply.
4. On the main control PCB, find the Wi-Fi module in the J21 connector.
5. Remove the antenna from the rear panel of the plasma power supply, and remove the antenna connection from the Wi-Fi module on the main control PCB.
6. Use a #0 Phillips screwdriver to remove the screw that holds the Wi-Fi module on the main control PCB.

As you loosen the screw, the Wi-Fi module can move away from the main control PCB.

7. Use your fingers to lift the Wi-Fi module off the J21 connector and out of the plasma power supply.
8. Install the control-side panel of the plasma power supply.
9. Supply power to the cutting system:
    a. Set the line-disconnect switch to the ON position.
    b. Make sure that the power-indicator LED on the plasma power supply is illuminated.
10. If used, make sure that the alternate 24 VDC power input is supplied to the main control PCB.

Web interface screen information

If you replace the control PCB, the information on the PCB changes. This includes the MAC address, System ID, passwords, and network information.

System ID

This is the identifier for the plasma power supply. It is the last four digits of the MAC address. The MAC address is on a label on the Wi-Fi module and on a label on the rear of the plasma power supply.

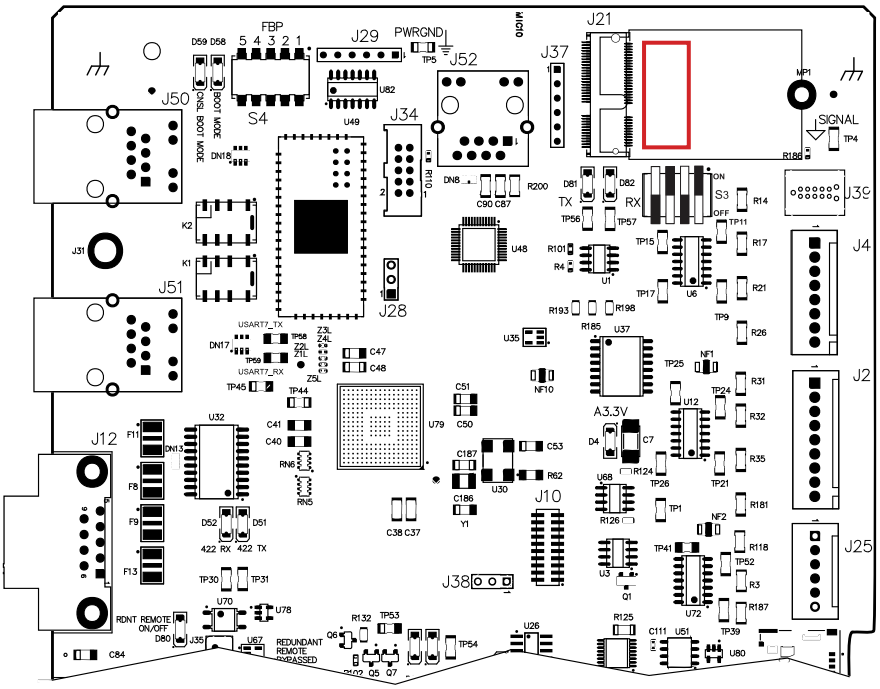

Operator ID

This is the identifier for the device or client that has control of the plasma power supply. The first part of the **Operator ID** shows the type of connection that sent a process, **Web** for wireless or **Ethernet LAN**, **Uart 422** for serial RS-422, or **EtherCAT** for EtherCAT.

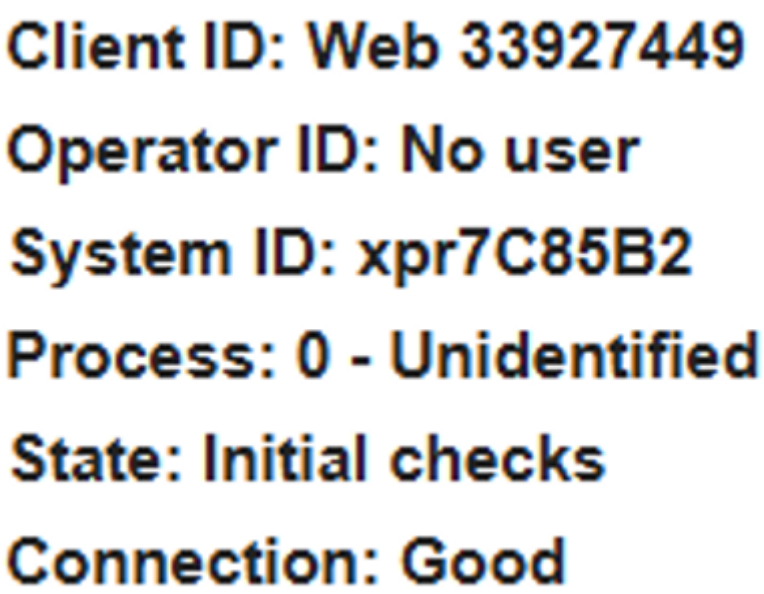

To change which device has control of the plasma power supply, refer to Change the device that has control on page 206.

Client ID

This is the identifier for a device that communicates with the plasma power supply. This ID uses the Coordinated Universal Time (UTC) timestamp and is saved in a browser cookie.

If the **Client ID** and the **Operator ID** are the same on your device, you are in control of the plasma power supply.

Connection

This is the status of the communication between the device and the plasma power supply. (Good or Error.)

Plasma power supply screen

On this screen you can monitor the status of the plasma power supply. This screen also shows a list of inputs and outputs. When an input or output is active, the screen shows it as red or gray.

Figure 46 - Example of the plasma power supply screen

Status

Type	XPR OptiMix
State	Wait for start
Log	0
Process	2053 - 130A Mix/N_2
Arc Time	0d 0h 20min 51s
(+) DC	300 A
Coolant Flow	7.96 lpm (2.1 gpm)
Coolant Level	Low

IO

Inputs	Outputs
On Switch	Main Contactor
Start	Coolant Pump
Hold	Coolant Solenoid
Pierce	Magnetics Fans
	Heat Exchanger Fans
	Ready for Start
	Ohmic Contact
	Motion
	Hold
	Error

Fan Speed

Heat Exchanger 1	2950 rpm
Heat Exchanger 2	2951 rpm
Magnetics 1	2952 rpm
Magnetics 2	2953 rpm
Control Side 1	6150 rpm
Control Side 2	6250 rpm

Temperature

Coolant	24.9 °C (77 °F)
Transformer	26 °C (79 °F)
Inductor 1	25.1 °C (77 °F)
Inductor 2	25.2 °C (77 °F)
Inductor 3	25.3 °C (78 °F)
Inductor 4	25.4 °C (78 °F)

Chopper

	Setpoint	DC	Temperature
Chopper 1	150 A	151 A	69 °C (156 °F)
Chopper 2	150 A	149 A	70 °C (158 °F)

Arc Voltage	126 V
Bus Voltage	325.8 V

The XPR web interface shows different fields for different XPR models. The screen shown is for reference only.

Gas system screen

On this screen you can monitor the status of the TorchConnect console and the gas connect console. You can also see which valves are active when the gas is flowing.

There are two view options for this screen.

Text view

In text view, text identifies real-time gas pressures and currently active valve states. When a valve is active, the screen shows it as gray.

Both bar and psi units of measure are shown on this screen.

Diagram view

In diagram view a diagram shows:

- Real-time gas pressures and currently active valve states.
- Pressurized volumes and energized valves that show color when a valve is active and lines that change opacity as the amount of pressure changes.
- Pressure measurements and setpoints near the proportional valves and duty cycle (Pulse-width Modulation (PWM)) sensors identified by the diagram.

This screen gives you the option to show either bar or psi units of measure.

You can do four tests from this screen:

- Test Preflow
- Test Cutflow
- Test Pierceflow
- Gas Leak Test



The gas leak test can be done with all gas connect consoles. Refer to Do a gas leak test on page 307.

The test starts when you choose the button. When the button is active, the screen shows it as red. Active valves show gray. The gases on Line A, Line B, and shield align with the process ID that you selected. The gases flow for 60 seconds, unless you choose the same button or choose another button that stops the test.

Figure 47 - Example text-view screen that shows the gas system status

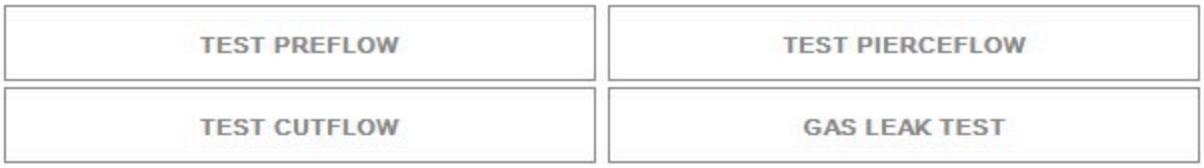

DIAGRAM VIEW

Torch Connect

	Type	Setpoint	Output		Inlet		PWM	
Line A	Mix	0.00 bar (0 psi)	P5	4.21 bar (61 psi)	P2	7.72 bar (112 psi)	B3	0%
Line B	N_2	0.00 bar (0 psi)	P3	0.00 bar (0 psi)	P1	7.58 bar (110 psi)	B1	0%
Shield	Air	2.41 bar (35 psi)	P14	2.48 bar (36 psi)	P4	7.79 bar (113 psi)	B2	28%

Valve States V1 V4 V5 V6 V7 V8 V9 V10 V11 V12

OptiMix

	Setpoint	Output		Inlet		PWM	
H_2O	0.00 bar (0 psi)	P9	0.00 bar (0 psi)	P8	2.41 bar (35 psi)	B5	0%
F5	0.00 bar (0 psi)	P7	0.00 bar (0 psi)	P6	7.93 bar (115 psi)	B4	0%
H_2	25 slpm	MF4	26 slpm	P10	7.93 bar (115 psi)	B8	75%
Ar	15 slpm	MF5	16 slpm	P11	7.58 bar (110 psi)	B9	35%
N_2	35 slpm	MF6	36 slpm	P12	8.62 bar (125 psi)	B10	65%

Outlet Pressure P21 3.79 bar (55 psi)

Figure 48 - Example diagram-view screen that shows the gas system status

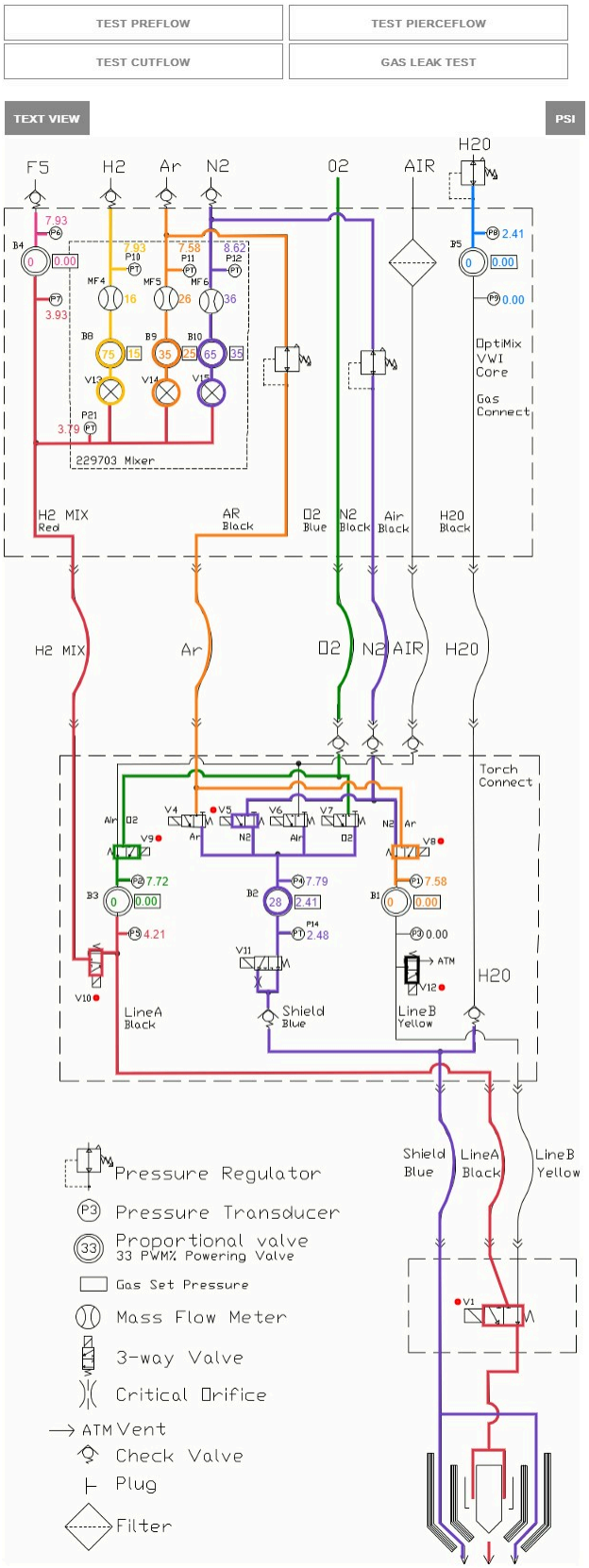

Log screen

On this screen you can monitor active diagnostic codes and see diagnostic code history.

There are four categories of codes: information, alert, error, and failure. Refer to Diagnostic codes on page 291 for definitions.

Figure 49 - Example of a log screen

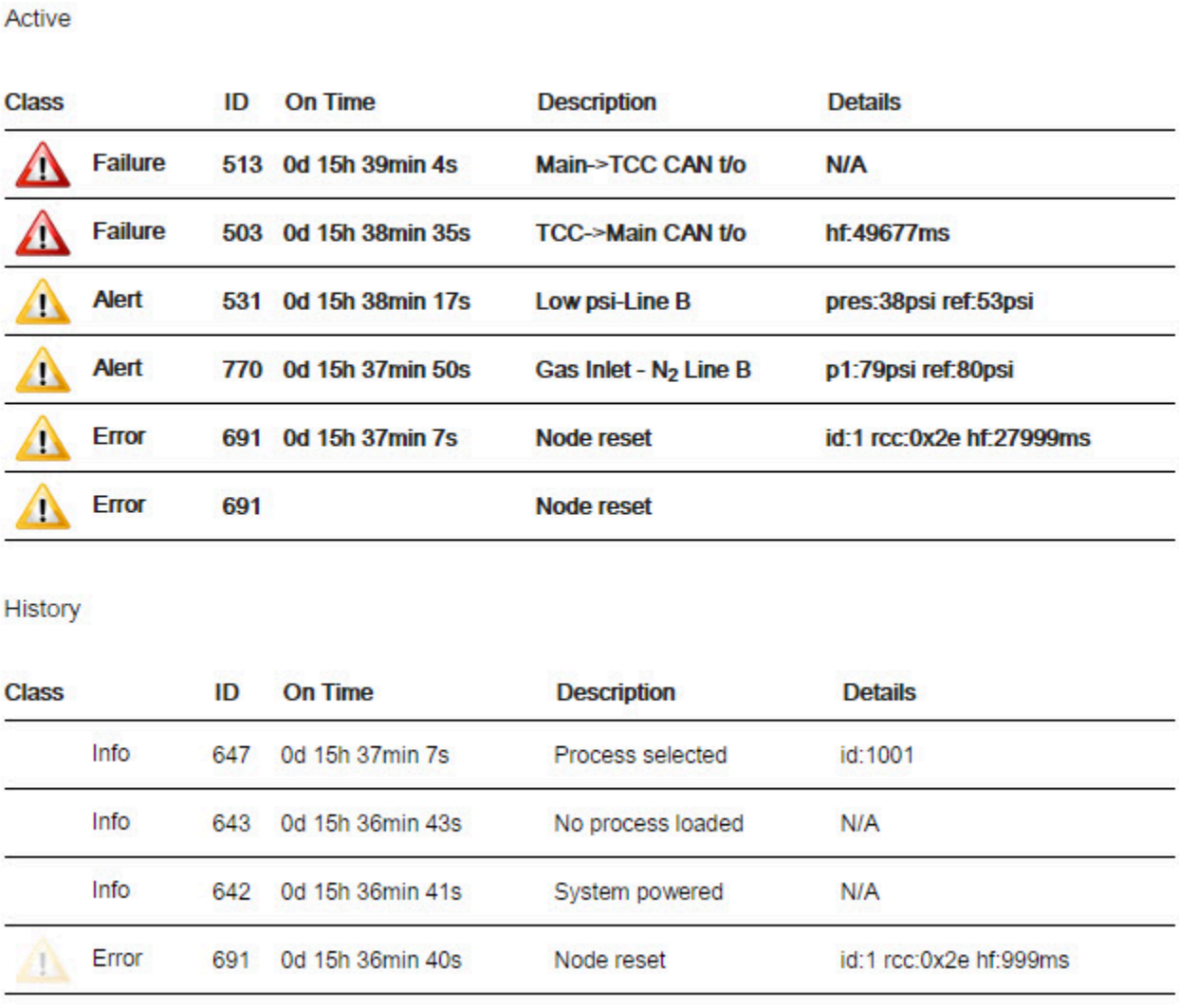

Active

Class	ID	On Time	Description	Details
Failure	513	0d 15h 39min 4s	Main->TCC CAN t/o	N/A
Failure	503	0d 15h 38min 35s	TCC->Main CAN t/o	hf:49677ms
Alert	531	0d 15h 38min 17s	Low psi-Line B	pres:38psi ref:53psi
Alert	770	0d 15h 37min 50s	Gas Inlet - N_2 Line B	p1:79psi ref:80psi
Error	691	0d 15h 37min 7s	Node reset	id:1 rcc:0x2e hf:27999ms
Error	691		Node reset	

History

Class	ID	On Time	Description	Details
Info	647	0d 15h 37min 7s	Process selected	id:1001
Info	643	0d 15h 36min 43s	No process loaded	N/A
Info	642	0d 15h 36min 41s	System powered	N/A
Error	691	0d 15h 36min 40s	Node reset	id:1 rcc:0x2e hf:999ms

Operate screen

On this screen, if you have the device that is in control of the plasma power supply, you can select a process ID that aligns with the material, thickness, and process type.

You can customize some parameters by choosing the **+** to open the menu. The plasma power supply keeps the same parameters until a new process is selected or until the current process is set again with

new parameters. The current process can be set again by removing power from the plasma power supply or by setting the remote on-off switch to the OFF position during the gas-purge state. If manual-set mode is enabled, the process parameters will change only after a new process is selected.

Figure 50 - Example of an Operate screen

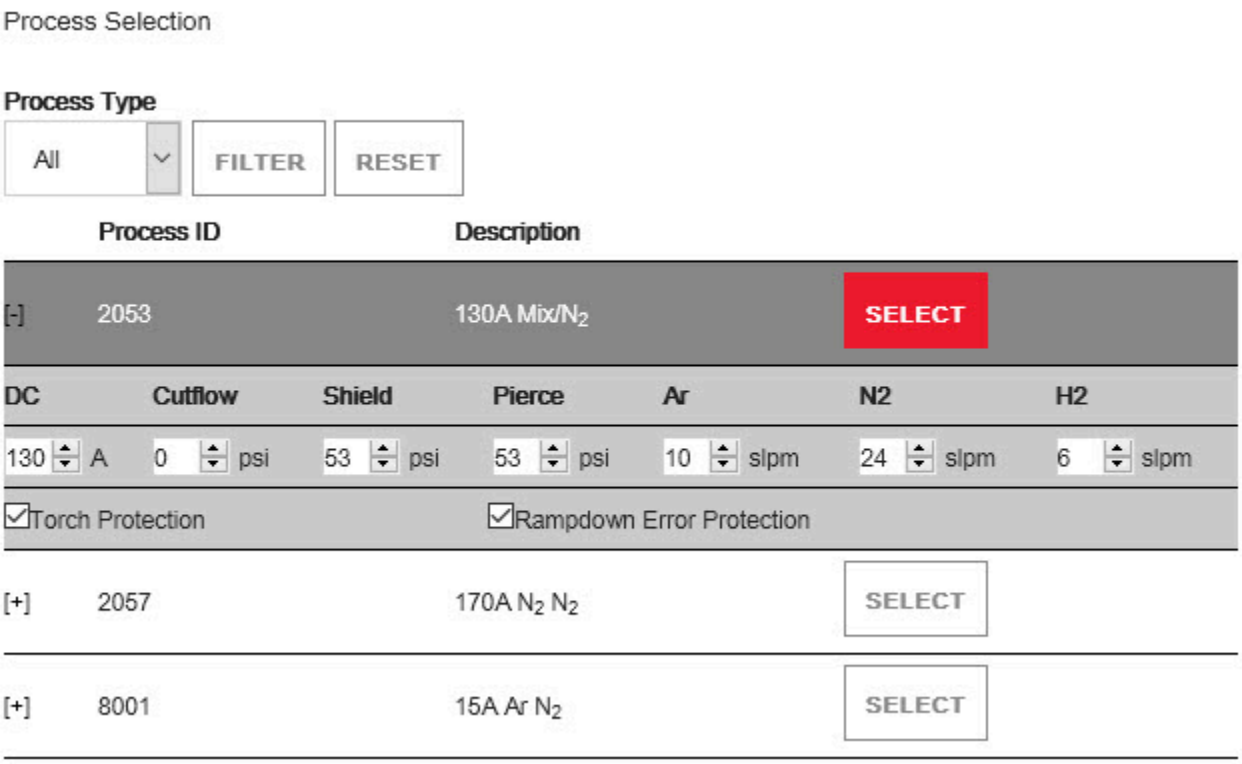

Other screen

On this screen you can find the firmware versions, system statistics, information about the wireless connection, and configuration options by feature type. You can also select the **Connect**, **Firmware Update**, and **Reset Operator** commands.

Connect

On this screen you can change your client settings and connect to other networks.

Firmware Update

On this screen you can update the web interface and firmware. For information about how to do this, refer to *XPR Web Interface and PCB Updates Field Service Bulletin (10084813)*.

Reset Operator

Use this button to reset the Operator ID. For information about how to do this, refer to Change the device that has control on page 206.

Figure 51 - Example of an Other screen

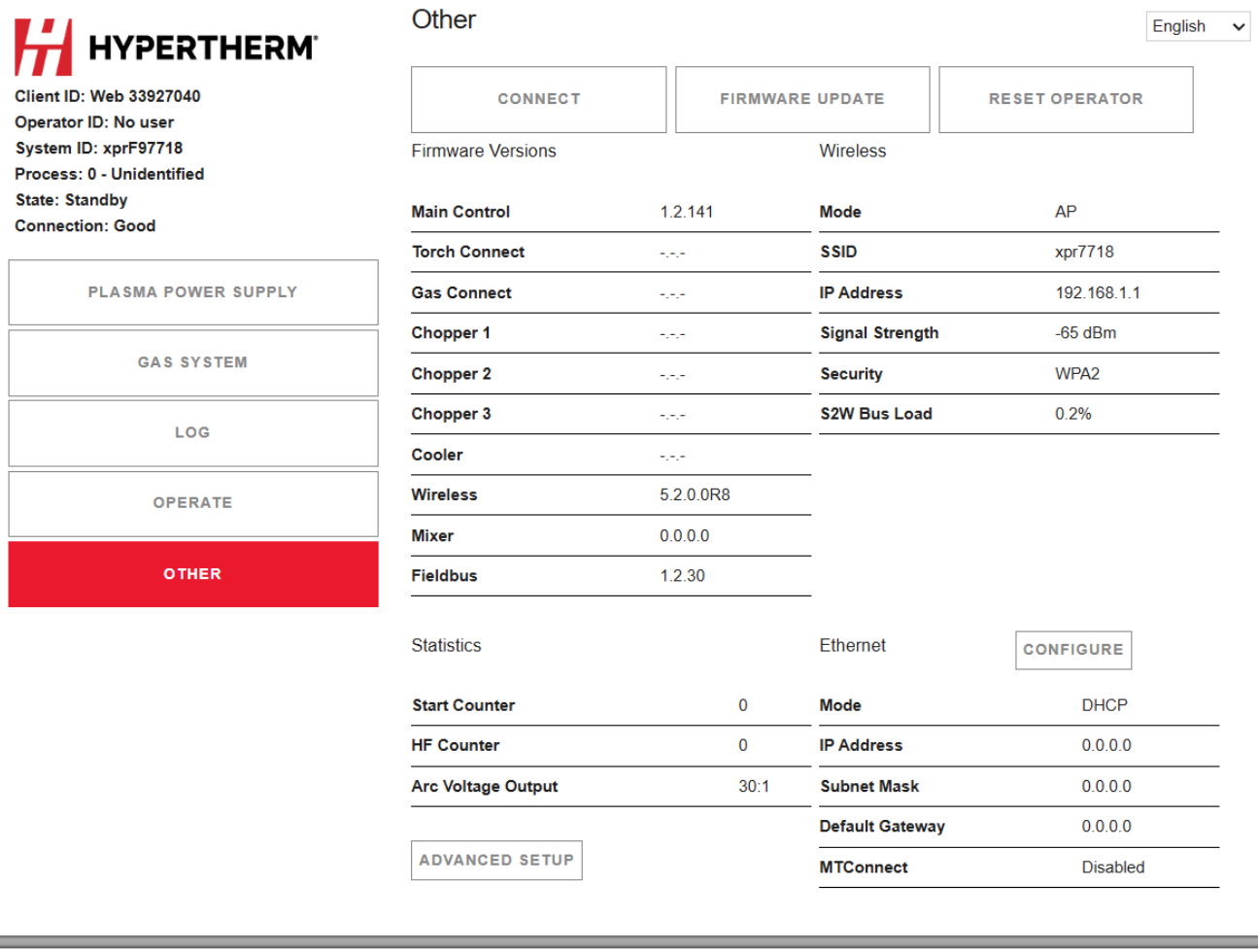

The XPR web interface shows different fields for different models. The screen shown is for reference only.

Requirements for Ethernet LAN (wired)

Before you use an Ethernet LAN interface to connect to the XPR cutting system, review this information. This information prepares you to use an Ethernet LAN interface.

NOTICE

WEAK NETWORK SECURITY INCREASES THE RISK FOR UNAUTHORIZED CUTTING SYSTEM OPERATION OR MISUSE

If you use a Ethernet network to communicate with your cutting system, Hypertherm recommends the use of a secure Ethernet network to minimize the risk of unauthorized cutting system operation or misuse. Unauthorized access or misuse of the Ethernet network can result in incorrect settings or commands. Bad settings and commands can cause an uncontrollable or unusable system. A bad effect on system performance, shortened consumable life, and torch damage is also possible. Minimum security features can include, but are not limited to, the following:

- Password protection with minimum password complexity
- Operator training about network security

NOTICE

INCORRECT ETHERNET LAN CABLE CONNECTIONS CAN HAVE A BAD EFFECT ON CUTTING SYSTEM OPERATION AND CAUSE EQUIPMENT DAMAGE

Connecting the Ethernet LAN cable directly to the main control PCB (141545) can cause these problems: corrupt data, incorrect data, missing data packets, or damage to the main control PCB.

Do **not** connect the Ethernet LAN cable from the control or monitoring device directly to the main control PCB.

Connect the Ethernet LAN cable from the control or monitoring device **only** to the expansion PCB (141597). If the expansion PCB is not installed on your plasma power supply, then the Ethernet LAN connection option is not available for your cutting system.

- Cutting systems that have the 141545 main control PCB with firmware version 1.2 or more and the expansion PCB can use the Ethernet LAN port that is on the expansion PCB with a wired 10M Ethernet LAN interface to connect to the XPR web interface.
- Before you use the Ethernet LAN port to connect to an Internet Protocol (IP) network that has Internet connectivity, Hypertherm recommends that you install a firewall device between the Internet connection and the network. Failure to use a firewall device increases the security risks for your network.
- You must use Ethernet LAN with discrete to operate the cutting system.
- The Ethernet LAN cable you use for Ethernet LAN connections must be Cat5e certified.

- Hypertherm recommends a minimum distance of one meter (3.3 feet) between the plasma power supply and other system components, or between the plasma power supply and an obstacle.
- To help prevent problems from EMI, make sure that any Ethernet LAN cable:
  - Has separation from the pilot-arc lead, negative lead, or any power cables that have a voltage higher than 120 VAC. Refer to Distance requirements between high-frequency cables and control cables on page 68.
  - Is not near the gas connect console or TorchConnect console.

Requirements for EtherCAT and Ethernet LAN cables

Use this table to identify the specification requirements for EtherCAT and Ethernet LAN interface cables.

Table 31 - EtherCAT and Ethernet LAN cable specifications

Cable element	Specification
Type	Cat5e, 4-wire, 2-pair, double-shielded (overall foil and braid shield)
Wire	▪ Construction: Stranded tinned wire ▪ Diameter: 0.75 mm (7 X 0.25 mm), 22 AWG ▪ Insulation: Polyethylene, 1.5 mm (0.06 inch) diameter
Core	▪ Construction: Filler as central element ▪ Layer 1: 4-wire, 2-pair in star-quad configuration ▪ Sequence of colors: White, yellow, blue, orange ▪ Layer 2: Plastic tape overlapped ▪ Inner jacket: Thermoplastic copolymer, 3.9 mm (0.04 inch) diameter ▪ Aluminum laminated foil overlapped ▪ Shield: Braided, tinned copper wires, 0.13 mm (0.005 inch) diameter, coverage approximately 85%, 4.7 mm (0.19 inch) diameter
Jacket	▪ Material: Polyurethane ▪ Wall thickness: 0.9 mm (0.04 inch) ▪ Outer diameter: 6.5 mm (0.26 inch) ± 0.2 mm (0.008 inch)
Maximum length for EtherCAT cables	75 m (246 ft)
Maximum length for Ethernet LAN cables	75 m (246 ft)

Connect to the plasma power supply with Ethernet LAN (wired)

Do these steps to connect the plasma power supply to the CNC with an Ethernet LAN cable.

Before you begin:

- Hypertherm sells interface cables that have been tested with our cutting system. Refer to EtherCAT and Ethernet LAN interface cables in the *Parts List*.
- If you supply your own cables, choose cables that are Cat5e certified. Refer to Requirements for EtherCAT and Ethernet LAN cables on page 151.

Figure 52 - Ethernet LAN cable

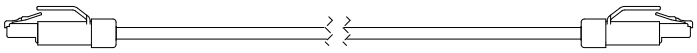

1. Remove the rear panel of the plasma power supply.

   Refer to Remove external panels from the system components on page 99.

2. Put one end of the Ethernet LAN cable in the Ethernet LAN port on the expansion PCB on the rear of the plasma power supply.

   Refer to Distance requirements between high-frequency cables and control cables on page 68.

3. Use the correct procedure for your connection method to connect the other end of the Ethernet LAN cable to a network router or computer-based device with a screen:

   a. Use the XPR web interface with Wi-Fi and a DHCP-capable router to connect on page 197

   b. Use the XPR web interface and no router to connect on page 198

4. To help prevent problems from EMI, make sure that the Ethernet LAN cable is not near the gas connect console or TorchConnect console.

5. If you want to operate the cutting system, continue with the next step.

   If you want to only monitor with an Ethernet LAN interface, you are done.

6. Connect to the plasma power supply with discrete on page 162.

7. Install the rear panel of the plasma power supply.

Figure 53 - Connect Ethernet LAN cables to the plasma power supply

Figure 53 - Connect Ethernet LAN cables to the plasma power supply (continued)

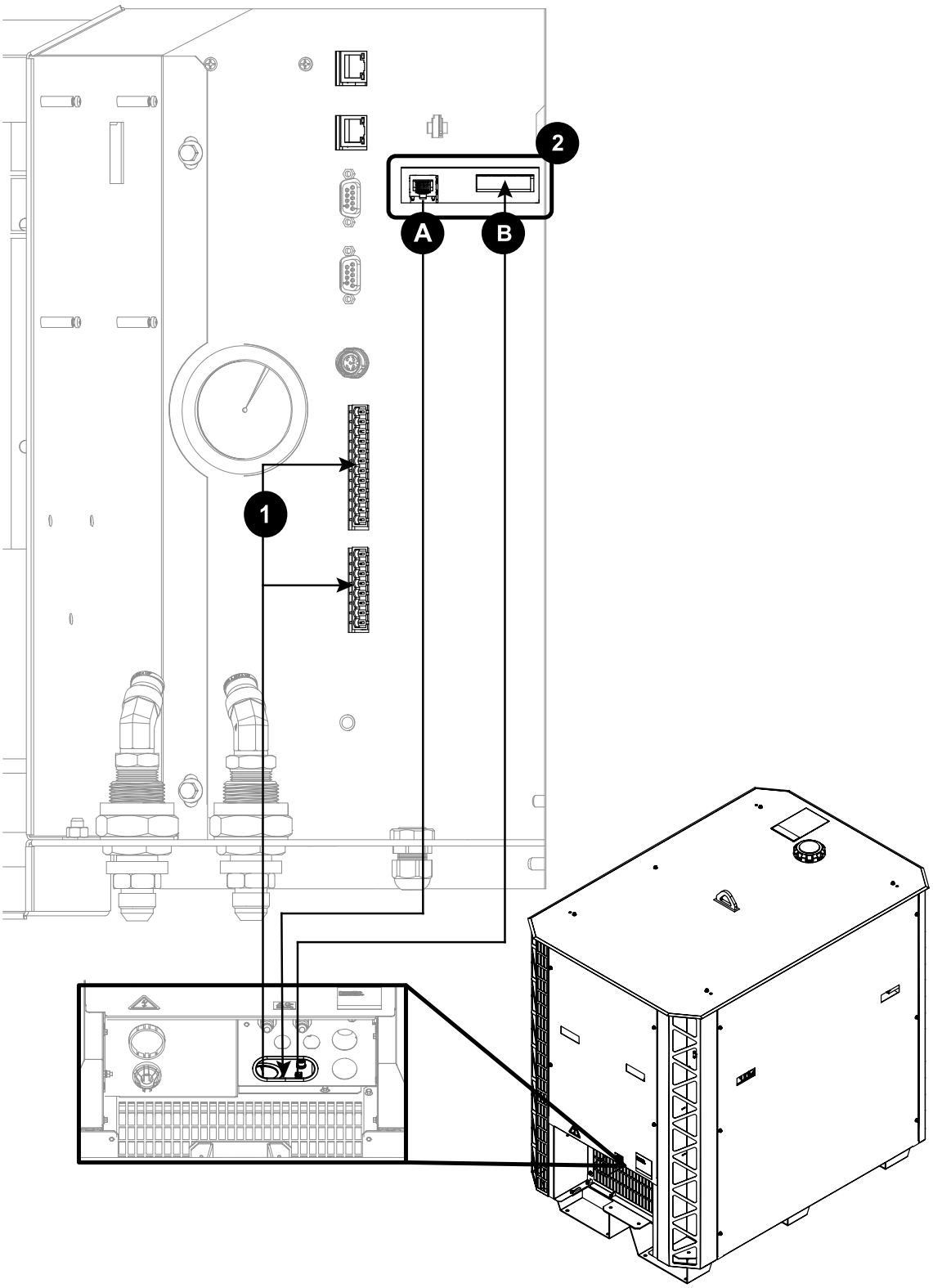

1 Discrete cable in from the CNC: Necessary with Ethernet LAN to operate the cutting system.

Figure 53 - Connect Ethernet LAN cables to the plasma power supply (continued)

2A Ethernet LAN port

2B Expansion PCB connectors: Necessary for the redundant remote on-off feature, alternate 24 VDC power input, and analog estimated arc voltage output.

Use the XPR web interface with Wi-Fi and a DHCP-capable router to connect

You must connect to the plasma power supply through the IP network before you can configure the Ethernet LAN settings for your cutting system. This information prepares you to use an Ethernet LAN interface and DHCP-capable router to connect to the plasma power supply.

The preferred method to connect to the plasma power supply and configure Ethernet LAN settings is to use the XPR web interface through Wi-Fi with a router that has DHCP capabilities. If the option to use the XPR web interface through Wi-Fi and a DHCP-capable router is not available, refer to Use the XPR web interface and no router to connect on page 198.

Before you begin: You must have a computer-based device with a screen, a web browser that has support for the latest web standards, wireless access, and a router that as DHCP capabilities.

1. Connect to the plasma power supply with Ethernet LAN (wired) on page 194.
2. Connect the other end of the Ethernet LAN cable to a network router that has DHCP capabilities.
3. Supply power to the cutting system:
    a. Set the line-disconnect switch to the ON position.
    b. Make sure that the power-indicator LED on the plasma power supply is illuminated.
4. Do the procedure in Use AP mode to connect (wireless) on page 175 to connect the computer-based device with a screen to the plasma power supply.
5. Go to the **Other** screen.

    The assigned IP address for the connected plasma shows in the field near **IP Address** in the **Ethernet** section of the **Other** screen.

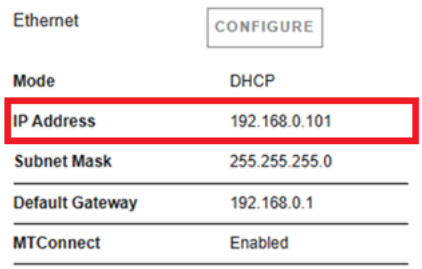

- The plasma power supply is now connected.

- The default Ethernet LAN settings will work with the DHCP-capable router. It is not necessary to change the default Ethernet LAN settings. But you can change the settings if you want.

What to do next:

- Do the procedure in Configure Ethernet LAN settings on page 199 if you want to change the settings.
- Use Ethernet LAN to get access to the XPR web interface on page 202.

Use the XPR web interface and no router to connect

You must connect to the plasma power supply through the IP network before you can configure the Ethernet LAN settings for your cutting system. This information prepares you to use an Ethernet LAN, serial RS-422, or EtherCAT communication method to connect to the plasma power supply.

If you do not have a router or if your router does not have DHCP capabilities, you must configure the Ethernet LAN settings after you connect to the plasma power supply. The default Ethernet LAN settings will not work with a non DHCP router. If you do not have a router or if your router does not have DHCP capabilities, use the XPR web interface through Ethernet LAN to connect to the plasma power supply and configure Ethernet LAN settings.

Before you begin: You must have a computer-based device with a screen and a web browser that has support for the latest web standards.

1. Connect to the plasma power supply with Ethernet LAN (wired) on page 194.
2. Connect the other end of the Ethernet LAN cable to your computer-based device with a screen.
3. Supply power to the cutting system:
    a. Set the line-disconnect switch to the ON position.
    b. Make sure that the power-indicator LED on the plasma power supply is illuminated.
4. Wait two minutes.
5. Navigate to http://169.254.0.100.

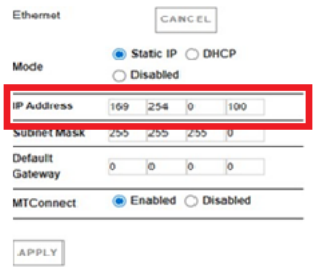

6. Do the procedure in Use Ethernet LAN to get access to the XPR web interface on page 202.

7. Go to the **Other** screen.

- The plasma power supply is now connected.
- The default Ethernet LAN settings must be configured.

What to do next: Configure the Ethernet LAN settings for your cutting system:

- Do the procedure in Configure Ethernet LAN settings on page 199 if you have an Ethernet LAN connection or wireless connection.
- Do the procedure in *Serial RS-422 and EtherCAT Commands* from the *CNC Communication Protocol for the XPR Cutting Systems (10085793)* if you have a serial RS-422 or EtherCAT connection or wireless connection.

Configure Ethernet LAN settings

This information prepares you to configure Ethernet LAN settings.

You can configure Ethernet LAN settings with the XPR web interface through one of these connection-mode options:

- DHCP mode
  - DHCP mode is the default connection mode. DHCP mode is the best option if the plasma power supply is connected to a router or other device that has DHCP capability.
  - In DHCP mode, the IP address, subnet mask, and default gateway are automatically assigned to each plasma power supply that is connected.
  - In DHCP mode, you can connect to and control multiple plasma powers supplies at the same time.
- Static IP mode
  - Static IP mode is a good connection option if there is only one plasma power supply connected for each computer-based device with a screen.
  - In static IP static mode, you must know the address of the local subnet you want to use, the subnet mask for that subnet address, and the IP addresses that are available.
  - If you do not know the address of the local subnet, the subnet mask for that subnet address, or the available IP addresses, you must configure the router to set up a local network subnet. Use the instructions for the router to do this.
  - Users who have experience with IP networks are best qualified to configure a router and set up a local network subnet. If you have questions or problems about how to do this, speak to your system administrator.
- Disabled mode
  - Disabled mode disables the Ethernet LAN port on the expansion PCB.

- In disabled mode, the LAN port stays inactive (OFF) until you change the setting from disabled mode to DHCP mode or from disabled mode to static IP mode, or until the factory-default configuration is enabled again.

- MTConnect
  - The Ethernet LAN setting for MTConnect is disabled by default.
  - You must change the setting to enabled to use MTConnect.
  - For information about MTConnect, refer to the instruction manual that came with your MTConnect kit.

Before you begin:

- You must have a computer-based device with a screen, a web browser that has support for the latest web standards, and wireless or Ethernet LAN access to the XPR web interface.
- Do the steps in this procedure if using the XPR web interface through Ethernet LAN connection or wireless connection to configure Ethernet LAN settings.
- If using Ethernet LAN settings through serial RS-422 or EtherCAT to configure Ethernet LAN settings, refer to *Serial RS-422 and EtherCAT commands* in the *CNC Communication Protocol for the XPR Cutting System (10085793)*.

1. Connect to the XPR web interface:

If your plasma power supply connects to the network through Wi-Fi...	Do the procedure in Use AP mode to connect (wireless) on page 175.
If your plasma power supply connects to the network through Ethernet LAN...	Do the procedure in Use Ethernet LAN to get access to the XPR web interface on page 202.

2. On the main screen for the XPR web interface choose **OTHER**.

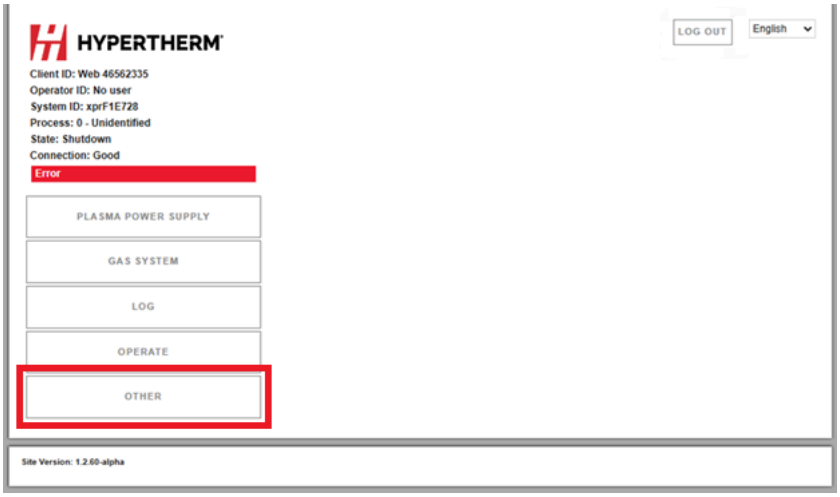

3. Choose **CONFIGURE**.

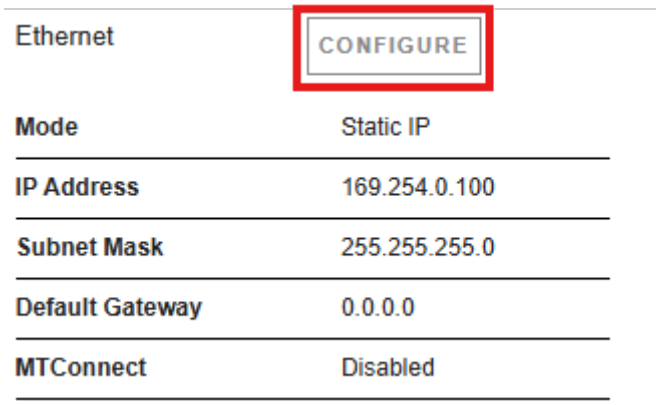

4. Choose the settings you want for the connection-mode option you have (Static IP, DHCP) or MTConnect (Enabled or Disabled).

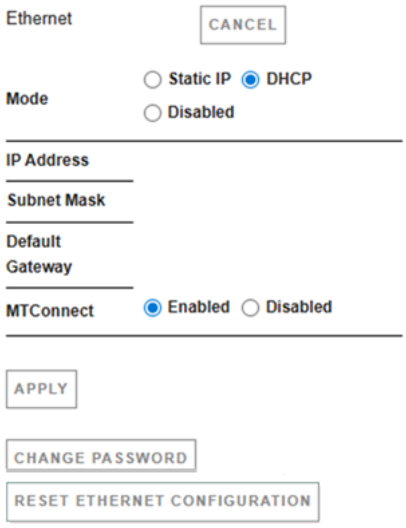

5. Do you want to keep the choices you made?

If yes...	Go to the next step.
If no...	Choose **CANCEL** to go back to the previous settings or choose **RESET ETHERNET CONFIGURATION** to go back to the factory-default Ethernet settings.

6. Choose **APPLY** to save the choices you made.

   Restart your cutting system if the XPR web interface prompts you to restart.

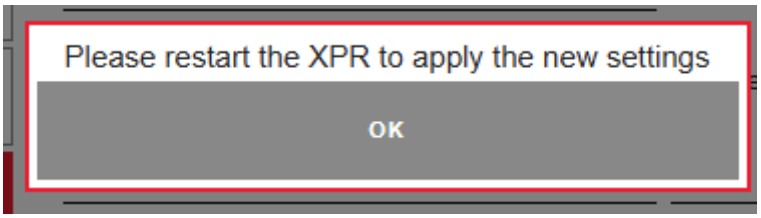

The Ethernet settings are enabled and the main screen for the XPR web interface shows.

What to do next: Choose **OTHER** to change or cancel an Ethernet LAN setting.

Use Ethernet LAN to get access to the XPR web interface

Do these steps to get access to the XPR web interface through Ethernet LAN.

Before you begin: You must have a computer-based device with a screen and a web browser that has support for the latest web standards.

1. Make sure your computer-based device with a screen is connected to the same network as the XPR cutting system.

   Based on your configured settings, this can be a direct connection through an Ethernet LAN cable or a connection through a router.

2. Open a web browser on your computer-based device with a screen.
3. In the address field for the web browser, enter the correct IP address for the plasma power supply you want.

   If you do not know the IP address, do the procedure in Use the XPR web interface with Wi-Fi and a DHCP-capable router to connect on page 197 or in Use the XPR web interface and no router to connect on page 198 to find the IP address.

4. Sign in to get access to the XPR web interface:

   a. Is this your fist sign in?

If no...	Enter your user name and password.
If yes...	Go to the next step.

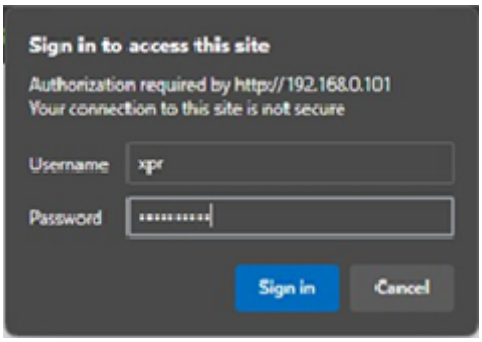

The default user name is "xpr" and the default password is "hypertherm."

b. Enter a new user name and password in the **XPR Configuration** screen.

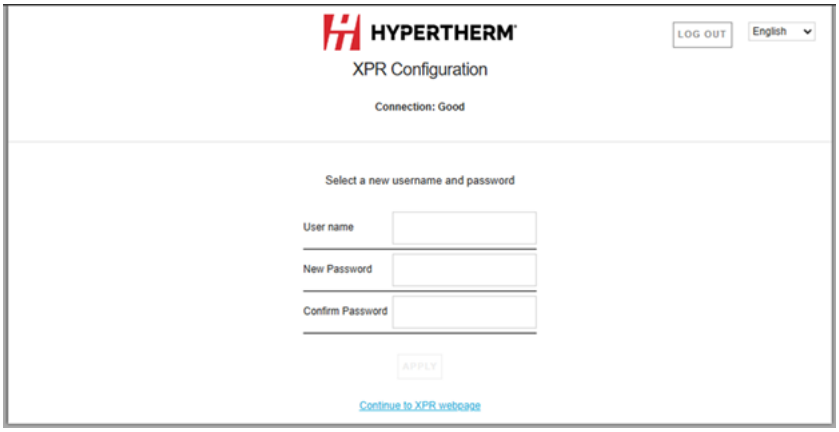

5. Choose **APPLY**.

- The plasma power supply is now connected.
- The main screen of the XPR web interface shows information about the connected plasma power supply in the top-left corner.
- If the **Client ID** and the **Operator ID** in the top-left corner are the same, you are in control of the plasma power supply and can set a process.

What to do next:

- Do the procedure in Connect to the plasma power supply with discrete on page 162 to fully operate the cutting system. To fully operate the cutting system, you must also use discrete.
- Do the procedure in Configure Ethernet LAN settings on page 199 if you want to change the settings.
- Refer to the instruction manual that came with your MTConnect kit if you want to configure MTConnect settings.

Requirements for manual-set mode

This information prepares you to use EtherCAT, serial RS-422, Ethernet LAN, or the XPR web interface through Wi-Fi or Ethernet LAN to enable or disable manual-set mode

- You must move the remote on-off switch from the ON position, to the OFF position, to the ON position again if manual-set mode is enabled and the remote on-off switch is in the ON position when power is supplied to the cutting system and the 648 **Waiting for user input** diagnostic code shows on the screen.

Figure 54 - Example Information diagnostic code 648

Class	ID	On Time	Description	Details
Info	648	2d 7h 31min 9s	Manual mode	Waiting for user input

- A manual-set mode process will be canceled if you select a new process before the previously selected manual-set mode process starts, if the manual-set mode configuration is not correct, or if there is a firmware update.

Use wireless or Ethernet LAN to enable or disable manual-set mode

Do these steps to use the XPR web interface through Wi-Fi or Ethernet LAN to enable or disable manual-set mode.

Before you begin: You must have a computer-based device with a screen, a web browser that has support for the latest web standards, and wireless access if using the XPR web interface through Wi-Fi to connect.

1. Do the procedure in Use AP mode to connect (wireless) on page 175 to connect the wireless set-up device to the plasma power supply if using wireless to enable or disable manual-set mode.

   If using Ethernet to enable or disable manual-set mode, do the procedure in Use Ethernet LAN to get access to the XPR web interface on page 202.

2. Go to the **OTHER** screen.
3. Choose **Advance Setup** to get access to the manual-set mode configuration menu.
4. Choose the correct button for the condition you want: **ENABLE** or **DISABLE**.

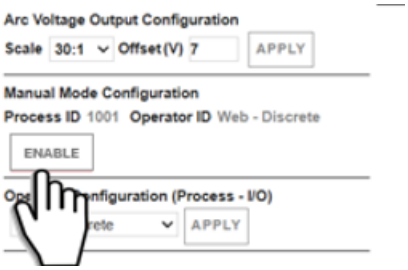

When manual-set mode is enabled, the cutting system automatically uses the active process that was set in manual-set mode every time power is supplied to the cutting system until that process is canceled or changed.

What to do next: Do the procedure in Process selection on page 237 if you want to change or cancel the setting, offset value, or detection mode for the active process that was set in manual-set mode.

Use EtherCAT or serial RS-422 to enable or disable manual-set mode

Do these steps to use EtherCAT or serial RS-422 to enable or disable manual-set mode.

1. From the CNC screen or other control device use command 914 to choose the condition you want:

To enable manual-set mode	Choose **1=Enable** in the **Data** field. When manual-set mode is enabled, the **DISABLE** button shows red.
To disable manual-set mode	Choose **0=Disable** in the **Data** field. When manual-set mode is disabled, the **ENABLE** button shows gray.

914	Set Manual Set Mode	XPR RS422 EtherCAT	Enables or disables Manual Set Mode
			Data: 1=Enable 0=Disable
			RS-422 example: >9141 cEF< >914c9E<
			EtherCAT example: X3000: 01 = 914 X3000: 03 = 1 (Enable) X3000: 0B = 1 (signal power source to act)

When manual-set mode is enabled, the cutting system automatically uses the process that is set in manual-set mode every time power is supplied to the cutting system and until that process is canceled or changed.

What to do next: If you want to change or cancel the settings, offsets, or detection modes for the active manual-set mode process, refer to Process selection on page 237.

Change the device that has control

Use these steps to make sure that the correct device has control of the plasma power supply.

The device that first sets a process controls the plasma power supply. For example, if the CNC sets the process first, all other devices that connect to the plasma power supply can only monitor the data.

If the **Client ID** and the **Operator ID** in the XPR web interface are the same on your device, you are in control of the plasma power supply.

1. Connect to the XPR web interface.

   Refer to Requirements for the XPR web interface on page 173.

2. Go to the **Other** screen.
3. Choose **Reset Operator**.

If the reset was successful, the **Operator ID** will show as none.

If the reset was not successful or if you do not have access to the XPR web interface, remove the power from the cutting system and then supply power to the cutting system.

What to do next: To select the device that has control of the plasma power supply, send a process.

Use ohmic contact sense

You can use internal or external ohmic contact sense. No action is necessary for internal ohmic contact sense. To use external ohmic contact sense, make the following modification to the ohmic wiring inside of the TorchConnect console.

When you work with ohmic contact sense, it helps to know the following conditions related to ohmic relays:

- The ohmic relay is open during ignition, when cutting with a water process, or when the remote on-off switch is in the OFF position.
- The ohmic relay is closed and ohmic contact is enabled if none of the above conditions are true.
- With external ohmic contact sense, the relay is still used to help isolate the ohmic circuit from high voltage.

1. Remove the power from the cutting system:
   a. Set the line-disconnect switch to the OFF position.
   b. Make sure that the power-indicator LED on the TorchConnect console is not illuminated.
2. Disconnect the ohmic wire from J3 on the ohmic PCB in the TorchConnect console.
3. Connect the ohmic wire that you removed from J3 to J4 pin 1.

4. Remove the plug from the sheet metal on the TorchConnect console.

   The plug is below the torch lead connection, as shown.

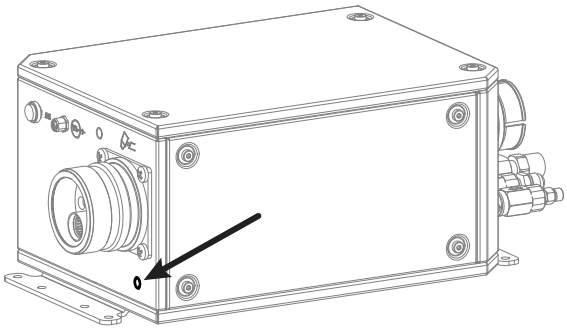

5. Put the external ohmic-sense circuit through the hole in the sheet metal on the TorchConnect console and then connect the external ohmic-sense circuit to J4 pin 2 on the ohmic PCB.

   Refer to Example of external ohmic contact sense on page 208.

Example of internal ohmic contact sense

Internal ohmic contact sense is the default installation for the torch and the TorchConnect console. No more steps are necessary.

Figure 55 - Example diagram of internal ohmic contact sense

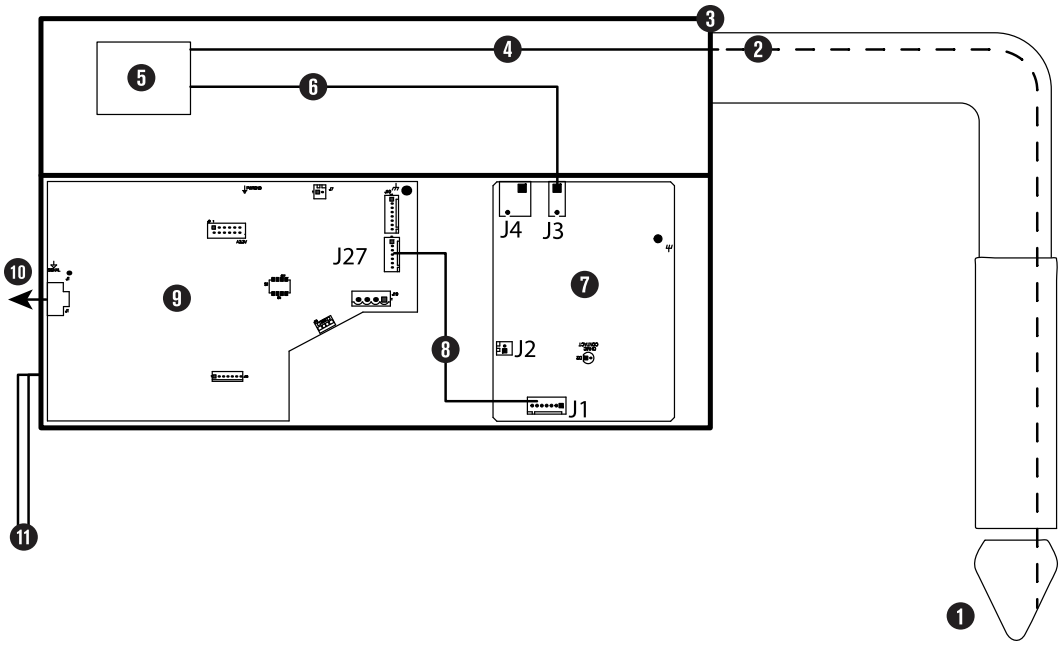

1 Torch

2 Ohmic wire, inside of torch and torch lead

Figure 55 - Example diagram of internal ohmic contact sense (continued)

3 TorchConnect console

4 Ohmic wire, torch receptacle to ohmic relay

5 Ohmic relay

6 Ohmic wire, ohmic relay to J3

7 Ohmic PCB

8 J1 to J27 wires

9 Control PCB

10 CAN connection

11 Two ground connections (mandatory)

Example of external ohmic contact sense

Refer to this example diagram if it is necessary to change the wiring inside of the TorchConnect console so that you can use external ohmic contact sense.

Figure 56 - Example diagram of external ohmic contact sense

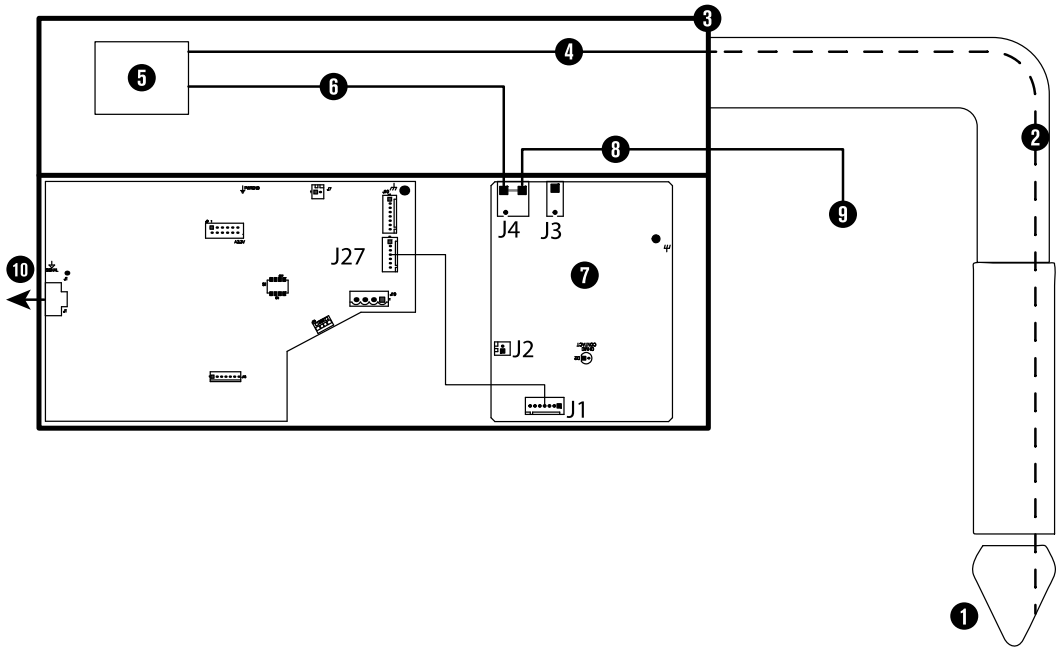

1 Torch

2 Ohmic wire, inside of torch and torch lead

3 TorchConnect console

Figure 56 - Example diagram of external ohmic contact sense (continued)

4 Ohmic wire, torch receptacle to ohmic relay

5 Ohmic relay

6 Ohmic wire, ohmic relay to J4

7 Ohmic PCB

8 Ohmic wire, J4 to torch lifter or third-party ohmic circuit: pin 1 and pin 2 are connected in the ohmic PCB

9 Torch lifter or third-party ohmic circuit

10 CAN connection

11 Ohmic wire, J4 to torch lifter or third-party ohmic circuit: pin 1 and pin 2 are connected in the ohmic PCB, one ground connection (mandatory)

12 Torch lifter or third-party ohmic circuit

Install a remote on-off switch

As an alternative to using the main power source, do these steps to install your own remote on-off switch so that you can control power to the gas connect console, TorchConnect console, and other parts.

⚠ WARNING



ELECTRIC SHOCK CAN KILL

The plasma power supply contains dangerous electric voltages that can seriously injure or kill you. Even if the plasma power supply is turned OFF, you can still get a serious electric shock if the plasma power supply remains connected to an electric power source.

Use extreme caution if you do diagnosis or maintenance tasks when the plasma power supply remains connected to an electric power source and the outer cover or panels are removed. All work that requires removal of the plasma power supply outer cover or panels must be done by a qualified technician. Refer to the *Safety and Compliance Manual (80669C)* for more safety information.

1. Remove the jumper from pin 1 and pin 2 of the J14 connector.

   For the pinout of J14, refer to Pinouts for the discrete interface cables on page 159.

2. Install your own interface.

Use the examples in Examples of input circuits on page 213 and Examples of output circuits on page 210 to design your circuit.

When the remote on-off switch is set to OFF (disabled), electric power stays ON (active) to the following parts:

- Power-indicator LED on the front of the plasma power supply
- Control PCB
- Control transformer (can be different on input and output)
- 24 V power source
- 120 VAC on the power distribution PCB
- 220 VAC on the power distribution PCB
- 120 VAC to the input side of the 48 V power relay

Examples of output circuits

If it is necessary to design your own circuit to use the remote on-off feature, you can refer to these output circuit diagrams as examples.

There are three types of interfaces for output circuits. Be careful not to use an incorrect circuit.

It is the responsibility of the system integrator to make sure that circuit designs obey all applicable national and local codes.

Logic interface, active high

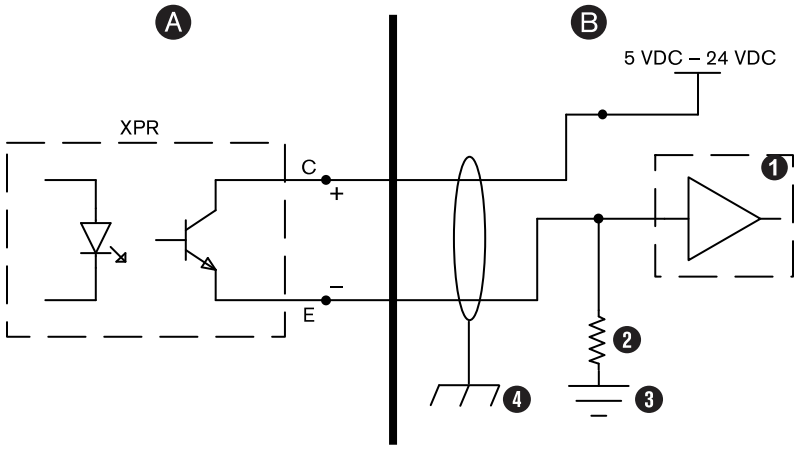

A XPR

B CNC

1 5 VDC – 24 VDC

2 10 kΩ (optional)

3 High-impedance (≤ 10 mA)

4 Shielded cable connected to chassis or earth ground

Logic interface, active low

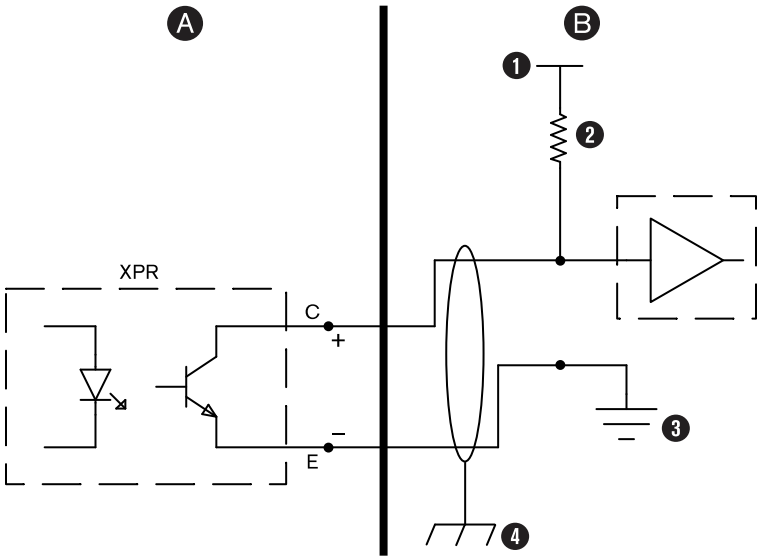

A XPR

B CNC

1 5 VDC – 24 VDC

2 10 kΩ (optional)

3 High-impedance (≤ 10 mA)

4 Shielded cable connected to chassis or earth ground

Relay interface

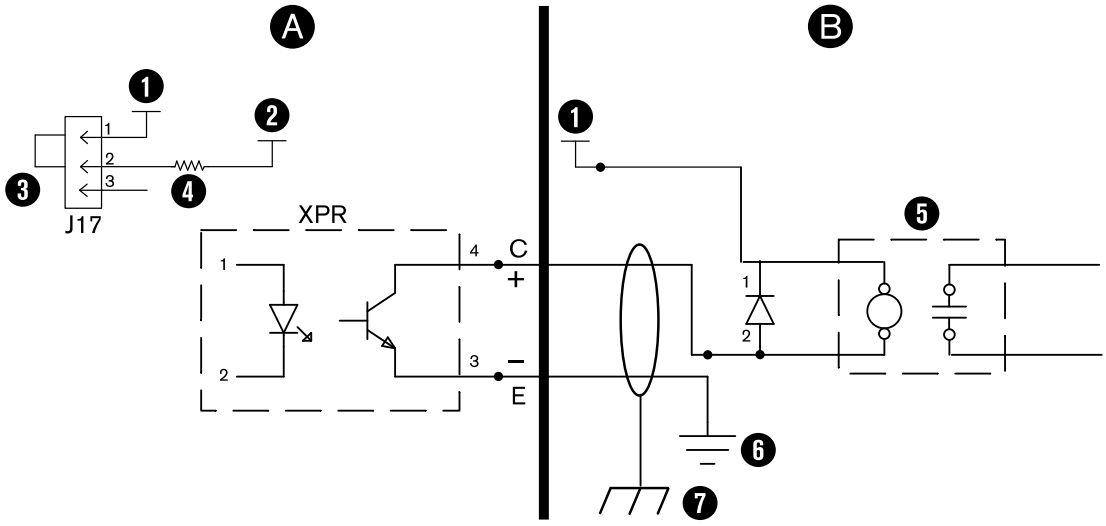

A XPR

B CNC

1 CNC +24V

2 +24 V

3 Install a jumper (108056)

4 °t = temperature (200 mA resettable fuse)

5
- External relay
- 24 VDC low-power coil
- ≤ 10 mA or ≥ 2400 Ω
- For all relay coils it is necessary to have a freewheeling diode across the relay coil.

6 Power ground

7 Shielded cable connected to chassis or earth ground

This circuit voids the warranty. Do not use.

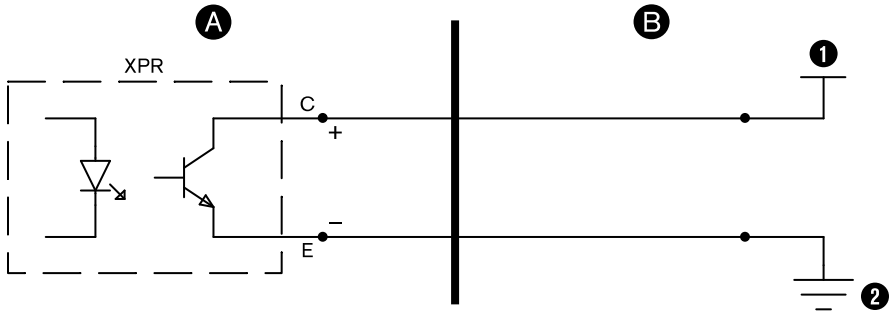

A XPR

B CNC

1 Any voltage

2 Power ground

Examples of input circuits

If it is necessary to design your own circuit to use the remote on-off feature, you can refer to these input circuit diagrams as examples.

There are three types of interfaces for input circuits.

It is the responsibility of the system integrator to make sure that circuit designs obey all applicable national and local codes.

Relay interface

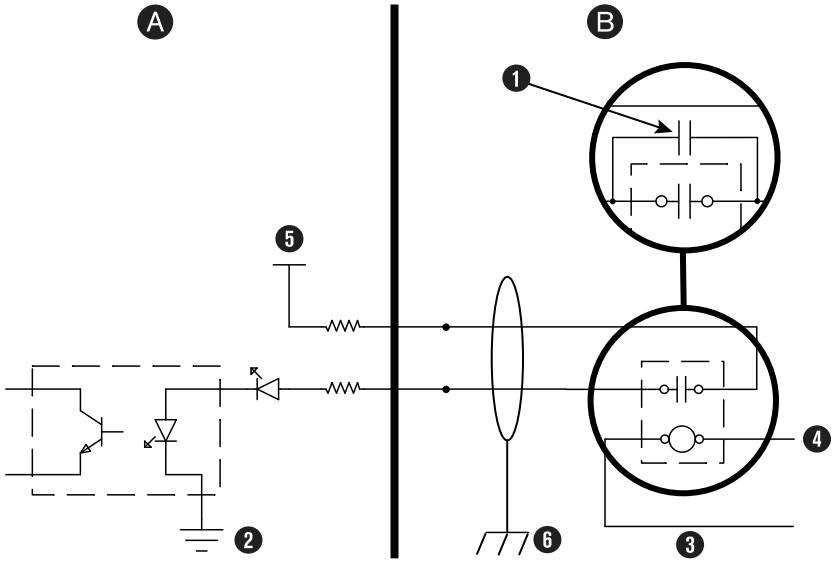

A XPR

B CNC

1 The life of the external relay can be extended if you add a resistor-capacitor series in parallel with the relay contacts. A metalized-polyester capacitor – 0.022 µF 100 V or higher – is a good example.

2 Power ground

3 External relay (AC or DC)

4 Output from CNC

5 +24 VDC

6 Shielded cable connected to chassis or earth ground

Optocoupler interface

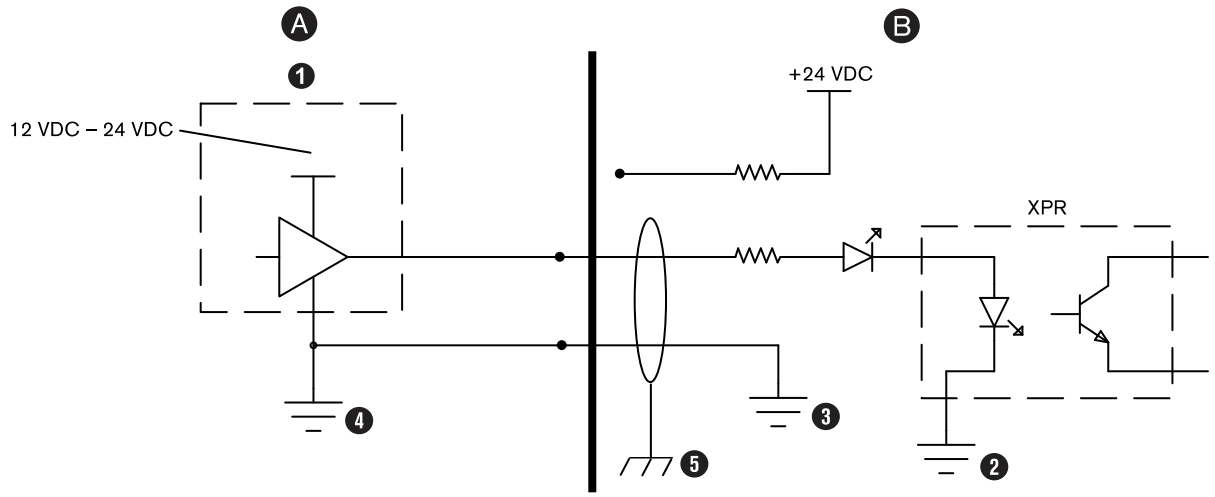

A CNC

B XPR

1 +24 VDC

2 Power ground

3 Transistor-output optocoupler (1 of 2)

4 Transistor-output optocoupler (2 of 2)

5 Shielded cable connected to chassis or earth ground

Amplified-output interface

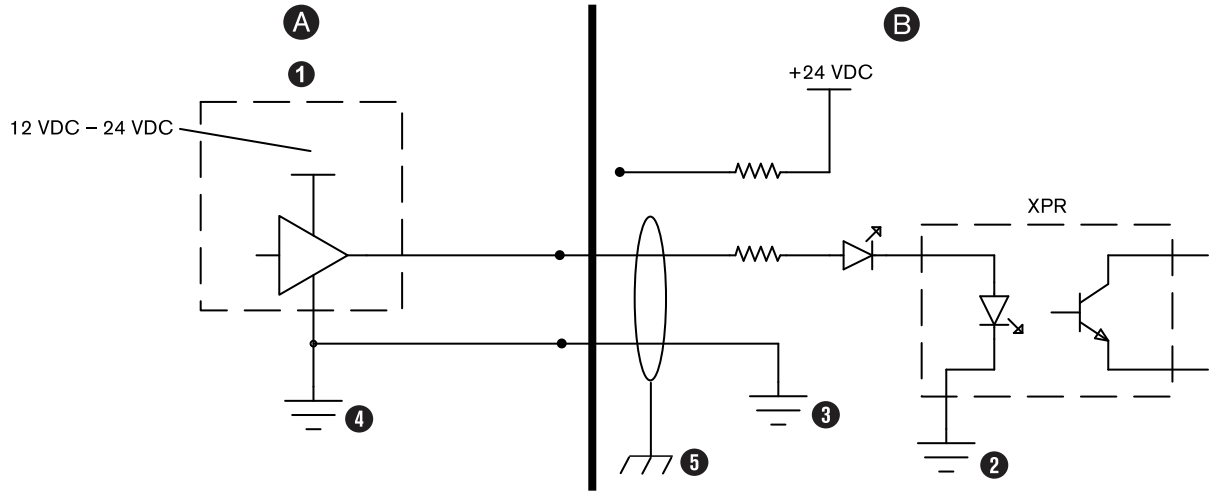

A CNC

B XPR

1 +24 VDC

2 CNC ground

3 Active-high drive

4 CNC 12 VDC – 24 VDC

5 Shielded cable connected to chassis or earth ground

Redundant remote on-off interface

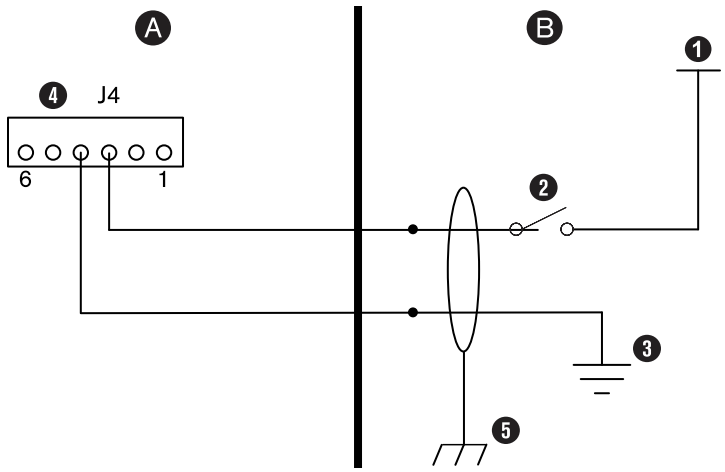

A XPR

B CNC

1 +24 V

2 Switch

3 Ground

4 XPR redundant remote on-off input

5 Shielded cable connected to chassis or earth ground

Install a redundant remote on-off switch

Do these steps if you want to use the redundant remote on-off switch.

⚠ WARNING



ELECTRIC SHOCK CAN KILL

The plasma power supply contains dangerous electric voltages that can seriously injure or kill you. Even if the plasma power supply is turned OFF, you can still get a serious electric shock if the plasma power supply remains connected to an electric power source.

Use extreme caution if you do diagnosis or maintenance tasks when the plasma power supply remains connected to an electric power source and the outer cover or panels are removed. All work that requires removal of the plasma power supply outer cover or panels must be done by a qualified technician. Refer to the *Safety and Compliance Manual (80669C)* for more safety information.

A feature of the expansion PCB is that it offers redundancy to a single remote on-off switch.

Before you begin:

- A 24 VDC (50 mA) and return (GND) from the CNC or controlling device to the expansion PCB are necessary for redundant remote on-off.
- Use a separate discrete cable between the redundant remote on-off input and the main control PCB.

1. On the 141545 main control PCB, move the jumper from pin 1 and pin 2 of the J27 connector to pin 2 and pin 3.
2. Supply 24 V power from the CNC or controlling device to J4 pin 3 of the expansion PCB.
3. Install a return (GND) from the CNC or controlling device to J4 pin 4 of the expansion PCB.

When the redundant remote on-off feature is selected, signals from two remote on-off switches are necessary for the plasma power supply to work.

When the redundant remote on-off switch is set to OFF (disabled), electric power stays ON (active) to the following parts:

- Power-indicator LED on the front of the plasma power supply
- Control PCB
- Control transformer (can be different on input and output)
- 24 V power source
- 120 VAC on the power distribution PCB
- 220 VAC on the power distribution PCB
- 120 VAC to the input side of the 48 V power relay

5 Coolant Installation

Overview of cutting system coolant

The cutting system ships **without** coolant in the reservoir. Before you operate the cutting system, you must fill it with coolant.

The coolant capacity for the plasma cutting system is between 22.7 liters – 45.4 liters (6 U.S. gallons – 12 U.S. gallons). The coolant reservoir can contain a maximum of 15.1 liters (4 U.S. gallons). But when the plasma cutting system is fully installed, it can contain between 22.7 liters – 45.4 liters (6 U.S. gallons – 12 U.S. gallons).

More coolant is necessary for a cutting system with long leads than for a cutting system with short leads.



Speak to your cutting machine supplier to send an order for more coolant. For information about how to calculate the approximate total volume of coolant for your cutting system, refer to Make an estimate of the total coolant volume on page 277.

The cutting system ships with the coolant filter and coolant-pump screen installed. Additional coolant filters and screens are available. Refer to the *Parts List*.



For information about how to install a replacement coolant filter or coolant-pump screen, refer to the *XPR Preventative Maintenance Program (PMP) Instruction Manual (809490)*.

Fill the cutting system with coolant

Use the correct amount and type of coolant mixture to help prevent damage to the cutting system.

NOTICE

LOW COOLANT LEVELS CAN DAMAGE THE CUTTING SYSTEM AND COOLANT PUMP

There is a risk of serious damage to the cutting system and to the coolant pump if you operate the cutting system with no coolant or with low coolant. If your coolant pump is damaged, pump replacement can be necessary.

Never operate the cutting system if you get a low coolant level notice.

NOTICE

AUTOMOTIVE ANTIFREEZE CAN CAUSE DAMAGE TO THE TORCH COOLANT SYSTEM

Antifreeze contains chemicals that can cause damage to the torch coolant system.

Never use automotive antifreeze as an alternative to Hypertherm coolant.

NOTICE

USE THE CORRECT COOLANT

If you use an incorrect coolant, it can cause damage to the cutting system.

Refer to the coolant requirement specifications for your plasma cutting system.

Before you begin:

- Calculate the correct percentage of propylene glycol to add in the premixed Hypertherm coolant (028872).
- Refer to Coolant requirements on page 57.

1. Remove the power from the cutting system:
    a. Set the line-disconnect switch to the OFF position.
    b. Make sure that the power-indicator LED on the plasma power supply is not illuminated.
2. Make sure that you have the correct coolant mixture for your cutting system.
3. Remove the cap from the reservoir inlet on top of the plasma power supply.

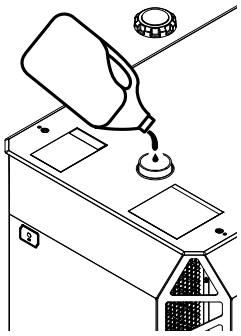

4. If the coolant is below the inlet, add the coolant in the reservoir until the coolant is at base of the inlet.

⚠ CAUTION



WET FLOOR

If you put too much coolant in the reservoir, the coolant can spill onto the floor. Coolant can cause floors to become slippery.

Be careful not to put too much coolant in the reservoir.

5. Install the cap onto the coolant reservoir.
6. Supply the power to the cutting system:
   a. Set the line-disconnect switch to the ON position.
   b. Make sure that the remote on-off switch is in the ON position.
   c. Make sure that the green power-indicator LED is illuminated on the plasma power supply.

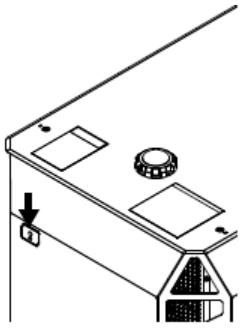

7. Use the CNC or XPR web interface to send a process to the plasma power supply and start the coolant pump.
   - □ When you send a process, the gases start to flow, and after a few seconds the coolant pump starts.

- ☐ If the pump stops, it is necessary to purge the air out of the coolant loop.
- ☐ Use the remote on-off switch to start and stop the coolant pump until the pump continues to run.

8. If necessary, add more coolant to fill the reservoir to the base of the reservoir inlet.

What to do next: After you add the coolant, use the CNC or XPR web interface to cancel the low-coolant diagnostic code or select a process.

6 Operation

CNC controls and display

A CNC controls cutting system operation.

The CNC has the following functions:

- Executes part programs from Computer-aided Design (CAD) and Computer-aided Manufacturing (CAM) software.
- Sends commands to the cutting system through a CNC interface cable (or wireless connection) between the CNC (or wireless device) and the plasma power supply.
- Adapts to feedback signals it receives from the cutting system or operator.

Some cutting system commands, settings, and displays can be seen and controlled from different CNC screens.

The power-indicator LED shows power status. All other visual indications of cutting system performance show on the CNC or the XPR web interface.

CNC interfaces can include these screens:

- Main (control) screen
- Process setup screen
- Diagnostic screen
- Test screen
- Cut chart screen



Refer to the instruction manual for your CNC for descriptions of CNC screens.

For information about how to use the CNC to control cutting system operation, refer to:

- The instruction manual for your CNC
- *CNC Communication Protocol for the XPR Cutting System (809810)*

Wireless device controls

You can use a wireless device to set up and monitor the plasma cutting system.

A wireless device with the XPR web interface sends commands to the XPR cutting system through a wireless connection between the wireless device and the plasma power supply.

Some cutting system commands, settings, and displays can be seen and controlled from different XPR web interface screens. For information on these screens, refer to Web interface screen information on page 184.

For information about how to set up a wireless device with the XPR web interface, refer to Requirements for the XPR web interface on page 173.

Power-indicator LEDs

An LED illuminates to show the power status on the plasma power supply and on other system components.

The power-indicator LED on the plasma power supply uses two colors to indicate power status:

- The LED illuminates amber when the plasma power supply is receiving electric power and the remote on-off switch is in the OFF position.
- The LED illuminates green when the plasma power supply is receiving electric power and the remote on-off switch is in the ON position.
- The plasma power supply that came with early XPR cutting systems has a green-only power-indicator. A power-indicator LED upgrade kit (428893) is available from Hypertherm if you want a two-color LED for your plasma power supply.



If the redundant remote on-off switch is enabled, make sure that it has the same ON or OFF condition as the remote on-off switch. Refer to Install a redundant remote on-off switch on page 215.

Figure 57 - Power-indicator LED on an example plasma power supply

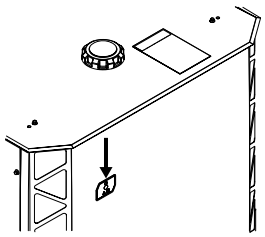

When illuminated, the green power-indicator LED on other components is an indication that:

- Power is supplied to the XPR cutting system.
- The line-disconnect switch or breaker for the component is set to the ON (I) position.
- The component can be used.

Figure 58 - Power-indicator LED locations on other components

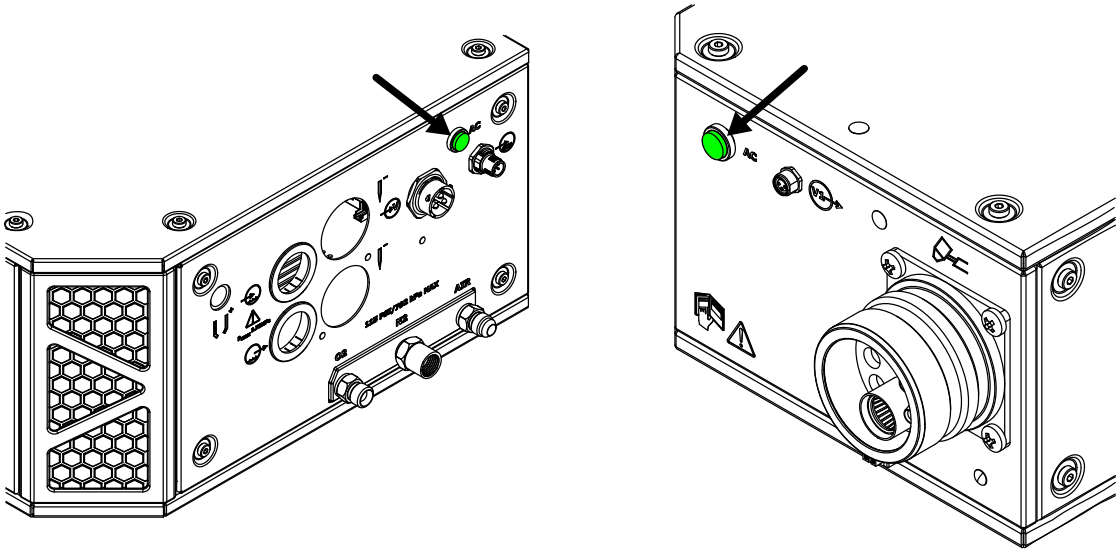

Sequence of operation

A set of flowchart images shows the sequence of operation for the plasma cutting system.

Each state of operation is given a unique name and number so that it can be identified. The type of name that you see (name or number) is specified in your cutting system settings.

Power-up state (1)

The Power-up state (1) process starts when the operator sets the remote on-off switch for the plasma cutting system to the ON position and the redundant remote on-switch (if enabled) to the ON position.

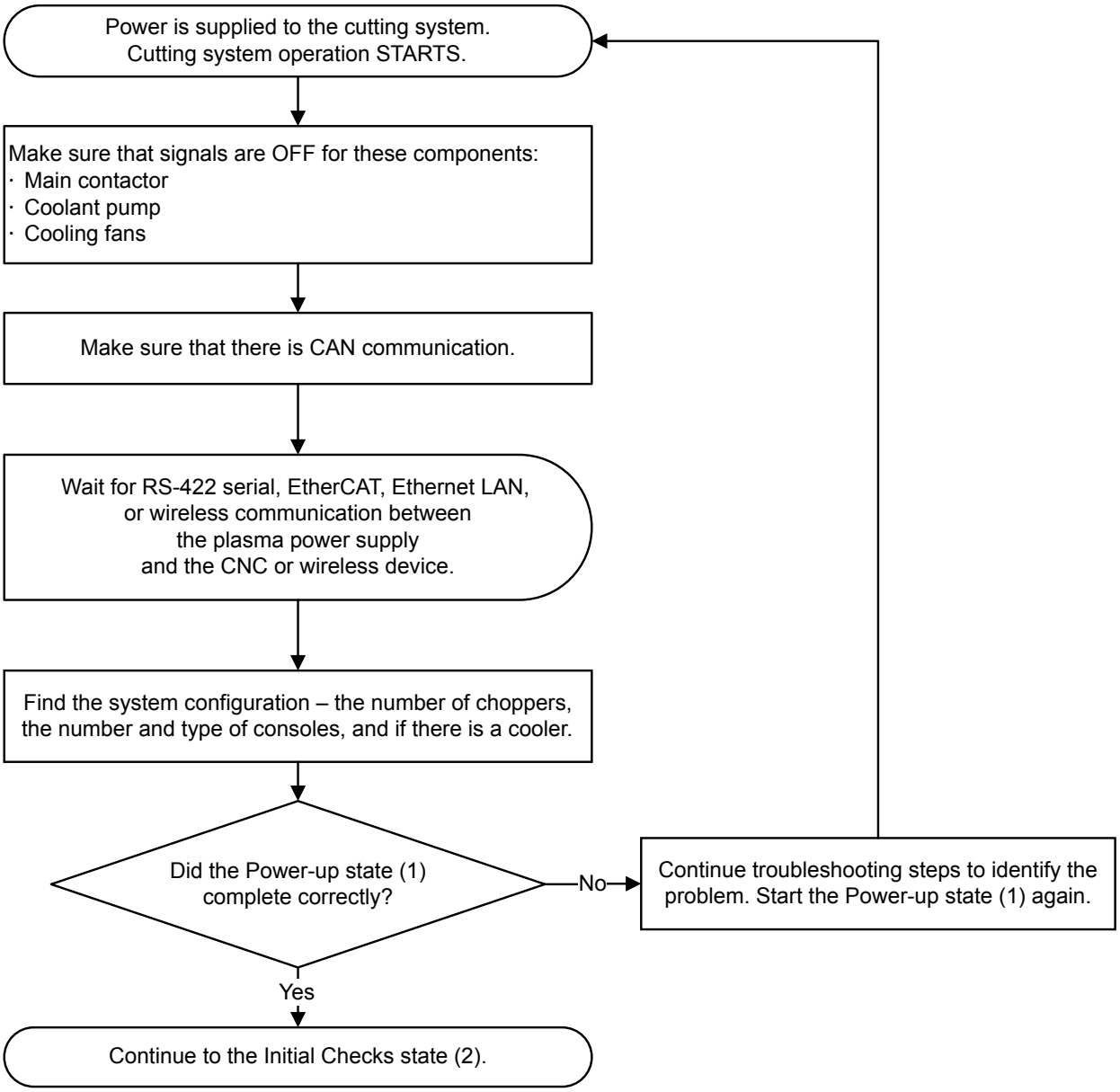

If the Power-up state (1) completes correctly, the process continues with Initial Checks state (2) on page 224.

Refer to Initial inspection steps on page 287 for troubleshooting procedures.

Initial Checks state (2)

During the Initial Checks state (2), the system looks for diagnostic codes and gets temperature and inlet pressure measurements.

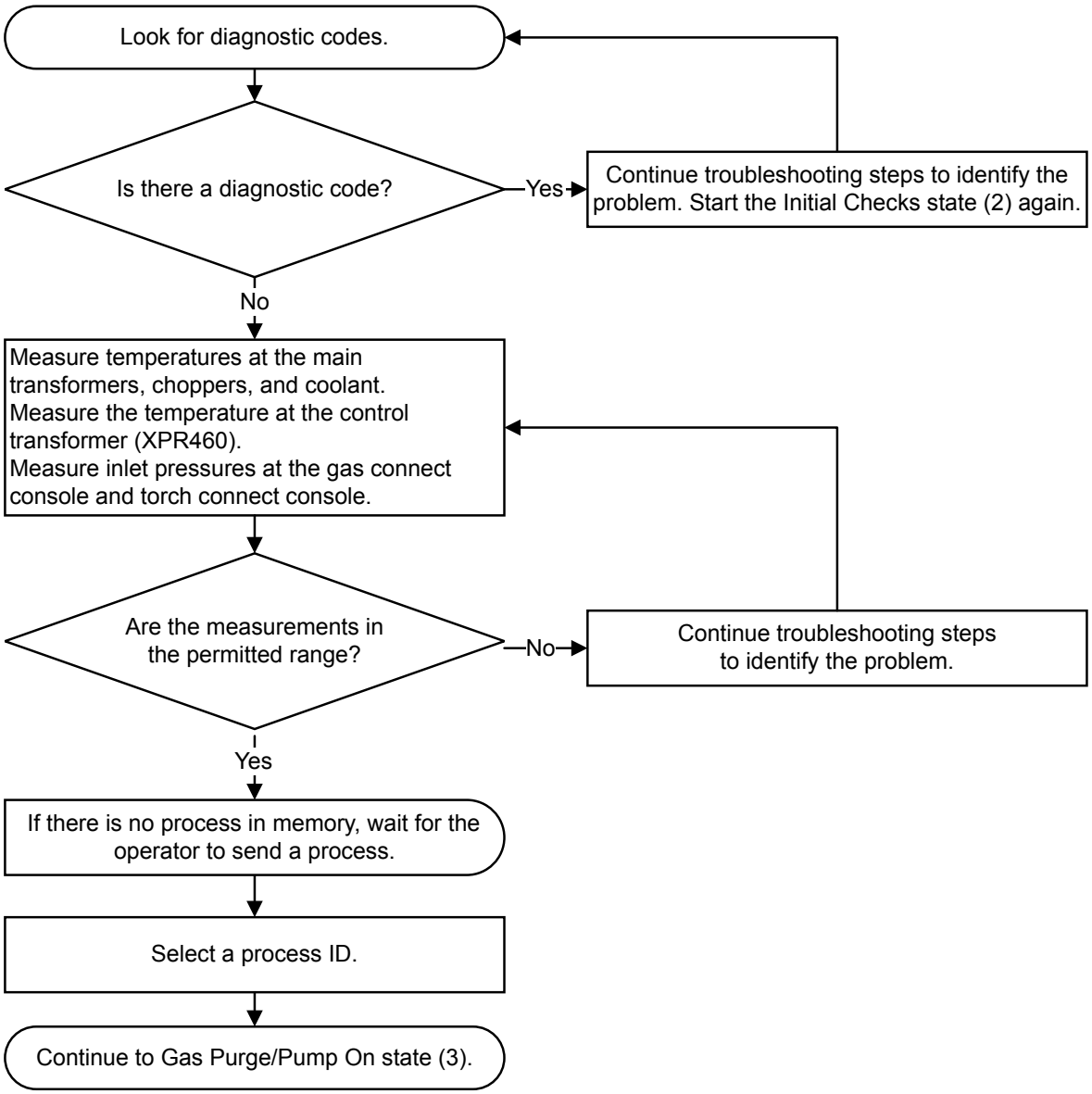

If the Initial Checks state (2) completes correctly, the process continues with Gas Purge/Pump On state (3) on page 225.

Refer to Initial inspection steps on page 287 for troubleshooting procedures.

Gas Purge/Pump On state (3)

During the Gas Purge/Pump On state (3), the system does a specialty purge of gases and coolant and then does a check of the coolant flow.

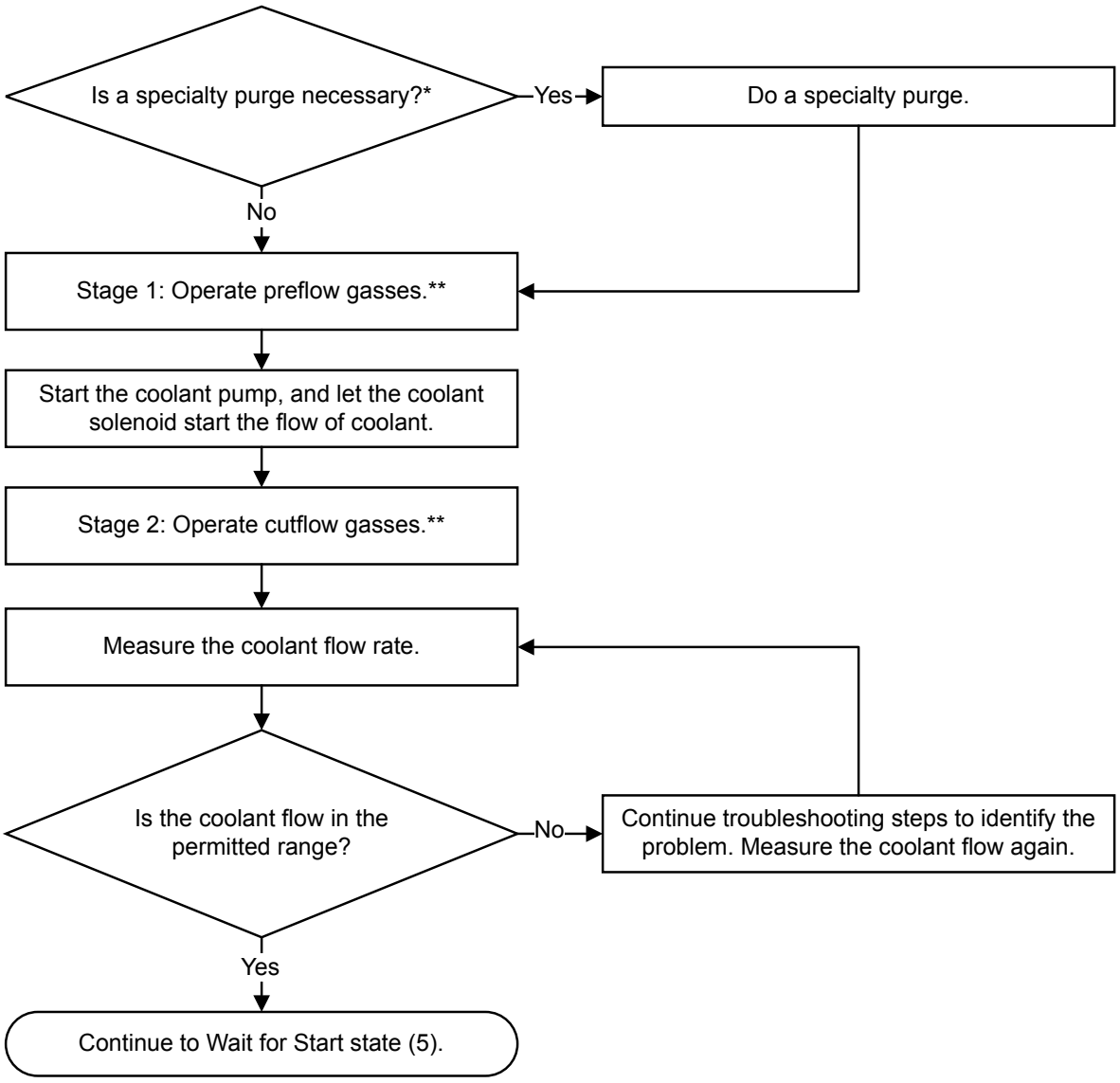

* A specialty purge (with N_2 or air) occurs automatically if the process changes from a non-mixed-fuel gas to a mixed-fuel gas or F5 process (or the opposite).

- If the process that was sent before was a water (H_2O) process, a water purge is added to the gas purge. Refer to Automatic purges on page 235.
- If the process that was sent before was not an H_2O, mixed-fuel gas, or F5 process, do the usual two-step gas purge.

** These conditions have an effect on the time that is necessary to complete a purge:

- The type of operator-selected process that the CNC or wireless device sends to the cutting system
- If this is the first process sent after the Power-up state (1) starts
- The type of operator-selected process that was sent before

If the Gas Purge/Pump On state (3) completes correctly, the process continues with Wait for Start state (5) on page 227.

Refer to Initial inspection steps on page 287 for troubleshooting procedures.

Wait for Start state (5)

During the Wait for Start state (5), the CNC sends the Plasma Start command to the cutting system.

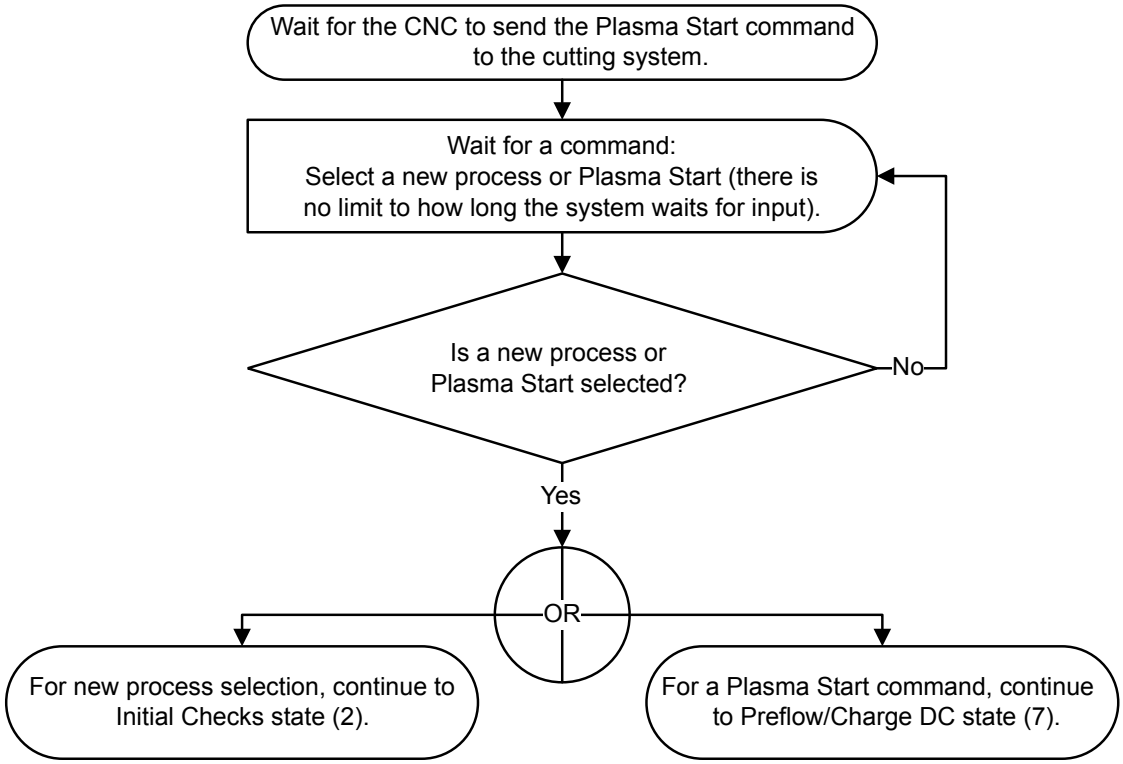

If the Wait for Start state (5) completes correctly, the process continues with:

- Initial Checks state (2) on page 224 for a new process selection
- Preflow/Charge DC state (7) on page 227 for a Plasma Start command

Refer to Initial inspection steps on page 287 for troubleshooting procedures.

Preflow/Charge DC state (7)

During the Preflow/Charge DC state (7), the system starts some internal components and measures the gas pressure.

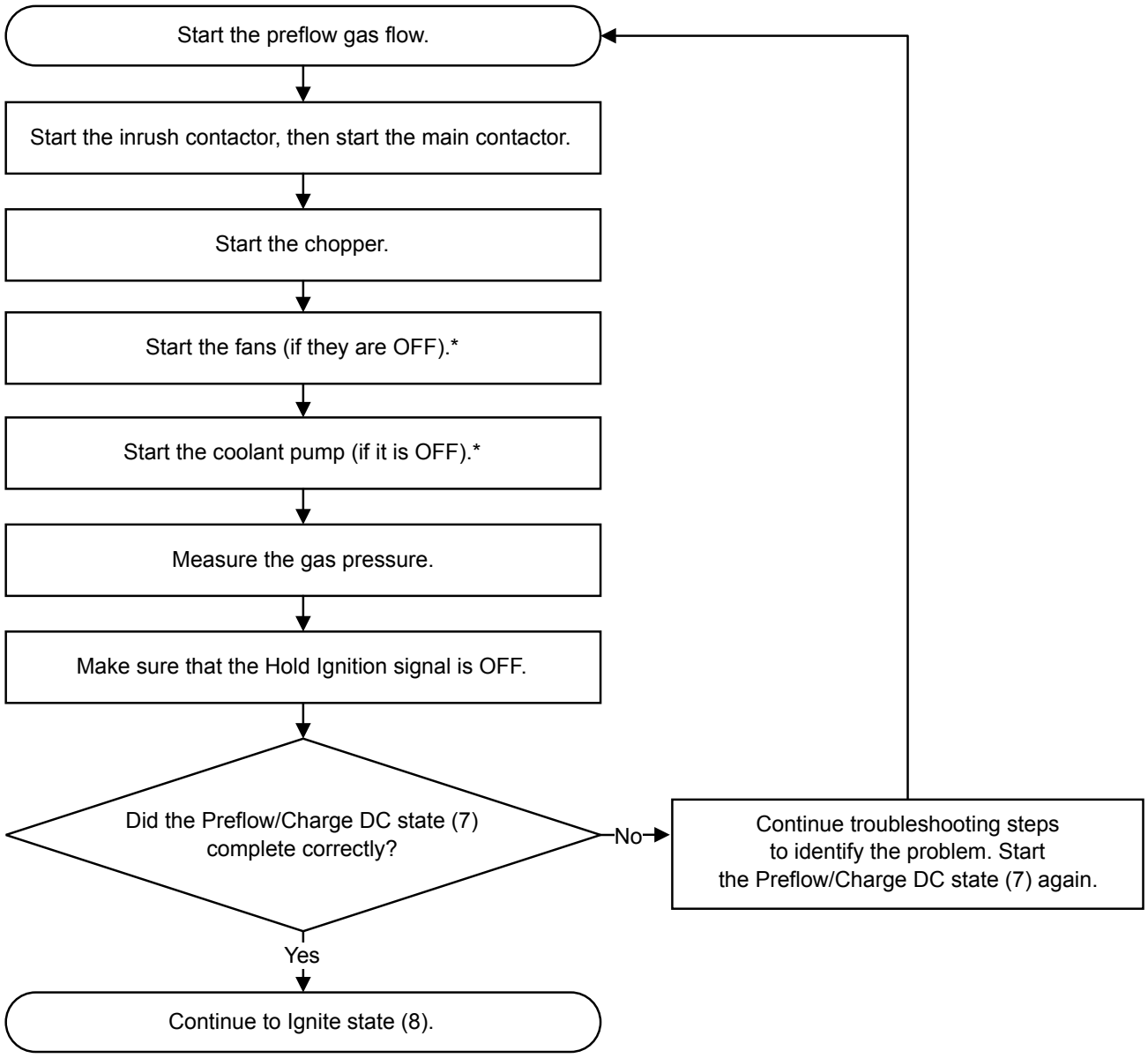

* To increase energy preservation, the coolant pump and fans stop after the time limit is expired without a command.

If the Preflow/Charge DC state (7) completes successfully, the process continues with Ignite state (8) on page 228.

Refer to Initial inspection steps on page 287 for troubleshooting procedures.

Ignite state (8)

During the Ignite state (8), the system does a check for correct gas pressures, DC bus voltage, and chopper current. The Ignite state (8) must be completed in 500 milliseconds or less.

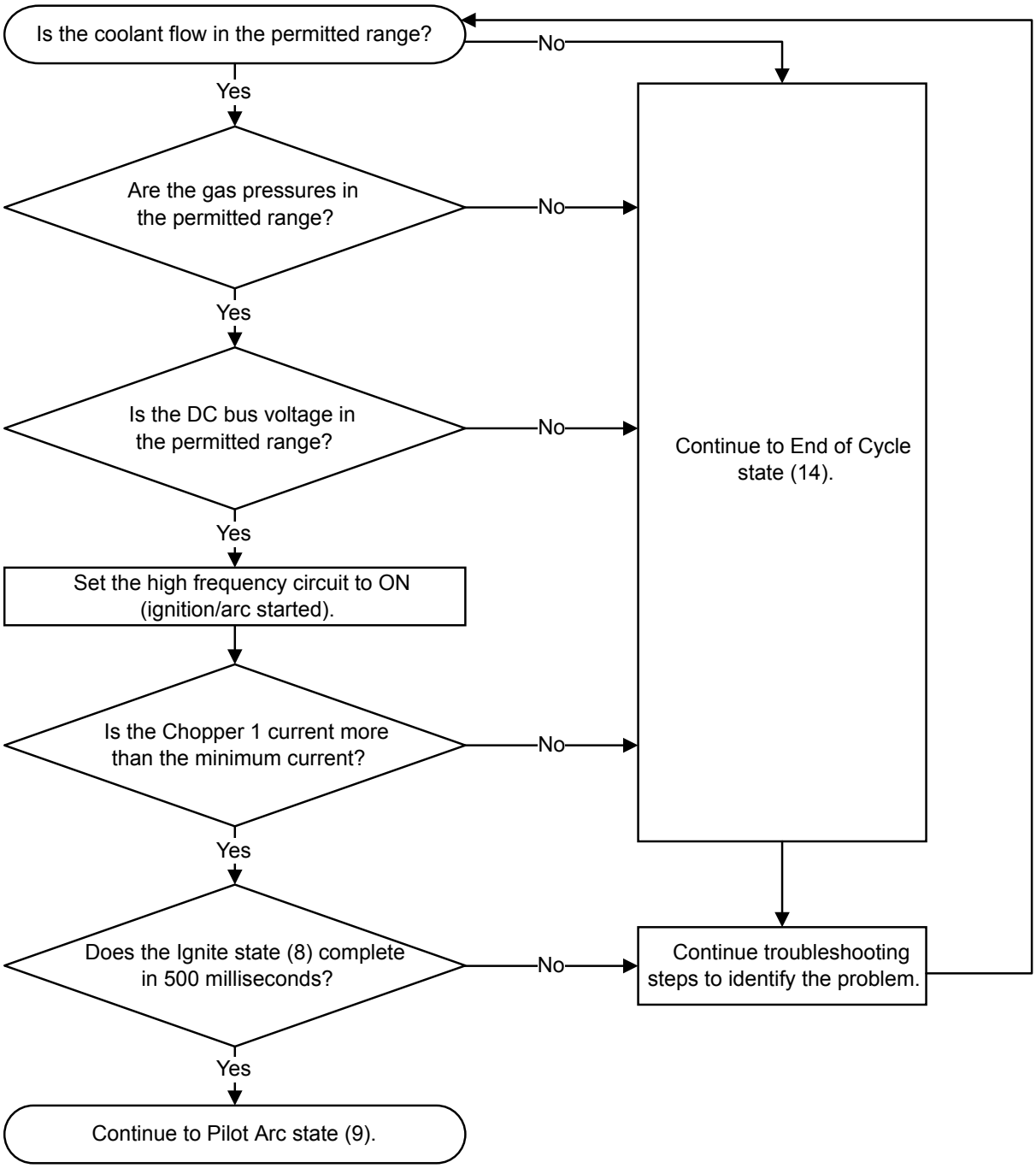

- If the Ignite state (8) completes correctly, the process continues with Pilot Arc state (9) on page 230.
- If one or more of these measurements is not correct, the process continues with End of Cycle state (14) on page 234:
  - Coolant flow
  - Gas pressure
  - DC bus voltage

- Chopper current

- If the Ignite state (8) does not complete in 500 milliseconds, continue troubleshooting steps to identify the problem.

Refer to Initial inspection steps on page 287 for troubleshooting procedures.

Pilot Arc state (9)

During the Pilot Arc state (9), the system does a check for correct coolant flow, gas pressures, temperatures, DC bus voltage, chopper current, and work cable current. The Pilot Arc state (9) must be completed in 500 milliseconds or less.

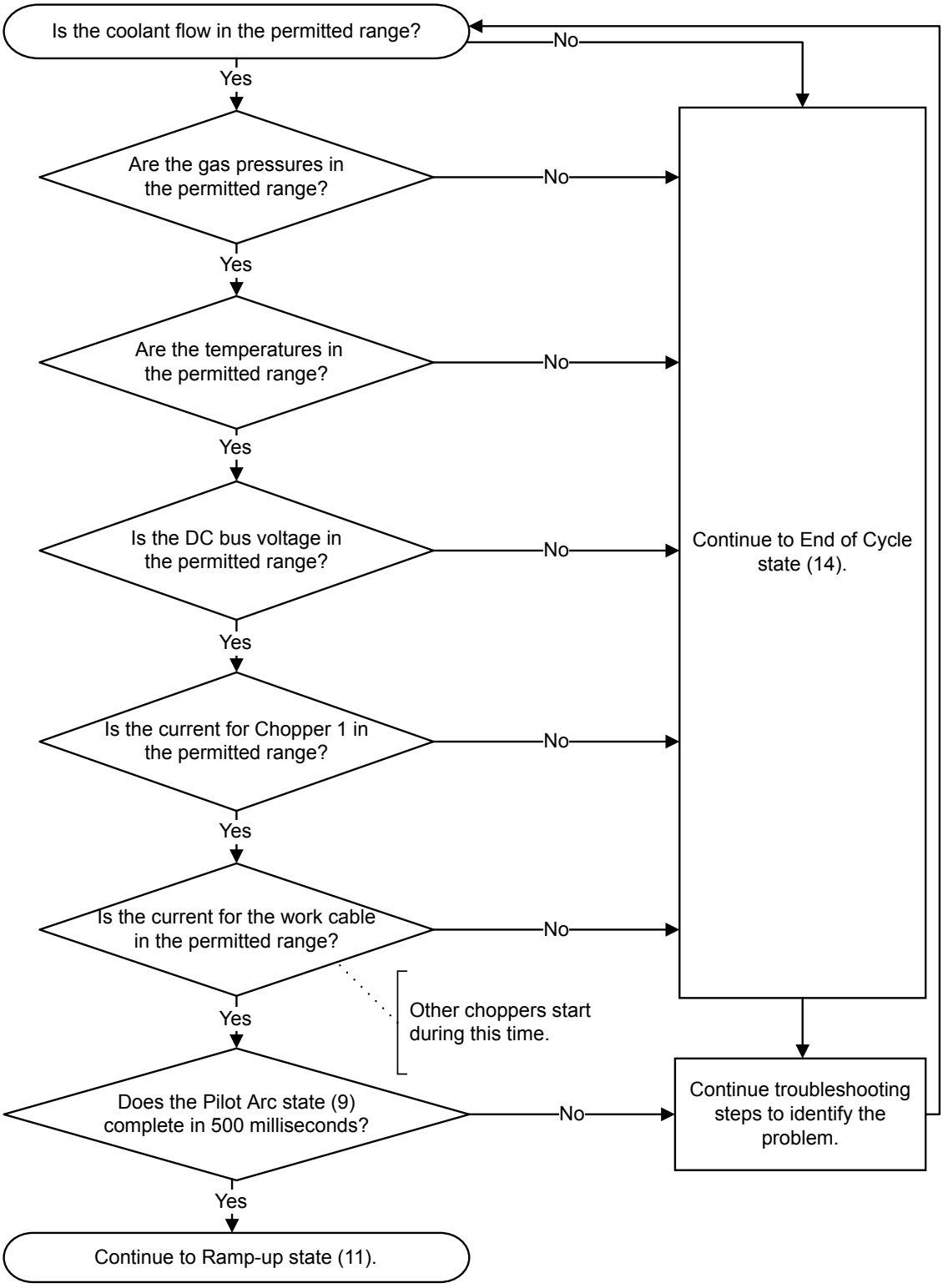

- If the Pilot Arc state (9) completes correctly, the process continues with Ramp-up state (11) on page 232.

- If one or more of these measurements is not correct, the process continues with End of Cycle state (14) on page 234:
  - Coolant flow
  - Gas pressure
  - Temperature
  - DC bus voltage
  - Chopper current
  - Work cable current
- If the Pilot Arc state (9) does not complete in 500 milliseconds, continue troubleshooting steps to identify the problem.

Refer to Initial inspection steps on page 287 for troubleshooting procedures.

Ramp-up state (11)

During the Ramp-up state (11), the system increases current and gas flow to the correct setpoints.

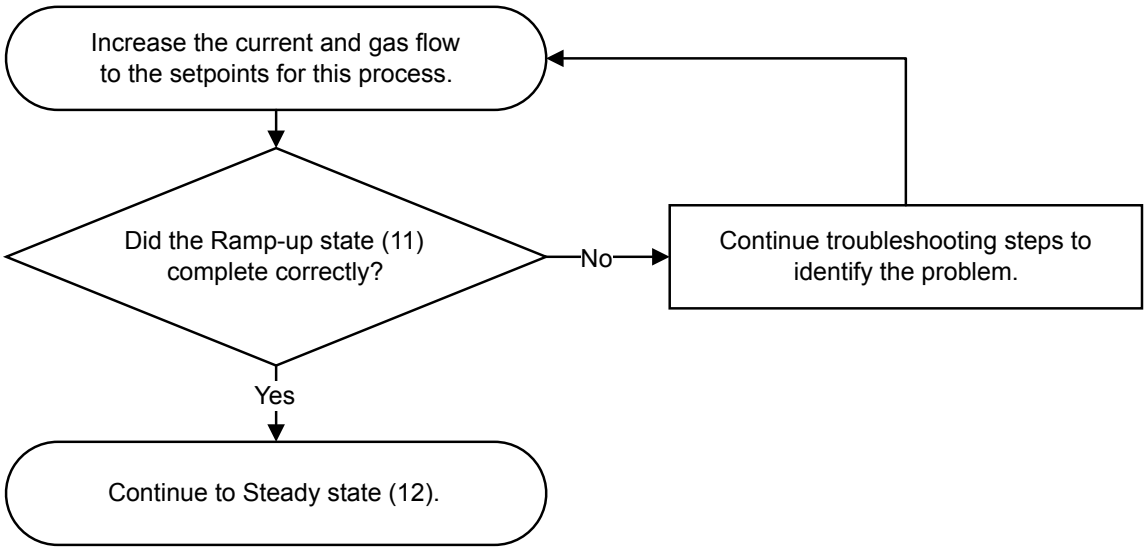

If the Ramp-up state (11) completes correctly, the process continues with Steady state (12) on page 233.

Refer to Initial inspection steps on page 287 for troubleshooting procedures.

Steady state (12)

During the Steady state (12), the system does a check for correct coolant flow rate, gas pressures, temperatures, and chopper currents. It also does a check for the Plasma Start signal to be removed for the selected process.

The Steady state (12) uses the process that was sent by the operator (piercing, marking, or cutting).

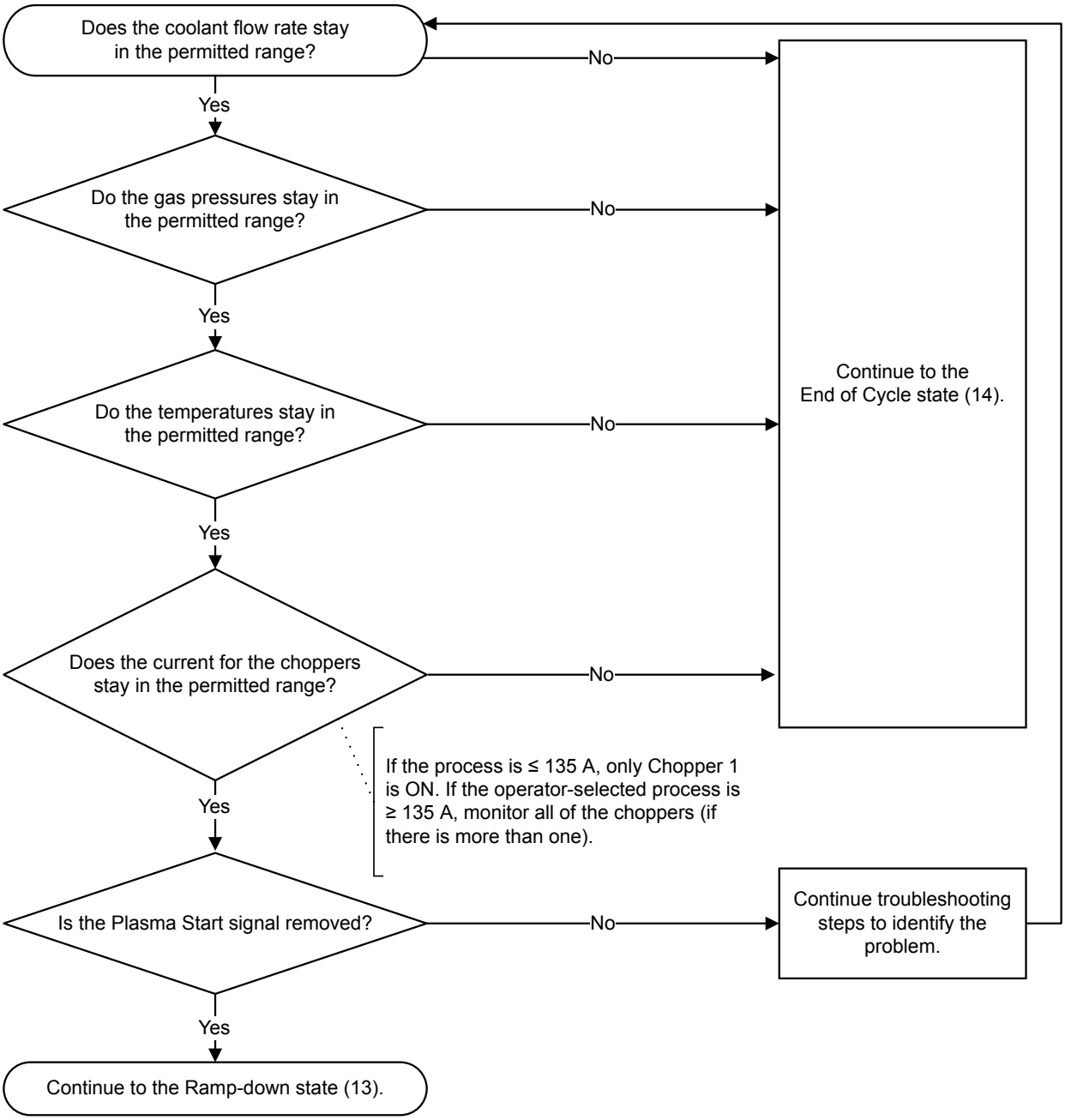

If the Steady state (12) completes correctly, the process continues with Ramp-down state (13) on page 234.

Refer to Initial inspection steps on page 287 for troubleshooting procedures.

Ramp-down state (13)

The Ramp-down state (13) starts when the CNC removes the Plasma Start command.

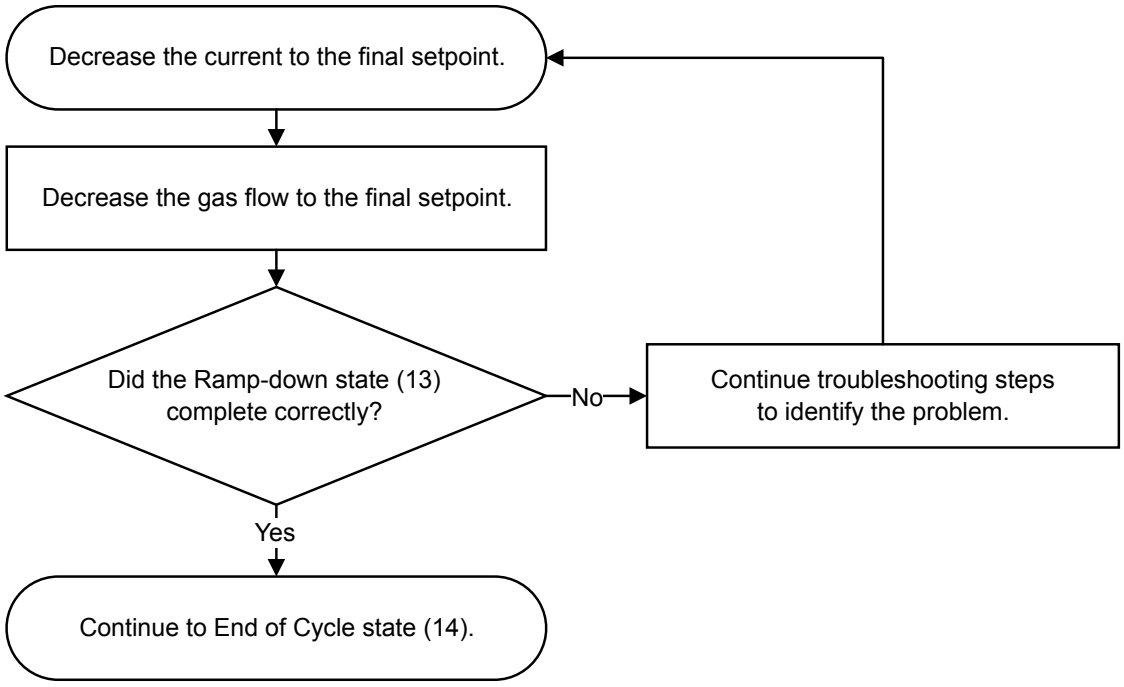

If the Ramp-down state (13) completes correctly, the process continues with End of Cycle state (14) on page 234.

Refer to Initial inspection steps on page 287 for troubleshooting procedures.

End of Cycle state (14)

The End of Cycle state (14) stops the choppers and gas flows. It also starts timers to stop the fans and the coolant pump.

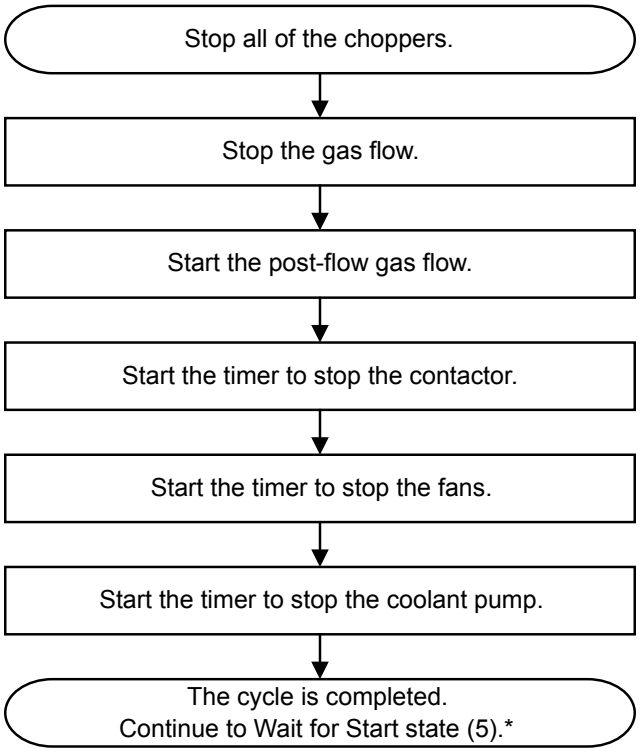

* After an operator-selected process completes correctly, the cutting system goes back to Wait for Start state (5) on page 227 to wait for the next command.

Refer to Initial inspection steps on page 287 for troubleshooting procedures.

High-voltage relay stages in the ohmic circuit

During a wet process – for example, N_2/H_2O – water can be a current path for the ohmic-sense circuit.

To prevent the flow of current to the ohmic PCB, the cutting system automatically opens the high-voltage relay and disables the ohmic-sense circuit.

Ohmic sensing for the N_2/H_2O process is available in cutting systems with firmware that is version L or later. Stall force is necessary when the N_2/H_2O process is used underwater.

During a dry process, the cutting system closes the high-voltage relay and enables the ohmic-sense circuit (except during high-frequency starts).

Automatic purges

Plasma cutting system purges are automatic.

The system looks at these conditions to select the type of purge to do:

- The process that is selected now
- The process that was selected before
- The type of gas connect console:
    - OptiMix and VWI cutting systems do both gas-change purges and process-setup purges.
    - CorePlus and Core cutting systems do only process-setup purges.

The system uses these conditions to calculate the length of time that is necessary to complete a purge:

- The type of operator-selected process
- If the active process is the first process that was sent after the Power-up state

Gas-change purges for OptiMix or VWI cutting systems

If your cutting system has an OptiMix or VWI gas connect console, a plasma-gas purge can occur automatically.

A plasma-gas purge can occur automatically when the cutting system changes from:

- A non-mixed-fuel gas process to a mixed-fuel gas (H_2-mix)
- A mixed-fuel gas (H_2-mix) or F5 to a non-mixed-fuel gas process

The type of plasma gas used for the purge is different for different cutting system configurations:

- OptiMix cutting systems use a two-phase gas-change purge that includes N_2.
- VWI cutting systems use a two-phase gas-change purge that includes air.

The following steps occur automatically for a plasma-gas purge:

1 The mixed-fuel gas (H_2-mix) or F5 drains from the plasma cutting system through the torch.

2 For an OptiMix cutting system, N_2 removes residual mixed-fuel gas.

3 For a VWI cutting system, air removes residual F5 gas from the torch lead.

A shield purge can be necessary in some conditions:

- If a process changes from a wet process to a dry process, a shield-fluid purge is used.
- During a shield-fluid purge, N_2 removes residual water from the shield gas/fluid hose.
- A wet process uses water as a shield fluid. A dry process does not use water as a shield fluid.



Core and CorePlus cutting systems use only process-setup purges. They do not use gas-change purges.

Process-setup purges for all plasma cutting systems

Process-setup purges are different for an OptiMix or VWI gas connect console than they are for a CorePlus or Core gas connect console.

If your cutting system has an OptiMix or VWI gas connect console, a process-setup purge automatically follows the gas-change purge and includes preflow and cutflow purges.

If you have a CorePlus or Core gas connect console, only the process-setup purge occurs. There is no gas-change purge.

The type of process gas that is selected for a process-setup purge aligns with the operator-selected process.

Process selection

All of the cutting processes have a process ID that is a unique identification number. Each process ID aligns with a set of preprogrammed values in the cut chart database in the plasma power supply control PCB.

Processes in the database can be selected by these categories:

- Metal type and thickness
- Cutting current
- Plasma and shield gas types
- Process category

Process selection can occur only during these states of operation:

- Initial Checks state (2)
- Inert Gas Purge state (4)
- Wait for Start state (5)
- Manual Leak Test state (20)
- End of Cycle state (14)

When you select a process ID from the CNC or from the **Operate** screen in the XPR web interface, the cutting system automatically starts the preprogrammed settings for that process using the values in the database.

Controls on the screen let you select, monitor, and control processes directly from the CNC or from the **Operate** screen in the XPR web interface.

Manual selection of settings is not necessary in most conditions. However, you can adjust some preprogrammed settings with override or offset commands, within limits. Refer to Process ID offsets / overrides on page 238.

Use process IDs for optimal settings

To automatically get recommended settings, select the process ID for the process that aligns with your cutting application.

When you select a process ID from the CNC or from the XPR web interface, you automatically get the optimized settings that Hypertherm recommends for that process.

The preprogrammed settings come from extensive Hypertherm laboratory tests. Because of differences in cutting systems, metals, and consumables, it can be necessary to adjust the settings. However, in most conditions, it is possible to get the best results when you use the default settings that come with a process ID.

1. Go to the process selection screen on the CNC or to the **Operate** screen on the XPR web interface.
2. Select the process ID:
    a. Examine the list of available processes.
    b. Identify the process that best aligns with your cutting application.

       For example, select process ID 1153 to start the settings for 170 A, 12 mm (0.5 inch), mild steel, O_2/Air.
3. If none of the processes are satisfactory:
    a. Select an available process that is almost the same.
    b. Send the necessary offset command or commands to adjust the setting or settings as necessary.

What to do next: In some conditions, an unusual cutting process can be necessary. Speak to your cutting machine supplier or regional Hypertherm Technical Service team.

Process ID offsets / overrides

You can adjust some preprogrammed settings with an offset or override command.

An offset/override command is a type of serial RS-422, EtherCAT, wireless (XPR web interface through Wi-Fi), or Ethernet LAN signal that lets you change the default value of a setting within a permitted limit.

Offset settings stay on until you send a new process ID to the cutting system or until power is removed from the cutting system. When manual-set mode is enabled, the process configuration keeps the offset settings and sets them when manual-set mode is used.

For descriptions of offset commands and the permitted limits for each adjustable setting, refer to the *CNC Communication Protocol for the XPR Cutting System (10085793).*

Cut charts

A cut chart contains parameters that are necessary to get optimal results for your cutting process with special materials and thicknesses.

Electronic cut charts are available on the cut chart screen of the CNC or the XPR web interface. For information about how to find electronic cut charts, refer to the instruction manual that came with your CNC. Always use these electronic cut charts for full and accurate process-selection information.

Cut charts are also available in the *XPR Cut Charts Instruction Manual (809830)*.

If the default process ID settings are not satisfactory for your application, use the cut charts to help with process selection.

The results that you want from a process can help you to select the correct process. In some conditions, cut quality is important. In other conditions, speed is important. Frequently, the best choice balances speed and quality. The preprogrammed settings that come with a process ID balance quality and speed with using moderately used consumables.

Process core thickness (PCT)

The cut chart for each cutting process contains a range of possible thicknesses.

Process engineers have supplied cut parameters for an optimal range of thicknesses (process category 1 for XPR). This optimal range is known as the Process Core Thickness (PCT). Thicknesses that are more than and less than the PCT can have different results for cut quality, cut speed, and piercing.

Process categories

The cut charts have five process categories. Each category has a unique process category number (1 – 5) that identifies the performance that is possible when you select that process.

The category number for the process that you select changes how the cut quality and the cut speed are balanced. For best results, Hypertherm recommends that you select process category number 1 when possible. Category 1 supplies an optimal thickness (or PCT) for that cut process that balances cut quality and cut speed.

These tables identify the possible results with different process category numbers.

Table 32 - Process options and possible results for mild steel

Process category number	Process category condition	Category description	Quality	Speed
Category 1	PCT	▪ The process best balances cut speed and cut quality. ▪ The process is optimal for this thickness. ▪ The cuts frequently have no dross.	Very good	Very good
Category 2	Thicker than PCT	▪ The process is a good selection when edge quality is more important than speed. ▪ Some low-speed dross is possible.	Very good to excellent	Lower
Category 3	Thinner than PCT	▪ The process is a good selection when speed is more important than edge quality. ▪ The cuts frequently have no dross.	Lower	Higher
Category 4	Edge start for most processes	▪ An edge start is necessary, but not for argon-assist processes. ▪ Thick, low-speed dross is possible.	Good	Low
Category 5	Severance	▪ This is the maximum thickness for these processes. ▪ An edge start is necessary. ▪ Cut speeds can be very slow. ▪ Cut-edge quality can be rough. ▪ It is possible to get a lot of dross. ▪ Thick-metal cutting techniques can be necessary. ▪ There is a risk that the voltages that are necessary for severance cutting can prevent the system from operating at 100% duty cycle with extended cutting intervals.	Very low	Very low

In general, Hypertherm recommends lower amperage processes for the best cut-edge quality and higher amperage processes for the best dross-free cutting. When speed is more important than quality, use a higher amperage process. For information about process selection, refer to the *XPR Cut Charts Instruction Manual (809830)*.

Table 33 - Process options and possible results for non-ferrous materials

Process category number	Process category condition	Category description	Quality	Speed
Category 1	PCT	▪ When possible, select Category 1 for optimal edge quality and speed, with minimum dross. ▪ The process is optimal for this thickness. ▪ The cuts frequently have no dross.	Very good to excellent	Very good
Category 2	Thicker than PCT	▪ In most conditions, it is possible to get square cut edges with sharp top edges. ▪ A darker edge color is possible with stainless steel. ▪ Some dross is possible.	Good to very good	Lower
Category 3	Thinner than PCT	▪ Select Category 3 when speed is more important than edge quality. ▪ Some dross is possible.	Lower	Higher
Category 4	Edge start only	▪ An edge start is necessary. ▪ A darker edge color is possible with stainless steel. ▪ Thick dross is possible.	Good	Low
Category 5	Severance	▪ This is the maximum thickness for these processes. ▪ An edge start is necessary. ▪ Cut speeds can be very slow. ▪ Cut-edge quality can be rough. ▪ It is possible to get a lot of dross. ▪ Thick-metal cutting techniques can be necessary. ▪ There is a risk that the voltages that are necessary for severance cutting can prevent the system from operating at 100% duty cycle with extended cutting intervals.	Very low	Very low

In general, Hypertherm recommends dross-free processes. Non-ferrous dross is not easy to remove. The plasma cutting system supplies these non-ferrous cutting processes, but the processes that are available are different for different gas connect consoles: Air/Air, N_2/N_2, N_2/H_2O, F5/

N_2 and mixed-fuel gas/N_2. For information about process selection, refer to the *XPR Cut Charts Instruction Manual (809830)*.

Torch consumables

The plasma cutting system uses the same consumable parts for perpendicular-position processes (90° angle) and bevel-cutting processes.

It is not necessary to change consumables when you go from a perpendicular-position process to bevel cutting or from bevel cutting to a perpendicular-position process. It also is not necessary to keep two different sets of consumables (perpendicular and bevel).

For information about how to select consumables (including part numbers) by process type and metal and how to install the consumables, refer to these sources:

- *XPR Cut Charts Instruction Manual (809830)*
- Install the consumables on page 145

Example configurations for consumables

Consumables that are worn or have damage can have a bad effect on cut quality.

At a minimum, examine the installed consumables one time each day **before** system operation. For information about how to do this, refer to Examine the consumable parts on page 266.

Ferrous (mild steel) example configurations

Use these sets of consumables to cut ferrous material. Mild steel is an example of a ferrous metal.

Mild steel – 30 A – O_2/O_2

Figure 59 - Mild steel 30 A consumables

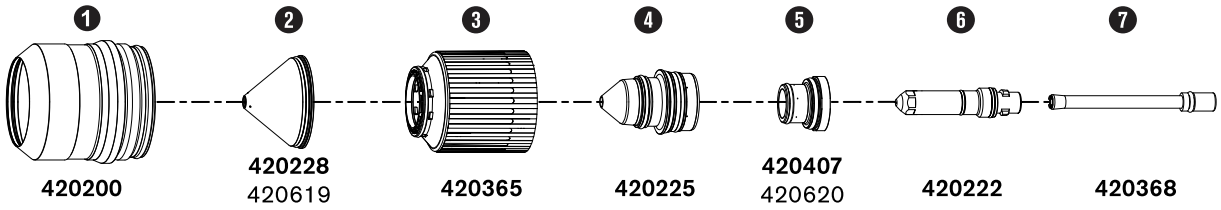

1 Shield retaining cap

2 Shield [1]

Figure 59 - Mild steel 30 A consumables (continued)

3 Nozzle retaining cap

4 Nozzle

5 Swirl ring [1]

6 Electrode

7 Water tube

1 The bottom part number is for mirror cutting only.

Mild steel – 50 A – O_2/Air

Figure 60 - Mild steel 50 A consumables

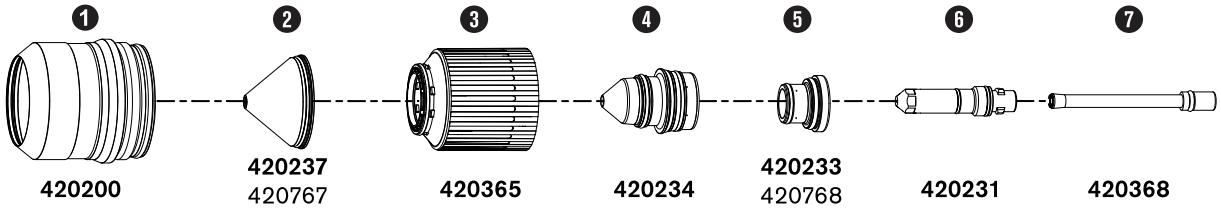

1 Shield retaining cap

2 Shield [1]

3 Nozzle retaining cap

4 Nozzle

5 Swirl ring [1]

6 Electrode

7 Water tube

1 The bottom part number is for mirror cutting only.

Mild steel – 80 A, 130 A, 170 A – O_2/Air

Figure 61 - Mild steel 80 A – 170 A consumables

Figure 61 - Mild steel 80 A – 170 A consumables (continued)

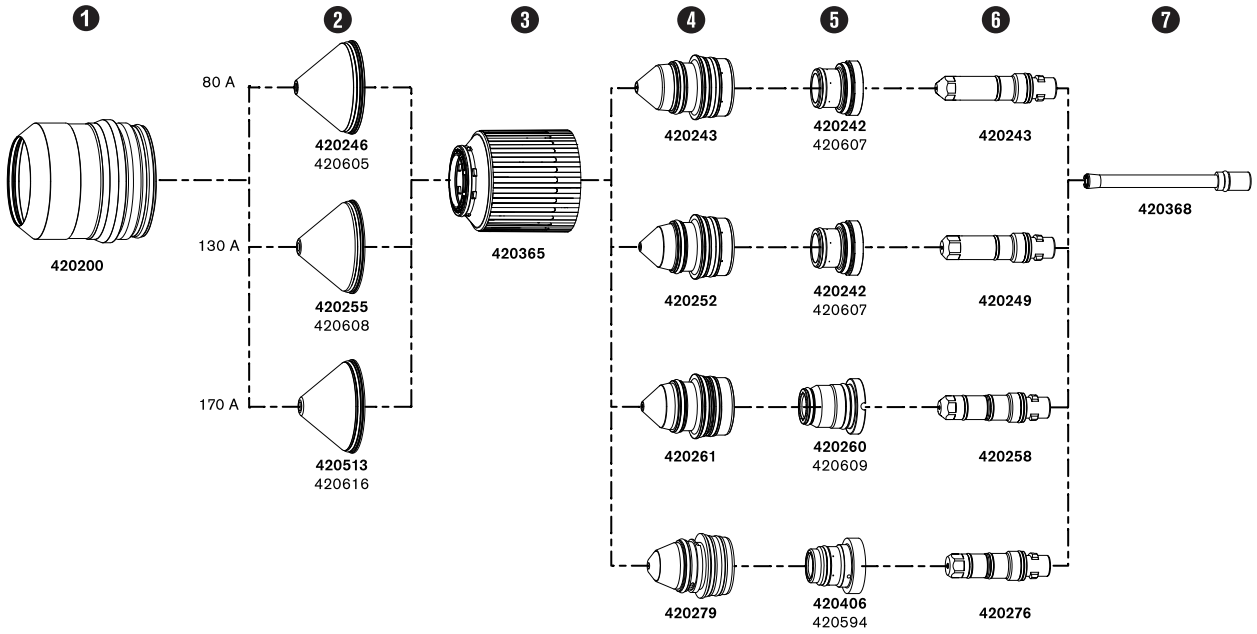

1 Shield retaining cap

2 Shield [1]

3 Nozzle retaining cap

4 Nozzle

5 Swirl ring [1]

6 Electrode

7 Water tube

1 The bottom part number is for mirror cutting only.

Non-ferrous (stainless steel and aluminum) example configurations

Use these sets of consumables to cut non-ferrous material. Stainless steel and aluminum are examples of non-ferrous metals.

Non-ferrous – 40 A – N_2/N_2 and Air/Air

Figure 62 - Non-ferrous 40 A consumables

Figure 62 - Non-ferrous 40 A consumables (continued)

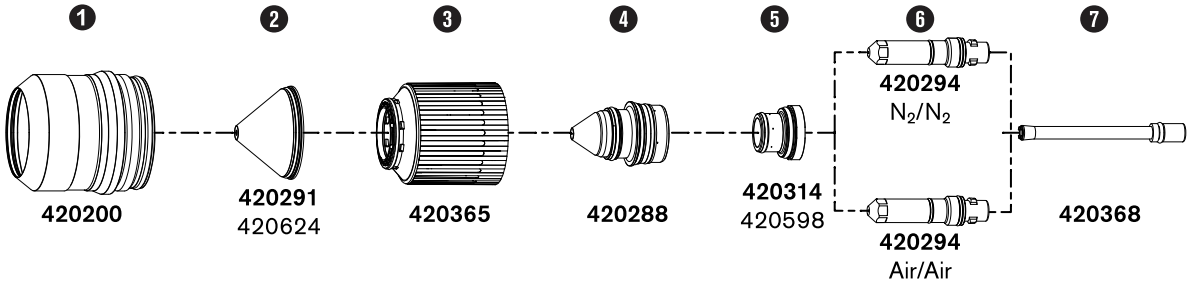

1 Shield retaining cap

2 Shield [1]

3 Nozzle retaining cap

4 Nozzle

5 Swirl ring [1]

6 Electrode

7 Water tube

1 The bottom part number is for mirror cutting only.

Non-ferrous – 60 A – F5/N_2, N_2/N_2, N_2/H_2O, and Air/Air

F5/N_2 and N_2/H_2O can be used only with VWI and OptiMix gas connect consoles.

Figure 63 - Non-ferrous 60 A consumables

Figure 63 - Non-ferrous 60 A consumables (continued)

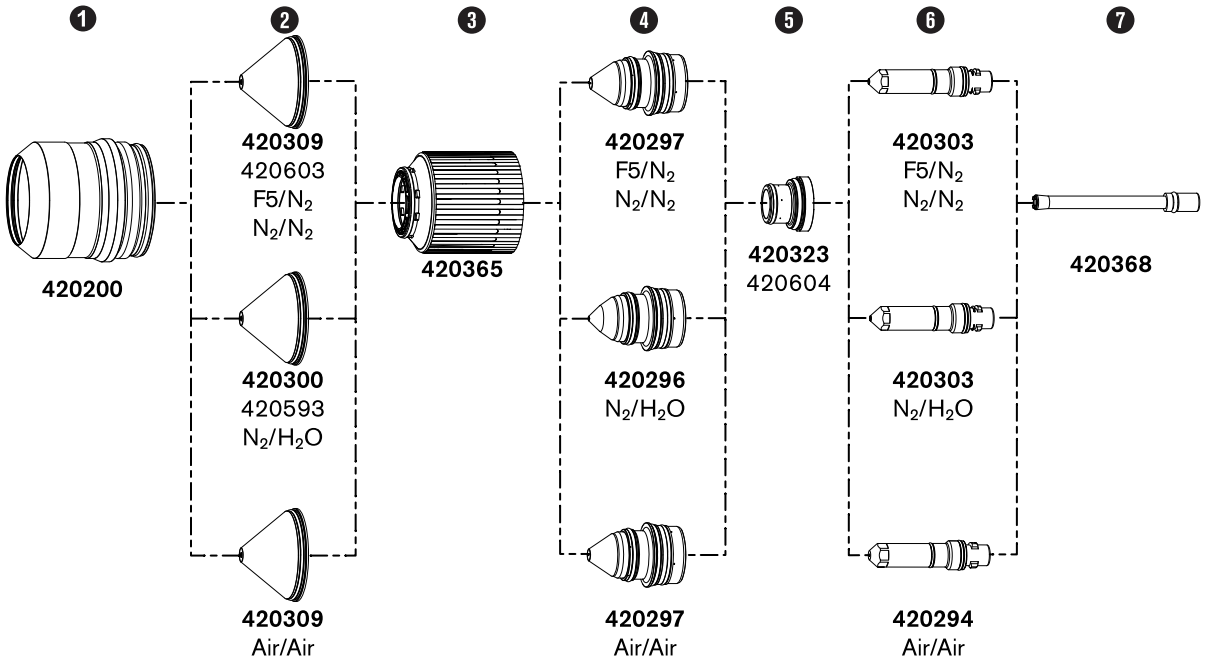

1 Shield retaining cap

2 Shield [1]

3 Nozzle retaining cap

4 Nozzle

5 Swirl ring [1]

6 Electrode

7 Water tube

1 The bottom part number is for mirror cutting only.

Non-ferrous – 80 A – F5/N_2, N_2/N_2, N_2/H_2O, Air/Air

F5/N_2 and N_2/H_2O can be used only with VWI and OptiMix gas connect consoles.

Figure 64 - Non-ferrous 80 A consumables

Figure 64 - Non-ferrous 80 A consumables (continued)

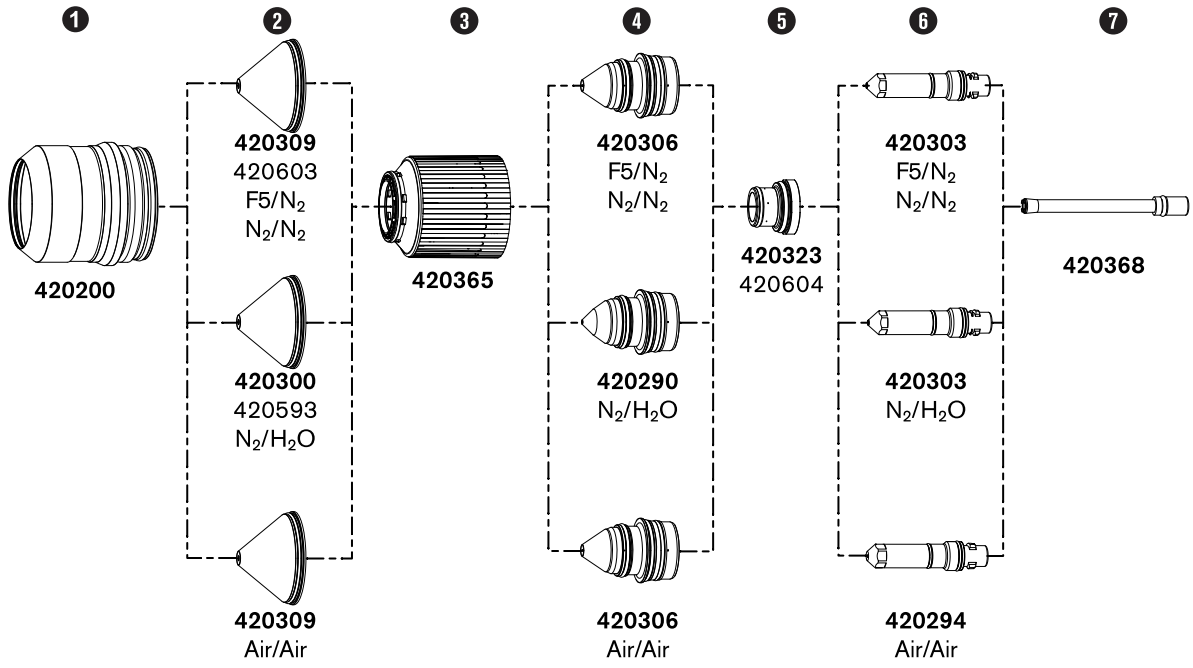

1 Shield retaining cap

2 Shield [1]

3 Nozzle retaining cap

4 Nozzle

5 Swirl ring [1]

6 Electrode

7 Water tube

1 The bottom part number is for mirror cutting only.

Non-ferrous – 130 A – N_2/N_2, Mix/N_2, N_2/H_2O

F5/N_2 and N_2/H_2O can be used only with VWI and OptiMix gas connect consoles. Mix/N_2 can be used only with OptiMix gas connect consoles.

Figure 65 - Non-ferrous 130 A consumables

Figure 65 - Non-ferrous 130 A consumables (continued)

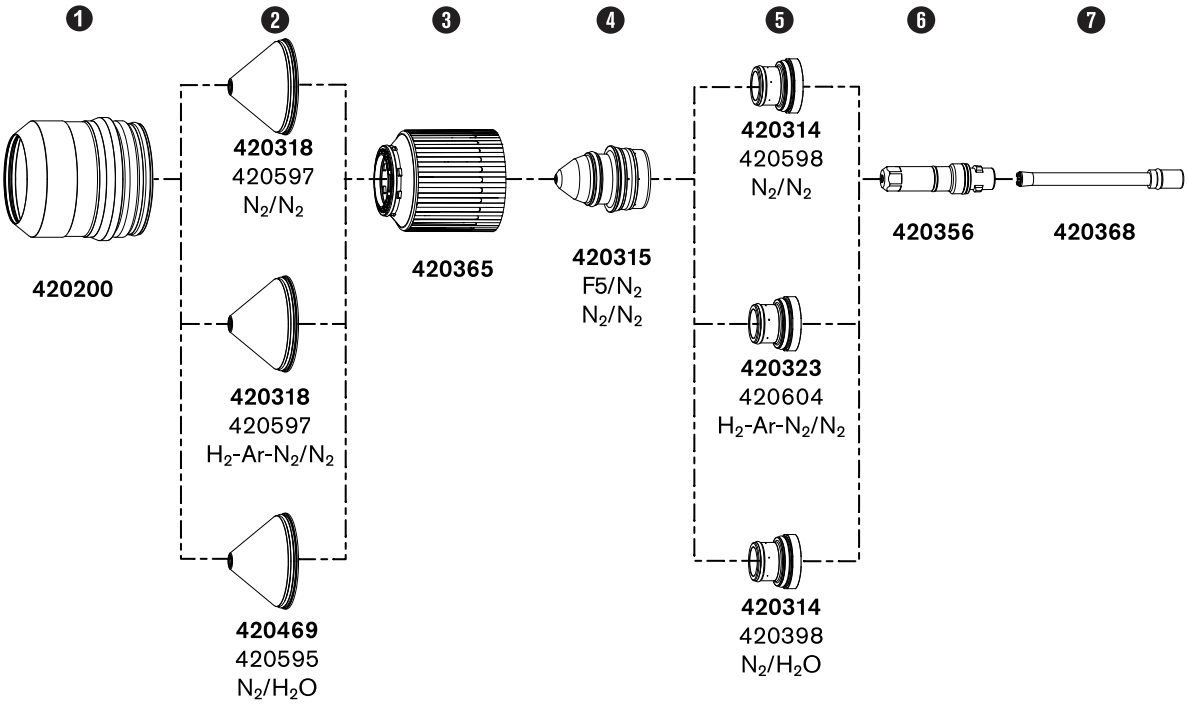

1 Shield retaining cap

2 Shield [1]

3 Nozzle retaining cap

4 Nozzle

5 Swirl ring [1]

6 Electrode

7 Water tube

1 The bottom part number is for mirror cutting only.

Non-ferrous – 170 A – N_2/N_2, Mix/N_2, N_2/H_2O, Air/Air

N_2/H_2O can be used only with VWI and OptiMix gas connect consoles. Mix/N_2 can be used only with OptiMix gas connect consoles.

Figure 66 - Non-ferrous 170 A consumables

Figure 66 - Non-ferrous 170 A consumables (continued)

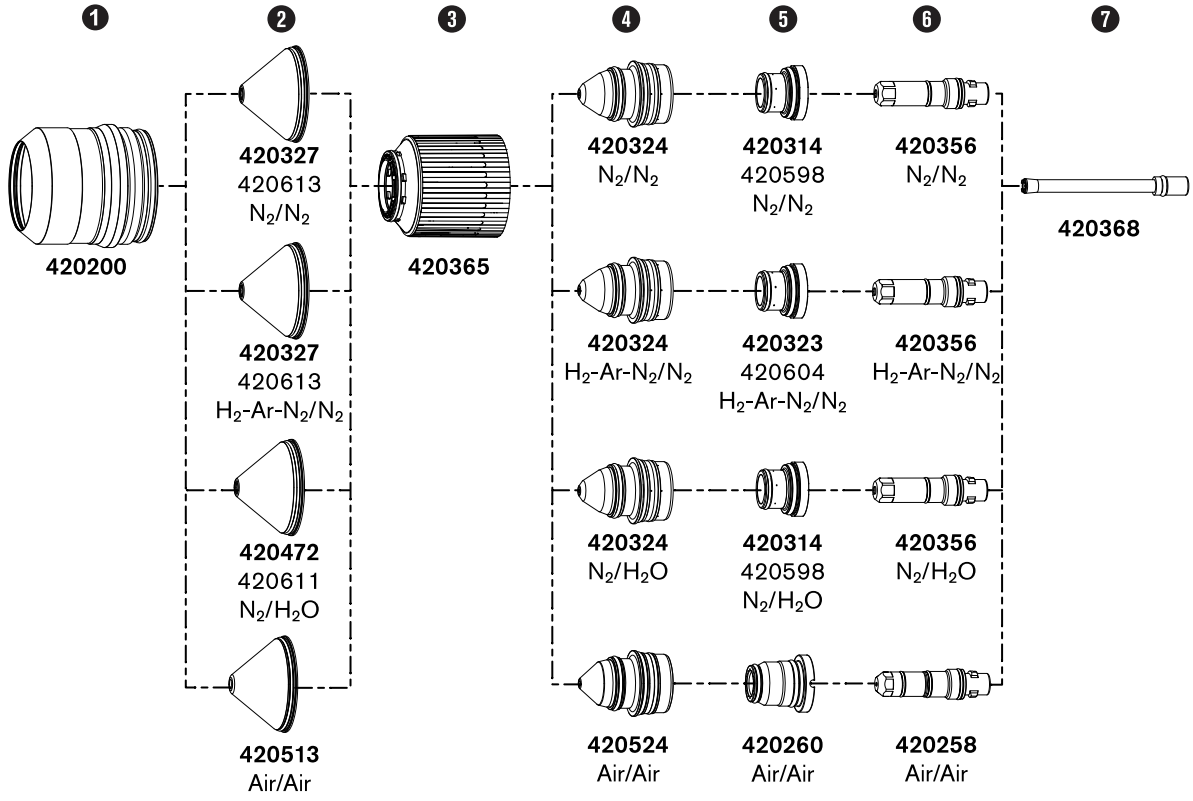

1 Shield retaining cap

2 Shield [1]

3 Nozzle retaining cap

4 Nozzle

5 Swirl ring [1]

6 Electrode

7 Water tube

1 The bottom part number is for mirror cutting only.

Recommendations for maximum consumable life

Consumables are the parts of the torch that wear as they are used. Consumables that are near end-of-life can have a bad effect on cut quality and performance.

- LongLife® process settings can keep erosion on the emitter surface of the electrodes to a minimum. These steps occur automatically with LongLife electrode protection:
  - An automatic ramp up of the gas and current flow at the start of a cut

- An automatic ramp down of the gas and current flow at the end of a cut

- To get the full benefits of the Hypertherm LongLife and Arc Response Technology™, do not fire the torch into the air.

  It is permitted to start a cut at the edge of the workpiece. However, when possible, start and stop cuts on the surface of the workpiece.

- Use the pierce settings in the cut chart database.
- When possible, do not cut metal that is magnetic or that can easily become magnetic. For example, do not cut armor plate that has a high nickel content.
- To get the full benefits of the Hypertherm automatic ramp-down error protection, select processes that have cut speeds of 3,560 mm/min (140 in/min) or less. Refer to Automatic ramp-down error protection on page 251.
- To keep the risk of catastrophic failure of a consumable part to a minimum when cut speeds are more than 3,560 mm/min (140 in/min), always do these steps when cutting:
  - Decrease the cut speed when the end of the cut is near.
  - Program torch movement into the scrap area of the workpiece.

  When possible, use a chain cut so that the path of torch movement goes directly from one cut part to the next. This type of cut decreases the quantity of plasma arc starts and stops for multipart cutting, which can cause damage to electrodes.

Arc Response Technology

Arc Response Technology lets the plasma cutting system adapt to problems at the torch that can cause decreased consumable life or possible torch damage.

One or more choppers in the plasma power supply monitor the current and arc voltage load in intervals of 33 microseconds (30 kHz). This scan helps the system to almost immediately find and adapt to possible problems at the torch during cutting.

Automatic torch protection

When consumables have a catastrophic failure (or blow out) at high-current settings, torch damage is possible. This torch damage can occur from the plasma arc or from molten copper or brass that gets into the coolant paths of the torch.

Automatic torch protection happens at 220 A, 300 A, and 460 A. At lower currents the torch is protected by the automatic ramp-down error protection algorithm. Refer toAutomatic ramp-down error protection on page 251.

If catastrophic consumable failure occurs, the chopper or choppers in the plasma power supply can find the problem at its start through the EMI or noise signature of the current that is being supplied to the torch. The chopper adapts quickly to stop the cutting system and to prevent damage to the torch. The electrode will have a catastrophic failure and there can be damage to other consumables parts, but catastrophic damage to the torch will not occur.

Automatic ramp-down error protection

For LongLife technology, a controlled stop of the current and gas pressure is necessary for protection of electrode life for mild steel cut processes. A failure to complete the cut on the workpiece causes most uncontrolled stops (ramp-down errors).

Failure to complete the cut on the workpiece causes the plasma arc to extend too far and then to snap out (break) in a ramp-down error, which can quickly decrease consumable life. These are common causes for a ramp-down error:

- Incorrect hole lead outs
- Cutting off the edge of the workpiece

The cutting system can sense a ramp-down error before the arc snaps out (breaks) and can adjust quickly to do a controlled stop of the current and gas pressure. This type of controlled stop can help very much to increase electrode life, especially when cut speeds are less than 3,560 mm/min (140 in/min).

7 Maintenance

Overview of cutting system maintenance

Hypertherm cutting systems can operate in harsh conditions for many years. For satisfactory cutting system performance, decreased operation costs, and longer cutting system life, it is important to do all maintenance procedures on schedule.

The Preventive Maintenance Program (PMP) explains how to do preventive maintenance tasks. The PMP has two parts: a cleaning and inspection schedule and a component-replacement schedule.

If you have questions about the maintenance of your cutting system, speak to your cutting machine supplier or regional Hypertherm Technical Service team. You can find contact information for each regional office at www.hypertherm.com on the "Contact us" page.

References for cutting system maintenance

- For instructions about preventive maintenance (such as weekly, monthly, and yearly tasks) refer to the *XPR Preventative Maintenance Program (PMP) Instruction Manual (809490)*.
- For recommendations about how to diagnose and troubleshoot performance issues, refer to *Diagnostics and Troubleshooting*.
- For PCB drawings and LED locations, refer to Plasma power supply power distribution PCB (141425) diagram on page 391.

Remove the power from the cutting system

It is necessary to remove the power from the cutting system for many procedures.

⚠ WARNING

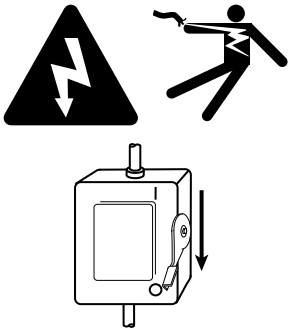

ELECTRIC SHOCK CAN KILL

If the line-disconnect switch is not in the OFF position you can get a serious electric shock. Electric shock can seriously injure or kill you.

The line-disconnect switch must be in the OFF position before you connect the power cord to the cutting system. It must REMAIN in the OFF position until all installation steps are complete. In the United States, use a "lock out/tag out" procedure until installation is complete. In other countries, follow the appropriate national and local safety procedures. Refer to the *Safety and Compliance Manual (80669C)* for more safety information.

⚠ WARNING



ELECTRIC SHOCK CAN KILL

The plasma power supply contains dangerous electric voltages that can seriously injure or kill you. Even if the plasma power supply is turned OFF, you can still get a serious electric shock if the plasma power supply remains connected to an electric power source.

Use extreme caution if you do diagnosis or maintenance tasks when the plasma power supply remains connected to an electric power source and the outer cover or panels are removed. All work that requires removal of the plasma power supply outer cover or panels must be done by a qualified technician. Refer to the *Safety and Compliance Manual (80669C)* for more safety information.

⚠ WARNING



MACHINE MOTION CAN CAUSE INJURY

The end-use customer and the cutting machine supplier are responsible for providing protection against the hazardous moving parts of this cutting system. Read and follow the instruction manual provided by the cutting machine supplier. Refer to the *Safety and Compliance Manual (80669C)* for more safety information.

Before you begin: Before you remove the power from the cutting system, it can be helpful to move the torch to the edge of the cutting table and raise the torch lifter to its highest point. This gives you easier access to the torch and consumable parts.

1. Set the line-disconnect switch to the OFF position.
2. If the cutting system is not hard wired, disconnect the main power from the electric power.

   If the cutting system is hard wired, you cannot disconnect the main power from the electric power.

   Even if you remove the power from the cutting system, you can still get a serious electric shock if the plasma power supply stays connected to an electric power source. Use extreme care during service and maintenance when the cutting system is connected to electricity.
3. Make sure that the power-indicator LED is not illuminated on the plasma power supply and cooler if applicable, gas connect console, and torch connect console.

Cleaning and inspection schedule for preventive maintenance

The cleaning and inspection schedule for plasma cutting systems shows the intervals of preventive maintenance tasks.

Usually, operators can do the cleaning and inspection tasks for the one-day and one-week intervals. Qualified personnel must do the cleaning and inspection tasks for the one-month, six-month, and one-year intervals.

Table 34 - Example checklist of inspection, preventive maintenance, and cleaning tasks

Maintenance task	Day	Week	Month	6 Months
Do a test of the inlet pressures	X			
Examine the gas regulators	X			
Examine the shield water regulator (if applicable)	X			
Examine the air filter	X			
Examine the connections between system components	X			
Examine the coolant level and condition	X			
Examine the water tube and torch	X			
Examine the consumable parts	X			
Examine the torch receptacle	X			
Examine the torch lead	X			
Do a gas leak test		X		
Do the weekly coolant check (coolant flow measurements)		X		
Clean the internal surfaces of the system components			X	
Examine the contactors			X	
Examine the relays			X	
Examine the gas line connections for leaks			X	
Examine the ground connections			X	
Examine the table-to-workpiece connection			X	
Do coolant system maintenance				X

Tasks for one-day intervals

Do a test of the inlet pressures

While the gas flows, do a test of gas pressures in preflow, cutflow, and pierceflow modes to find if the incoming gas pressure is in a range that complies with the inlet-pressure requirements for your cutting system.

Before you begin: Make sure that the cutting system is prepared for operation while the gas flows.

1. Use the CNC or **Gas System** screen on the XPR web interface to see the most current measurements of gas pressure.

For information about how to see gas pressures on your CNC, refer to the instruction manual that came with your CNC. For information about how to see gas pressures on the XPR web interface, refer to the instruction manual that came with your cutting system.

2. If a gas pressure is too high or too low, use the regulators to adjust the pressure to the correct range.

Table 35 - Gas quality, pressure, and flow requirements

Gas	Quality	System inlet pressure (during gas flow [1])	Flow rate
O_2 (oxygen)	99.5% pure, clean, dry, oil-free	Core, CorePlus, VWI: 7.5 bar ± 0.4 (110 psi ± 5) OptiMix: 7.9 bar ± 0.4 (115 psi ± 5)	71 slpm (150 scfh)
N_2 (nitrogen)	99.99% pure, clean, dry, oil-free	Core, CorePlus, VWI: 7.5 bar ± 0.4 (110 psi ± 5) OptiMix: 8.3 bar ± 0.4 (120 psi ± 5)	181 slpm (380 scfh)
Air [2]	Clean, dry, oil free consistent with 8573-1:2010 Class 1.4.2	Core, CorePlus, VWI: 7.5 bar ± 0.4 (110 psi ± 5) OptiMix: 7.9 bar ± 0.4 (115 psi ± 5)	118 slpm (250 scfh)
H_2 (hydrogen)	99.995% pure	OptiMix: 8.3 bar ± 0.4 (120 psi ± 5)	50 slpm (105 scfh)
Ar (argon)	99.99% pure; clean, dry, oil-free	CorePlus, VWI: 7.5 bar ± 0.4 (110 psi ± 5) OptiMix: 8.3 bar ± 0.4 (120 psi ± 5)	118 slpm (250 scfh) [3]
F5 (95% nitrogen, 5% hydrogen)	99.98% pure	VWI: 7.5 bar ± 0.4 (110 psi ± 5) OptiMix: 7.9 bar ± 0.4 (115 psi ± 5)	40 slpm (85 scfh)

1 When there is **no** gas flow, make sure that the pressure at the gas inlet connection is less than 8.6 bar (125 psi) to prevent system alerts.

2 Air compressors must remove oil before they supply air to the cutting system.

3 Flow rate during argon marking and argon assist.

Examine the gas regulators

Before cutting system operation, examine the regulators on the supply gases to make sure that the pressures and flow rates are correct. Adjust the regulators on the supply gases, if necessary.

1. Make sure the gas pressures and flow rates are within the recommended range.

   Refer to Table 35 on page 257.

2. Adjust the regulators on the supply gases, if necessary.

Examine the shield-water regulator (if applicable)

Before cutting system operation, examine the regulator on the shield water supply to make sure that the pressure and flow rate are correct. Adjust the regulator on the water supply, if necessary.

1. Make sure that the water pressure and flow rate is within the recommended range.

Table 36 - Quality, pressure, and flow requirements for shield water

Quality [1]	Minimum and maximum pressure	Flow rate required
Deionized water is **not** recommended to use as shield water. Deionized water will react with the copper components in the system and result in decreased life of components and consumables. Hypertherm recommends that you contact a water-quality expert for guidance.	2.76 bar (40 psi) minimum 8.27 bar (120 psi) maximum	35 L/h (9.4 U.S. gal/h)

1 Water that does not meet minimum purity specifications can cause unwanted deposits on the torch nozzle and shield. These deposits can alter the water flow and produce an unstable arc.

2. Adjust the regulator on the water supply, if necessary.

   The regulator on the gas connect console cannot be adjusted.

   For more information about shield-water requirements, refer to the instruction manual that came with your cutting system.

Examine the air filter

- Examine the air filter in the gas connect console for contamination.

If you find any moisture	Replace the filter.
If you find a small or moderate quantity of dust or small particles [1]	Use compressed air or suction to clean the air filter.
If you find a large quantity of dust or large particles [1]	Replace the air filter.

1 Refer to Figure 67 on page 259 for an example.

Figure 67 - Contaminated air filter

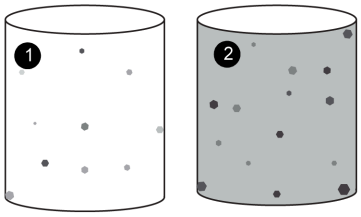

1 A moderate quantity of solid contamination

2 A large quantity of solid contamination

Examine the connections between the system components

1. Examine all hoses, cables, and leads for these conditions:
    a. Scrapes, cuts, or holes
    b. Chemical spills or burns
    c. Kinks or bends
2. Replace the hose, cable, or lead if you find signs of damage or kinks and bends.

    Refer to the *Parts List* in the instruction manual that came with your cutting system.

3. Examine all of the fittings that connect the hoses, cables, and leads:

If you find loose connections	Tighten loose connections, but do not tighten the connections too much.
If you find signs of damage or excess wear	Get a replacement hose, cable, or lead from Hypertherm.

Individual fittings for external hoses, cables, and leads are **not** replaceable. If you find a problem with an integrated fitting, you must replace the entire hose, cable, or lead that comes with the integrated fitting.

4. Make sure that the hoses, cables, and leads do not twist or kink during system operation and torch movement. Put the hoses, cables, and leads in different positions if necessary.

Examine the coolant condition and level

Examine the coolant condition and level in the plasma cutting system. Replace contaminated coolant. Add coolant if the level is low.

1. Remove the cap from the reservoir inlet on top of the plasma power supply.
2. Examine the reservoir internally for coolant contamination.

If you find any contamination	Replace all of the coolant. Refer to Remove old coolant from the plasma cutting system on page 278.
If you do not find contamination	Continue to the next step.

3. If the coolant is below the base of the inlet, add coolant to the reservoir until the coolant is at the base of the inlet.

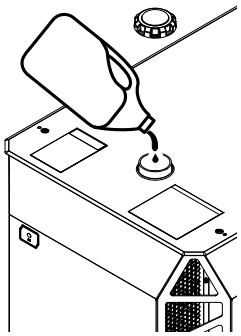

⚠ CAUTION



WET FLOOR

If you put too much coolant in the reservoir, the coolant can spill onto the floor. Coolant can cause floors to become slippery.

Be careful not to put too much coolant in the reservoir.

4. Install the cap on the reservoir inlet.

Maintenance for torch and consumable parts

Remove the torch and consumable parts

It can be necessary to remove the torch and consumable parts for replacement, maintenance, or troubleshooting.

⚠ WARNING

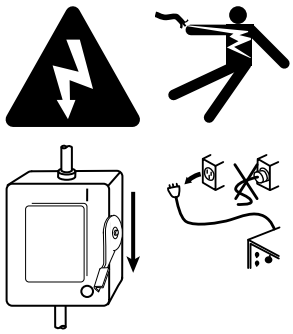

ELECTRIC SHOCK CAN KILL

Disconnect electric power before doing installation or maintenance. The line-disconnect switch must STAY in the OFF position until all of the installation or maintenance steps are complete. Refer to the *Safety and Compliance Manual (80669C)* for more safety information.

⚠ WARNING



HOT PARTS CAN CAUSE SEVERE BURNS

Let the temperature of the plasma power supply decrease before you do any maintenance.

NOTICE

A LOOSE OR OVERTIGHTENED ELECTRODE CAN CAUSE DAMAGE TO THE TORCH

If you do not correctly install and tighten the electrode, torch damage can occur.

A tool is necessary to correctly install and tighten the torch electrode. Do not use your hands. Hypertherm recommends tightening the electrode to a torque value of 2.3 N·m – 2.8 N·m (20 lbf·in – 25 lbf·in).

1. Remove the power from the cutting system:
    a. Set the line-disconnect switch to the OFF position.
    b. Make sure that the power-indicator LED is **not** illuminated on the plasma power supply or other system components.
2. Loosen the torch coupler nut to release the torch from the torch receptacle.

    The torch and consumable parts can be hot. Put on gloves to prevent burns.
3. Put the torch and torch receptacle on a surface that is:
    - ☐ Clean
    - ☐ Dry
    - ☐ Oil-free
4. Remove the consumable parts as shown:
    a. Use your hands to pull and twist off the swirl ring.
    b. Use the consumable-parts tool to turn the electrode counterclockwise.
    c. Hold the tool tightly and pull straight out to correctly remove the electrode.

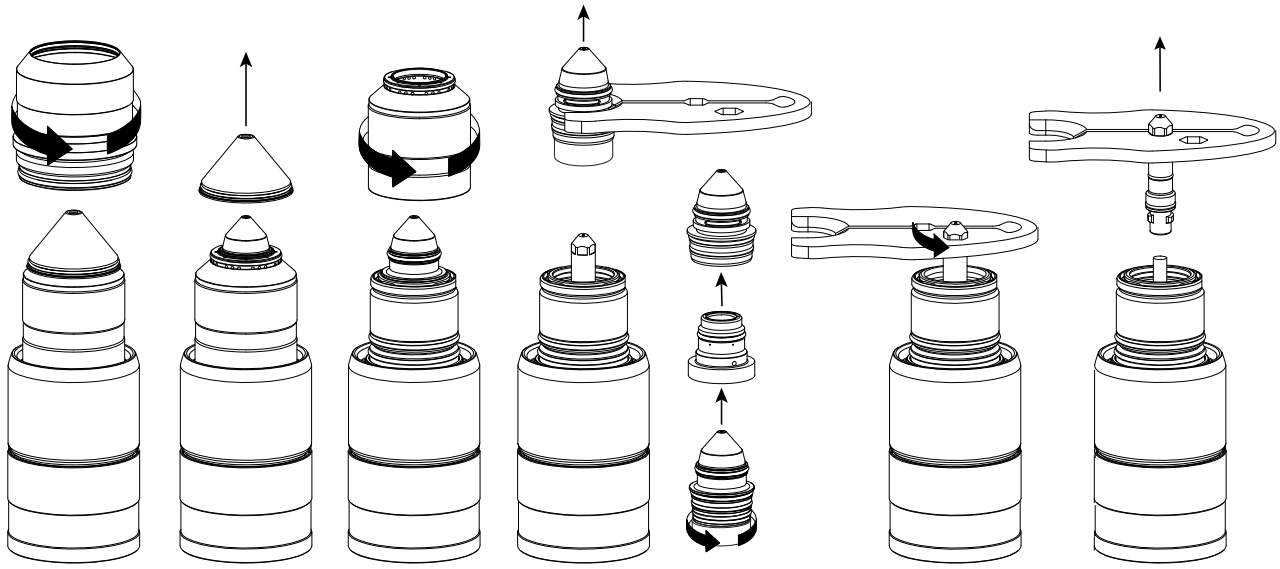

5. Put the consumable parts on a surface that is:
    - ☐ Clean
    - ☐ Dry
    - ☐ Oil-free

Examine the water tube and torch

Before you begin:

- Remove the power from the cutting system on page 253.
- Remove the torch and consumable parts on page 139.

1. Remove the water tube from the torch main body.

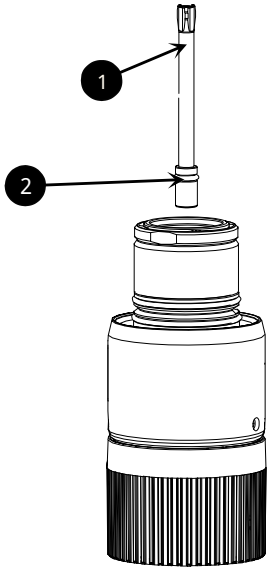

1 Water tube

2 O-ring

2. Examine the water tube for bends and pitting.

If you find bends or pitting	Replace the water tube, and then go to step 4 on page 264.
If you do not find bends or pitting	Continue to the next step.

3. Examine the O-ring on the water tube.

If you find signs of damage	Replace the O-ring. Torch rebuild kits are available from Hypertherm.
If you do not find signs of damage and the O-ring is dry	Apply a thin layer of silicone lubricant (027055). The O-ring must be shiny. Too much lubricant can prevent water-tube movement. Remove unwanted lubricant if found.

4. Examine the torch main body and torch insulator for cracks.

If you find cracks	Replace the torch main body.
If you do not find cracks	Continue to the next step.

5. Examine the nozzle and electrode-mating surfaces on the torch main body for damage or pitting.

If you find signs of damage or pitting	Replace the torch main body.
If you do not find signs of damage or pitting	Continue to the next step.

6. Clean the torch main body if you did not replace it during step 4 on page 264 or if you think it is dirty:

   a. Use a clean paper towel or lint-free cloth to clean the internal and external surfaces of the torch main body.

   b. Use a cotton swab to clean internal surfaces that are not easy to touch.

   c. Make sure that you do not let fibers stay on the internal surfaces of the torch main body.

   d. Use compressed air to remove remaining particles from the torch main body.

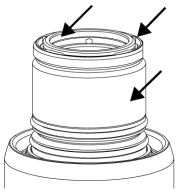

7. Examine the O-rings on the torch main body.

If you find signs of damage	Replace the O-ring. Torch rebuild kits are available from Hypertherm.
If you do not find signs of damage and the O-ring is dry	Apply a thin layer of silicone lubricant (027055). The O-ring must be shiny. Too much lubricant can prevent gas flow. Remove unwanted lubricant if found.
If the O-ring has too much lubricant	Use a clean, lint-free cloth to remove unwanted lubricant.

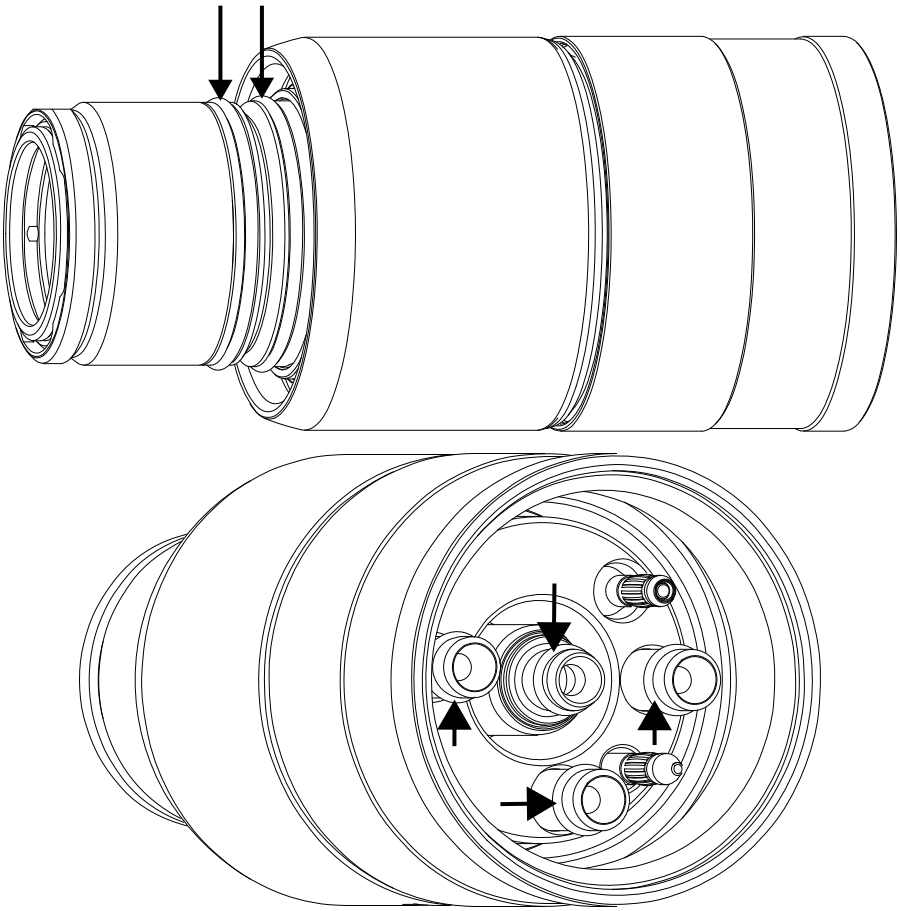

8. Install a water tube in the torch.

   When correctly installed, the water tube can feel loose. Any side-to-side looseness will go away after electrode installation.

What to do next: Examine the consumable parts on page 266.

Examine the consumable parts

Examine and clean consumable parts of the XPR plasma cutting system, look for signs of damage and correct lubrication of O-rings. Replace any consumable parts that have signs of damage and make sure that all components are clean before assembly.

Before you begin:

- Remove the power from the cutting system on page 253
- Remove the torch and consumable parts on page 139

1. Examine the consumable parts for signs of damage.

Table 37 - Inspection tasks for consumable parts

Inspect	Look for	Action if found
Shield cap 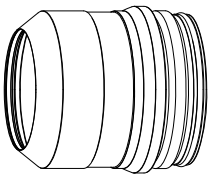	Erosion Cracks Melted or missing surfaces Damaged O-rings	Replace the shield cap.
	Molten metal attached	If there is no damage to the shield cap, you can remove the molten metal. If there is damage, replace the shield cap.
	Dry O-rings	Apply a thin layer of silicone lubricant (027055) to O-rings that are dry.
Shield 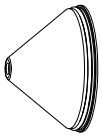	A center hole that is not circular Damage O-rings	Replace the shield.
	Over-lubricated O-rings	Use a clean, lint-free cloth to remove unwanted lubricant.
	Dry O-rings	Apply a thin layer of silicone lubricant (027055) to O-rings that are dry.
Nozzle retaining cap 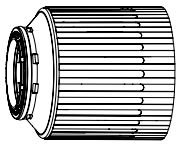	Damage Bad cut quality after replacing other consumables Damage O-rings	Replace the nozzle retaining cap.
	Dry O-rings	Apply a thin layer of silicone lubricant (027055) to O-rings that are dry.
Nozzle 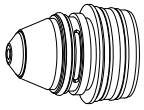	Erosion Blocked gas holes A center hole that is not circular Damaged O-rings	Replace the nozzle.
	Over-lubricated O-rings	Use a clean, lint-free cloth to remove unwanted silicone lubricant.
	Dry O-rings	Apply a thin layer of silicone lubricant (027055) to O-rings that are dry.

Table 37 - Inspection tasks for consumable parts (continued)

Inspect	Look for	Action if found
Swirl ring 	Chips or cracks Blocked gas holes Damaged O-rings	Replace the swirl ring.
	Dirt or debris	Use compressed air to remove dirt or debris. Replace the swirl ring if you find signs of damage.
	Over-lubricated O-rings	Use a clean, lint-free cloth to remove unwanted silicone lubricant.
	Dry O-rings	Apply a thin layer of silicone lubricant (027055) to O-rings that are dry.
Electrode 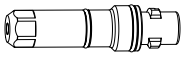	Damaged O-rings	Replace the electrode. Use the electrode torque tool (429013) to correctly tighten the electrode.
	Over-lubricated O-rings	Use a clean, lint-free cloth to remove unwanted lubricant.
	Dry O-rings	Apply a thin layer of silicone lubricant (027055) to O-rings that are dry.
	Emitter wear For guidance about how to identify emitter wear, refer to Examine the electrode for emitter wear on page 270.	Replace the electrode **and nozzle**. Use the electrode torque tool (429013) to correctly tighten the electrode.

If an electrode needs replacement because of emitter wear, **always replace the nozzle at the same time as the electrode**. Use the electrode torque tool (429013) to correctly tighten the electrode.

2. Clean the consumable parts that do not need replacement:
   a. Use a clean, lint-free cloth to wipe the internal and external surfaces.
   b. Use compressed air to remove debris from internal and external surfaces.

      The nozzle retaining cap can keep debris. Make sure to fully clean the retaining cap thoroughly.
   c. Use **clean water** if you choose to wash consumables parts in water.

Use water from the faucet to soak or rinse them. **Never use the water from a cutting table** to wash consumable parts. Cutting table water has contaminants that will cause damage to the consumable parts.

3. Apply a thin layer of silicone lubricant (027055) to each O-ring on all consumable parts.

   The O-rings should be shiny. Too much lubricant can prevent gas flow. Remove excess lubricant if found.

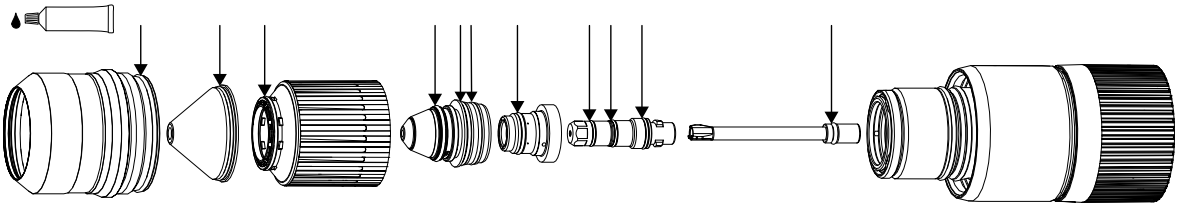

4. Install the consumables on the torch as shown.

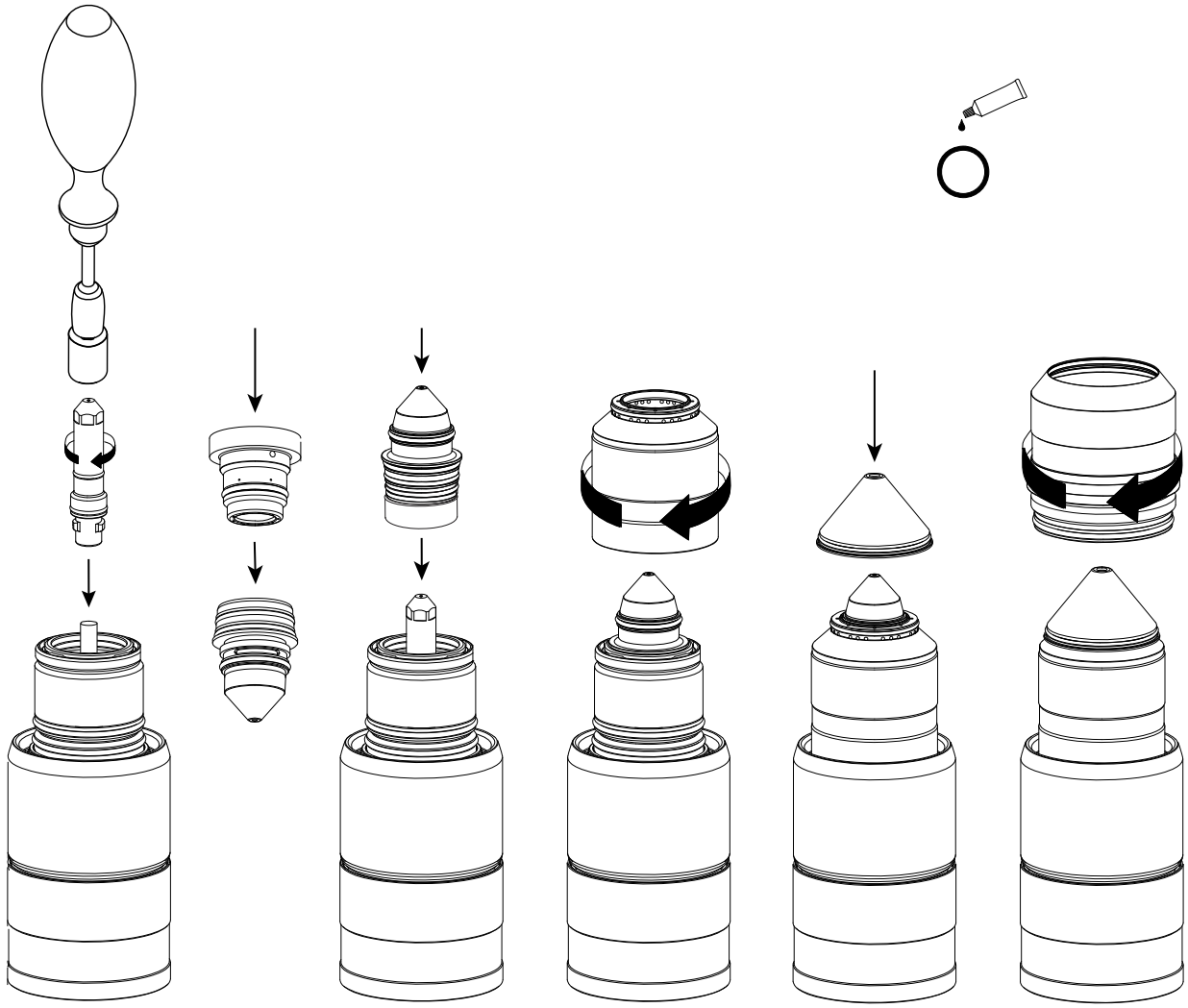

What to do next: Examine the torch receptacle on page 272.

Examine the electrode for emitter wear

Emitter wear can indicate when to replace the electrode. Increasing the number of starts and the arc-on time can cause the emitter to wear more quickly. Emitter wear can cause the cut quality to decrease. Your cut-quality requirements will indicate when to replace the electrode.

Figure 68 - Example of a new electrode

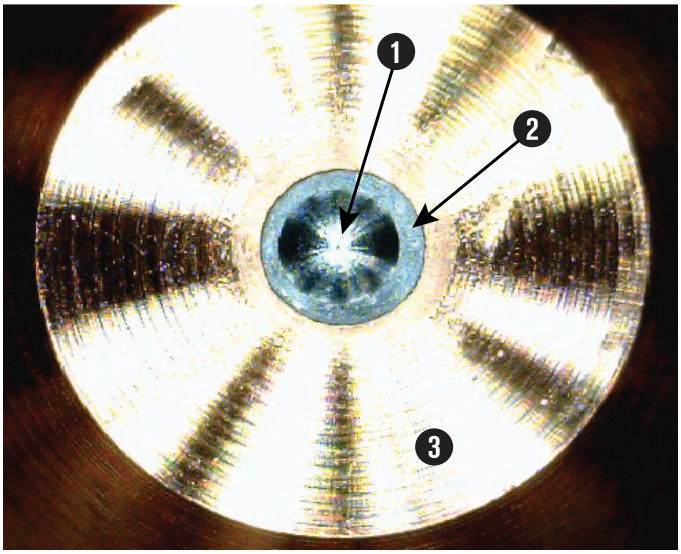

1 Electrode pit

2 Hafnium emitter

3 Electrode face

If an electrode needs replacement because of emitter wear, **always replace the nozzle at the same time as the electrode**. Use the electrode torque tool (429013) to correctly tighten the electrode.

Before you begin:

- Remove the power from the cutting system on page 253
- Remove the torch and consumable parts on page 139

1. Examine the electrode pit diameter for these conditions:
    a. If the diameter extends beyond the hafnium, replace the electrode and nozzle.



b. If you see a non-symmetrical, rough-edged pit and rough-surfaced electrode face, replace the electrode and nozzle.



2. Use an electrode pit-depth gauge to measure the pit depth on the electrode.

   A pit-depth gauge is available from Hypertherm.

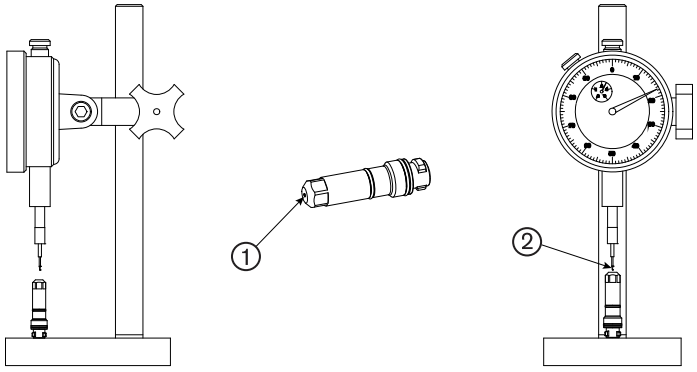

1 Electrode pit

2 Pit-depth gauge

The electrode shown is not to scale.

3. Replace the electrode and nozzle if your pit-depth measurement is outside of these guidelines:

Electrode amperage	Replacement pit depth [1]	Description
< 130 A	≥ 1 mm (0.04 in)	In general, for electrodes less than 130 A, replace the electrode when the pit depth is 1 mm (0.04 in) or more.
≥ 130 A and < 220 A	≥ 1.25 mm (0.05 in)	In general, for electrodes more than or equal to 130 A and less than 220 A, replace the electrode when the pit depth is 1.25 mm (0.05 in) or more.
≥ 220 A	≥ 1.5 mm (0.06 in)	In general, for electrodes more than or equal to 220 A, replace the electrode when the pit depth is 1.5 mm (0.06 in) or more.

1 Based on your cut-quality requirements, it can be necessary to replace your electrode at a pit depth that is shallower or deeper than these guidelines.

Examine the torch receptacle

Damage on the torch receptacle, especially on the O-ring and the receptacle body, can decrease system performance.

Before you begin:

- Remove the power from the cutting system on page 253.
- Remove the torch and consumable parts on page 139.

1. Examine the torch receptacle.

If you find cracks in the torch receptacle	Replace the torch receptacle. Refer to *Install the torch-lead assembly to the torch receptacle* in the instruction manual that came with your cutting system.
If you do not find cracks in the torch receptacle	Continue to the next step.

2. Examine the O-ring on the torch receptacle for cuts, nicks, or signs of damage.

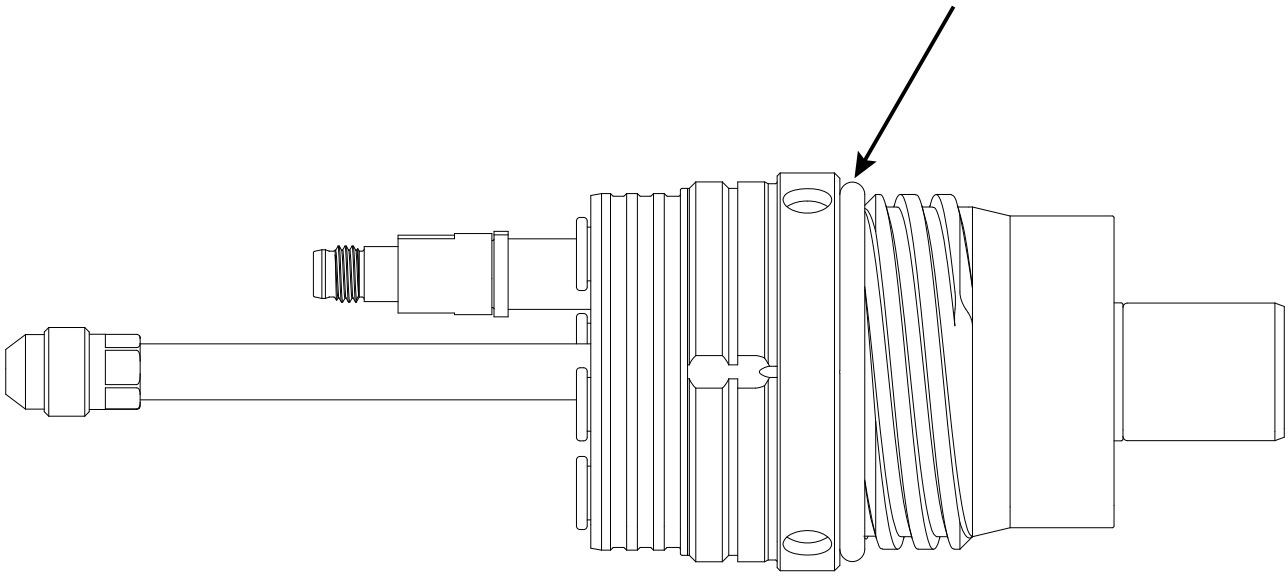

It is not necessary to apply lubricant to the O-ring on the torch receptacle. The O-ring on the torch receptacle is for dust protection only.

3. Replace the O-ring if it has damage or excess wear.

   Torch rebuild kits are available from Hypertherm.

4. Use a clean paper towel or lint-free cloth to clean the internal and external surfaces of the torch receptacle.
5. Use a cotton swab to clean internal surfaces that are not easy to touch.
6. Make sure that you do not let fibers stay on the internal surfaces of the torch receptacle.
7. Use compressed air to remove remaining particles from the torch receptacle.

What to do next: Install the torch in the torch receptacle on page 141.

Examine the torch lead

Examine the torch lead for signs of damage or loose connections. Make sure that the torch lead obeys bend-radius requirements in the instruction manual that came with your cutting system.

Before you begin:

- Remove the power from the cutting system on page 253.
- Remove the torch and consumable parts on page 139.

1. Examine the torch lead for kinks, cracks, cuts, or damage.

2. Replace the torch lead if you find these conditions.
3. Remove the collar on the torch-end of the torch lead:
    a. Loosen the hose clamp that holds the collar in position.
    b. Pull the collar away from the torch-end of the torch lead assembly.

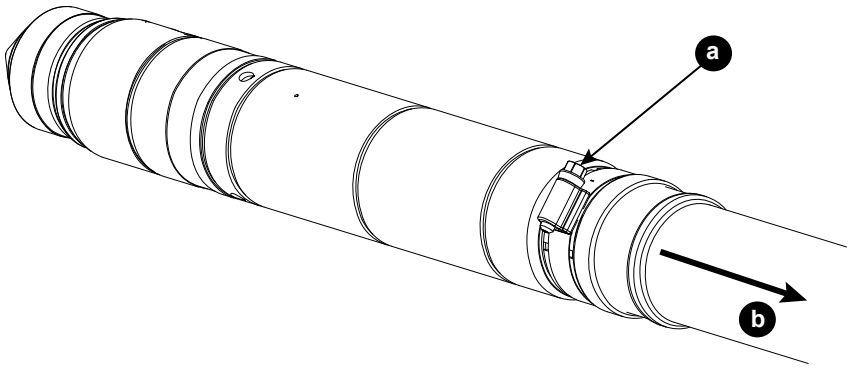

4. Remove the torch mounting sleeve:
    a. Use a spanner wrench to hold the torch stable.
    b. Loosen the torch mounting sleeve.
    c. Pull the torch mounting sleeve away from the torch.

    A spanner wrench is included in all of the consumable-parts kits. Refer to the *Parts List*. The spanner wrench helps to reduce torch movement when you loosen or tighten the torch-mounting sleeve.

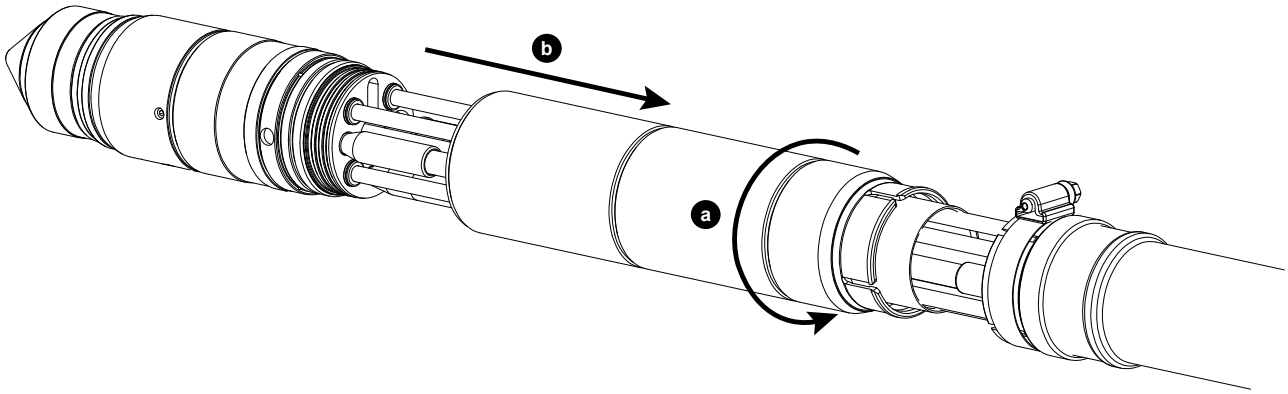

5. Make sure that all connections between the torch and torch lead are tight:
    a. If the pilot arc or ohmic cable connectors are not tight, use your fingers to tighten the connections, but do not make them too tight.
    b. If the coolant-return hose connector is not tight, use two wrenches to tighten the nut to 16.3 N·m –19.0 N·m (144 lbf·in – 168 lbf·in).

c. Examine the push-to-connect fittings for the Plasma Line A, Plasma Line B, coolant-supply, and shield-gas hoses to make sure that each hose is fully inserted and insertion mark is not in view.

   Use your fingers to push the connector until it stops, approximately 13 mm (0.5 inch) if these connections are not tight.

6. Install the torch mounting sleeve:

   a. Use a spanner wrench to hold the torch stable.

   b. Move the torch mounting sleeve in the direction of the torch.

   c. Use your hands to tighten the torch mounting sleeve connection.

   Do **not** overtighten the torch mounting sleeve.

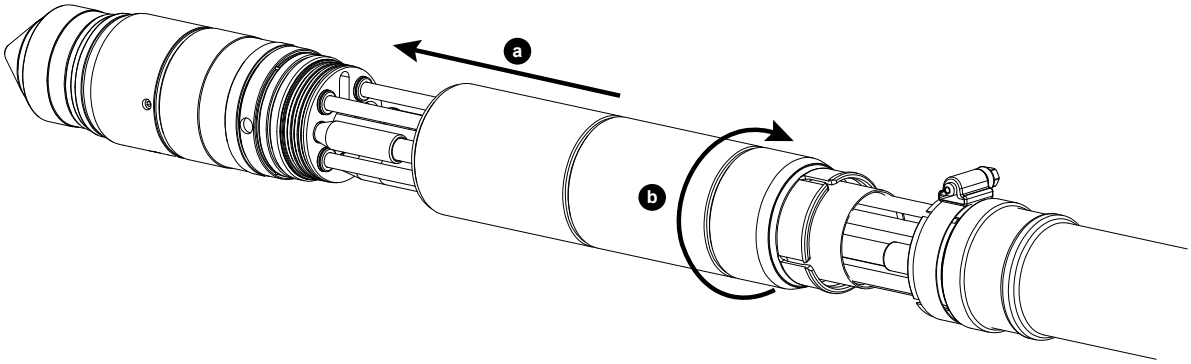

7. Put the collar in the correct position on the torch-end of the torch lead:

   a. Move the collar in the direction of the torch-end of the torch-lead assembly.

   b. Tighten the hose clamp that holds the collar in position.

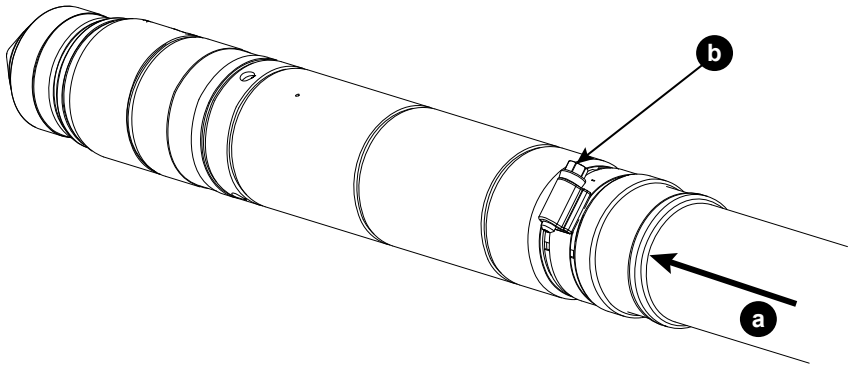

8. If you have a power track that supports the torch lead, look for torch-lead damage or loose connections that are signs that the torch lead movement is more than the 152.5 mm (6 inch) bend-radius requirement.

9. Adjust or replace the torch lead if necessary.

Coolant maintenance

If the CNC alerts you that the coolant level is low, remove the power from the cutting system and refill the coolant reservoir **immediately.**

Refer to Troubleshooting for low coolant flow on page 335 for more information.

⚠ WARNING



COOLANT CAN BE IRRITATING TO SKIN AND EYES AND HARMFUL OR FATAL IF SWALLOWED

Propylene glycol and benzotriazole are irritating to skin and eyes, and harmful or fatal if swallowed.

When you come into contact, flush skin or eyes with water. If swallowed, seek immediate medical attention.

NOTICE

LOW COOLANT LEVELS CAN DAMAGE THE CUTTING SYSTEM AND COOLANT PUMP

There is a risk of serious damage to the cutting system and to the coolant pump if you operate the cutting system with no coolant or with low coolant. If your coolant pump is damaged, pump replacement can be necessary.

Never operate the cutting system if you get a low coolant level notice.

NOTICE

AUTOMOTIVE ANTIFREEZE CAN CAUSE DAMAGE TO THE TORCH COOLANT SYSTEM

Antifreeze contains chemicals that can cause damage to the torch coolant system.

Never use automotive antifreeze as an alternative to Hypertherm coolant.

NOTICE
INCORRECT COOLANT CAN DAMAGE THE CUTTING SYSTEM Refer to Coolant requirements on page 57 for the correct type of coolant to use.

Coolant replacement and its significance

Hypertherm recommends that you replace all of the coolant at least once every six months, as part of routine preventive maintenance. More frequent replacement can be necessary because of environmental conditions, contaminants in your coolant, or diagnostic codes for coolant problems.

Adding new coolant to the reservoir when the coolant level is low is **not** the same as replacing all of the coolant. **All** of the coolant must be removed to flush the coolant system.

Before refilling the cutting system with new coolant, refer to Remove old coolant from the plasma cutting system on page 278.

The use of old coolant can decrease coolant flow, which can cause higher torch temperatures that shorten the life of consumable parts.

Make an estimate of the total coolant volume

Use these calculations to make an estimate for the total coolant volume for your plasma cutting system.

The coolant reservoir can contain a maximum of 15.1 liters (4 U.S. gallons). But when the cutting system is fully installed, the entire system can contain between 22.7 liters – 45 liters (6 U.S. gallons – 12 U.S. gallons).

More coolant is necessary for a cutting system with long leads than a cutting system with short leads.

- Make an estimate of total coolant volume in liters.

26	+	0.2534	X	Length of leads (**in meters**) between the plasma power supply and gas connect console for your cutting system	=	Total estimated volume (in liters)

- Make an estimate of total volume in U.S. gallons.

6.8	+	0.0204	X	Length of leads (**in feet**) between the plasma power supply and gas connect console for your cutting system	=	Total estimated volume (in U.S. gallons)

Remove old coolant from the plasma cutting system

Empty the reservoir, heat exchanger, hoses, and filter housing. Use compressed air to remove remaining coolant. Replace the coolant filter and pump screen if necessary. Clean all parts and look for debris before you connect the hoses.

Before you begin:

- Remove the power from the cutting system on page 253.
- Get a new coolant-pump filter and find the provided drainage tube.
- Get an empty container that holds the approximate total coolant volume for your cutting system. Refer to Make an estimate of the total coolant volume on page 277.

1. Remove the right-side (liquid-cooling-side) panel from the plasma power supply.

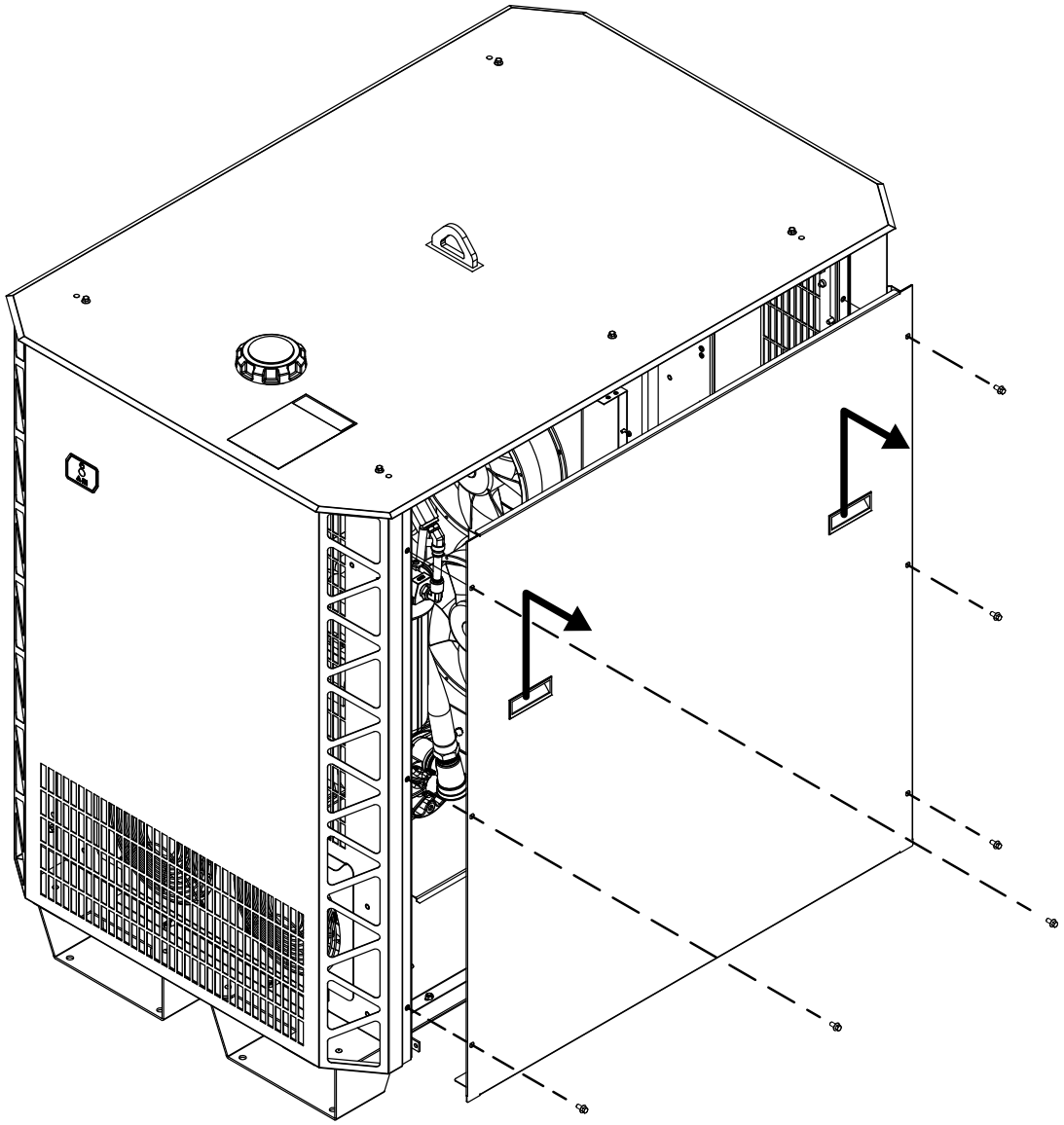

2. Remove the old coolant from the coolant reservoir:

    a. Connect the provided drainage tube (10083915) to the drainage fitting on the bottom of the coolant reservoir

    b. Keep the cap on the coolant reservoir inlet to slow coolant flowing for temporarily.

    c. Put the other end of the drainage tube in an empty container that holds the approximate total coolant volume for your cutting system.

    d. Move the valve for the drainage fitting to the open position.

    e. Remove the cap from the coolant reservoir to let coolant start flowing.

3. Remove the old coolant from the heat exchanger:

    a. Keep one end of the drainage tube connected to the drainage fitting and the other end of the drainage tube in the container.

    b. Remove the coolant-return hose (red band) from the coolant-return fitting (red) on the rear of the plasma power supply.

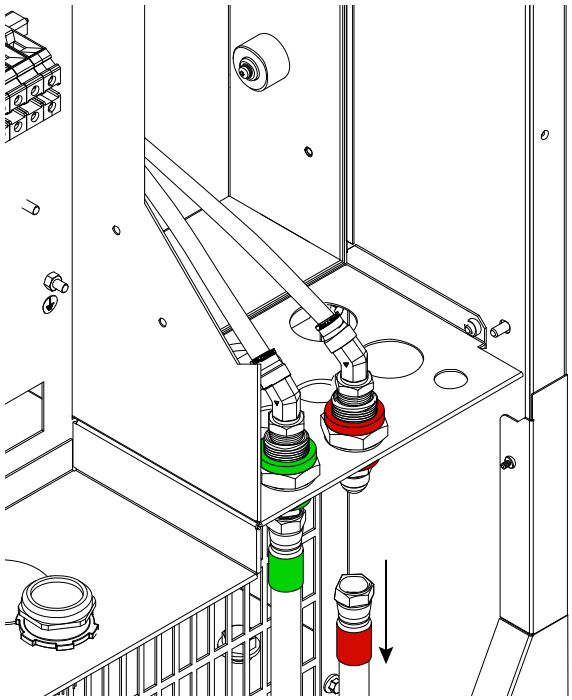

    c. Connect compressed air (no more than 6.89 bar/100 psi) to the coolant-return fitting (red, large red).

    d. For **no more** than 30 seconds, use compressed air to blow the coolant in the direction of the coolant reservoir and filter housing.

    System components require coolant to lubricate rotating surfaces. If air flows for more than 30 seconds, it can remove too much coolant and have a bad effect on lubrication.

e. Keep the coolant-return hose (red band) disconnected temporarily.

4. Remove the old coolant from the coolant pump:

   a. Put an empty container under the coolant-pump plug.

   b. Remove the plug and screen from the coolant pump.

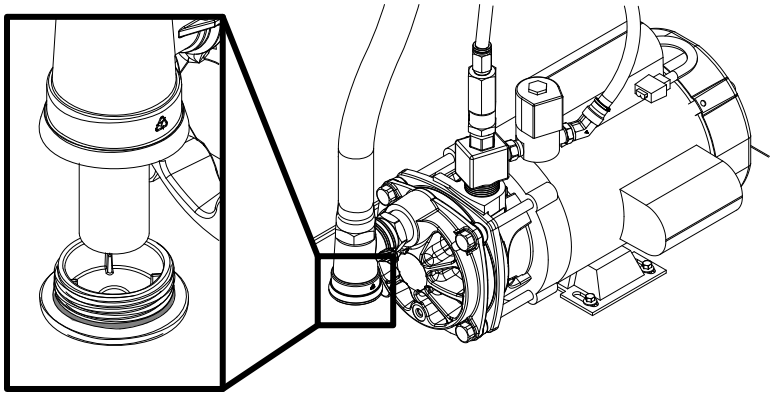

5. Clean and examine the coolant-pump screen and the O-ring on the coolant-pump plug:

   a. Remove debris from the screen and use clean water to remove small particles if necessary.

   b. Examine the screen for damage.

   c. Replace the screen (127559) if you find damage.

      Install again the original screen if no damage is found.

   d. Use a clean cloth to wipe the O-ring on the coolant-pump plug and examine the O-ring for damage.

   e. Replace the plug (428973) if you find O-ring damage.

      Install the original plug with provided O-ring if no O-ring damage is found.

   f. Install the coolant-pump plug on the coolant-pump housing.

6. Remove the old coolant from the coolant-filter housing and replace the coolant filter:

   a. Remove the filter housing.

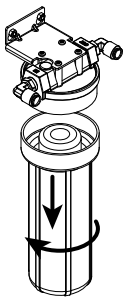

b. Discard all coolant from the filter housing and remove and discard the coolant filter.

   Recycle if possible. Discard if not.

c. Examine the internal surfaces of the coolant-filter housing for debris.

d. Remove debris from the internal surfaces and use clean water to remove small particles if necessary.

e. Install a new coolant-pump filter (027005) in the pump housing.

f. Install the filter housing.

7. Remove the old coolant from the coolant-supply and the coolant-return hoses:

   The hoses can hold a large volume of coolant.

   If you do not remove all of the old coolant from the hoses, the old and new coolant will mix. Mixing the old and new coolant causes contamination that will have a bad effect on coolant condition.

   a. Put the disconnected end of the coolant-return hose (red band) in an empty container that holds the approximate total coolant volume for your cutting system.

   b. Remove the coolant-supply hose (green band) from the coolant-supply fitting (green) on the rear or the plasma power supply.

   c. Connect compressed air (no more than 6.89 bar/100 psi) to the disconnected end of the coolant-supply hose (green band).

   d. For approximately three minutes, blow compressed air in the coolant-supply hose (green band).

   e. Continue to blow compressed air in the coolant-supply hose (green band) until coolant stops flowing out of the coolant-return hose (red band).

   f. After coolant stops flowing out of the coolant-return hose (red band), continue to the next step.

   g. Connect the coolant-return hose (red band) to the coolant-return fitting (red) and the coolant-supply hose (green band) to the coolant-supply (green) fitting.

Figure 69 - Coolant connectors on the rear of the plasma power supply

Figure 69 - Coolant connectors on the rear of the plasma power supply (continued)

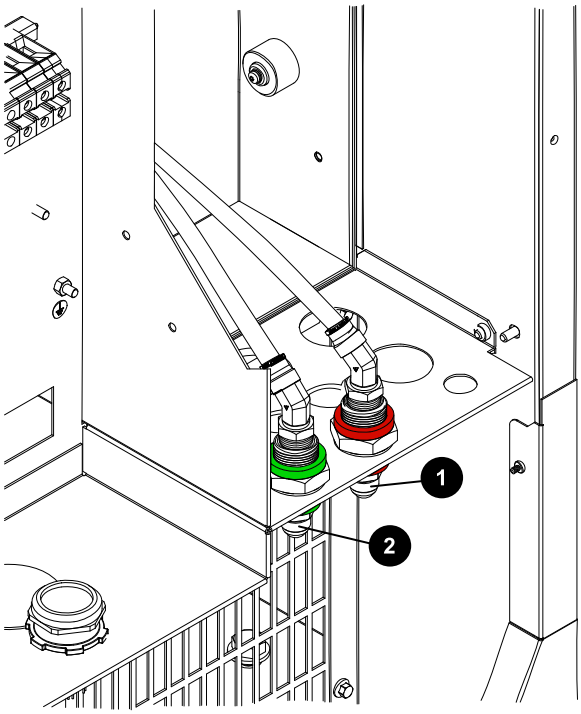

1 Coolant-return fitting (red)

2 Coolant-supply fitting (green)

What to do next: Install new coolant.

Refer to *Fill the cutting system with coolant* in the instruction manual that came with your cutting system.

8 Diagnostics and Troubleshooting

Safety considerations for troubleshooting

Before you start troubleshooting for a problem, make sure to read, understand, and comply with all of the safety instructions.

For more safety information, refer to Qualifications of service personnel on page 43 and the *Safety and Compliance Manual (80669C)*.

⚠ WARNING

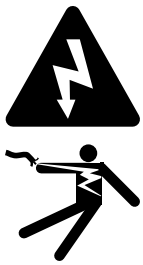

ELECTRIC SHOCK CAN KILL

The plasma power supply contains dangerous electric voltages that can seriously injure or kill you. Even if the plasma power supply is turned OFF, you can still get a serious electric shock if the plasma power supply remains connected to an electric power source.

Use extreme caution if you do diagnosis or maintenance tasks when the plasma power supply remains connected to an electric power source and the outer cover or panels are removed. All work that requires removal of the plasma power supply outer cover or panels must be done by a qualified technician. Refer to the *Safety and Compliance Manual (80669C)* for more safety information.

⚠ WARNING

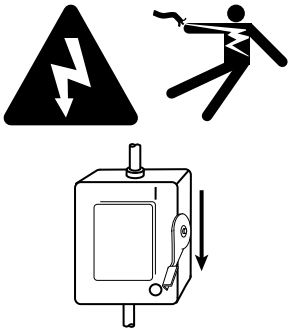

ELECTRIC SHOCK CAN KILL

If the line-disconnect switch is not in the OFF position you can get a serious electric shock. Electric shock can seriously injure or kill you.

The line-disconnect switch must be in the OFF position before you connect the power cord to the cutting system. It must REMAIN in the OFF position until all installation steps are complete. In the United States, use a "lock out/tag out" procedure until installation is complete. In other countries, follow the appropriate national and local safety procedures. Refer to the *Safety and Compliance Manual (80669C)* for more safety information.

⚠ WARNING



ELECTRIC SHOCK CAN KILL

Voltages in the cutting system can cause serious electric shock. Electric shock can seriously injure or kill you.

When the line-disconnect switch is in the ON position, there is line voltage throughout the cutting system. Use extreme caution if you do diagnosis or maintenance tasks when the line-disconnect switch is in the ON position.

⚠ WARNING

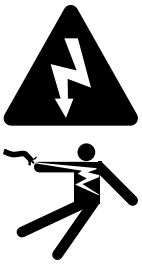

ELECTRIC SHOCK CAN KILL

Voltages at the terminal block and contactors can cause injury or death.

When the line-disconnect switch is in the ON position, there is line voltage at the contactor and the power distribution PCB. Use extreme caution when you measure the primary power in these areas.

⚠ WARNING





HYDROGEN GAS CAN CAUSE AN EXPLOSION OR FIRE

Hydrogen is a flammable gas that can cause an explosion or fire if it is not removed.

Keep flames away from cylinders and hoses that contain hydrogen. Keep flames and sparks away from the torch when using hydrogen as a plasma gas.

Consult your local safety, fire, and building code requirements for the storage and use of hydrogen.

Hypertherm recommends that you install an exhaust ventilation system to remove the hydrogen-enriched atmosphere that can collect when hydrogen is used as the plasma gas for cutting.

Flashback arrestors are REQUIRED to stop the spread of fire to the supply gases (unless a flashback arrestor is not available for a specific gas or pressure).

As an installer or user, you must supply the exhaust ventilation and flashback arrestors for your cutting system. You can get them from your cutting machine supplier.

⚠ WARNING





OXYGEN GAS CAN CAUSE A FIRE HAZARD

If you use oxygen as the plasma gas for cutting, it can cause a potential fire hazard due to the oxygen-enriched atmosphere that collects. A fire can occur if oxygen is not removed.

Hypertherm recommends that you install an exhaust ventilation system to remove the oxygen-enriched atmosphere that can collect when oxygen is used as the plasma gas for cutting.

Flashback arrestors are REQUIRED to stop the spread of fire to the supply gases (unless a flashback arrestor is not available for a specific gas or pressure).

As an installer or user, you must supply the exhaust ventilation and flashback arrestors for your cutting system. You can get them from your cutting machine supplier.

⚠ WARNING



MACHINE MOTION CAN CAUSE INJURY

The end-use customer and the cutting machine supplier are responsible for providing protection against the hazardous moving parts of this cutting system. Read and follow the instruction manual provided by the cutting machine supplier. Refer to the *Safety and Compliance Manual (80669C)* for more safety information.

⚠ CAUTION



MOVING BLADES CAN CAUSE INJURY

Keep your hands away from moving parts.

NOTICE

INCORRECT GAS PRESSURES CAN CAUSE BAD PERFORMANCE

Gas leaks or pressure and flow rates that are outside of recommended ranges can cause problems with system performance, result in bad cut quality, and shorten the life of consumables.

If the quality of the gas is bad or if the pressure setting is incorrect, it can decrease cut quality, cut speed, and cut thickness capabilities.

Make sure the incoming gas pressure aligns with system specifications.

NOTICE

RISK OF SPARKS

Sparking and damage to the printed circuit board (PCB) can occur.

Never fire an arc when a temporary jumper wire is installed on the PCB.

NOTICE

RUST IN GAS CYLINDERS CAN GET INTO THE GAS LINE

Rust can collect at the bottom of gas cylinders. If the rust mixes with the gas, it can get into the gas line and decrease cut quality and performance.

When you move gas cylinders, make sure that you do not put them on their side, roll, or shake them.

Initial inspection steps

Some conditions do not give a diagnostic code. For example, there are no diagnostic codes (and the cutting system does not work) if electric power is removed from the cutting system.

Before you try to identify a performance issue that does not cause a diagnostic code, make sure to first look for obvious problems or damage. Always start with the following inspection steps:

1. Make sure that the cutting system is connected to electric power.

   Refer to Connect electric power to the cutting system on page 147.

2. Make sure that the line-disconnect switch is set to ON.

   Refer to Line-disconnect switch requirements on page 45.

3. Examine each PCB.

4. Use a licensed electrician to measure the line voltage between the terminals that are inside of the plasma power supply.

For many troubleshooting procedures it is necessary to remove the power from the cutting system. To do this safely, use the following procedure. Even if you use the remote on-off switch to set the power to OFF, electricity stays inside the cutting system. You can still get a serious electric shock when the cutting system is connected to an electric power source.

Before you remove the power from the cutting system, it can be helpful to move the torch to the edge of the cutting table and then move the torch lifter to its highest point. This gives easier access to the torch and consumable parts.

Remove the power from the cutting system

1. Set the line-disconnect switch to the OFF position.

2. If the cutting system is not hard wired, disconnect the main power cord from the electric power.

If the cutting system is hard wired, you cannot disconnect the main power cord from the electric power.

Even if you remove the power from the cutting system, you can still get a serious electric shock if the plasma power supply stays connected to an electric power source. Use extreme care during service and maintenance when the cutting system is connected to electricity.

3. Make sure that the power-indicator LED is not illuminated on the plasma power supply, gas connect console, or TorchConnect console.

Examine each PCB

1. Remove the power from the cutting system.
2. Remove the external panel or panels from the system component that has the PCB that you want to examine.

   Refer to PCB names and locations on page 290.
3. Examine the PCB for:
   - Loose or disconnected PCB connectors
   - Loose or disconnected PCB assemblies
   - Discoloration
   - Damage
4. If you find a PCB that is loose, reconnect it if possible.
5. If you find a PCB that has damage or discoloration, replace it.

   Refer to Plasma power supply parts on page 403 for part numbers and reorder information.
6. If each PCB is in good condition, measure the line voltage between the terminals inside of the plasma power supply.
7. If you cannot find or correct the problem, speak to your cutting machine supplier or regional Hypertherm Technical Service team.

It is necessary for the cutting system to have electric power to measure line voltage. Use extreme caution if you do diagnosis or maintenance tasks when the plasma power supply stays plugged in and the panels on the plasma power supply are removed.

Figure 70 - Main power cord wire color and terminal location

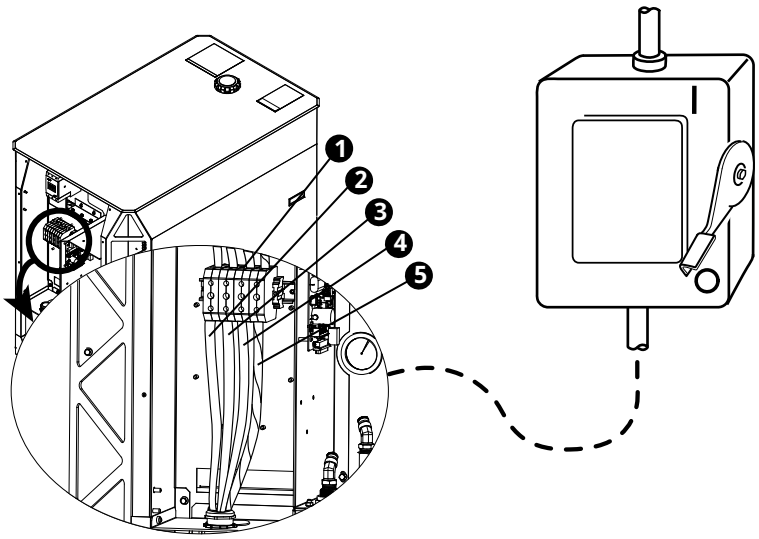

		Wire color codes for North America	Wire color codes for Europe, Asia, and most locations outside of North America
1	TB1 terminal	–	–
2	U	Black	Black
3	V	White	Blue
4	W	Red	Brown
5	GND (PE) (earth ground) ⏚	Green/yellow	Green/yellow

Measure the line voltage between the terminals inside the plasma power supply

1. Measure the line voltage between the terminals in the following order:

   - ☐ U to V
   - ☐ U to W
   - ☐ V to W

   Do a check of each line to ground.

2. Find if the voltage between any two of the three lines is equal to the supply voltage.
3. If any one line is equal to or 10% greater than the other two lines, examine the incoming electric supply lines.

If the incoming electric supply lines are good, speak to a licensed electrician or the electric company that supplies electricity for more information.

4. If the voltage between any two of the three lines is less than the supply voltage:
    a. Remove the power from the cutting system.
    b. Examine the power cord for damage.
    c. Examine the fuses at the line-disconnect switch for continuity.
    d. Repair or replace any parts that are defective or have damage, if found.
5. Continue to do these steps until the line voltage between any two of the three lines is equal to the supply voltage.

PCB names and locations

PCB assemblies are in various parts of the system.

PCB name	Location	Drawings that show PCB locations
Power distribution PCB	Plasma power supply	Control side – view 1 on page 410
Control PCB	Plasma power supply	Control side – view 2 on page 411
Chopper assembly PCB	Plasma power supply	Control side – view 2 on page 411
Start-circuit assembly PCB	Plasma power supply	Control side – view 1 on page 410
I/O PCB	Plasma power supply	Control side – view 2 on page 411
Fan power distribution PCB	Plasma power supply	Fans on page 405
Control PCB	Gas connect console	Gas connect console manifold side parts on page 416
High-frequency, high-voltage ignition PCB	Gas connect console	Gas connect console high-voltage side parts (CorePlus shown) on page 415
Ohmic contact PCB	TorchConnect console	TorchConnect console manifold side – view 1 on page 427
Control PCB	TorchConnect console	TorchConnect console manifold side – view 1 on page 427

Diagnostic code conventions

It is important to know these abbreviations and categories when you see diagnostic codes on the CNC or XPR web interface.

To do troubleshooting for the diagnostic codes that show on the CNC or XPR web interface, refer to the Diagnostic codes on page 291 table.

Diagnostic codes can include the following abbreviations:

- **GCC:** Gas connect console
- **CAN:** Controller area network
- **TCC:** Torch connect console
- **t/o:** Time out
- **HF:** High frequency
- **IGBT:** Insulated-gate bipolar transistor
- **Ch1:** Chopper
- **DC:** Direct current, current
- **Ind:** Inductor
- **CTRLFAN:** Control fan
- **MAGFAN:** Magnetics fan
- **HXFAN:** Heat exchanger fan

Table 38 - Diagnostic codes in the web interface

Type	Description
Information	These codes contain information about the current conditions. In many cases, operator action is not necessary for Information codes. If action is necessary, the steps are usually simple.
Alert	These codes are for conditions that can decrease productivity or quality. **Find a solution to an Alert code as soon as possible.**
Error	These codes are for conditions that usually decrease productivity or quality, or cause damage to cutting system components. **Find a solution to an Error code as soon as possible.**
Failure	These codes are for conditions where you cannot start the arc until the condition is resolved. Failure mode protects the cutting system and system components from permanent damage.

Certain codes can occur if the cutting system has old firmware. Make sure that you have the most recent XPR firmware. Log into the Xnet at www.hypertherm.com to download it.

If you cannot find or correct the problem, speak to your cutting machine supplier or regional Hypertherm Technical Service team.

Diagnostic codes

Use this table to identify a diagnostic code and where to find more troubleshooting information about it.

Table 39 - Diagnostic code descriptions

Code	Priority	Description	XPR models	Corrective action
500	Failure	GCC->Main CAN t/o	All models	CAN communication troubleshooting for gas connect consoles on page 319
501	Failure	Mix->Main CAN t/o	All models	CAN communication troubleshooting for mixing modules in OptiMix consoles on page 322
503	Failure	TCC->Main CAN t/o	All models	CAN communication troubleshooting for TorchConnect consoles on page 324
504	Failure	Ch1->Main CAN t/o	All models	CAN communication troubleshooting for choppers on page 326
505	Failure	Ch2->Main CAN t/o	XPR300, XPR460®	
506	Failure	Ch3->Main CAN t/o	XPR460	
507	Failure	Main no CAN	All models	1. CAN communication troubleshooting for choppers on page 326 2. CAN communication troubleshooting for gas connect consoles on page 319 3. CAN communication troubleshooting for mixing modules in OptiMix consoles on page 322 (if applicable) 4. CAN communication troubleshooting for TorchConnect consoles on page 324
508	Error	CAN Busy	All models	
509	Failure	Cooler->Main CAN t/o	XPR460	This system does not use this code.
510	Failure	Main->GCC CAN t/o	All models	CAN communication troubleshooting for gas connect consoles on page 319
511	Failure	Main->Mix CAN t/o	All models	CAN communication troubleshooting for mixing modules in OptiMix consoles on page 322
513	Failure	Main->TCC CAN t/o	All models	CAN communication troubleshooting for TorchConnect consoles on page 324
514	Failure	Main->Ch1 CAN t/o	All models	CAN communication troubleshooting for choppers on page 326
515	Failure	Main->Ch2 CAN t/o	XPR300, XPR460	
516	Failure	Main->Ch3 CAN t/o	XPR460	
519	Failure	Main->Cooler CAN t/o	XPR460	This system does not use this code.
520	Alert	Ignite t/o (no pilot arc)	All models	Troubleshooting for an ignition timeout on page 328
521	Alert	Pilot arc t/o (no arc transfer)	All models	Troubleshooting for a pilot arc timeout on page 329

Table 39 - Diagnostic code descriptions (continued)

Code	Priority	Description	XPR models	Corrective action
522	Alert	Preflow t/o	All models	Troubleshooting for gas flow process timeouts on page 330
523	Error	Preflow purge t/o	All models	
524	Error	Cutflow purge t/o	All models	
525	Error	Inert gas purge t/o	All models	
530	Alert	Low psi–Line A	All models	Troubleshooting for low outlet gas pressure on page 331
531	Alert	Low psi–Line B	All models	
532	Alert	Low psi–H_2O	All models	Troubleshooting for low shield water pressure on page 332
533	Alert	Low psi–F5	All models	Troubleshooting for low outlet gas pressure on page 331
534	Alert	Low psi–Shield	All models	Troubleshooting for low shield gas pressure on page 333
540	Error	Low flow 1–Coolant	All models	Troubleshooting for low coolant flow on page 335
542	Failure	Low flow–Coolant	All models	
543	Error	High flow 1–Coolant	All models	Troubleshooting for high coolant flow on page 337
544	Failure	High flow–Coolant	All models	
550	Alert	No plasma arc	All models	Troubleshooting for low current on page 338
552	Alert	DC below limit–Ch1	All models	
553	Alert	DC below limit–Ch2	XPR300, XPR460	
554	Alert	DC below limit–Ch3	XPR460	
555	Failure	DC exceeds limit–Ch1	All models	Troubleshooting for high current on page 339
556	Failure	DC exceeds limit–Ch2	XPR300, XPR460	
557	Failure	DC exceeds limit–Ch3	XPR460	
560	Error	Over temp–Ch1	All models	Troubleshooting for over-temperature faults for choppers and coolant on page 340
561	Error	Over temp–Ch2	XPR300, XPR460	
562	Error	Over temp–Ch3	XPR460	

Table 39 - Diagnostic code descriptions (continued)

Code	Priority	Description	XPR models	Corrective action
570	Alert	Start on powerup	All models	Troubleshooting for start switch faults on page 344
571	Alert	Start on wait-start	All models	
574	Info	Start removed preflow	All models	
575	Info	Start removed ignite	All models	
576	Info	Start removed pilot	All models	
577	Info	Start removed ramp up	All models	
580	Error	Over temp–Ind 1	All models	Troubleshooting for over-temperature faults for inductors and transformers on page 346
581	Error	Over temp–Ind 2	All models	
582	Error	Over temp–Ind 3	XPR300, XPR460	
583	Error	Over temp–Ind 4	XPR300, XPR460	
584	Error	Over temp–Ind 5	XPR460	
585	Error	Over temp–Ind 6	XPR460	
586	Error	Over temp–Xfmr	All models	
587	Error	Over temp–Coolant	All models	Troubleshooting for over-temperature faults for choppers and coolant on page 340
589	Error	Over temp–Xfmr2	XPR460	This system does not use this code.
600	Error	No TCC found	All models	CAN communication troubleshooting for TorchConnect consoles on page 324
601	Error	No Chopper 1 found	All models	CAN communication troubleshooting for choppers on page 326
602	Error	No GCC found	All models	CAN communication troubleshooting for gas connect consoles on page 319
604	Alert	No Chopper 2 found	XPR300, XPR460	This system does not use this code.
605	Error	No cooler found	XPR460	This system does not use this code.
606	Alert	No Chopper 3 found	XPR460	This system does not use this code.

Table 39 - Diagnostic code descriptions (continued)

Code	Priority	Description	XPR models	Corrective action
610	Failure	Ch1 Torch Protect ChA	All models	Troubleshooting for consumable part failure or no chopper current on page 349
611	Failure	Ch1 Torch Protect ChB	All models	
612	Failure	Ch2 Torch Protect ChA	XPR300, XPR460	
613	Failure	Ch2 Torch Protect ChB	XPR300, XPR460	
614	Failure	Ch3 Torch Protect ChA	XPR460	
615	Failure	Ch3 Torch Protect ChB	XPR460	
620	Alert	Arc stretch detected	All models	Troubleshooting for a ramp-down error on page 350
621	Failure	Over voltage–DC bus	All models	Troubleshooting for high DC bus voltage on page 351
622	Failure	Under voltage–DC bus	All models	Troubleshooting for low DC bus voltage on page 351
623	Error	Ch1 DC at idle	All models	Troubleshooting for idle choppers with current on page 352
624	Error	Ch2 DC at idle	XPR300, XPR460	
625	Error	Ch3 DC at idle	XPR460	
626	Alert	No DC output–Ch1	All models	Troubleshooting for consumable part failure or no chopper current on page 349
627	Alert	No DC output–Ch2	XPR300, XPR460	
628	Alert	No DC output–Ch3	XPR460	
631	Failure	DC at wait-start	All models	Troubleshooting for current sensor faults on page 353
640	Info	No error	All models	No operator action is necessary. ▪ XPR action: None ▪ Code cancels with: Is not applicable.
642	Info	System powered	All models	No operator action is necessary. ▪ XPR action: None ▪ Code cancels with: Start, set process, or remote on-off

Table 39 - Diagnostic code descriptions (continued)

Code	Priority	Description	XPR models	Corrective action
643	Info	No process loaded	All models	Select a process to stop the Initial Checks (2) state of operation and start the Gas Purge/Pump On state (3). There is no limit for how long the system waits for input. Refer to Sequence of operation on page 223. ▪ XPR action: None ▪ Code cancels with: Start, set process, or remote on-off
645	Info	System is off	All models	No operator action is necessary. Plasma cutting system operation continues when the remote on-off switch is set to the ON position. Refer to Sequence of operation on page 223. ▪ XPR action: None ▪ Code cancels with: Remote on-off
646	Info	System turned off	All models	No operator action is necessary. Plasma cutting system operation continues when the remote on-off switch is set to the ON position. Refer to Sequence of operation on page 223. ▪ XPR action: Shut down ▪ Code cancels with: Remote on-off
647	Info	Process selected	All models	No operator action is necessary. ▪ XPR action: None ▪ Code cancels with: Start, set process, or remote on-off
648	Info	Manual mode	All models	Troubleshooting for manual-set mode faults on page 354
651	Alert	HF timeout	All models	This code occurs when the high frequency output is on for more than 350 ms. If you cannot find or correct the problem, speak to your cutting machine supplier or regional Hypertherm Technical Service team. ▪ XPR action: None ▪ Code cancels with: Set process or remote on-off
652	Error	Block def over limit	All models	This code occurs during the ramp-up or ramp-down state if the process block time definition is more than five seconds. If you cannot find or correct the problem, speak to your cutting machine supplier or regional Hypertherm Technical Service team. ▪ XPR action: Shut down ▪ Code cancels with: Remote on-off

Table 39 - Diagnostic code descriptions (continued)

Code	Priority	Description	XPR models	Corrective action
653	Error	Block time over limit	All models	This code occurs during the ramp-up or ramp-down state if the process block timer is more than five seconds. If you cannot find or correct the problem, speak to your cutting machine supplier or regional Hypertherm Technical Service team. ▪ XPR action: Shut down ▪ Code cancels with: Remote on-off
654	Error	Ch1 ArcOn Timeout	All models	Troubleshooting for arc timeouts during the Ignite state on page 355
655	Alert	Current (DC) during preflow	All models	Troubleshooting for current in chopper during preflow on page 355
656	Error	Default case	All models	This code occurs when a default case is run unintentionally. If you cannot find or correct the problem, speak to your cutting machine supplier or regional Hypertherm Technical Service team. ▪ XPR action: Shut down ▪ Code cancels with: Remote on-off
657	Error	Bad block type	All models	This code occurs when the block type is incorrect. If you cannot find or correct the problem, speak to your cutting machine supplier or regional Hypertherm Technical Service team. ▪ XPR action: Shut down ▪ Code cancels with: Remote on-off
658	Alert	Block def under limit	All models	This code occurs when the process block duration is less than the minimum. If you cannot find or correct the problem, speak to your cutting machine supplier or regional Hypertherm Technical Service team. ▪ XPR action: End of cycle ▪ Code cancels with: Start, set process, or remote on-off

Table 39 - Diagnostic code descriptions (continued)

Code	Priority	Description	XPR models	Corrective action
660	Error	Thermistor Fault–Ind 1	All models	Use a digital multimeter to measure the resistance from the thermistor. Refer to Measure resistance from thermistors on page 315. ▪ XPR action: Shut down ▪ Code cancels with: Remote on-off
661	Error	Thermistor Fault–Ind 2	All models	
662	Error	Thermistor Fault–Ind 3	XPR300, XPR460	
663	Error	Thermistor Fault–Ind 4	XPR300, XPR460	
664	Error	Thermistor Fault–Ind 5	XPR460	
665	Error	Thermistor Fault–Ind 6	XPR460	
666	Error	Thermistor Fault–Xfmr	All models	
667	Error	Thermistor Fault–Ch1	All models	Use a digital multimeter to measure the resistance from the thermistor. Refer to Measure resistance from thermistors on page 315. ▪ XPR action: Ramp down ▪ Code cancels with: Remote on-off
668	Error	Thermistor Fault–Ch2	XPR300, XPR460	
669	Error	Thermistor Fault–Ch3	XPR460	
670	Error	Thermistor Fault–Coolant	All models	Use a digital multimeter to measure the resistance from the thermistor. Refer to Measure resistance from thermistors on page 315. ▪ XPR action: Shut down ▪ Code cancels with: Remote on-off
671	Error	No Thermistor–Ind 1	All models	
672	Error	No Thermistor–Ind 2	All models	
673	Error	No Thermistor–Ind 3	XPR300, XPR460	
674	Error	No Thermistor–Ind 4	XPR300, XPR460	
675	Error	No Thermistor–Ind 5	XPR460	
676	Error	No Thermistor–Ind 6	XPR460	
677	Error	No Thermistor–Xfmr	All models	
678	Error	No Thermistor–Ch1	All models	Make sure that the two wires for J9 are fully engaged. Use a digital multimeter to measure the resistance from the thermistor. Refer to Measure resistance from thermistors on page 315. ▪ XPR action: Ramp down ▪ Code cancels with: Remote on-off
679	Error	No Thermistor–Ch2	XPR300, XPR460	
680	Error	No Thermistor–Ch3	XPR460	

Table 39 - Diagnostic code descriptions (continued)

Code	Priority	Description	XPR models	Corrective action
681	Error	No Thermistor–Coolant	All models	Use a digital multimeter to measure the resistance from the thermistor. Refer to Measure resistance from thermistors on page 315. ▪ XPR action: Shut down ▪ Code cancels with: Remote on-off
682	Error	No Thermistor–Xfmr2	XPR460	
683	Error	Thermistor Fault–Xfmr2	XPR460	
691	Error	Node reset	All models	Troubleshooting for a console reset message on page 356
695	Alert	Low inlet H_2-Mix (OptiMix only)	All models	Troubleshooting for low inlet pressure for hydrogen, argon, or nitrogen on page 357
696	Alert	Low inlet Ar-Mix (OptiMix only)	All models	
697	Alert	Low inlet N_2-Mix (OptiMix only)	All models	
699	Error	Mix Fault (OptiMix only)	All models	No operator action is necessary. ▪ XPR action: Ramp down ▪ Code cancels with: Set process or remote on-off
700	Alert	Gas Inlet F5–GCC (VWI or OptiMix only)	All models	Troubleshooting for low inlet pressure for F5 gas on page 358
701	Alert	Low Inlet H_2O–GCC (VWI or OptiMix only)	All models	Troubleshooting for low inlet pressure for water on page 359
702	Alert	Shield Gas Inlet N_2–TCC	All models	▪ Troubleshooting for shield gas inlet pressure in the TorchConnect console on page 361 ▪ Troubleshooting for process-gas inlet pressure faults in the TorchConnect console for OptiMix systems on page 363
703	Alert	Shield Gas Inlet O_2–TCC	All models	Troubleshooting for shield gas inlet pressure in the TorchConnect console on page 361
704	Alert	Shield Gas Inlet Air–TCC	All models	
705	Alert	Shield Gas Inlet Ar–TCC	All models	▪ Troubleshooting for shield gas inlet pressure in the TorchConnect console on page 361 ▪ Troubleshooting for process-gas inlet pressure faults in the TorchConnect console for OptiMix systems on page 363

Table 39 - Diagnostic code descriptions (continued)

Code	Priority	Description	XPR models	Corrective action
706	Error	No sensor P1–TCC	All models	Troubleshooting for pressure transducer faults on page 367
707	Error	No sensor P2–TCC	All models	
708	Error	No sensor P3–TCC	All models	
709	Error	No sensor P4–TCC	All models	
710	Error	No sensor P5–TCC	All models	
711	Error	No sensor P14–TCC	All models	
712	Error	No sensor P6–GCC (VWI or OptiMix only)	All models	
713	Error	No sensor P7–GCC (VWI or OptiMix only)	All models	
714	Error	No sensor P8–GCC (VWI or OptiMix only)	All models	
715	Error	No sensor P9–GCC	All models	
716	Alert	Set process denied	All models	Troubleshooting for invalid processes on page 369
717	Alert	Low voltage–mix (OptiMix only)	All models	Confirm the output voltage of the 24 VDC power source in the gas connect console. Make sure that the output voltage is 24 VDC. ▪ XPR action: Ramp down ▪ Code cancels with: Set process or remote on-off
718	Alert	High voltage–mix (OptiMix only)	All models	
719	Alert	Mix pwm 100% (OptiMix only)	All models	Troubleshooting for duty cycle limit on proportional valve supply voltage on page 375
720	Alert	Mix P21>Pin (OptiMix only)	All models	Troubleshooting for pressure out is greater than pressure in on page 375
721	Error	Mix checksum (OptiMix only)	All models	Troubleshooting for gas mixture faults on page 376
722	Error	Mix flow cal (OptiMix only)	All models	
723	Error	Mix pressure cal (OptiMix only)	All models	
724	Error	Mix I2C1 (OptiMix only)	All models	Troubleshooting for gas mixture communication errors on page 377
725	Error	Mix I2C2 (OptiMix only)	All models	

Table 39 - Diagnostic code descriptions (continued)

Code	Priority	Description	XPR models	Corrective action
726	Error	Mix system clock (Opti-Mix only)	All models	Troubleshooting for gas mixture faults on page 376
730	Alert	Solenoid error V1	All models	Troubleshooting for solenoid valve V1 in the Torch-Connect console on page 378
733	Alert	Solenoid error V4	All models	Troubleshooting for solenoid valves V4 – V12 in the TorchConnect console on page 378
734	Alert	Solenoid error V5	All models	
735	Alert	Solenoid error V6	All models	
736	Alert	Solenoid error V7	All models	
737	Alert	Solenoid error V8	All models	
738	Alert	Solenoid error V9	All models	
739	Alert	Solenoid error V10	All models	
740	Alert	Solenoid error V11	All models	
741	Alert	Solenoid error V12	All models	
742	Alert	Mix I2C1 Alert (OptiMix only)	All models	Troubleshooting for gas mixture communication errors on page 377
743	Alert	Mix I2C2 Alert (OptiMix only)	All models	
744	Alert	Low Speed–MagFan 1	All models	Troubleshooting for low fan speeds – MAGFAN on page 380
745	Alert	Low Speed–MagFan 2	All models	
746	Alert	Low Speed–MagFan 3	XPR460	
747	Alert	Low Speed–CabFan 1	XPR460	This system does not use this code.
748	Alert	Low Speed–HxFan 1	All models	Troubleshooting for low fan speeds – HXFAN on page 382
749	Alert	Low Speed–HxFan 2	XPR300, XPR460	
750	Alert	Low Speed–CtrlFan 1	XPR170, XPR300	Troubleshooting for low fan speeds – CTRLFAN 1 / CAB FAN 1 on page 383
751	Alert	Low Speed–CtrlFan 2	XPR170, XPR300	Troubleshooting for low fan speeds – CTRLFAN 2 on page 384

Table 39 - Diagnostic code descriptions (continued)

Code	Priority	Description	XPR models	Corrective action
752	Error	Phase Fault–Ch1	All models	Troubleshooting for phase errors in choppers on page 385
753	Error	Phase Fault–Ch2	XPR300, XPR460	
754	Error	Phase Fault–Ch3	XPR460	
755	Alert	Low level–Coolant	All models	Fill the coolant reservoir with coolant. Refer to Fill the cutting system with coolant on page 217. ▪ XPR action: None ▪ Code cancels with: Set process or remote on-off
756	Info	Leak test results	All models	Do a gas leak test on page 307
757	Alert	DC work exceeds limit	All models	Make sure that you have the most recent XPR firmware. You can log into the Xnet at www.hypertherm.com to download it. If you cannot find or correct the problem, speak to your cutting machine supplier or regional Hypertherm Technical Service team. ▪ XPR action: End of cycle ▪ Code cancels with: Start, set process, or remote on-off
758	Error	Main 24V dip	All models	Make sure that you have the most recent XPR firmware. You can log into the Xnet at www.hypertherm.com to download it. If you cannot find or correct the problem, speak to your cutting machine supplier or regional Hypertherm Technical Service team. ▪ XPR action: End of cycle ▪ Code cancels with: Set process or remote on-off
759	Alert	GCC 24V bus low	All models	Make sure that you have the most recent XPR firmware. You can log into the Xnet at www.hypertherm.com to download it. If you cannot find or correct the problem, speak to your cutting machine supplier or regional Hypertherm Technical Service team. ▪ XPR action: Ramp down ▪ Code cancels with: Set process or remote on-off
768	Alert	Gas Inlet – O_2 Line A	All models	Troubleshooting for gas inlet pressure faults on page 386

Table 39 - Diagnostic code descriptions (continued)

Code	Priority	Description	XPR models	Corrective action
769	Alert	Gas Inlet – Argon Line B	All models	▪ Troubleshooting for gas inlet pressure faults on page 386 ▪ Troubleshooting for process-gas inlet pressure faults in the TorchConnect console for OptiMix systems on page 363
770	Alert	Gas Inlet – N_2 Line B	All models	
771	Alert	Gas Inlet – Air Line A	All models	Troubleshooting for gas inlet pressure faults on page 386
772	Alert	High inlet line A	All models	Decrease the air or O_2 inlet pressure. ▪ XPR action: Ramp down ▪ Code cancels with: Set process or remote on-off
774	Alert	P5 >= P2	All models	Increase the air or O_2 inlet pressure. ▪ XPR action: Ramp down ▪ Code cancels with: Set process or remote on-off
775	Alert	Node update	All models	The firmware was updated for a component. No steps are necessary unless the result is unsatisfactory.. ▪ XPR action: None ▪ Code cancels with: Start, set process, or remote on-off
779	Error	Ch1 15V bus	All models	Troubleshooting for high or low chopper voltage on page 387
780	Error	Ch2 15V bus	XPR300, XPR460	
781	Error	Ch3 15V bus	XPR460	
782	Alert	Low psi–P2	All models	Increase the air or O_2 inlet pressure. ▪ XPR action: None ▪ Code cancels with: Set process or remote on-off
784	Error	Main 24V high	All models	Troubleshooting for high voltage on the 24 V power supply on page 388
789	Alert	Fieldbus fault	All models	Troubleshooting for fieldbus communication faults on page 388
790	Error	Eco mode timeout	XPR460	This system does not use this code.

Table 39 - Diagnostic code descriptions (continued)

Code	Priority	Description	XPR models	Corrective action
791	Error	No Thermistor–Con Xfmr	All models	These codes occur when the main control PCB cannot find a temperature sensor for the control transformer, or the temperature sensor is shorted. Use a digital multimeter to measure the resistance from the thermistor. Refer to Measure resistance from thermistors on page 315. ▪ XPR action: Shut down ▪ Code cancels with: Remote on-off
792	Error	Thermistor Fault–Con Xfmr	All models	
793	Error	Over temp–Con Xfmr	All models	Troubleshooting for over-temperature faults for inductors and transformers on page 346
794	Alert	No MAC found	All models	This code occurs when the main control PCB cannot use a MAC address from the EEPROM. If you cannot find or correct the problem, speak to your cutting machine supplier or regional Hypertherm Technical Service team. ▪ XPR action: None ▪ Code cancels with: Start, set process, or remote on-off
795	Alert	Cooler 24V	XPR460	This system does not use this code.

Table 39 - Diagnostic code descriptions (continued)

Code	Priority	Description	XPR models	Corrective action
797	Error	Firmware Version Mismatch	All models	This code occurs when one or more of the firmware versions for the different cutting system components do not have the same major revision of the firmware and are not compatible. Make sure that you have the most recent XPR firmware. You can log into the Xnet at www.hypertherm.com to download it. If you cannot find or correct the problem, speak to your cutting machine supplier or regional Hypertherm Technical Service team. ▪ XPR action: None ▪ Code cancels with: Remote on-off
798	Info	USB firmware update	All models	This code shows the result of a firmware update after an automatic update from a USB memory stick. ▪ XPR action: None ▪ Code cancels with: Start, set process, or remote on-off
799	Alert	Remote-switch mismatch	All models	This code occurs when the inputs from the standard remote on-off switch and the redundant remote on-off switch are different. If you cannot find or correct the problem, speak to your cutting machine supplier or regional Hypertherm Technical Service team. ▪ XPR action: None ▪ Code cancels with: Start, set process, or remote on-off

Refer to Sequence of operation on page 223 for descriptions of cutting system operations.

General troubleshooting procedures

Causes of decreased consumable life

These are some causes of decreased consumable life that can occur frequently.

Cuts are started or stopped off the surface of the workpiece.

To extend consumable life, **start and stop all cuts on the surface of the workpiece**.

The cut settings are not correct.

One or more of the following settings is not correct:

- Arc current
- Arc voltage
- Travel speed
- Motion delay
- Gas flow rates
- Initial torch height

Use the correct settings for the type and thickness of the metal that you are cutting. Refer to the cut charts in the *XPR Cut Charts Instruction Manual (809830)*.

The cutting material is magnetic.

When possible, do not cut metal that is magnetic or that can easily become magnetic. For example, do not cut armor plate that has a high nickel content.

Cutting faults that can occur frequently

Hypertherm recommends these steps when you have one of these cutting problems.

The pilot arc starts but does not transfer to the workpiece.

- Make sure that the work cable is correctly connected to the cutting table and is fully tightened.
- Lower the torch so that it is closer to the workpiece.
- Make sure that the system is not in a fault condition.

  Refer to Diagnostic codes on page 291.

The plasma arc does not cut completely through the workpiece, and there is too much sparking on top of the workpiece.

- Increase the arc current.

  Refer to the *XPR Cut Charts Instruction Manual (809830)*.
- Decrease the cut speed.

  Refer to the *XPR Cut Charts Instruction Manual (809830)*.
- Replace consumables that are worn or have damage.

- Cut thinner material.

There is dross on the bottom of the cut.

- Adjust the cutting speed to align with the type and thickness of the metal being cut.

  Refer to the *XPR Cut Charts Instruction Manual (809830)*.

- Increase the arc current.

  Refer to the *XPR Cut Charts Instruction Manual (809830)*.

- Replace consumables that are worn or have damage.

The angle of the cut is not square.

- Make sure that the direction of the torch travel is correct.

  The high-quality side of the cut is on the right with regard to the forward motion of the torch.

- Make sure that the following settings are correct:

  - Torch height
  - Cut speed
  - Arc current

  For the recommended settings for the type and thickness of the metal that you are cutting, refer to the *XPR Cut Charts Instruction Manual (809830)*.

- Make sure that the torch head is perpendicular to the workpiece.

- Replace consumables that are worn or have damage.

Do a gas leak test

Do an automated gas leak test on the CNC screen or XPR web interface if you suspect a cutting system gas leak.

⚠ WARNING





HYDROGEN GAS CAN CAUSE AN EXPLOSION OR FIRE

Hydrogen is a flammable gas that can cause an explosion or fire if it is not removed.

Keep flames away from cylinders and hoses that contain hydrogen. Keep flames and sparks away from the torch when using hydrogen as a plasma gas.

Consult your local safety, fire, and building code requirements for the storage and use of hydrogen.

Hypertherm recommends that you install an exhaust ventilation system to remove the hydrogen-enriched atmosphere that can collect when hydrogen is used as the plasma gas for cutting.

Flashback arrestors are REQUIRED to stop the spread of fire to the supply gases (unless a flashback arrestor is not available for a specific gas or pressure).

As an installer or user, you must supply the exhaust ventilation and flashback arrestors for your cutting system. You can get them from your cutting machine supplier.

⚠ WARNING





OXYGEN GAS CAN CAUSE A FIRE HAZARD

If you use oxygen as the plasma gas for cutting, it can cause a potential fire hazard due to the oxygen-enriched atmosphere that collects. A fire can occur if oxygen is not removed.

Hypertherm recommends that you install an exhaust ventilation system to remove the oxygen-enriched atmosphere that can collect when oxygen is used as the plasma gas for cutting.

Flashback arrestors are REQUIRED to stop the spread of fire to the supply gases (unless a flashback arrestor is not available for a specific gas or pressure).

As an installer or user, you must supply the exhaust ventilation and flashback arrestors for your cutting system. You can get them from your cutting machine supplier.

With version U (or later) of the XPR firmware, you can do a gas leak test with all gas connect consoles, including Core and CorePlus. With a firmware version before revision U, you can do gas leak tests only with VWI and OptiMix consoles.

1. Use the CNC screen or XPR web interface to select the command to do an automated gas leak test.

   The error log shows the test results.

   The instruction manual that came with your CNC has information to help you do this step.

2. Refer to the error log for information about how to find or troubleshoot a possible gas leak.

Example

Gas leak tests in the XPR web interface

When you select **GAS LEAK TEST** in the XPR web interface:

1 The **GAS LEAK TEST** button is highlighted with red to show that it is active, and the test has started.

2 The active valves are identified with colored highlights.

3 The gases shown on Line A, Line B, and shield are different for different process IDs. You can do a gas leak test for Line A (black) and for Line B (yellow) but not for the shield gas line (blue).

4 The gases flow until you select the same button or select a different button that interrupts the test.

Figure 71 - GAS LEAK TEST in the XPR web interface

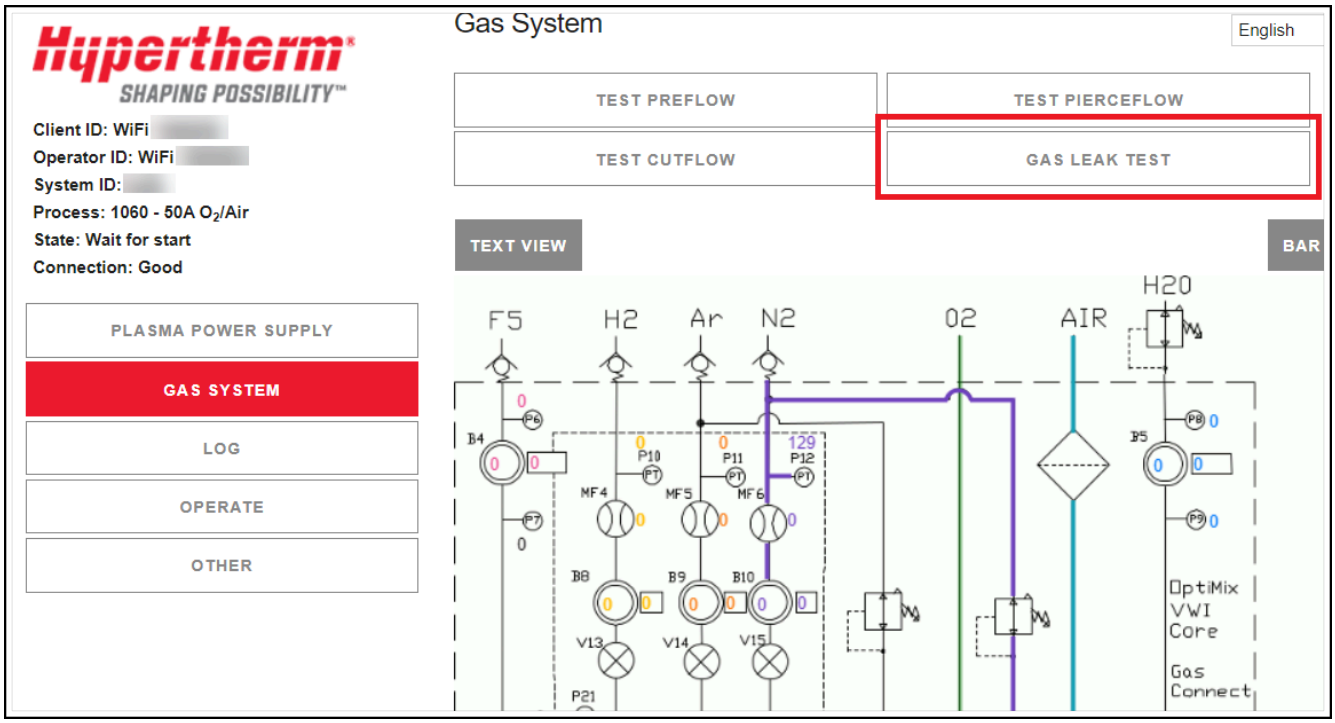

What to do next:

- After you complete a gas leak test in the XPR web interface, select the **LOG** button to see the result of the test.
- The **Log** screen shows if the test was successful.
- For a test that was not successful, look for information on the **Log** screen that identifies the point of failure.
- Use the information from the **Log** screen and the wiring diagrams for your system to find the location of the gas leak.

Coolant flow measurements

There are two methods to measure coolant flow. You can use the CNC or XPR web interface, or you can do a container test.

It is necessary for electric power to be supplied to the cutting system to measure coolant flow. **Use extreme caution if you do diagnosis or maintenance tasks when the system components are connected to electric power.**

⚠ WARNING

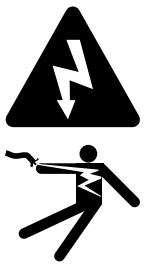

ELECTRIC SHOCK CAN KILL

The plasma power supply contains dangerous electric voltages that can seriously injure or kill you. Even if the plasma power supply is turned OFF, you can still get a serious electric shock if the plasma power supply remains connected to an electric power source.

Use extreme caution if you do diagnosis or maintenance tasks when the plasma power supply remains connected to an electric power source and the outer cover or panels are removed. All work that requires removal of the plasma power supply outer cover or panels must be done by a qualified technician. Refer to the *Safety and Compliance Manual (80669C)* for more safety information.

Use the CNC or XPR web interface to measure coolant flow

If the coolant flow rate is outside of the correct range, an internal obstruction or leak can be the cause.

1. Look at the CNC or XPR web interface to identify the coolant flow rate.
2. Make sure that the coolant flow rate is more than the minimum flow rate limit for your cutting system.

Minimum flow rate limits		Frequency (Hz)
Liters per minute (L/min)	U.S. gallons per minute (gal/min)	
1.89 L/min	0.5 gal/min	15 Hz
3.78 L/min	1.0 gal/min	34 Hz
5.67 L/min	1.5 gal/min	54 Hz

Do a container test to measure coolant flow

The container test helps to find problems with coolant flow.

1. Get an empty container that has a minimum capacity of 3.79 liters (1 U.S. gallon) and includes volume measurements, if possible.
2. Remove the power from the cutting system on page 253.
3. Remove the coolant-return hose (red band) from the coolant-return fitting (red) on the rear of the plasma power supply.

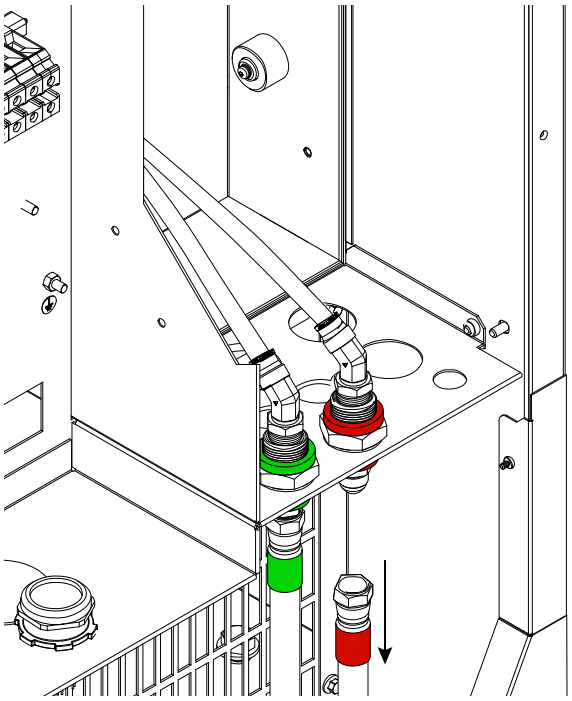

4. Use the container to collect coolant leaks if necessary.
5. Remove the coolant from the container before you start the test.
6. Put the end of the coolant-return hose in the container.
7. Supply power to the cutting system.
8. Send a process to the cutting system.

9. When you hear the coolant pump start, let the coolant flow in the container for 30 seconds.
10. After 30 seconds, look at the quantity of coolant in the container.

    Make sure that the container has a minimum of 1.89 liters (0.5 U.S. gallon) of coolant.
11. If the flow rate is outside of the correct range, an internal obstruction or leak can be the cause.

    Problems with the torch or consumable parts can be a source of flow restrictions. Make sure the consumable parts are in good condition and that you are using the correct consumable parts for the process.
12. If you find obstructions, remove them.
13. If you find parts that have damage, replace them.
14. If coolant flow stays slow, and it has been more than six months since the last coolant replacement, replace the coolant.

    Refer to Coolant replacement and its significance on page 277.

    Hypertherm recommends coolant replacement every six months. Replace the coolant if you find copper pieces or if the coolant is clear and not the original pink color.
15. If coolant flow stays slow after replacement, make sure that the bypass-operation is correct and that these components are in good condition:

    - Consumable parts and torch
    - Console-to-console leads
    - Coolant check valve
    - Coolant bypass valve
    - Valve seals
    - Coolant solenoid
    - Coolant-pump motor
16. If you cannot find or correct the problem, speak to your cutting machine supplier or regional Hypertherm Technical Service team.

Do a test for continuity between the nozzle and workpiece

This test helps to find faulty connections or damage in the pilot-arc circuit. This test will do a check of the pilot-arc cable in the torch lead but not of the conductivity of the nozzle.

Corrective action

1. Remove the power from the cutting system.

2. Locate the start-circuit assembly (PCB 4 in the plasma power supply).

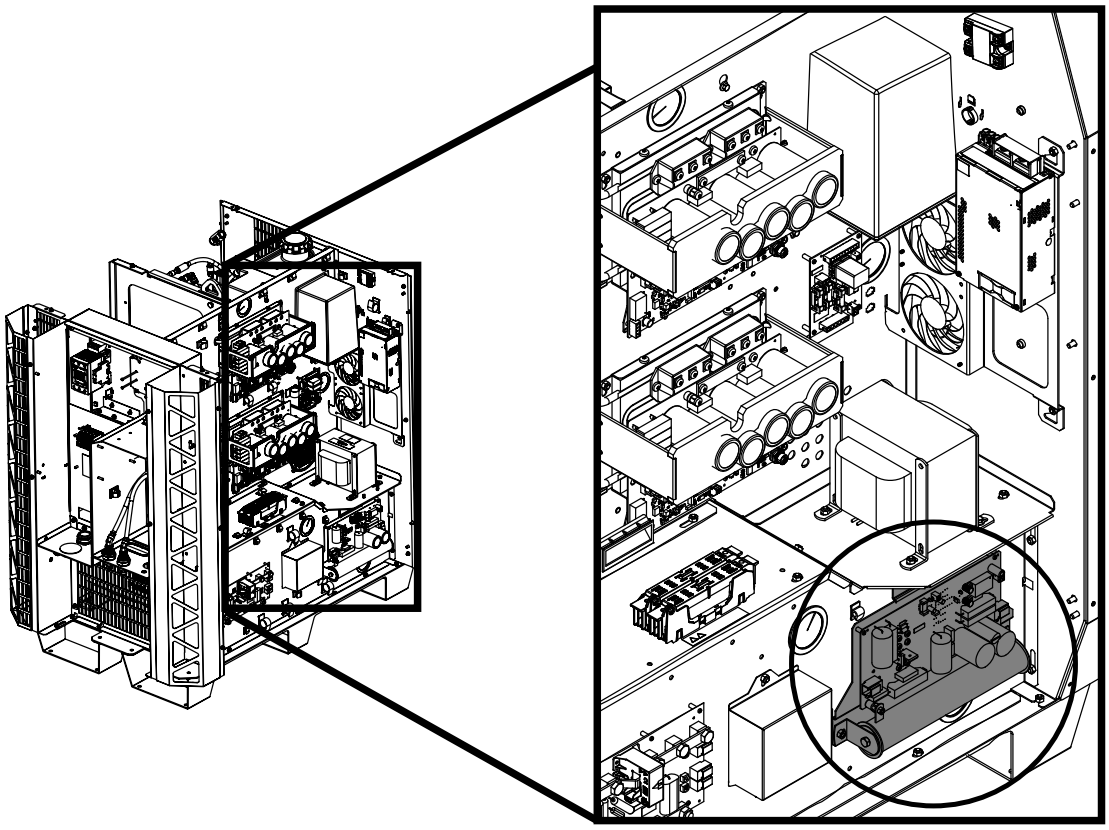

3. Install a temporary jumper wire between J5 (nozzle) and J1 (work) on the start circuit PCB (PCB 4 in the plasma power supply).

   If you do not have a jumper wire, you can put plugs in the J7 and J8 connectors instead.

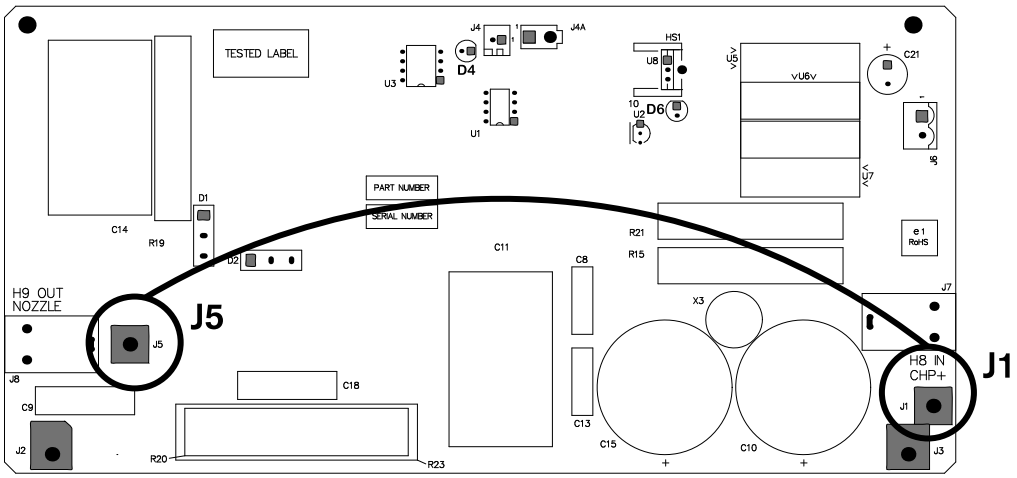

4. Find the pilot-arc relay (CR 1), and remove the dust cover.

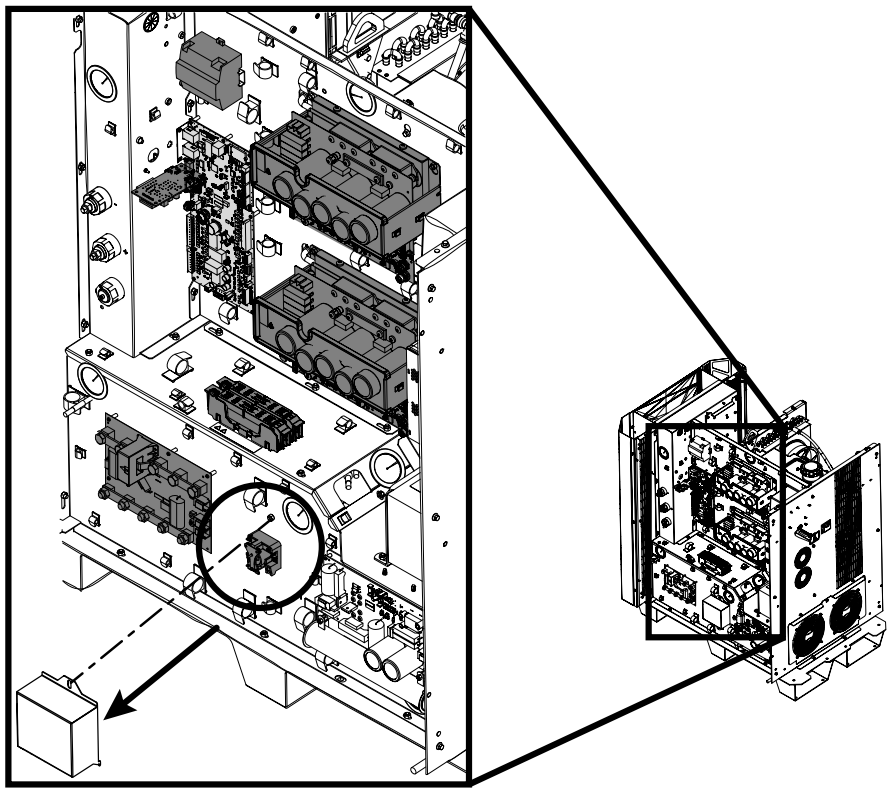

5. Have a second person close (push in) the contact on the pilot arc relay.

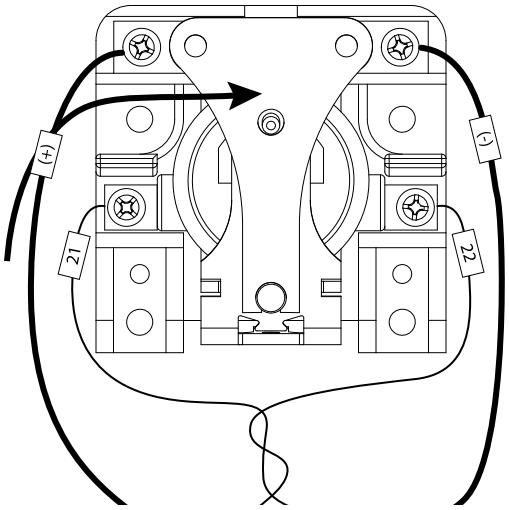

6. Measure the ohms (Ω) between the nozzle and the workpiece.

   Less than 3 ohms (Ω) is good. A value more than 3 ohms (Ω) identifies a faulty connection between one of the following:

   - The torch and the ignition console
   - The ignition console and the plasma power supply

- ☐ The plasma power supply work cable and the workpiece

7. Examine the work cable, and replace the cable if you find damage or excess wear.
8. Examine the pilot-arc circuit between these connection points:
   - ☐ From the plasma power supply to the gas connect console
   - ☐ From the gas connect console to the TorchConnect console
   - ☐ From the TorchConnect console to the torch receptacle
9. Does the pilot-arc circuit have damage?

If yes...	Replace the pilot-arc cables that have damage.
If no...	Replace the torch and torch receptacle.

10. Release the pilot-arc relay, and measure the ohms (Ω) between the nozzle and workpiece.

    The acceptable range is 9,000 ohms (Ω) – 11,000 ohms (Ω). If the ohms (Ω) value is low – approximately 5,000 ohms (Ω) or less – examine the pilot-arc circuit between these connection points. Look for insulation damage and short circuits to ground:
    - ☐ From the plasma power supply to the gas connect console
    - ☐ From the gas connect console to the TorchConnect console
    - ☐ From the TorchConnect console to the torch receptacle

Measure resistance from thermistors

Use this procedure to measure the resistance of each thermistor wire.

1. Use a digital multimeter to measure the resistance from each thermistor wire, using these connector-pin locations:

Thermistor location	Location of thermistor wires/connector	1st connector pin	2nd connector pin
Inductor 1A	PCB 1 (plasma power supply)	J1.4 pin 3	J1.4 pin 4
Inductor 1B	PCB 1 (plasma power supply)	J1.4 pin 5	J1.4 pin 6
Inductor 2A [1]	PCB 1 (plasma power supply)	J1.4 pin 7	J1.4 pin 8
Inductor 2B [1]	PCB 1 (plasma power supply)	J1.2 pin 1	J1.2 pin 2
Inductor 3A [2]	PCB 1 (plasma power supply)	J1.2 pin 3	J1.2 pin 4
Inductor 3B [2]	PCB 1 (plasma power supply)	J1.2 pin 5	J1.2 pin 6

Thermistor location	Location of thermistor wires/connector	1st connector pin	2nd connector pin
Transformer 1	PCB 1 (plasma power supply)	J1.4 pin 1	J1.4 pin 2
Transformer 2 [2]	PCB 1 (plasma power supply)	J1.25 pin 1	J1.25 pin 2
Control transformer [2]	PCB 1 (plasma power supply)	J1.25 pin 3	J1.25 pin 4
Chopper 1	PCB 2 (plasma power supply)	J2.2 pin 1	J2.2 pin 3
Chopper 2 [1]	PCB 3 (plasma power supply)	J3.2 pin 1	J3.2 pin 3
Chopper 3 [2]	PCB 8 (plasma power supply)	J4.2 pin 1	J4.2 pin 3
Coolant temperature [3]	PCB 1 (plasma power supply)	J1.2 pin 7	J1.2 pin 8
Coolant temperature [2]	PCB 2 (cooler)	J2.4 pin 1	J2.4 pin 2

1 XPR300 and XPR460 only

2 XPR460 only

3 XPR170 and XPR300 only

2. Look for a resistance value that is outside of the minimum or maximum value in Ohmic resistance values for thermistors on page 343.

   At approximately 25°C (77°F), look for a resistance of approximately 10,000 ohms (Ω).

If you get this condition...	Do these steps...
The resistance is more than the maximum value.	Speak to your cutting machine supplier or regional Hypertherm Technical Service team. They can help you to identify if there is a wiring fault or if thermistor replacement is necessary.
The resistance is at or near 0 ohms (Ω).	1. Examine the wiring between each thermistor and its connector pins. 2. Look for shorts between wires or to the ground.
The resistance is in the permitted range.	Continue cutting system operation.
The resistance stays at less than the minimum ohmic value or does not change after the coolant gets to: ▪ ≤ 85°C (185°F) for XPR170 and XPR300 ▪ ≤ 75°C (167°F) for XPR460	Speak to your cutting machine supplier or regional Hypertherm Technical Service team.
The thermistor resistance is in the permitted range when the thermistor is disconnected from the control PCB, and the code continues when the thermistor is reconnected to the control PCB.	Speak to your cutting machine supplier or regional Hypertherm Technical Service team. They can help you make a decision on if control PCB replacement is necessary. Refer to Plasma power supply control PCB (141545) diagram on page 392.

3. If you cannot find or correct the problem, speak to your cutting machine supplier or regional Hypertherm Technical Service team.

Do an ohmic-contact test

Use this test to examine the resistance from the torch tip to the ohmic relay in the plasma cutting system. This test helps to find ohmic contact issues.

1. Remove the power from the cutting system.
2. Remove the top panel and the side panels from the TorchConnect console.
3. Examine the J2 connector on the ohmic contact PCB.

   Make sure that the ohmic-relay coil is connected. Reconnect or tighten the ohmic-relay coil if necessary.
4. Disconnect the ohmic-relay connector to get access to the bullet connector on the torch receptacle block-side inside of the TorchConnect console.

   To disconnect the ohmic-relay connector, unscrew and unplug it.

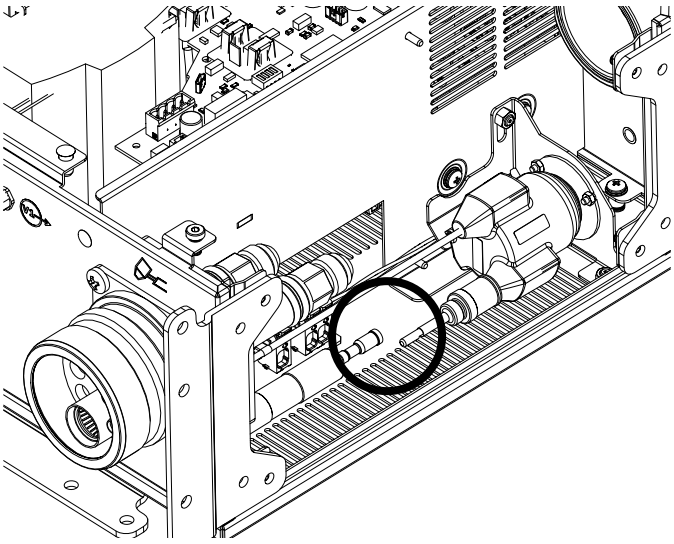

5. Use a digital multimeter to measure the resistance from the torch tip to the ohmic relay.

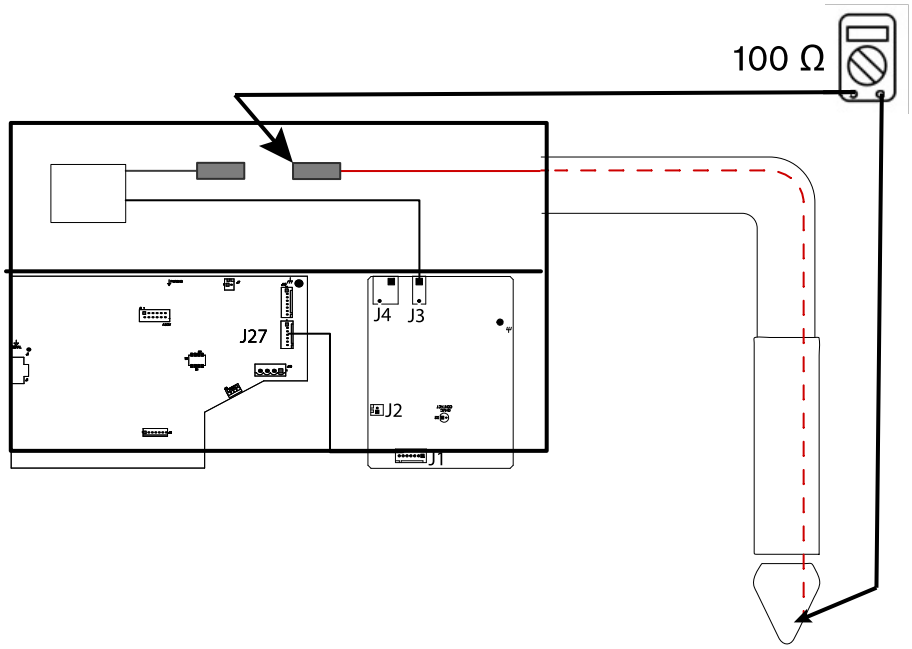

a. If the resistance is infinite (open), replace the torch lead.

b. If the resistance is less than 100 ohms (Ω), continue with the next step.

6. Reconnect the ohmic-relay connector.
7. Examine the ohmic contact PCB.

   Refer to Torch connect console ohmic PCB (141368) diagram on page 400.

   a. If the PCB configuration is for internal ohmic, make sure that the ohmic wire from the ohmic relay is connected to J3.

   b. If the PCB configuration is for external ohmic, make sure that the ohmic wire from the ohmic relay is connected to J4 pin 2 and that the ohmic wire from the lifter is connected to J4 pin 1.

   c. Adjust or tighten connections, if necessary, and continue with the next step.

8. Supply power to the cutting system.
9. Make sure that the torch does **not** touch the workpiece.
10. Use a digital multimeter to look for 24 VDC between the workpiece, or chassis ground, and the torch tip (J3 or J4).
11. If there is no 24 VDC, examine the wiring to the ohmic PCB.

    a. Make sure that the J3 or J4 connector is not clamped onto the wire insulation.

    b. Make sure that the connection between the J2 or J2A connector and the relay coil is good.

    c. Replace the relay if necessary.

12. If you find 24 VDC, continue with these steps:

    a. Make sure that both the workpiece and the TorchConnect console are grounded in the same location.

    b. Touch the torch tip to the workpiece, or attach a jumper wire between the torch tip and the chassis ground.

    c. Examine the D2 LED on the ohmic contact PCB.

       Refer to Torch connect console ohmic PCB (141368) diagram on page 400.

    d. Examine the D15 LED on the control PCB.

       Refer to Torch connect console control PCB (141334) diagram on page 401.

    e. Make sure that D2 and D15 both illuminate.

    f. If D2 and D15 both illuminate, make sure that the CNC can receive ohmic contact signals from the cutting system or Torch Height Control (THC).

       If the CNC can receive ohmic contact signals, refer to the instruction manual for your CNC for troubleshooting recommendations.

    g. If D2 is not illuminated, replace the ohmic contact PCB.

    h. If D2 (on the ohmic contact PCB) is illuminated and D15 (on the control PCB) is not illuminated, examine the PCB wiring harnesses for loose wiring.

13. If you cannot find or correct the problem, speak to your cutting machine supplier or regional Hypertherm Technical Service team.

Troubleshooting procedures for diagnostic codes

CAN communication troubleshooting for gas connect consoles

Diagnostic codes 500, 507, 508, 510, 602

Do these steps if you get a diagnostic code that is related to CAN communication issues with a Core, CorePlus, VWI, or OptiMix gas connect console.

Multiple CAN diagnostic codes at the same time can identify a problem with the CAN cable. If there is only one code, the problem is more likely to be caused by what the code says and not by the CAN cable.

Symptoms

Code	Symptoms	XPR models	XPR action	Code cancels with...
500	The main control PCB cannot receive communications (at least once-per-second) from the gas connect console (Core, CorePlus, VWI, or OptiMix) through the CAN.	All models	Shut down	Remote on-off
507	There is a problem with the CAN when power is supplied to the cutting system.	All models	None	Remote on-off
508	The load on the CAN bus is more than capacity for 10 milliseconds or more.	All models	None	Remote on-off
510	The gas connect console (Core, CorePlus, VWI, or OptiMix) cannot receive communications (at least once-per-second) from the main control PCB through the CAN.	All models	None	Remote on-off
602	For a minimum of 30 seconds after power is supplied to the cutting system, the gas connect console (Core, CorePlus, VWI, or, OptiMix) does not identify itself to the main control PCB.	All models	Shut down	Remote on-off

Corrective action

1. Remove the power from the cutting system.
2. Tighten loose CAN cable connections between the plasma power supply and the gas connect console.
3. Tighten loose connections on the control PCB chassis in the gas connect console.
4. Make sure that the D16 (+5 VDC) LED and the D18 (+3.3 VDC) LED are illuminated on the control PCB.

   D16 and D18 show that there is power to the PCB. Refer to Gas connect console control PCB (141375) diagram on page 398.
5. Make sure that the D30 LED and the D31 LED on the control PCB are flashing one time per second.

   A flashing LED shows that the mircoprocessor on the PCB is functional.
6. If the D24 LED and the D25 LED on the control PCB are flickering and you have diagnostic codes 600 and 602, do the following:

   a. Make sure that the CAN cable between the plasma power supply and the gas connect console is connected.

b. Disconnect the CAN cable between the gas connect console and the TorchConnect console.

If you see this condition...	Do these steps...
D24 and D25 stop flickering when you disconnect the CAN cable.	1. There is a bad connection between the plasma power supply and the gas connect console. Reconnect the CAN cable, or replace it if necessary. 2. There is a bad connection between the small CAN jumper cable for the gas connect console control PCB and the sheet metal panel in the gas connect console. Reconnect the CAN cable, or replace it if necessary.
The control PCB in the gas connect console is operating correctly but you continue to see the same diagnostic code.	There is a problem with one of the following cables. Continue with the next step. ▪ The CAN cable between the gas connect console and the TorchConnect console ▪ The small CAN jumper cable between the control PCB and the sheet metal panel in the gas connect console

7. Disconnect these cables and examine them for sockets and pins that are bent:

   a. If you find bent pins, make the bent pins straight.

   b. If you find bent sockets or broken pins, get a new cable.

8. Examine D24 and D25 on the control PCB again:

If you see this condition...	Do these steps...
D24 and D25 are not illuminated and are not flickering.	Reconnect the CAN cable to the plasma power supply.
D24 is not illuminated, and D25 is flickering.	1. Examine the control PCB in the gas connect console for shorts. 2. Look for a shorting block across pin 1 and pin 2 of J16. 3. If there is a shorting block, remove it and start the cutting system again. 4. If J16 is open, replace the control PCB.

9. If you cannot find or correct the problem, speak to your cutting machine supplier or regional Hypertherm Technical Service team.

CAN communication troubleshooting for mixing modules in OptiMix consoles

Diagnostic codes 501, 507, 508, 511

Do these steps if you get a diagnostic code that is related to CAN communication issues with the mixing module in an OptiMix gas connect console.

Multiple CAN diagnostic codes at the same time can identify a problem with the CAN cable. If there is only one code, the problem is more likely to be caused by what the code says and not by the CAN cable.

Symptoms

Code	Symptoms	XPR models	XPR action	Code cancels with...
501	The main control PCB cannot receive communications (at least once-per-second) from the OptiMix gas connect console through the CAN.	All models	Shut down	Remote on-off
507	There is a problem with the CAN when power is supplied to the cutting system.	All models	None	Remote on-off
508	The load on the CAN bus is more than capacity for 10 milliseconds or more.	All models	None	Remote on-off
511	The OptiMix gas connect console cannot receive communications (at least once-per-second) from the main control PCB through the CAN.	All models	None	Remote on-off

Corrective action

1. Remove the power from the cutting system.
2. Tighten loose CAN cable connections between the plasma power supply and the gas connect console.
3. Tighten loose connections on the control PCB chassis in the gas connect console.
4. Make sure that the D16 (+5 VDC) LED and the D18 (+3.3 VDC) LED are illuminated on the control PCB.

   D16 and D18 show that there is power to the PCB. Refer to Gas connect console control PCB (141375) diagram on page 398.
5. Make sure that the D30 LED and the D31 LED on the control PCB are flashing one time per second.

   A flashing LED shows that the mircoprocessor on the PCB is functional.

6. If the D24 LED and the D25 LED on the control PCB are flickering and you have diagnostic codes 600 and 602, do the following:

    a. Make sure that the CAN cable between the plasma power supply and the gas connect console is connected.

    b. Disconnect the CAN cable between the control PCB and the mixer in the OptiMix console.

    c. With the cable disconnected, do D24 and D25 stop flickering?

If yes...	▪ There is damage to the CAN cable. Use an ohm meter to make sure that there is continuity at each connector. Measure each pin in the same order as the CAN connectors. For example, in the image, pin 1 in connector A aligns with pin 1 in connector B. If there is no continuity, replace the cable.  ▪ There is a bad connection between the plasma power supply and the gas connect console. Reconnect the CAN cable, or replace it if necessary. ▪ There is a bad connection between the small CAN jumper cable for the gas connect console control PCB and the sheet metal panel in the gas connect console. Reconnect the CAN cable, or replace it if necessary.
If no...	Continue with the next step.

7. If the control PCB in the gas connect console is operating correctly but you continue to see the same diagnostic code, do the following:

    a. Replace the CAN cable between the control PCB and the mixer.

    b. Disconnect the CAN cable between the gas connect console and the TorchConnect console.

    c. With the cable disconnected, do a check for the following:

        - Make sure that each green LED on the mixer is operating correctly.
        - Make sure that the XPR web interface or the CNC screen shows that the cutting system is equipped with an OptiMix gas connect console.

8. Examine D24 and D25 on the control PCB again:

If you see this condition...	Do these steps...
D24 and D25 are not illuminated and are not flickering.	Reconnect the CAN cable to the plasma power supply.

If you see this condition...	Do these steps...
D24 is not illuminated, and D25 is flickering.	1. Examine the control PCB in the gas connect console for shorts. 2. Look for a shorting block across pin 1 and pin 2 of J16. 3. If there is a shorting block, remove it and start the cutting system again.

9. Examine the green LED on the mixer PCB in the OptiMix console:

If you see this condition...	Do these steps...
The green LED is flashing one time per second, and the yellow LED is flickering.	No action is necessary. This is the correct operation. The cutting system is ready for use.
The green LED is flashing one time per second, and the yellow LED is not illuminated.	1. Examine the CAN cable between the control PCB and the mixer. 2. Look for pins that are bent or broken. 3. Make sure that all connections are fully tightened.
The green LED is blinking one time per second, and the red LED is illuminated and not flickering.	There is a possible problem with the mixer in the OptiMix console. Speak to your cutting machine supplier or regional Hypertherm Technical Service team.

   On the mixer PCB, look for a green LED, a yellow LED, and a red LED that are aligned in a row.

10. If you cannot find or correct the problem, speak to your cutting machine supplier or regional Hypertherm Technical Service team.

CAN communication troubleshooting for TorchConnect consoles

Diagnostic codes 503, 507, 508, 513, 600

Do these steps if you get a diagnostic code that is related to CAN communication issues with a TorchConnect console.

Multiple CAN diagnostic codes at the same time can identify a problem with the CAN cable. If there is only one code, the problem is more likely to be caused by what the code says and not by the CAN cable.

Symptoms

Code	Symptoms	XPR models	XPR action	Code cancels with...
503	The main control PCB cannot receive communications (at least once-per-second) from the TorchConnect console through the CAN.	All models	Shut down	Remote on-off
507	There is a problem with the CAN when power is supplied to the cutting system.	All models	None	Remote on-off
508	The load on the CAN bus is more than capacity for 10 milliseconds or more.	All models	None	Remote on-off
513	The TorchConnect console cannot receive communications (at least once-per-second) from the main control PCB through the CAN.	All models	None	Remote on-off
600	For a minimum of 30 seconds after power is supplied to the cutting system, the TorchConnect console does not identify itself to the main control PCB through the CAN.	All models	Shut down	Remote on-off

Corrective action

1. Remove the power from the cutting system.
2. Make sure that all connections between the TorchConnect console and the gas connect console are fully tightened.
3. Make sure that the D43 (+5 VDC) LED and the D46 (+3.3 VDC) LED are illuminated on the control PCB (141334) in the TorchConnect console.
4. Examine D43 (+5 VDC) and D46 (+3.3 VDC) on the control PCB:

If you see this condition...	Do these steps...
D43 and D46 are not illuminated.	1. Measure the power output for PS1 with a digital volt meter. 2. If there is no 24 VDC output, examine the 120 VAC input to PS1. 3. If there is no 120 VAC, make sure that the power cable connection is fully tightened between the TorchConnect console and the 120 VAC-out connection from the gas connect console.
D43 and D46 are illuminated.	1. Make sure that the 120 VAC-out cable from the gas connect console is fully tightened. 2. Make sure that the Activity LED (D88) and the Status LED (D87) are flashing one time per second. 3. If D88 and D87 are not flashing one time per second, replace the control PCB.

A flashing or flickering LED shows that the microprocessor on the control PCB is functional. If D43 and D46 are good, continue with the next step.

5. Examine the CAN TX LED (D35) and the RX LED (D34):

If you see this condition...	Do these steps...
D34 is not flickering.	Reconnect the CAN cable between the TorchConnect console and the gas connect console. Fully tighten the connections.
D34 is flickering, but D35 is not flickering.	Replace the control PCB in the TorchConnect console.

6. If you cannot find or correct the problem, speak to your cutting machine supplier or regional Hypertherm Technical Service team.

CAN communication troubleshooting for choppers

Diagnostic codes 504 – 508, 514 – 516, 601, 604, 606

Do these steps if you get a diagnostic code that is related to CAN communication issues with a chopper.

Multiple CAN diagnostic codes at the same time can identify a problem with the CAN cable. If there is only one code, the problem is more likely to be caused by what the code says and not by the CAN cable.

Symptoms

Code	Symptoms	XPR models	XPR action	Code cancels with...
504	The main control PCB cannot receive communications (at least once-per-second) from Chopper 1 through the CAN.	All models	Shut down	Remote on-off
505	The main control PCB cannot receive communications (at least once-per-second) from Chopper 2 through the CAN.	XPR300, XPR460	Shut down	Remote on-off
506	The main control PCB cannot receive communications (at least once-per-second) from Chopper 3 through the CAN.	XPR460	Shut down	Remote on-off
507	There is a problem with the CAN when power is supplied to the cutting system.	All models	None	Remote on-off
508	The load on the CAN bus is more than capacity for 10 milliseconds or more.	All models	None	Remote on-off

Code	Symptoms	XPR models	XPR action	Code cancels with...
514	Chopper 1 cannot receive communications (at least once-per-second) from the main control PCB through the CAN.	All models	None	Remote on-off
515	Chopper 2 cannot receive communications (at least once-per-second) from the main control PCB through the CAN.	XPR300, XPR460	None	Remote on-off
516	Chopper 3 cannot receive communications (at least once-per-second) from the main control PCB through the CAN.	XPR460	None	Remote on-off
601	For a minimum of 30 seconds after power is supplied to the cutting system, Chopper 1 does not identify itself to the main control PCB through the CAN.	All models	Shut down	Remote on-off
604	For a minimum of 30 seconds after power is supplied to the cutting system, Chopper 2 does not identify itself to the main control PCB through the CAN.	XPR300, XPR460	None	▪ Start ▪ Set process ▪ Remote on-off
606	For a minimum of 30 seconds after power is supplied to the cutting system, Chopper 3 does not identify itself to the main control PCB through the CAN.	XPR460	None	▪ Start ▪ Set process ▪ Remote on-off

Corrective action

1. Remove the power from the cutting system.
2. Make sure that the chopper ID cable connector is fully engaged in J8 on each chopper in the plasma power supply.
3. Make sure that the green LED is illuminated on Chopper 1/PCB 2 for the following:
   - □ D22 (+18/-5 VDC)
   - □ D14 (+5 VDC)
   - □ D21 (+3.3 VDC)

   Each illuminated LED shows that there is power to the chopper control PCB (PCB 2).
4. If at least one LED is not illuminated, do the following:

If you see this condition...	Do these steps...
No LED is illuminated.	1. Make sure that the J2 power connector is fully engaged. 2. Make sure that the wiring to the J2 connector is good. 3. Do a check for 24 VDC on J2 pin 1 and pin 3 for each chopper in the system. 4. If you cannot find or correct the problem, speak to your cutting machine supplier or regional Hypertherm Technical Service team.
Each LED is illuminated except for one or two.	Replace the chopper control PCB if necessary.

5. If each green LED is illuminated, examine each chopper control PCB:
    a. Make sure that the D3 LED and D4 LED are flashing one time per second.

       A flashing LED shows that the microprocessor on the PCB is functional.

    b. Make sure that Dual Inline Package (DIP) switches 1 – 4 on S2 are in the OFF position.

    c. Make sure that the CAN cable connector is fully engaged in J7.
6. Make sure that the D33 LED and D34 LED are flickering.

   A flickering LED shows that communications on the CAN cable is functional.
7. Examine the CAN cable connection between Chopper 1 and the control PCB (PCB 1) in the plasma power supply:
    a. Make sure that the cable connections are fully tightened.

    b. If you find bent pins, make the bent pins straight.

    c. If you find bent sockets or broken pins, get a new CAN cable.
8. If you cannot find or correct the problem, speak to your cutting machine supplier or regional Hypertherm Technical Service team.

Troubleshooting for an ignition timeout

Diagnostic code 520

A 520 diagnostic code is an alert that shows after an ignition timeout when there is no pilot arc.

Symptoms

Code	Symptoms	XPR models	XPR action	Code cancels with...
520	The sensor in Chopper 1 does not measure current during the 600 millisecond ignite period because no current path completes between the nozzle and the electrode.	All models	End of cycle	▪ Start ▪ Set process ▪ Remote on-off

Corrective action

1. Make sure that the transfer height is correct and that the torch is not in contact with the workpiece.
2. Examine the consumables, and replace any that have damage or excess wear.
3. Make sure that the spark gap PCB is correctly connected to the ignition PCB.

   Refer to Gas connect console high-voltage side parts (CorePlus shown) on page 415.

   a. Make sure that the spark gaps illuminate brightly.

   b. If they do not, replace only the spark gap PCB.
4. Examine the main contactor:

   a. Look for black or rough surfaces that are difficult to remove.

   b. Make sure that the contactor closes immediately after the Start command is applied.
5. If the contactor is defective, replace it.
6. Examine the pilot-arc relay to make sure that it closes.
7. Examine the wiring to make sure that the coil receives 24 VDC.
8. Examine the start circuit PCB, and replace it if it is defective.
9. Do a torch lead test: Do a test for continuity between the nozzle and workpiece on page 312.

Troubleshooting for a pilot arc timeout

Diagnostic code 521

Diagnostic code 521 identifies a problem with ignition of the plasma arc.

Symptoms

Code	Symptoms	XPR models	XPR action	Code cancels with...
521	▪ No current is found on the work cable for 500 milliseconds after the pilot arc current is established. ▪ For a minimum of 3 milliseconds, the sensor in the work cable cannot measure current greater than the transfer reference value.	All models	End of cycle	▪ Start ▪ Set process ▪ Remote on-off

Corrective action

1. Make sure that the work lead is connected to the workpiece.
2. Make sure that the transfer height is correct.
3. Examine the consumables.
4. Replace consumables that have damage or excess wear.

Verification

Do a torch lead test. Refer to Do a test for continuity between the nozzle and workpiece on page 312.

Troubleshooting for gas flow process timeouts

Diagnostic codes 522 – 525

Diagnostic codes 522 – 525 identify a problem with the preflow, cutflow, or gas purge processes.

Symptoms

Code	Symptoms	XPR models	XPR action	Code cancels with...
522	The cutting system cannot complete the preflow routine in 30 seconds.	All models	End of cycle	▪ Start ▪ Set process ▪ Remote on-off
523	The preflow purge cannnot get to the setpoint in 45 seconds.	All models	None	▪ Set process ▪ Remote on-off
524	The cutflow purge cannnot get to the setpoint in 45 seconds.			
525	The plasma cutting system cannot complete the N_2 purge in 45 seconds. The process did not get selected.			

Corrective action

1. Look at the diagnostic code history for gas-related codes.

   The code history can help to identify where to look for flow or pressure problems.

2. Examine the consumables, valves, and inlet hoses to make sure that they are correct.
3. Replace any consumables, valves, or inlet hoses that have damage or excess wear.

Troubleshooting for low outlet gas pressure

Diagnostic codes 530, 531, 533

Diagnostic codes 530, 531, and 533 identify low pressure at the outlet.

Symptoms

Code	Symptoms	XPR models	XPR action	Code cancels with...
530	▪ The line A pressure (P5) is less than 75% of the setpoint for 200 milliseconds for any process. ▪ P5 is less than 75% of the P21 sensor reading for 4 seconds for a mixed-fuel gas process. ▪ P5 is less than 75% of the P7 setpoint for 4 seconds for an F5 process.	All models	Ramp down	▪ Set process ▪ Remote on-off
531	For a minimum of 200 milliseconds, the line B pressure is less than 75% of setpoint.			
533	For a minimum of 200 milliseconds, the F5 pressure sensor (P7) is less than 75% of setpoint.			

Corrective action

1. Look at the diagnostic code history for pressure-related codes.

   The code history can help to identify where to look for flow or pressure problems.

2. Make sure that the gas pressure for line A (P2) or line B (P1) is in the correct range.
3. If the measurement is too high or too low, use the regulators to adjust the pressure for the line A, line B, or F5 gas to the correct range.
4. Examine the consumables:
   a. Make sure that the correct consumables are installed.
   b. Make sure that there is no damage or excess wear.
5. Replace the incorrect consumables or the consumables that have damage or excess wear.

Verification

Use the gas volume monitors that are near the pressure transducers to look for gas leaks.

Troubleshooting for low shield water pressure

Diagnostic code 532

Diagnostic code 532 identifies when the shield water pressure supplied to the cutting system is less than the required range. This condition can cause system shutdown or poor cut quality. Examination of water hoses, fittings, regulators, and possibly the use of a booster water pump can be necessary.

Symptoms

Code	Symptoms	XPR models	XPR action	Code cancels with...
532	For a minimum of 200 milliseconds, the shield water pressure (P9) is less than 50% of the setpoint (2.7 bar/39 psi), and the setpoint is more than 0.	All models	Ramp down	▪ Set process ▪ Remote on-off

Corrective action

1. Make sure that the shield water pressure supplied to the cutting system is between 2.76 bar – 7.93 bar (40 psi – 115 psi).

   If the pressure is less than 2.76 bar (40 psi), a "booster" water pump can be necessary to prevent system shutdown or bad cut quality. Refer to Shield-water requirements (VWI and OptiMix) on page 55.

2. Examine all water hoses and water hose inlet fittings for:

   - ☐ Damage or kinks that can restrict flow
   - ☐ Leaks that can decrease pressure

3. Replace any hoses that have damage or kinks.
4. Put the hoses in a different position if you find kinks that can be fixed.
5. Replace any fitting that has damage.
6. Tighten loose connections if found.
7. Examine water regulators for debris that can block the flow path.
8. Adjust the inlet water pressures to a minimum of 2.77 bar (40 psi) when cutting, if necessary.

   The Hypertherm-supplied regulator that is connected to the gas connect console is set at the factory. Do **not** adjust this regulator.

9. If you cannot find or correct the problem, speak to your cutting machine supplier or regional Hypertherm Technical Service team.

Troubleshooting for low shield gas pressure

Diagnostic code 534

Diagnostic code 534 identifies when the shield gas pressure in the cutting system is not within the required range. This condition can be caused by problems with the gas hoses, fittings, or the pressure regulator. It can be necessary to examine and adjust or replace these components.

Symptoms

Code	Symptoms	XPR models	XPR action	Code cancels with...
534	For a minimum of 600 milliseconds, the shield gas pressure is less than 75% of the setpoint, and the setpoint is more than 0.	All models	Ramp down	▪ Set process ▪ Remote on-off

Corrective action

1. Make sure that the consumables are correct for the operator-selected process.
2. Examine gas hoses and fittings for:
   - □ Damage and kinks that can restrict flow
   - □ Leaks that can decrease pressure
3. If the hoses and fittings are good, look at the CNC or XPR web interface to identify the shield gas pressure.

   For information about the recommended shield gas pressure by process type, refer to the *XPR Cut Charts Instruction Manual (809830)*.
4. Send a command to do a preflow test.

   Make sure that the pressure is within the correct range for the active process. For information about how to do this, refer to the instruction manual for your CNC.
5. Send a command to do a cutflow test, and continue with the following steps:
   a. Make sure that there is sufficient pressure on P14.

      An error occurs only if the value is less than 75% of the setpoint for at least 600 milliseconds.

   b. If the pressure is too high or too low, use the optional external shield gas regulator to decrease or increase the pressure.

   c. Examine voltage going to J21.1 and J21.2 for B2 and to J7 for V11.

      Refer to Valve states during operation on page 455 to identify if V11 is enabled. Look for voltage between 5 VDC – 24 VDC.

   d. If B2 and V11 do not have the correct voltage, examine the connections between the control PCB in the TorchConnect console and the valves.

      Make sure that the connections are fully engaged. If the connections are fully engaged but the code continues, replace the control PCB.
6. If you cannot get the recommended pressure, or if pressure is within range but the code continues, interchange B2 with B1 or B3, or interchange P14 with a different transducer.

If the code continues, replace B2 or P14, as necessary.

7. If you cannot find or correct the problem, speak to your cutting machine supplier or regional Hypertherm Technical Service team.

Troubleshooting for low coolant flow

Diagnostic codes 540 and 542

The low coolant flow diagnostic codes (540 and 542) can occur because of a low coolant level, blockages or damage in the coolant hoses, or problems with the coolant pump.

Symptoms

Code	Symptoms	XPR models	XPR action	Code cancels with...
540	For a minimum of 40 seconds after the coolant pump is set to ON, the coolant flow rate is less than 1.9 L/min (0.5 gal/min).	All models	Shut down	Remote on-off
542	**XPR170** and **XPR300**: For a minimum of 1 second, the coolant flow rate is less than 3.79 L/min (1 gal/min). **XPR460**: The low coolant flow rate limit is less than 2.5 L/min (0.66 gal/min) when the coolant temperature is ≤0°C (≤32°F) or less than 4.9 L/min (1.3 gal/min) when the coolant temperature is ≥40°C (104°F). For flow rates and temperatures that are between these values, use the same scale to calculate the limits. For example, a flow rate less than 3.8 L/min (1.0 gal/min) with a coolant temperature of ≥20°C (68°F) can also cause a 542 code to occur.			

Corrective action

1. Make sure that the coolant level in the coolant reservoir is sufficient.

   You can see the coolant level from the fill port inlet on the top of the plasma power supply. You also can see coolant levels on the CNC screen or the XPR web interface.

2. If the coolant reservoir is not full, fill it with coolant.

3. If the coolant reservoir level is sufficient, but the code continues:
   a. Make sure that the coolant pump is ON and the gauge is spinning.
   b. Make sure that the bypass is working.
   c. Examine the coolant hoses for restrictions or blockages.
   d. Make sure that the consumables are correct for the operator-selected process.
   e. Examine the coolant filter, and replace the filter if necessary.

      Refer to Remove old coolant from the plasma cutting system on page 278.

   f. Clean the coolant pump screen, or replace the screen if you find damage.
4. If coolant filter or coolant pump screen replacement is not necessary, do a coolant flow test to identify the source of a coolant leak or obstruction.
5. Send a process command to start the coolant pump.

   The coolant pump starts automatically when it receives a process command.
6. If the coolant flow test value is equal to or greater than the permitted limit, but the XPR web interface shows a lower value, examine the control PCB (PCB 1 in the plasma power supply) for +15 VDC on J8 pin 1 and pin 2.

If you get this condition...	Do these steps...
There is no voltage on J8 pin 1 and pin 2.	1. Examine the wire harness that connects to J8. 2. Look for a short. 3. If no short is found, replace the control PCB.
The voltage on J8 pin 1 and pin 2 is +15 VDC.	1. Examine the flow sensor output (in frequency) at the control PCB. 2. Measure the frequency on J8 pin 3 (pulse) and pin 2 (ground). 3. If the value is different by more than 0.8 L/min (0.2 gal/min), or if there are no pulses (0 Hz), replace the flow sensor.

Minimum flow rate limits		Frequency (Hz)
Liters per minute (L/min)	U.S. gallons per minute (gal/min)	
1.89 L/min	0.5 gal/min	15 Hz
3.78 L/min	1.0 gal/min	34 Hz
5.67 L/min	1.5 gal/min	54 Hz

7. If you cannot find or correct the problem, speak to your cutting machine supplier or regional Hypertherm Technical Service team.

Troubleshooting for high coolant flow

Diagnostic codes 543, 544

The high coolant flow diagnostic codes (543 and 544) can occur because of a failed coolant pump. Do these steps to make sure that the coolant pump is operating correctly.

Symptoms

Code	Symptoms	XPR models	XPR action	Code cancels with...
543	After the coolant pump stops, the coolant flow rate is more than 3.03 L/min (0.8 gal/min).	All models	Shut down	▪ Set process ▪ Remote on-off
544	For a minimum of 1 second, the coolant flow rate is more than 11.36 L/min (3.0 gal/min). This code can also occur when air is in the line or when there is a torch blowout.	All models	Shut down	Remote on-off

Corrective action

1. Look at the CNC or XPR web interface to make sure that the coolant pump is operational.
2. For diagnostic code 543, examine the coolant hoses.
    a. Make sure that you have Hypertherm-supplied coolant hoses.
    b. Replace the bad hoses with Hypertherm-supplied coolant hoses, if necessary.
3. For diagnostic code 544, do the following steps to reset the cutting system:
    a. Set the line-disconnect switch to the OFF position.
    b. Examine the torch for consumables that are missing or that have severe damage, which can cause the flow meter to give a higher flow value.

       A missing water tube can also have an effect on coolant flow.
    c. Set the line-disconnect switch to the ON position.
    d. Use the CNC or XPR web interface to send a process command to the cutting system.

       The coolant pump starts automatically when it receives a process command.
    e. If the code continues:
        - Examine the flow meter. Look for air bubbles in the sight glass. Air bubbles can cause the flow meter to give a higher flow value.
        - Make sure that the coolant level is slightly more than the level switch.

- Examine the hoses and hose fittings. Look for damage or loose connections.

4. If you cannot find or correct the problem, speak to your cutting machine supplier or regional Hypertherm Technical Service team.

Troubleshooting for low current

Diagnostic codes 550, 552 – 554

Diagnostic codes 550 and 552 – 554 identify a problem with a reduction in current in the plasma power supply.

Symptoms

Code	Symptoms	XPR models	XPR action	Code cancels with...
550	For a minimum of 10 milliseconds during a Steady state, the total current decreases to less than 50% of the current setpoint (setpoints can be different for different process types).	All models	End of cycle	▪ Start ▪ Set process ▪ Remote on-off
552	The Chopper 1 current decreases to less than 50% of the setpoint for 50 milliseconds, and the setpoint is more than 10 A.	All models	End of cycle	▪ Set process ▪ Remote on-off
553	The Chopper 2 current decreases to less than 50% of the setpoint for 50 milliseconds, and the setpoint is more than 10 A.	XPR300, XPR460		
554	The Chopper 3 current decreases to less than 50% of the setpoint for 50 milliseconds, and the setpoint is more than 10 A.	XPR460		

Corrective action

1. Examine the consumables, and replace consumables that have damage or excessive wear.
2. Do a test for gas leaks, and replace the leaking components if found.
3. Examine the J6 connector on the control PCB for loose connections, and tighten them if found.
4. Examine the contactors, and replace contactors that have damage.
5. Look for DC bus errors.
6. What system do you have?

XPR170	Go to step 8 on page 339.
XPR300 or XPR460	Continue with the next step.

7. Interchange the choppers, and make sure that the diagnostic code aligns with the change:
   a. If yes, the chopper is bad and must be replaced.
   b. If no, continue with the next step.
8. Examine the choppers and inductors.
9. Replace choppers or inductors that have damage, if found.
10. Make sure that the arc stays on the workpiece during cutting.
11. Make sure to use the correct techniques and ramp-down settings, especially for cutting holes in simple shapes on aluminum or stainless steel.

    If you do not use proper cutting techniques, diagnostic codes 552 – 554 can replace the diagnostic code for ramp-down errors (620) when the arc distance between the torch and the workpiece increases quickly.
12. If you cannot find or correct the problem, speak to your cutting machine supplier or regional Hypertherm Technical Service team.

Troubleshooting for high current

Diagnostic codes 555, 556, 557

Diagnostic codes 555 – 557 identify when the chopper current is too high.

Symptoms

Code	Symptoms	XPR models	XPR action	Code cancels with...
555	For a minimum of 10 milliseconds, the electric current for Chopper 1 is more than 170 A.	All models	Shut down	Remote on-off
556	For a minimum of 10 milliseconds, the electric current for Chopper 2 is more than 170 A.	XPR300, XPR460		
557	For a minimum of 10 milliseconds, the electric current for Chopper 3 is more than 170 A.	XPR460		

Corrective action

1. Examine the consumables, and replace the consumables that have damage or excess wear.
2. Do a test for gas leaks, and replace the leaking components if found.
3. Examine the contactors, and replace the contactors that have damage, if found.
4. Look for DC bus errors.
5. What system do you have?

XPR170	Go to step 7 on page 340.
XPR300 or XPR460	Continue with the next step.

6. Interchange the choppers and make sure that the diagnostic code aligns with the change:
   a. If yes, the chopper is bad and must be replaced.
   b. If no, continue with the next step.
7. Examine the choppers and inductors.
8. Replace choppers or inductors that have damage, if found.
9. Make sure that the arc stays on the workpiece during cutting.
10. If you cannot find or correct the problem, speak to your cutting machine supplier or regional Hypertherm Technical Service team.

Troubleshooting for over-temperature faults for choppers and coolant

Diagnostic codes 560 – 562, 587

Diagnostic codes 560 – 562 and 587 identify an over-temperature condition with choppers or coolant. The result can be:

- Potential damage to system components
- Decreased cut quality
- Safety risks because of the system operating outside of its safe temperature range

Symptoms

Code	Symptoms	XPR models	XPR action	Code cancels with...
560	The IGBT temperature for Chopper 1 is more than 75°C (167°F).	All models	Ramp down	Temperature is in range
561	The IGBT temperature for Chopper 2 is more than 75°C (167°F).	XPR300, XPR460		
562	The IGBT temperature for Chopper 3 is more than 75°C (167°F).	XPR460		
587	**XPR170** and **XPR300**: The coolant temperature in the plasma power supply is more than 85°C (185°F). **XPR460**: The coolant temperature in the cooler is more than 75°C (167°F).	All models		

Corrective action

1. Make sure that there is sufficient clearance around the plasma power supply.

   For sufficient ventilation, Hypertherm recommends a minimum separation distance of 1 meter (3.3 feet) between the plasma power supply and other objects or equipment.

2. Make sure that the ambient temperature at the location of the plasma power supply is in the permitted temperature range for cutting system operation.

   If the temperature around the plasma power supply is more than the temperature limit, you can get reduced performance and over-temperature diagnostic codes.

3. While all of the fans continue to operate, let the temperature of the cutting system decrease.

4. From the XPR web interface, make sure that the heat-exchanger fan speed is in the permitted range.

Fan type	Permitted range of speed
Large fans (254 mm / 10 inch)	2,800 RPM – 3,400 RPM
Small fans (120 mm / 4.7 inch)	5,600 RPM – 6,400 RPM

5. If the fan speed is in the permitted range, remove the power from the cutting system.

6. Remove the pump-side panel and the front panel from the plasma power supply.

7. Make sure that each heat-exchanger fan has no visible obstruction, dust, or debris.

   - ☐ The heat-exchanger area can collect large amounts of dust or debris. Multiple uses of compressed air is often necessary to clean this area. Use personal protective equipment for protection from airborne particulates and debris.
   - ☐ Make sure to keep fan rotation to a minimum during compressed air use. You can use a gloved hand to hold a fan in position, if necessary.

8. Measure the resistance for the thermistors:

   a. Disconnect the connector for each chopper, or remove the chopper thermistor wires from the connector.

      Doing this step makes it easier to measure only the resistance for the thermistors.

   b. Use a digital multimeter to measure the resistance from each thermistor wire, using these diagnostic codes and connector-pin locations:

Diagnostic code	Thermistor location	Location of thermistor wires / connector	Pins	
587, 670, 681	Heat exchanger, top	PCB 1	J1.2 pin 7	J1.2 pin 8
560, 667, 678	Chopper 1 (cold plate)	PCB 2	J9 pin 1	J9 pin 2
561, 668, 679	Chopper 2 (cold plate) (XPR300 and XPR460 only)	PCB 3	J9 pin 1	J9 pin 2

   c. Look for a resistance value that is outside of the minimum or maximum values in Ohmic resistance values for thermistors on page 343.

      At approximately 25°C (77°F), look for a resistance of approximately 10,000 ohms (Ω).

   d. For each resistance value that you measure, do the following:

If you see this condition...	Do these steps...
The resistance value is outside of the minimum or maximum value in Ohmic resistance values for thermistors on page 343.	Look for a wiring fault. Possible replacement of a thermistor is necessary. Speak to your cutting machine supplier or regional Hypertherm Technical Service team.
The resistance value is approximately 0 ohms (Ω).	1. Examine the wiring between each thermistor and its connector pins. 2. Look for shorts between wires or to the ground.
The resistance value is more than 100 ohms (Ω) and less than the minimum resistance value.	1. Remove the power from the cutting system. 2. Let the coolant get to a temperature that is ≤ 85°C (185°F). 3. Supply power to the cutting system. 4. Go back to the beginning of step 8 on page 342.

If you see this condition...	Do these steps...
The resistance continues to be less than the minimum ohmic value or does not change after the coolant is ≤ 85°C (185°F).	▪ Replace chopper 1 (PCB 2) for diagnostic code 560. ▪ Replace the copper pipe thermistor assembly for error code 587.
The thermistor resistance is in the permitted range when the thermistor is disconnected from the control PCB, and the code continues when the thermistor is reconnected to the control PCB.	Possible replacement of the control PCB is necessary. Speak to your cutting machine supplier or regional Hypertherm Technical Service team.
The resistance is in the permitted range.	You can continue to operate the plasma cutting system.

9. If you cannot find or correct the problem, speak to your cutting machine supplier or regional Hypertherm Technical Service team.

Ohmic resistance values for thermistors

This data can help you to identify if there is a problem with the thermistor or wiring.

Table 40 - Minimum and maximum ohmic resistance values for thermistors

Thermistor temperature	Minimum resistance (Ohms)	Maximum resistance (Ohms)
25°C (77°F)	9,000	11,000
35°C (95°F)	5,000	7,000
45°C (113°F)	3,900	4,900
55°C (131°F)	2,500	3,500
65°C (149°F)	1,500	2,500
75°C (167°F)	1,000	2,000
85°C (185°F)	750	1,250
95°C (203°F)	600	1,000
105°C (221°F)	400	800
115°C (239°F)	300	600
125°C (257°F)	200	500
135°C (275°F)	150	400

Table 40 - Minimum and maximum ohmic resistance values for thermistors (continued)

Thermistor temperature	Minimum resistance (Ohms)	Maximum resistance (Ohms)
145°C (293°F)	150	250
155°C (311°F)	125	225
165°C (329°F)	100	175

Troubleshooting for start switch faults

Diagnostic codes 570, 571, 574 – 577

Diagnostic codes 570 – 577 can identify problems with the CNC, PCB, discrete cable, or the D50 LED on the control PCB (PCB 1) in the plasma power supply.

Symptoms

Code	Symptoms	XPR models	XPR action	Code cancels with...
570	The Plasma Start switch is in the ON position before the cutting system goes into the Power-up state.	All models	None	▪ Start ▪ Set process ▪ Remote on-off
571	The Plasma Start switch is in the ON position before the cutting system goes into the Wait for Start state.			
574	The Plasma Start switch goes to the OFF position during the Preflow/Charge DC state.	All models	End of cycle	▪ Start ▪ Set process ▪ Remote on-off
575	The Plasma Start switch goes to the OFF position during the Ignite state.			
576	The Plasma Start switch goes to the OFF position during the Pilot Arc state.			
577	The Plasma Start switch goes to the OFF position during the Ramp-up state.			

Corrective action

1. Use the CNC or XPR web interface to make sure that the status of the cutting system is correct and to make sure that a cutting sequence is **not** active.
2. Remove the power from the cutting system.
3. Remove the control-side panel from the plasma power supply.

4. Supply power to the cutting system.
5. If the code continues after you supply power to the cutting system, examine the D50 LED on the control PCB (PCB 1) in the plasma power supply to find if it is illuminated.

If you see this condition...	Do these steps...
D50 is not illuminated.	There is a problem with the CNC. Refer to the instruction manual for your CNC for troubleshooting recommendations.
D50 is illuminated.	1. Remove the power from the cutting system. 2. Remove the connector from J14 on the rear of the plasma power supply. 3. Supply power to the cutting system. 4. Continue with the next step.

6. Examine D50 on PCB 1 again to find if it stays illuminated:

If you see this condition...	Do these steps...
D50 is illuminated while the discrete cable stays disconnected.	1. Examine the PCB for dust or other contaminants. 2. Use compressed air to remove dust, debris, or obstructions, if found. 3. If D50 stays illuminated with the discrete cable disconnected, there is a problem with the PCB. Speak to your cutting machine supplier.
D50 is not illuminated.	1. If the discrete cable has no visible damage, disconnect the cable from PCB 1. 2. Look for an open circuit between pin 3 and pin 4 of J14. 3. If the cable is good, make sure that the CNC output is set to OFF. 4. If there is a short circuit, make sure that the discrete cable is not shorted and that the CNC start signal output is set to OFF. A closed circuit can be an indication that the CNC sent a plasma-start signal or that the discrete cable has damage.
The diagnostic code goes away, but D50 is not illuminated while the discrete cable stays disconnected.	1. Look for shorts across the line. 2. Look for relays that are bad. 3. Look for loose connections. 4. Examine the discrete cable, and replace it if it has damage. Refer to Discrete interface cables on page 442.

7. If you cannot find or correct the problem, speak to your cutting machine supplier or regional Hypertherm Technical Service team.

Troubleshooting for over-temperature faults for inductors and transformers

Diagnostic codes 580 – 586, 589, 793

These over-temperature diagnostic codes identify when the temperature of the inductors or transformers in the plasma system is more than the permitted range.

Symptoms

Code	Symptoms	XPR models	XPR action	Code cancels with...
580	The temperature of one of the following inductors is more than 160°C (320°F): ▪ Inductor 1 (1A) ▪ Inductor 2 (1B) ▪ Inductor 3 (2A) ▪ Inductor 4 (2B) ▪ Inductor 5 (3A) ▪ Inductor 6 (3B) When conditions are normal, approximately 10 minutes are necessary for the plasma cutting system to become cool. Over-temperature diagnostic codes can occur when more than 10 minutes are necessary for the temperature of the plasma system to decrease. A high ambient temperature can have an effect on cooling time.	All models	Ramp down	Temperature is in range
581				
582		XPR300, XPR460		
583				
584		XPR460		
585				
586	For a minimum of 5 seconds, the temperature of a transformer is more than 160°C (320°F).	All models		
589		XPR460		
793	For a minimum of 5 seconds, the temperature of the control transformer is more than 160°C (320°F).	All models		

Corrective action

1. Make sure that there is sufficient clearance around the plasma power supply.

   For sufficient ventilation, Hypertherm recommends a minimum separation distance of 1 meter (3.3 feet) between the plasma power supply and other objects or equipment.

2. Make sure that the ambient temperature at the location of the plasma power supply is in the permitted temperature range for cutting system operation.

If the temperature around your plasma power supply is more than the temperature limit, you can get reduced performance and over-temperature diagnostic codes. Refer to Table 1 on page 28.

3. While all of the fans continue to operate, let the temperature of the cutting system decrease.
4. Make sure that the magnetics are at a temperature of ≤160°C (320°F) before you continue with the next step.
5. **Without removing the external side panel** on the plasma power supply, look through the ventilation trusses on the plasma power supply to examine the magnetics fans inside.

   Look through the ventilation trusses on the front of the plasma power supply to see the magnetics fans (254 mm / 10 inches) inside. It is **not** necessary to remove the external panels to see these fans. The magnetics fans are near the front and bottom.
6. From the XPR web interface, make sure that the speed for each magnetics fan is in the permitted range.

   During normal operation, it can be difficult to see individual blades because of the fast speed of the fan rotation. If you can easily see individual blades without the use of a strobe lamp, the rotation speed is possibly too slow.

Fan type	Permitted range of speed
Large fans (254 mm / 10 inches)	2,800 RPM – 3,400 RPM
Small fans (120 mm / 4.7 inches)	5,600 RPM – 6,400 RPM

7. If the speed of the fans is less than the permitted range, remove the electric power from the cutting system.
8. Remove the front panel from the plasma power supply.
9. If you find obstructions, debris, or dust, use compressed air to remove the obstruction, debris, or dust from the fans and from the magnetics area.

   The magnetics area can collect large amounts of dust or debris. Multiple uses of compressed air is often necessary to clean this area. Use personal protective equipment for protection from airborne particulates and debris.

   Make sure to keep fan rotation to a minimum during compressed air use. You can use a gloved hand to hold a fan in position, if necessary.
10. If the magnetics fans have no visible obstruction, dust, or debris:
    a. Disconnect the connector from the control PCB (for the magnetics).
    b. Use a digital multimeter and the following connector-pin locations to measure the resistance from each thermistor wire:

Thermistors are on the magnetics.

Diagnostic codes	Thermistor location	Location of thermistor wires/connector	1st connector pin	2nd connector pin
580, 660, 671	Inductor 1A	PCB 1 (plasma power supply)	J1.4 pin 3	J1.4 pin 4
581, 661, 672	Inductor 1B	PCB 1 (plasma power supply)	J1.4 pin 5	J1.4 pin 6
582, 662, 673	Inductor 2A	PCB 1 (plasma power supply)	J1.4 pin 7	J1.4 pin 8
583, 663, 674	Inductor 2B	PCB 1 (plasma power supply)	J1.2 pin 1	J1.2 pin 2
584, 664, 675	Inductor 3A	PCB 1 (plasma power supply)	J1.2 pin 3	J1.2 pin 4
585, 665, 676	Inductor 3B	PCB 1 (plasma power supply)	J1.2 pin 5	J1.2 pin 6
586, 666, 677	Transformer 1	PCB 1 (plasma power supply)	J1.4 pin 1	J1.4 pin 2
589, 682 , 683	Transformer 2	PCB 1 (plasma power supply)	J1.25 pin 1	J1.25 pin 2
791, 792, 793	Control transformer	PCB 1 (plasma power supply)	J1.25 pin 3	J1.25 pin 4

c. Look for a resistance value from each thermistor wire that is outside of the minimum or maximum value in Ohmic resistance values for thermistors on page 343.

   At approximately 25°C (77°F), look for a resistance of approximately 10,000 ohms (Ω).

d. For each resistance value that you measure, do the following:

If you see this condition...	Do these steps...
The ohmic resistance is outside of the minimum or maximum value in Ohmic resistance values for thermistors on page 343.	Look for a wiring fault. Possible replacement of a thermistor can be necessary. Speak to your cutting machine supplier or regional Hypertherm Technical Service team.
The resistance value is approximately 0 ohms (Ω).	1. Examine the wiring between each thermistor and its connector pins. 2. Look for shorts between wires or to the ground.
The thermistor resistance is in the permitted range when the thermistor is disconnected from the control PCB, and the code continues when the thermistor is reconnected to the control PCB.	Possible replacement of the control PCB can be necessary. Speak to your cutting machine supplier or regional Hypertherm Technical Service team. Refer to Plasma power supply control PCB (141545) diagram on page 392.

11. If you cannot find or correct the problem, speak to your cutting machine supplier or regional Hypertherm Technical Service team.

Troubleshooting for consumable part failure or no chopper current

Diagnostic codes 610 – 615 and 626 – 628

Diagnostic codes 610 – 615 identify a consumable part problem. Diagnostic codes 626 – 628 identify a condition when chopper current is not sufficient.

Symptoms

Code	Symptoms	XPR models	XPR action	Code cancels with...
610	A catastrophic failure of a consumable part is found on the Channel A Chopper 1 current signature.	All models	Ramp down	Remote on-off
611	A catastrophic failure of a consumable part is found on the Channel B Chopper 1 current signature.	All models		
612	A catastrophic failure of a consumable part is found on the Channel A Chopper 2 current signature.	XPR300, XPR460		
613	A catastrophic failure of a consumable part is found on the Channel B Chopper 2 current signature.	XPR300, XPR460		
614	A catastrophic failure of a consumable part is found on the Channel A Chopper 3 current signature.	XPR460		
615	A catastrophic failure of a consumable part is found on the Channel B Chopper 3 current signature.	XPR460		
626	For a minimum of 250 milliseconds after the Arc-on state starts, Chopper 1 does not make current.	All models	End of cycle	▪ Start ▪ Set process ▪ Remote on-off
627	For a minimum of 250 milliseconds after the Arc-on state starts, Chopper 2 does not make current.	XPR300, XPR460		
628	For a minimum of 250 milliseconds after the Arc-on state starts, Chopper 3 does not make current.	XPR460		

Corrective action

1. Examine the consumable parts for damage and excess wear.
2. If a consumable part must be replaced, refer to Install the consumables on page 145.
3. If you cannot find or correct the problem, speak to your cutting machine supplier or regional Hypertherm Technical Service team.

Troubleshooting for a ramp-down error

Diagnostic code 620

Diagnostic code 620 shows that there is a ramp-down error.

Symptoms

Code	Symptoms	XPR models	XPR action	Code cancels with...
620	The chopper duty cycle is more than the programmed limit. A ramp-down error can be the cause: ▪ During a ramp-down error, the arc distance between the torch and the workpiece increases quickly. ▪ Ramp-down errors can decrease consumable life. ▪ The plasma cutting system can sense and react to ramp-down errors. This helps to increase the life of consumable parts. Refer to Automatic ramp-down error protection on page 251.	All models	Ramp down	▪ Start ▪ Set process ▪ Remote on-off

Corrective action

1. Make sure to use correct cutting techniques:
    a. Use a workpiece that is large enough for the selected parts or nesting program.
    b. Use the correct parts or nesting program.

       Ramp-down errors can occur when you cut across large kerfs or cut at incorrect heights.
    c. Stop every cut with the plasma arc still attached to the workpiece.
    d. Decrease the cut speed when the end of the cut is near.
    e. Stop the plasma arc before the part is completely cut, or let the cut complete during ramp down.
    f. Program the path of the torch into the scrap area for ramp down.

Troubleshooting for high DC bus voltage

Diagnostic code 621

Diagnostic code 621 occurs when the DC bus voltage is too high.

Symptoms

Code	Symptoms	XPR models	XPR action	Code cancels with...
621	The DC bus voltage is more than 414 V.	All models	Shut down	Remote on-off

Corrective action

1. Make sure that the input-line voltage is within ±14% of nominal.

   Refer to General input power requirements on page 44.

2. If you cannot find or correct the problem, speak to your cutting machine supplier or regional Hypertherm Technical Service team.

Troubleshooting for low DC bus voltage

Diagnostic code 622

Diagnostic code 622 occurs when the DC bus voltage is too low.

Symptoms

Code	Symptoms	XPR models	XPR action	Code cancels with...
622	The DC bus voltage is less than 280.5 V.	All models	Shut down	Remote on-off

Corrective action

1. Make sure that the input-line voltage is within ±14% of nominal.

   Refer to General input power requirements on page 44.

2. Remove the power from the cutting system.
3. Remove the cover from the contactor.
4. Examine the contacts for excess wear, and replace the contactor if there is excess wear.

5. Examine the following contactor components for loose connections:
    a. Contactor
    b. Input to the chopper
    c. Power cord
6. Tighten loose connections if found.
7. Examine the connections from the control PCB on J6:
    a. Look for loose or bad connections on pin 5 and pin 6.
    b. Tighten loose connections, or replace bad connections.
8. Make sure that LED D1 on the power distribution PCB is illuminated.
9. If D1 is not illuminated, examine the power distribution PCB for:
    a. 120 VAC at the input (J1 pin 5 and pin 6)
    b. Continuity on fuse FH2 (with power OFF)
    c. 120 VAC at the output (J5 pin 7, pin 8, pin 9, and pin 10)
10. If 120 VAC is not present on the J5 contactor output pins, examine the J4 and K1 relay connections for damage.
11. If K1 is bad, replace either the power distribution PCB or the K1 relay (003257).
12. If you cannot find or correct the problem, speak to your cutting machine supplier or regional Hypertherm Technical Service team.

Troubleshooting for idle choppers with current

Diagnostic codes 623, 624, 625

Diagnostic codes 623 – 625 identify if current is present in a chopper when the chopper is in an idle state.

Symptoms

Code	Symptoms	XPR models	XPR action	Code cancels with...
623	Chopper 1 is in an idle state, and the chopper current is more than 10 A.	All models	None	Remote on-off
624	Chopper 2 is in an idle state, and the chopper current is more than 10 A.	XPR300, XPR460		
625	Chopper 3 is in an idle state, and the chopper current is more than 10 A.	XPR460		

Corrective action

1. Look for 24 VDC from the power sources (J2 pins 1 – 3).
2. If you find 24 VDC from the power sources, the chopper is bad.
3. Replace the chopper if necessary.

Troubleshooting for current sensor faults

Diagnostic code 631

Diagnostic code 631 can occur because of potential problems with the current sensor. Do a check of the specified connections. In some conditions it can be necessary to replace the I/O PCB (PCB 5).

Symptoms

Code	Symptoms	XPR models	XPR action	Code cancels with...
631	The current in the work cable is more than 5 A while the plasma cutting system is in the Wait for Start state.	All models	Shut down	Remote on-off

Corrective action

1. Remove the power from the cutting system.
2. Examine J1.8 on PCB 1 (the control PCB in the plasma power supply) and the work cable sensor on the I/O panel on PCB 5 (the I/O PCB in the plasma power supply) for damage and loose connections.
3. If the connections are good and the code continues, replace the I/O PCB.

4. If you cannot find or correct the problem, speak to your cutting machine supplier or regional Hypertherm Technical Service team.

Troubleshooting for manual-set mode faults

Diagnostic code 648

Diagnostic code 648 occurs when a condition stops manual-set mode. There are different smart-fault data values that you can get with a 648 code. The troubleshooting steps can be different for the different values. When you get a 648 code, make sure that you identify the smart-fault value before you start the troubleshooting steps.

Symptoms

Code	Symptoms	XPR models	XPR action	Code cancels with...
648	Manual-set mode is stopped or was canceled. You can see these smart-fault data values with the 648 code: ▪ 1: Waiting for user input ▪ 2: Canceled: - Firmware update - Invalid configuration - Set process	All models	None	▪ Start ▪ Set process ▪ Remote on-off

1: Waiting for user input

The operator must start the manual-set mode process.

1. Move the remote on-off switch from the ON position to the OFF position.
2. Move the remove on-off switch from the OFF position back to the ON position.

2: Canceled: Firmware update

A firmware update stopped manual-set mode.

1. Wait for the firmware update to complete.
2. Set the power to the cutting system to OFF and then back to ON.

2: Canceled: Invalid configuration

The operator or process changed, or the system can no longer set the process that was saved before. For example, you can see this value if a chopper is disconnected or when the type of gas connect console changes.

- Use one of the usual processing setting methods to save a new process for the configuration.

2: Canceled: Set process

The operator has set the process. No steps are necessary.

Troubleshooting for arc timeouts during the Ignite state

Diagnostic code 654

Diagnostic code 654 identifies a problem related to plasma arc timeouts at the start of a cut.

Symptoms

Code	Symptoms	XPR models	XPR action	Code cancels with...
654	During the Ignite state, Chopper 1 does not go into the Pilot Arc state for a minimum of 100 milliseconds.	All models	End of cycle	Remote on-off

Corrective action

1. Remove the power from the cutting system.
2. Supply power to the cutting system.
3. Send a process to the cutting system.
4. If you cannot find or correct the problem, speak to your cutting machine supplier or regional Hypertherm Technical Service team.

Troubleshooting for current in chopper during preflow

Diagnostic code 655

Diagnostic code 655 occurs when the chopper finds current during preflow.

Symptoms

Code	Symptoms	XPR models	XPR action	Code cancels with...
655	A chopper finds current during the Preflow/Charge DC state.	All models	Shut down	Remote on-off

Corrective action

1. Examine the consumable parts for damage or excess wear.
2. If it is necessary to replace a consumable part, refer to Install the consumables on page 145.
3. Examine the torch lead, and look for a short or open line condition.

Troubleshooting for a console reset message

Diagnostic code 691

Diagnostic code 691 occurs when the main control PCB receives a console reset message.

Symptoms

Code	Symptoms	XPR models	XPR action	Code cancels with...
691	The main control PCB receives a console reset message after power is supplied to the plasma cutting system.	All models	Shut down	Remote on-off

Corrective action

1. Examine the grounding for the cutting system.

   High frequency EMI (also known as noise) can reset the CAN node.
2. Make sure that the green power-indicator LED on the gas connect console and on the TorchConnect console is illuminated.
3. If an LED is not illuminated, examine the power distribution PCB and look for:
   a. Loose and poorly connected connectors and CAN cables
   b. Signs of 120 V (the D1 LED is illuminated)
4. If D1 is illuminated, examine the plasma power supply control PCB.

5. Make sure that the remote on-off switch is in the ON position (enabled) and the D89 LED is illuminated.

   If necessary, set the remote on-off switch to OFF and then back to ON.

6. If you cannot find or correct the problem, speak to your cutting machine supplier or regional Hypertherm Technical Service team.

   Make sure that you have the record ID for the error.

Troubleshooting for low inlet pressure for hydrogen, argon, or nitrogen

Diagnostic codes 695 – 697

Diagnostic codes 695 – 697 occur because gas inlet pressure in the gas connect console mixing module is less than the permitted range. Do a check of the gas inlet pressure during test cutflow and test preflow to find if the supply gas settings at the regulator are correct. Also examine the gas hoses and fittings.

Symptoms

Code	Symptoms	XPR models	XPR action	Code cancels with...
695	The hydrogen (H_2) inlet pressure (P10) for the mixing module in the gas connect console (only for OptiMix) is less than 7.6 bar ± 0.4 (110 psi ± 5).	All models	None	▪ Set process ▪ Remote on-off
696	The argon (Ar) inlet pressure (P11) for the mixing module in the gas connect console (only for OptiMix) is less than 7.6 bar ± 0.4 (110 psi ± 5).			
697	The nitrogen (N_2) inlet pressure (P12) for the mixing module in the gas connect console (only for OptiMix) is less than 7.6 bar ± 0.4 (110 psi ± 5).			

Corrective action

1. During test cutflow and test preflow, look at the CNC or XPR web interface to identify the gas inlet pressure in the mixing module inside the gas connect console.

   Look at:

   - ☐ The H_2 inlet pressure (P10) for code 695
   - ☐ The Ar inlet pressure (P11) for code 696
   - ☐ The N_2 inlet pressure (P12) for code 697

2. Make sure that the gas inlet pressures inside of the gas connect console are sufficient as specified in Permitted inlet pressures to gas connect consoles on page 358.
3. When gases are flowing and the pressure that you measured is not in the permitted range, use the regulators to increase the pressure, if necessary.

   Do **not** exceed the recommended pressures.
4. If the pressure stays too low, examine the gas hoses and gas inlet fittings for:

   - ☐ Damage or kinks that can restrict flow
   - ☐ Leaks that can decrease pressure
5. Replace the hoses if you find damage or kinks.
6. Put the hoses in a different position if you find kinks that can be fixed.
7. Replace fittings that have damage.
8. Tighten loose connections if found.
9. If you cannot find or correct the problem, speak to your cutting machine supplier or regional Hypertherm Technical Service team.

Permitted inlet pressures to gas connect consoles

Gas connect console	Permitted gas inlet pressures to the gas connect console				
	H_2	N_2	Ar	F5	H_20
Core	–	7.5 bar ± 0.4 (110 psi ± 5)	–	–	–
CorePlus	–	7.5 bar ± 0.4 (110 psi ± 5)	7.5 bar ± 0.4 (110 psi ± 5)	–	–
VWI	–	7.5 bar ± 0.4 (110 psi ± 5)	7.5 bar ± 0.4 (110 psi ± 5)	7.5 bar ± 0.4 (110 psi ± 5)	2.8 bar – 8.3 bar (40 psi – 120 psi)
OptiMix	7.6 bar ± 0.4 (110 psi ± 5)	7.6 bar ± 0.4 (110 psi ± 5)	7.6 bar ± 0.4 (110 psi ± 5)	7.9 bar ± 0.4 (115 psi ± 5)	2.8 bar – 8.3 bar (40 psi – 120 psi)

Troubleshooting for low inlet pressure for F5 gas

Diagnostic code 700

Diagnostic code 700 occurs because F5 gas inlet pressure in the gas connect console is less than the permitted range. Do a check of the pressures and examine the gas hoses and fittings.

Symptoms

Code	Symptoms	XPR models	XPR action	Code cancels with...
700	The F5 inlet pressure (P6) in the gas connect console (only for VWI or OptiMix) is less than 5.52 bar (80 psi) or more than 9.3 bar (135 psi).	All models	None	▪ Set process ▪ Remote on-off

Corrective action

1. During test cutflow and test preflow, look at the CNC or XPR web interface to identify the gas inlet pressure in the gas connect console.

   Look at the F5 inlet pressure (P6) for code 700.

2. Make sure that the gas inlet pressures inside of the gas connect console are sufficient as specified in Permitted inlet pressures to gas connect consoles on page 358.

3. When gases are flowing and the pressure that you measured is not in the permitted range, use the regulators to increase the pressure, if necessary.

   Do **not** exceed the recommended pressures.

4. If the pressure stays too low, examine the gas hoses and gas inlet fittings for:

   - ☐ Damage or kinks that can restrict flow
   - ☐ Leaks that can decrease pressure

5. Replace the hoses if you find damage or kinks.

6. Put the hoses in a different position if you find kinks that can be fixed.

7. Replace fittings that have damage.

8. Tighten loose connections if found.

9. If you cannot find or correct the problem, speak to your cutting machine supplier or regional Hypertherm Technical Service team.

Troubleshooting for low inlet pressure for water

Diagnostic code 701

Diagnostic code 701 occurs because water inlet pressure in the gas connect console is less than the permitted range. Do a check of the pressures, examine the water hoses and fittings, and make sure that the shield water quality is good.

Symptoms

Code	Symptoms	XPR models	XPR action	Code cancels with...
701	The water (H_2O) inlet pressure (P8) in the gas connect console (only for VWI or OptiMix) is less than 2.07 bar (30 psi).	All models	None	▪ Set process ▪ Remote on-off

Corrective action

1. During test cutflow and test preflow, look at the CNC or XPR web interface to identify water inlet pressure in the gas connect console.

   Look at the H_2O inlet pressure (P8) for code 701.

2. Make sure that the gas inlet pressures inside of the gas connect console are sufficient as specified in Permitted inlet pressures to gas connect consoles on page 358.

3. Make sure that the water inlet pressure is at least 2.07 bar (30 psi).

4. When water is flowing and the pressure that you measured is not in the permitted range, use the regulators to increase the pressure, if necessary.

   Do **not** exceed the recommended pressures.

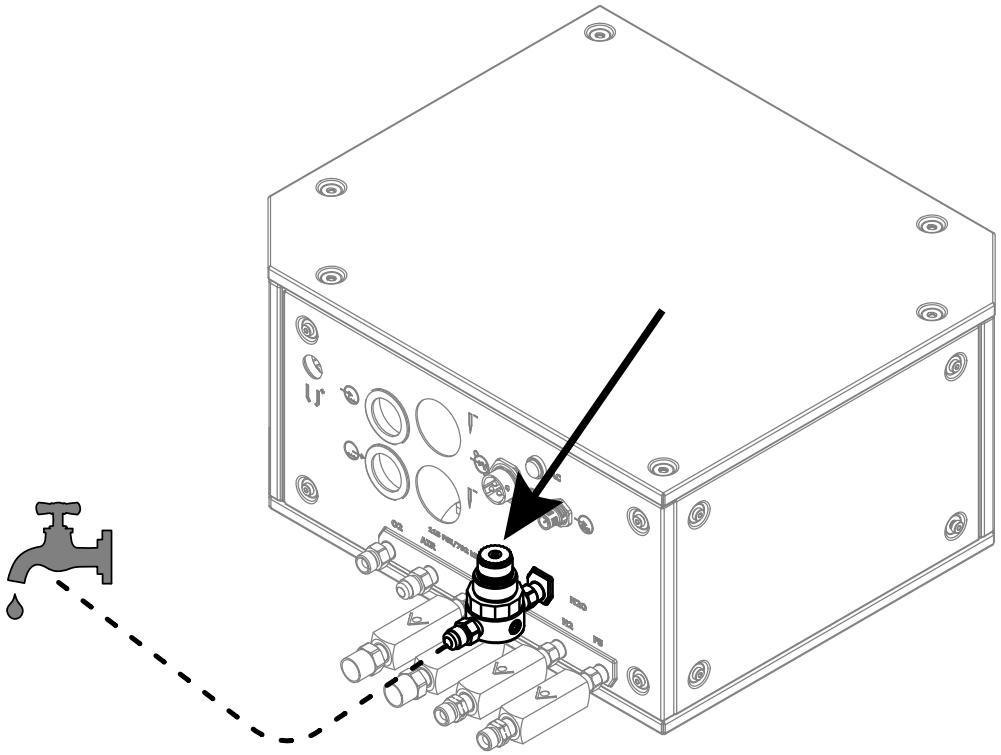

5. If the pressure stays too low, examine the gas hoses and gas inlet fittings for:
   - Damage or kinks that can restrict flow
   - Leaks that can decrease pressure
6. Replace the hoses if you find damage or kinks.
7. Put the hoses in a different position if you find kinks that can be fixed.
8. Replace fittings that have damage.
9. Tighten loose connections if found.
10. Make sure that the shield water quality is good.

    Bad quality can have a bad effect on the shield water regulator. It can cause diagnostic codes for low inlet pressure. Refer to Shield-water requirements (VWI and OptiMix) on page 55.
11. If you cannot find or correct the problem, speak to your cutting machine supplier or regional Hypertherm Technical Service team.

Troubleshooting for shield gas inlet pressure in the TorchConnect console

Diagnostic codes 702 – 705

When diagnostic codes 702 – 705 occur, do this troubleshooting procedure to fix problems with the inlet pressure inside the TorchConnect console. Make sure that gas inlet pressures are in the permitted range, and examine hoses and fittings for damage or kinks.

Symptoms

Code	Symptoms	XPR models	XPR action	Code cancels with...
702	For a minimum of 200 milliseconds, the nitrogen (N_2) inlet pressure (P4) in the TorchConnect console is less than 5.52 bar (80 psi) or more than 9.31 bar (135 psi).	All models	None	▪ Set process ▪ Remote on-off
703	For a minimum of 200 milliseconds, the oxygen (O_2) inlet gas pressure (P4) in the TorchConnect console is less than 5.52 bar (80 psi) or more than 9.31 bar (135 psi).			
704	For a minimum of 200 milliseconds, the air inlet pressure (P4) in the TorchConnect console is less than 5.52 bar (80 psi) or more than 9.31 bar (135 psi).			
705	For a minimum of 200 milliseconds, the argon (Ar) inlet pressure (P4) in the TorchConnect console is less than 5.52 bar (80 psi) or more than 9.31 bar (135 psi).			

Corrective action

1. Look at the CNC screen or XPR web interface to identify the inlet pressure inside the TorchConnect console.

   Look at:

   - ☐ The N_2 inlet pressure (P4) for code 702
   - ☐ The O_2 inlet pressure (P4) for code 703
   - ☐ The air inlet pressure (P4) for code 704
   - ☐ The Ar inlet pressure (P4) for code 705

2. Make sure that the gas inlet pressures inside the TorchConnect console are in the permitted range that is specified in Permitted inlet pressures to the TorchConnect console on page 363.
3. Use the regulators to increase or decrease the inlet pressure.
4. If the pressure stays too low, examine the gas hoses and gas inlet fittings for:

   - ☐ Damage or kinks that can decrease flow
   - ☐ Leaks that can decrease pressure

5. Replace the hoses if you find damage or kinks.

6. Reposition the hoses if you find fixable kinks.
7. Replace fittings that have damage.
8. Tighten loose connections if found.
9. If you cannot find or correct the problem, speak to your cutting machine supplier or regional Hypertherm Technical Service team.

Permitted inlet pressures to the TorchConnect console

Gas connect console	Permitted gas inlet pressures to the TorchConnect console			
	N_2	O_2	Air	Ar
Core	7.5 bar ± 0.4 (110 psi ± 5)	7.5 bar ± 0.4 (110 psi ± 5)	7.5 bar ± 0.4 (110 psi ± 5)	–
CorePlus	7.5 bar ± 0.4 (110 psi ± 5)	7.5 bar ± 0.4 (110 psi ± 5)	7.5 bar ± 0.4 (110 psi ± 5)	7.5 bar ± 0.4 (110 psi ± 5)
VWI	7.5 bar ± 0.4 (110 psi ± 5)	7.5 bar ± 0.4 (110 psi ± 5)	7.5 bar ± 0.4 (110 psi ± 5)	7.5 bar ± 0.4 (110 psi ± 5)
OptiMix	6.9 bar ± 0.7 (100 psi ± 10)	7.9 bar ± 0.4 (115 psi ± 5)	7.9 bar ± 0.4 (115 psi ± 5)	6.9 bar ± 0.7 (100 psi ± 10)

Troubleshooting for process-gas inlet pressure faults in the TorchConnect console for OptiMix systems

Diagnostic codes 702, 705, 769, and 770

The 702, 705, 769, and 770 diagnostic codes identify a problem with the process-gas inlet pressure. Process-gas inlet pressure has an effect on cut quality, cut speed, and consumable life.

The nitrogen (N_2) and Argon (Ar) gas regulators inside the OptiMix gas connect console are set at Hypertherm before the regulators are installed in the gas connect console. The regulators are set in a dynamic condition, when gas is flowing, with 7.9 bar – 9.3 bar (115 psi – 135 psi) on the inlet and 6.9 bar (100 psi) on the outlet. A downstream 1.6 mm (0.063 inch) orifice is part of both regulator setting configurations.

It can be necessary to adjust the regulators if the following conditions occur:

- The N_2 shield inlet (P4) pressure is more than 7.5 bar (110 psi) or less than 6.2 bar (90 psi).
- The Ar shield inlet (P4) pressure is more than 7.5 bar (110 psi) or less than 6.2 bar (90 psi).

Symptoms

Code	Symptoms	XPR models	XPR action	Code cancels with...
702	For a minimum of 200 milliseconds, the nitrogen (N_2) inlet pressure (P4) in the TorchConnect console is less than 5.52 bar (80 psi) or more than 9.31 bar (135 psi).	All models	None	▪ Set process ▪ Remote on-off
705	For a minimum of 200 milliseconds, the argon (Ar) inlet pressure (P4) in the TorchConnect console is less than 5.52 bar (80 psi) or more than 9.31 bar (135 psi).			
769	Line B Argon inlet pressure (P1) is less than 5.52 bar (80 psi) or more than 9.31 bar (135 psi).			
770	Line B N_2 inlet pressure (P1) is less than 5.52 bar (80 psi) or more than 9.31 bar (135 psi).			

⚠ WARNING



ELECTRIC SHOCK CAN KILL

The plasma power supply contains dangerous electric voltages that can seriously injure or kill you. Even if the plasma power supply is turned OFF, you can still get a serious electric shock if the plasma power supply remains connected to an electric power source.

Use extreme caution if you do diagnosis or maintenance tasks when the plasma power supply remains connected to an electric power source and the outer cover or panels are removed. All work that requires removal of the plasma power supply outer cover or panels must be done by a qualified technician. Refer to the *Safety and Compliance Manual (80669C)* for more safety information.

⚠ WARNING



ELECTRIC SHOCK CAN KILL

Voltages in the cutting system can cause serious electric shock. Electric shock can seriously injure or kill you.

When the line-disconnect switch is in the ON position, there is line voltage throughout the cutting system. Use extreme caution if you do diagnosis or maintenance tasks when the line-disconnect switch is in the ON position.

Corrective action to adjust the N_2 regulator

1. Install one of the following sets of consumables:
   - ☐ 460 A O_2/Air
   - ☐ 460 A N_2/N_2
   - ☐ 460 A Mix/N_2
   - ☐ 300 A O_2/Air
   - ☐ 300 A N_2/N_2
   - ☐ 300 A Mix/N_2
   - ☐ 170 A O_2/Air
   - ☐ 170 A N_2/N_2
   - ☐ 170 A Mix/N_2
2. Use the XPR web interface to select one of the following processes:
   - ☐ 2081 for 460 A N_2/N_2 aluminum or stainless steel
   - ☐ 2100 for 300 A N_2/N_2 aluminum or stainless steel
   - ☐ 2057 for 170 A N_2/N_2 aluminum or stainless steel
3. Remove the cover from the OptiMix gas connect console.
4. Pull up the N_2 regulator knob until the orange indicator is visible.

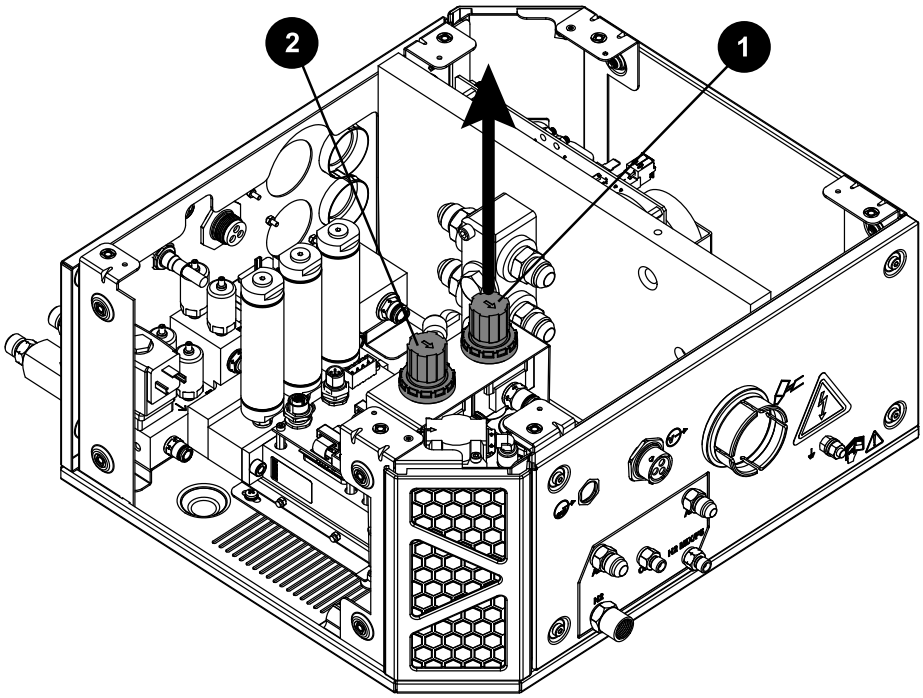

1 Nitrogen (N_2) regulator knob

2 Argon (Ar) regulator knob

5. Go to **Gas System** in the XPR web interface.
6. Select **TEST PREFLOW**.
7. While the gas flows, adjust the regulator until the shield inlet sensor (P4) on the web interface is 6.9 bar (100 psi).

   Oscillations in the flow rates in the mixer N_2 line can occur when the N_2 regulator in the gas connect console is set to too high of a pressure to the N_2 shield line. Decrease the pressure output of this regulator to decrease the pressure oscillations.

Corrective action to adjust the Ar regulator

1. Install one of the following sets of consumables:
   - ☐ 460 A O_2/Air
   - ☐ 300 A O_2/Air
   - ☐ 170 A O_2/Air
2. Use the XPR web interface to select one of the following processes:
   - ☐ 2074 for Mix/N_2 (Ar pierce assist) stainless steel and aluminum

- 1205 for O_2/N_2 mild steel
- 1157 for O_2/Air (Ar pierce assist) mild steel

3. Remove the cover for the OptiMix gas connect console.
4. Pull up the Ar regulator knob until the orange indicator is visible.
5. Go to **Gas System** in the XPR web interface.
6. Select **TEST PIERCEFLOW**.
7. While the gas flows, adjust the regulator until the shield inlet sensor (P4) on the web interface is 6.9 bar (100 psi).

Troubleshooting for pressure transducer faults

Diagnostic codes 706 – 715

Diagnostic codes 706 – 715 identify a problem with a pressure sensor in the TorchConnect console or the gas connect console.

Symptoms

Code	Symptoms	XPR models	XPR action	Code cancels with...
706	The P1 pressure sensor in the TorchConnect console is not found.	All models	Ramp down	▪ Set process ▪ Remote on-off
707	The P2 pressure sensor in the TorchConnect console is not found.			
708	The P3 pressure sensor in the TorchConnect console is not found.			
709	The P4 pressure sensor in the TorchConnect console is not found.			
710	The P5 pressure sensor in the TorchConnect console is not found.			
711	The P14 pressure sensor in the TorchConnect console is not found.			
712	The P6 pressure sensor in the gas connect console is not found. (VWI or OptiMix only)			
713	The P7 pressure sensor in the gas connect console is not found. (VWI or OptiMix only)			
714	The P8 pressure sensor in the gas connect console is not found. (VWI or OptiMix only)			
715	The P9 pressure sensor in the gas connect console is not found.			

Corrective action

1. Remove the power from the cutting system.
2. Examine the pressure transducer for the diagnostic code that you see.

   For example:

   - ☐ If the code shows P1-TCC, examine the P1 pressure transducer in the TorchConnect console.
   - ☐ If the code shows P6-GCC, examine the P6 pressure transducer in the gas connect console.

3. Make sure that the pressure transducer is correctly connected to:

   - ☐ TorchConnect console control PCB
   - ☐ Gas connect console control PCB

4. Install the pressure transducer correctly if you find loose or incorrect connections.

5. If you find damage, replace the control PCB that has damage.
6. Replace the pressure transducer.
7. If you cannot find or correct the problem, speak to your cutting machine supplier or regional Hypertherm Technical Service team.

Troubleshooting for invalid processes

Diagnostic code 716

Diagnostic code 716 occurs when there is a problem with the cut process sent to the CNC. There are six different smart-fault data values that you can get with a 716 code. The troubleshooting steps are different for the different values. When you get a 716 code, make sure that you identify the smart-fault value before you send a process change.

For an overview of the troubleshooting process for the 716 code, refer to Troubleshooting flowchart for diagnostic code 716 on page 371.

Symptoms

Code	Symptoms	XPR models	XPR action	Code cancels with...
716	The operator-selected process is not supported by this plasma cutting system. There are six smart-fault data values for the 716 code: ▪ 1: invalid id ▪ 2: invalid user ▪ 3: invalid user source ▪ 4: invalid process ▪ 5: not allowed or system not ready ▪ 6: not supported	All models	None	▪ Set process ▪ Remote on-off

1: invalid id

The process ID is equal to zero (0).

- Select a process ID for the application.

  Refer to the *XPR Cut Charts Instruction Manual (809830)*.

2: invalid user

Another interface has control of the cutting system.

Only one communication method at a time can send a process ID to the plasma cutting system. The communication methods are:

- Serial
- EtherCAT
- Wireless
- Ethernet LAN

3: invalid user source

Another interface has control of the cutting system.

Only one wireless interface at a time can send a process ID to the plasma cutting system.

- Select or change the interface that has control of the plasma cutting system.

  Refer to Change the device that has control on page 206.

  If the CNC has control and you change control to another device using the **RESET OPERATOR** button in the XPR web interface, you can get a 716 code if you try to send a process from the CNC. If this occurs, select **RESET OPERATOR** again on the same device as before to give control back to the CNC. In some conditions, it can also be necessary to set the line-disconnect switch to OFF and then back to ON. The **RESET OPERATOR** button was added to the web interface in XPR firmware version U.

4: invalid process

An incorrect process ID was sent.

- Select the correct process ID for the application.

  Refer to the *XPR Cut Charts Instruction Manual (809830)*.

5: not allowed or system not ready

The cutting system is not prepared for a new process ID. It can only accept a process ID during the following states:

- Initial Checks state (2)
- Inert Gas Purge state (4)
- Wait for Start state (5)

- Manual Leak Test state (20)
- End of Cycle state (14)

1. Wait until gas purge is complete or until cutting is complete.

   The plasma cutting system cannot accept a new process ID during gas purge or cutting.

2. If you cannot find or correct the problem, speak to your cutting machine supplier or regional Hypertherm Technical Service team.

6: not supported

The different gas connect consoles have different capabilities. For example, argon assist and argon marking for mild steel are available for cutting systems installed with OptiMix, VWI, or CorePlus gas connect consoles, but not with Core.

This code can also occur when more amperage is necessary for the selected process than the cutting system can supply. For example, you can get this code if you select a 460 A process when you are using an XPR460 that has Chopper 3 disconnected or if you are using an XPR170 or XPR300.

- Select a process that aligns with the amperage that your cutting system can supply, the gas connect console you are using, and the type of cutting that you are trying to do.

  Refer to:

  - Process selection on page 237
  - Cut charts on page 239

Troubleshooting flowchart for diagnostic code 716

Refer to these flowcharts for an overview of the troubleshooting process for the 716 diagnostic code.

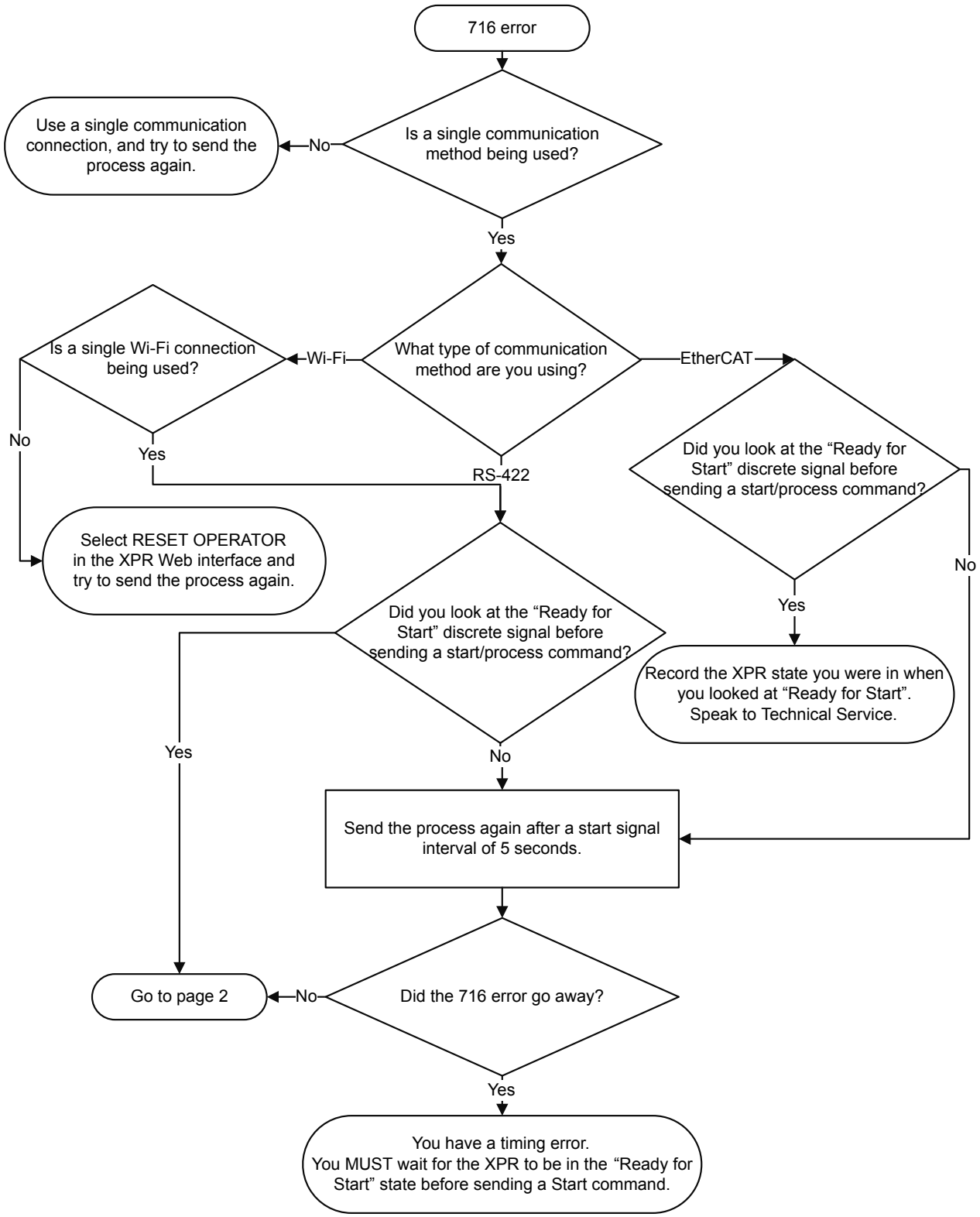
716 error
Is a single communication method being used?
No
Use a single communication connection, and try to send the process again.
Yes
What type of communication method are you using?
Wi-Fi
Is a single Wi-Fi connection being used?
No
Yes
EtherCAT
Did you look at the “Ready for Start” discrete signal before sending a start/process command?
No
Yes
Record the XPR state you were in when you looked at “Ready for Start”. Speak to Technical Service.
RS-422
Select RESET OPERATOR in the XPR Web interface and try to send the process again.
Did you look at the “Ready for Start” discrete signal before sending a start/process command?
Yes
No
Send the process again after a start signal interval of 5 seconds.
Did the 716 error go away?
No
Go to page 2
Yes
You have a timing error.
You MUST wait for the XPR to be in the “Ready for Start” state before sending a Start command.

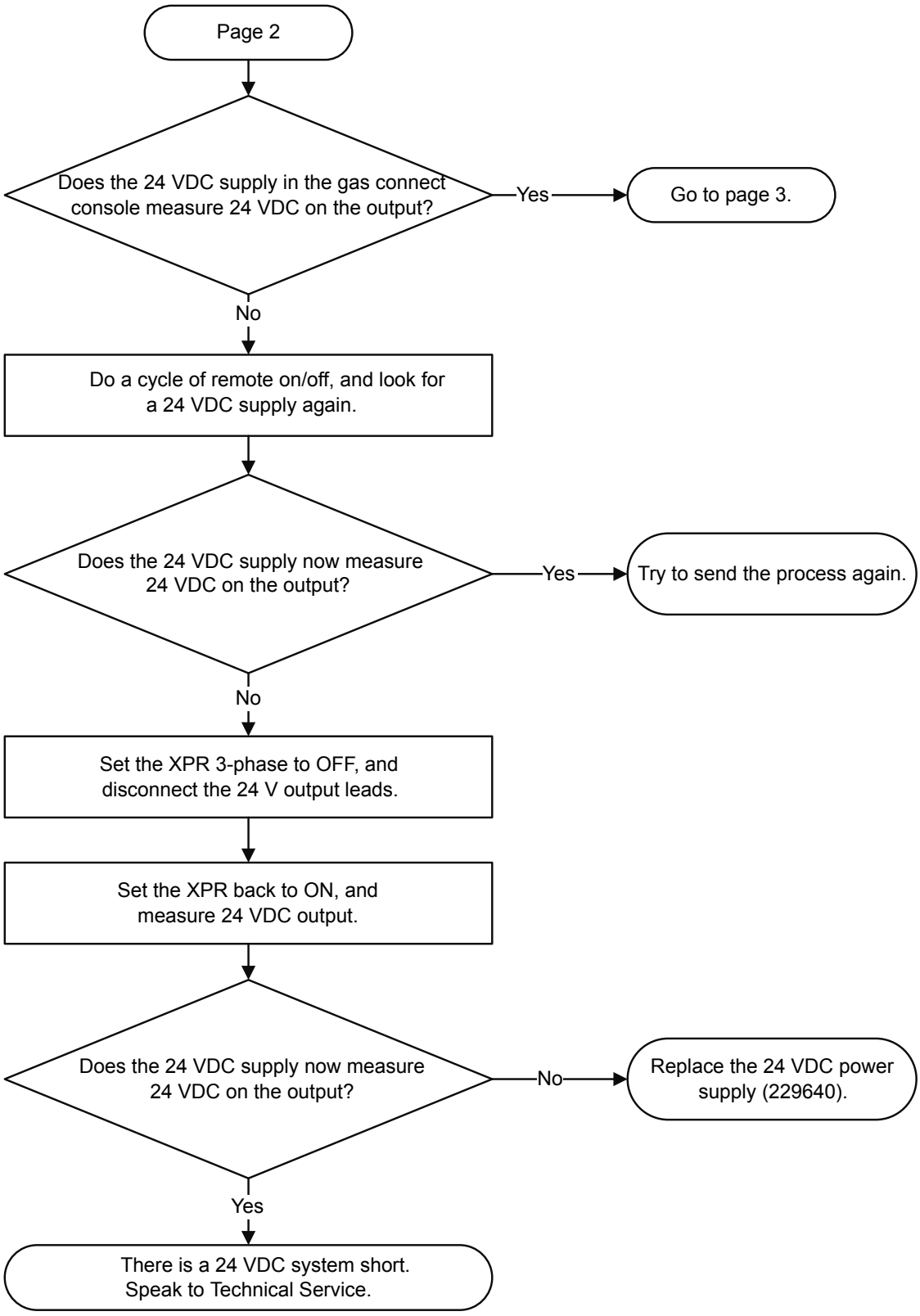
Page 2
Does the 24 VDC supply in the gas connect console measure 24 VDC on the output?
Yes
Go to page 3.
No
Do a cycle of remote on/off, and look for a 24 VDC supply again.
Does the 24 VDC supply now measure 24 VDC on the output?
Yes
Try to send the process again.
No
Set the XPR 3-phase to OFF, and disconnect the 24 V output leads.
Set the XPR back to ON, and measure 24 VDC output.
Does the 24 VDC supply now measure 24 VDC on the output?
No
Replace the 24 VDC power supply (229640).
Yes
There is a 24 VDC system short. Speak to Technical Service.

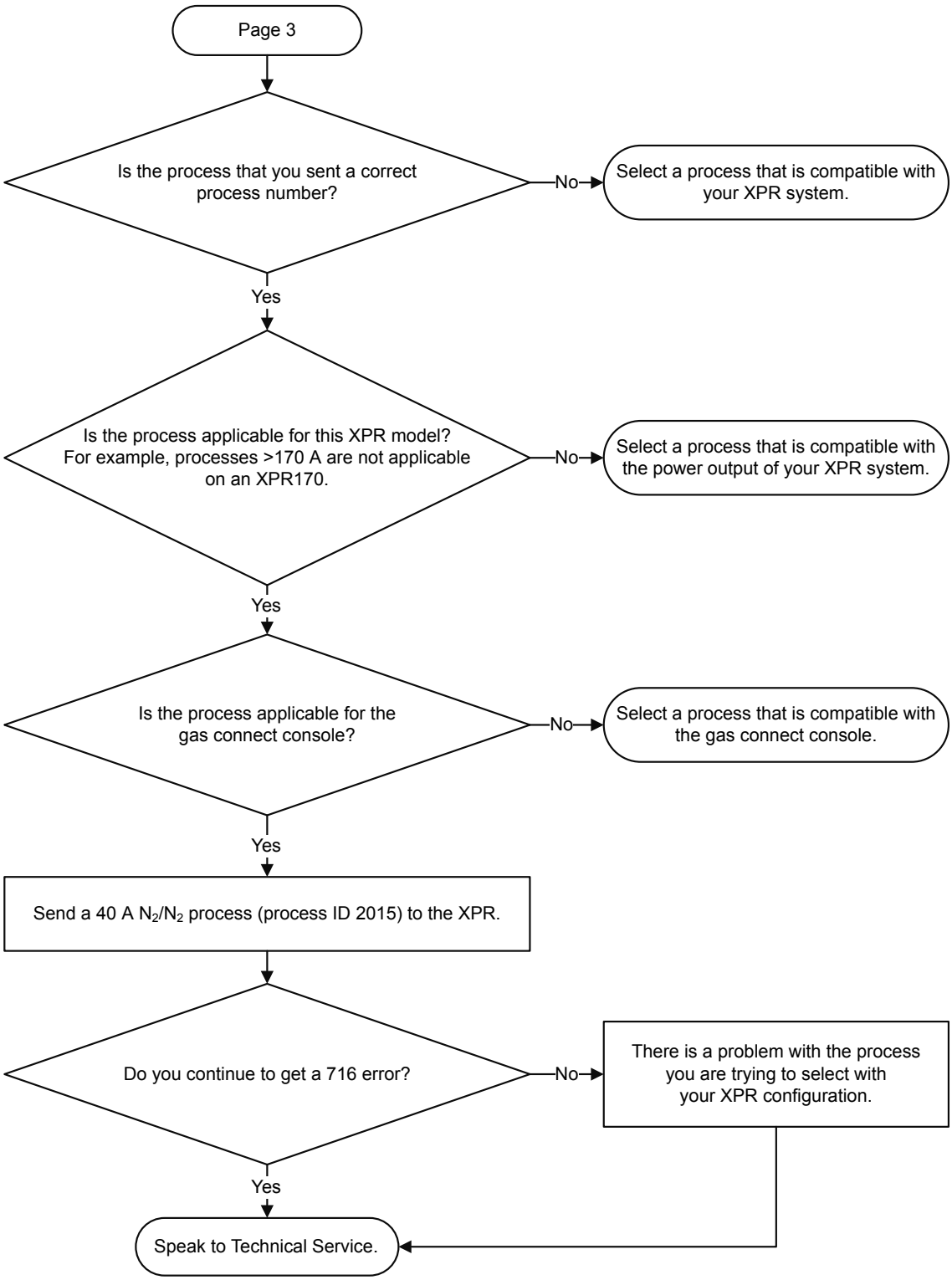
Page 3
Is the process that you sent a correct process number?
No
Select a process that is compatible with your XPR system.
Yes
Is the process applicable for this XPR model? For example, processes >170 A are not applicable on an XPR170.
No
Select a process that is compatible with the power output of your XPR system.
Yes
Is the process applicable for the gas connect console?
No
Select a process that is compatible with the gas connect console.
Yes
Send a 40 A N_2/N_2 process (process ID 2015) to the XPR.
Do you continue to get a 716 error?
No
There is a problem with the process you are trying to select with your XPR configuration.
Yes
Speak to Technical Service.

Troubleshooting for duty cycle limit on proportional valve supply voltage

Diagnostic code 719

This code occurs when a proportional valve supply voltage for some gases is at maximum duty cycle.

Symptoms

Code	Symptoms	XPR models	XPR action	Code cancels with...
719	The H_2, Ar, or N_2 proportional valve supply voltage is at 100% duty cycle. Total flow is decreased to keep the mix percentage of the other gases accurate. (OptiMix only) Because the mixer tries to supply a flow, the outlet pressure can continue to increase.	All models	None	▪ Start ▪ Set process ▪ Remote on-off

Corrective action

1. Make sure that the consumables are correct.
2. Make sure that the inlet pressures for N_2, Ar, and H_2 are consistently in the permitted range.
3. Make sure that you have the most recent XPR firmware.

   You can log into the Xnet at www.hypertherm.com to download it.

Troubleshooting for pressure out is greater than pressure in

Diagnostic code 720

Diagnostic code 720 occurs when the output pressure is more than the input pressure on the mixer.

Symptoms

Code	Symptoms	XPR models	XPR action	Code cancels with...
720	Pressure out (P21) is more than one of the pressures on the inlet side of the mixer (P10 – P12) by 0.069 bar (1 psi) or more. (OptiMix only) When this occurs, the mixer decreases flow to prevent backflow, which can have an effect on cut quality.	All models	None	▪ Start ▪ Set process ▪ Remote on-off

Corrective action

1. Make sure that the consumables are correct.
2. Make sure that the supply gas pressure is sufficient.
3. Make sure that there is a sufficient quantity of gas in the gas cylinders, if necessary.
4. Increase the N_2, Ar, and H_2 pressure during test cutflow to be in the permitted range.
5. Make sure that you have the most recent XPR firmware.

   You can log into the Xnet at www.hypertherm.com to download it.

Troubleshooting for gas mixture faults

Diagnostic codes 721 – 723, 726

Diagnostic codes 721–723 and 726 occur when there is a gas mixture failure.

Symptoms

Code	Symptoms	XPR models	XPR action	Code cancels with...
721	There was a failure of the mixing parameter checksum. (OptiMix only)	All models	Ramp down	▪ Set process ▪ Remote on-off
722	There was a failure of the mixing flow calibration. (OptiMix only)			
723	There was a failure of the mixing pressure calibration. (OptiMix only)			
726	There is a problem with the mixing system clock. (OptiMix only)			

Corrective action

1. Use the remote on-off switch to set the cutting system to OFF.
2. Use the remote on-off switch to set the cutting system back to ON.
3. Make sure that all of the wire harness connections for the gas mixer module are correct and are fully tightened.
4. If the diagnostic code continues:
    a. Replace the gas mixer module.

       Refer to VWI and OptiMix gas connect console mixer, transducers, and valves on page 423.
    b. If a new gas mixer module does not repair the problem, replace the gas connect console.

Troubleshooting for gas mixture communication errors

Diagnostic codes 724, 725, 742, 743

Diagnostic codes 724, 725, 742, and 743 occur when there is gas mixing communication error.

Symptoms

Code	Symptoms	XPR models	XPR action	Code cancels with...
724	There is a mixing communication error on I2C1. (OptiMix only)	All models	Ramp down	▪ Set process ▪ Remote on-off
725	There is a mixing communication error on I2C2. (OptiMix only)			
742	There is a mixing alert for I2C1. (OptiMix only)	All models	None	
743	There is a mixing alert for I2C2. (OptiMix only)			

Corrective action

1. Examine the cable that is used to connect the gas connect console to ground:
    a. Connect the cable if it is loose or not connected.
    b. Repair or replace the cable if it has damage.
2. Make sure that there is no damage to the ribbon cables that connect the gas mixer control PCB to the flow meters.
3. Make sure that all external panels for all system components are in position and installed correctly.

4. Make sure that all hardware that holds the external panels is in position and is fully tightened.
5. If the diagnostic code continues, replace the gas mixer module.

   Refer to VWI and OptiMix gas connect console mixer, transducers, and valves on page 423.

Troubleshooting for solenoid valve V1 in the TorchConnect console

Diagnostic code 730

This code occurs when there is a fault condition for valve V1 in the TorchConnect console.

Symptoms

Code	Symptoms	XPR models	XPR action	Code cancels with...
730	There is a fault condition for receptacle valve V1 at the PCB in the TorchConnect console.	All models	Ramp down	▪ Set process ▪ Remote on-off

Corrective action

1. Examine the valve driver cable connections for the valve receptacle in the TorchConnect console.
2. Replace the V1 valve if you find damage or excess wear.
3. If the code continues, examine the leads, and make sure that the continuity in the leads is good.
4. If the continuity is good and the code continues, replace the control PCB in the TorchConnect console.

Troubleshooting for solenoid valves V4 – V12 in the TorchConnect console

Diagnostic codes 733 – 741

Diagnostic codes 733 – 741 occur when there is an error condition for one or more of the V4 – V12 valves in the TorchConnect console.

Symptoms

Code	Symptoms	XPR models	XPR action	Code cancels with...
733	There is an error condition for valve V4 at the PCB in the TorchConnect console.	All models	Ramp down	▪ Set process ▪ Remote on-off
734	There is an error condition for valve V5 at the PCB in the TorchConnect console.			
735	There is an error condition for valve V6 at the PCB in the TorchConnect console.			
736	There is an error condition for valve V7 at the PCB in the TorchConnect console.			
737	There is an error condition for valve V8 at the PCB in the TorchConnect console.			
738	There is an error condition for valve V9 at the PCB in the TorchConnect console.			
739	There is an error condition for valve V10 at the PCB in the TorchConnect console.			
740	There is an error condition for valve V11 at the PCB in the TorchConnect console.			
741	There is an error condition for valve V12 at the PCB in the TorchConnect console.			

Corrective action

1. Examine the wiring for the valve.
2. Connect the valve wire to another valve.

   If the diagnostic code goes away, the valve is bad.
3. Replace the bad valve.
4. If the code continues, examine the leads, and make sure that the continuity in the leads is good.
5. If the continuity is good and the code continues, replace the control PCB in the TorchConnect console.

Fan diagnostic codes diagram

Each fan is related to a different diagnostic code.

Figure 72 - Diagnostic code for each fan

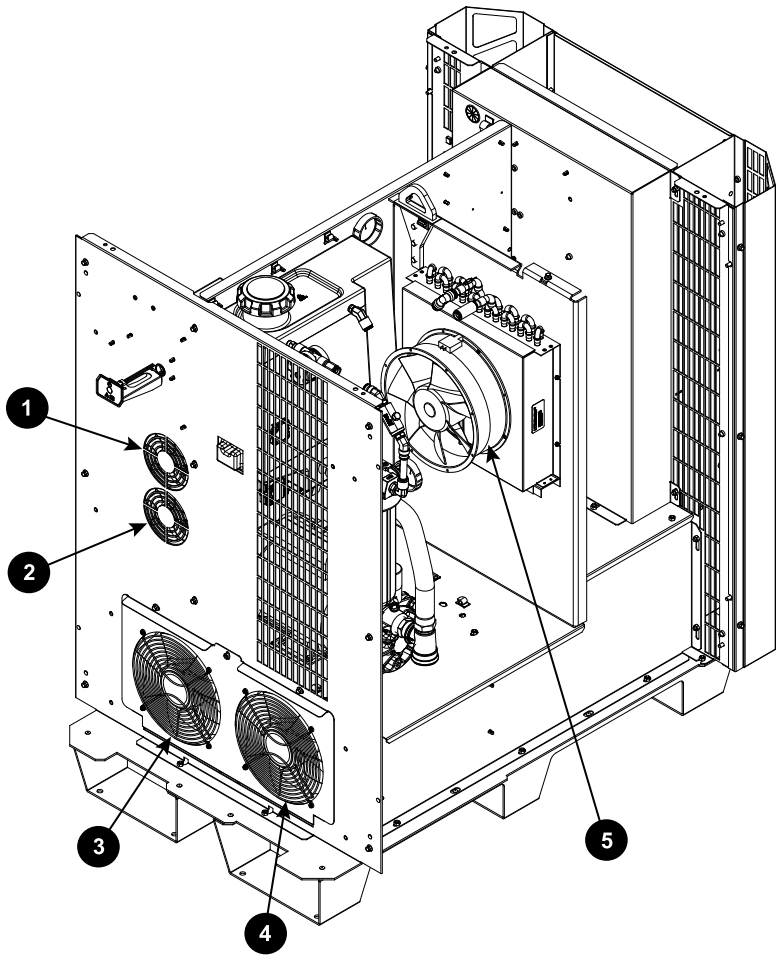

	Diagnostic code	Fan
1	750	CTRLFAN 1
2	751	CTRLFAN 2
3	744	MAGFAN 1
4	745	MAGFAN 2
5	748	HXFAN 1

Troubleshooting for low fan speeds – MAGFAN

Diagnostic codes 744 – 746

Diagnostic codes 744 – 746 occur when a magnetics fan is under performing.

Symptoms

Code	Symptoms	XPR models	XPR action	Code cancels with...
744	The fan tachometer feedback for MAGFAN 1 is less than the minimum acceptable value.	All models	None	▪ Set process ▪ Remote on-off
745	The fan tachometer feedback for MAGFAN 2 is less than the minimum acceptable value. For the XPR170, code 745 starts the End of Cycle State because the system has a smaller number of thermistors and different magnetics behind MAG-FAN 2.	All models	End of cycle	
746	The fan tachometer feedback for MAGFAN 3 is less than the minimum acceptable value.	XPR460	None	

Corrective action for code 744

1. Use the Fan diagnostic codes diagram on page 379 to identify the location of the MAGFAN in the plasma power supply.
2. Make sure that the following fan connections are good, and tighten loose connections if found:
    a. The fan connector
    b. The wiring to J2 and J5 on the fan power distribution PCB
    c. The wiring to J7 on the control PCB
3. Examine the 48 VDC power source output.
4. If the power output is not correct, replace the 48 VDC power source.
5. Examine the solid-state relay, and make sure that it is operating correctly.
6. If you do not find any loose connections and the 48 VDC power source and solid-state relay are good, replace the fan.

Corrective action for code 745

1. Use the remote on-off switch to set the power to OFF.
2. Use the remote on-off switch to set the power back to ON.
3. Send a process ID to the plasma cutting system, and select the **Start** command to fire the torch.
4. Use the Fan diagnostic codes diagram on page 379 to identify the location of the MAGFAN in the plasma power supply.

5. Make sure that the fan motor is ON, and examine the fan:

If you see this condition...	Do these steps...
The fan blades are turning while the fan motor is ON.	The fan tachometer is bad. Replace the fan.
The fan blades are not turning while the fan motor is ON.	Make sure that the following fan connections are good, and tighten loose connections if found: ▪ The fan connector ▪ The wiring to J2 and J5 on the fan power distribution PCB ▪ The wiring to J7 on the control PCB

   If MAGFAN 2 is defective, you can temporarily interchange that fan with MAGFAN 1. **Do not operate the plasma cutting system without a magnetics fan that is operating correctly.**

6. Examine the 48 VDC power source output.
7. If the power output is not correct, replace the 48 VDC power source.
8. If you do not find any loose connections and the 48 VDC power source and solid state relay are good, replace the fan.

Troubleshooting for low fan speeds – HXFAN

Diagnostic codes 748 and 749

Diagnostic codes 748 and 749 occur when a heat exchanger fan is under performing.

For XPR170 and XPR300, the heat exchanger fans are in the plasma power supply. For XPR460, the heat exchanger fans are in the cooler.

Symptoms

Code	Symptoms	XPR models	XPR action	Code cancels with...
748	The fan tachometer feedback for HXFAN 1 is less than the minimum acceptable value.	All models	None	▪ Set process ▪ Remote on-off
749	The fan tachometer feedback for HXFAN 2 is less than the minimum acceptable value.	XPR300, XPR460		

Corrective action

1. Use the Fan diagnostic codes diagram on page 379 to identify the location of the HXFAN in the plasma power supply.

2. Make sure that the following fan connections are good, and tighten loose connections if found:
    a. The fan connector
    b. The wiring to J2 on the fan power distribution PCB (PCB 6 in the plasma power supply)
    c. The wiring to J3 (HXFAN 1) and J4 (HXFAN 2) on the fan power distribution PCB (PCB 6 in the plasma power supply)
    d. The wiring to J7 on the control PCB
3. Examine the 48 VDC power source output.
4. If the power output is not correct, replace the 48 VDC power source.
5. Examine the solid-state relay, and make sure that it is operating correctly.
6. If you do not find any loose connections and the 48 VDC power source and solid-state relay are good, replace the fan.

Troubleshooting for low fan speeds – CTRLFAN 1 / CAB FAN 1

Diagnostic codes 747 and 750

XPR170 and XPR300: Diagnostic code 750 occurs when the CTRLFAN 1 fan is not operating to specifications.

XPR460: Diagnostic code 747 occurs when the CAB FAN 1 fan is not operating to specifications.

Symptoms

Code	Symptoms	XPR models	XPR action	Code cancels with...
747	The fan speed for CAB FAN 1 is less than the minimum acceptable Revolutions Per Minute (RPM) value.	XPR460	None	▪ Set process ▪ Remote on-off
750	The fan speed for CTRLFAN 1 is less than the minimum acceptable RPM value.	XPR170, XPR300		

Corrective action

1. Use the Fan diagnostic codes diagram on page 379 to identify the location of CTRLFAN 1 (XPR170, XPR300) or CAB FAN 1 (XPR460) in the plasma power supply.
2. Make sure that the following fan connections are good, and tighten loose connections if found:
    a. The fan connector

b. The wiring to J7 on the fan power distribution PCB

c. The wiring to J7 on the control PCB

3. Tighten loose connections if found.
4. Examine the 48 VDC power source output.
5. If the power output is not correct, replace the 48 VDC power source.
6. If you do not find any loose connections and the 48 VDC power source is good, replace the fan.

Troubleshooting for low fan speeds – CTRLFAN 2

Diagnostic code 751

Diagnostic code 751 occurs when the CTRLFAN 2 fan is not operating to specifications.

Symptoms

Code	Symptoms	XPR models	XPR action	Code cancels with...
751	The fan speed for CTRLFAN 2 is less than the minimum acceptable RPM value.	XPR170, XPR300	None	▪ Set process ▪ Remote on-off

Corrective action

1. Use the Fan diagnostic codes diagram on page 379 to identify the location of CTRLFAN 2 in the plasma power supply.
2. Make sure that the following fan connections are good, and tighten loose connections if found:

   a. The fan connector

   b. The wiring to J8 on the fan power distribution PCB

   c. The wiring to J7 on the control PCB
3. Examine the 48 VDC power source output.
4. If the power output is not correct, replace the 48 VDC power source.
5. If you do not find any loose connections and the 48 VDC power source is good, replace the fan.

Troubleshooting for phase errors in choppers

Diagnostic codes 752, 753, 754

Diagnostic codes 752 – 754 occur when there is a 3-phase error in a chopper.

Symptoms

Code	Symptoms	XPR models	XPR action	Code cancels with...
752	There is a 3-phase error in Chopper 1.	All models	Shut down	Remote on-off
753	There is a 3-phase error in Chopper 2.	XPR300, XPR460		
754	There is a 3-phase error in Chopper 3.	XPR460		

Corrective action

1. Make sure that the input-line voltage is ±14% of nominal.

   Refer to General input power requirements on page 44.
2. Remove the power from the cutting system.
3. Remove the cover from the contactor.
4. Examine the contacts for excess wear, and replace the contactor if necessary.
5. Examine the following contactor components for loose connections:
   a. Contactor
   b. Input to chopper
   c. Power cord
6. Examine the phase conductors to the choppers for loose connections.
7. Tighten loose connections if found.
8. If you cannot find or correct the problem, speak to your cutting machine supplier or regional Hypertherm Technical Service team.

Troubleshooting for gas inlet pressure faults

Diagnostic codes 768 – 771

Diagnostic codes 768 – 771 occur when gas inlet pressure is less than the permitted pressure level.

Use extreme caution if you do diagnosis or maintenance tasks when the plasma power supply is connected to electricity and the panels on the plasma power supply are removed.

Decreases in gas pressure are more likely to occur if the supply gas hoses are long. For more information, refer to:

- System configuration with Core gas connect console on page 87
- System configuration with CorePlus gas connect console on page 89
- System configuration with VWI or OptiMix gas connect console on page 90

Symptoms

Code	Symptoms	XPR models	XPR action	Code cancels with...
768	Line A O_2 inlet pressure (P2) is less than 5.52 bar (80 psi) or more than 9.31 bar (135 psi).	All models	None	▪ Set process ▪ Remote on-off
769	Line B Argon inlet pressure (P1) is less than 5.52 bar (80 psi) or more than 9.31 bar (135 psi).			
770	Line B N_2 inlet pressure (P1) is less than 5.52 bar (80 psi) or more than 9.31 bar (135 psi).			
771	Line A Air inlet pressure (P2) is less than 5.52 bar (80 psi) or more than 9.31 bar (135 psi).			

Corrective action

1. Use the CNC or XPR web interface to select **Test Cutflow** to start the gas flow.
2. Make sure that the gas inlet pressures are in the permitted range.

   Refer to Process-gas requirements for all gas connect consoles on page 48.
3. If the gas inlet pressure is not in the permitted range, adjust it.
   a. Use a 2-stage regulator that can supply the necessary gas flow and can keep consistent gas pressure with high-pressure gas cylinders.
   b. Look at the diagnostic code history for pressure-related codes that can identify where to look for flow or pressure problems.

c. If you identify a code for a pressure transducer (P1 or P2), interchange the transducers.

d. Identify if the diagnostic code aligns with the transducer change.

e. Replace the bad transducer if necessary.

For instructions, refer to *Replace a pressure transducer* in the *XPR Replacement Parts Procedures Field Service Bulletin (809970)*.

4. If your cutting system has an OptiMix gas connect console, refer to Troubleshooting for process-gas inlet pressure faults in the TorchConnect console for OptiMix systems on page 363.

5. If you cannot find or correct the problem, speak to your cutting machine supplier or regional Hypertherm Technical Service team.

Troubleshooting for high or low chopper voltage

Diagnostic codes 779, 780, 781

Diagnostic codes 779 – 781 occur when the chopper voltage is not in the permitted voltage range.

Symptoms

Code	Symptoms	XPR models	XPR action	Code cancels with...
779	The Chopper 1 15 V bus is out of range (less than 13 V or more than 17 V).	All models	End of cycle	▪ Start ▪ Set process ▪ Remote on-off
780	The Chopper 2 15 V bus is out of range (less than 13 V or more than 17 V).	XPR300, XPR460		
781	The Chopper 3 15 V bus is out of range (less than 13 V or more than 17 V).	XPR460		

Corrective action

1. Examine the 24 VDC on connector J2, pin 1 and pin 2 for the chopper that gives the diagnostic code.
2. If there is no 24 VDC, examine the J2 wiring on the chopper.
3. Tighten loose connections, if found.
4. If you measure 24 VDC, replace the chopper assembly.

Troubleshooting for high voltage on the 24 V power supply

Diagnostic code 784

Diagnostic code 784 occurs when the voltage on the 24 V internal power supply component is too high.

Symptoms

Code	Symptoms	XPR models	XPR action	Code cancels with...
784	The 24 VDC bus is more than 28 V.	All models	Ramp down	None

Corrective action

1. Remove the control-side panel from the plasma power supply to get access to the 24 VDC power supply component.
2. Use a digital multimeter to measure for 24 VDC (±2 VDC) across the positive (+) and negative (-) terminals of the power source.
3. If the voltage is more than or less than the ±2 VDC limit, replace the 24 VDC power supply.
4. If there is 24 VDC (±2 VDC) across the positive (+) and negative (-) terminals of the power supply and the 784 diagnostic code continues, look for 24 VDC (±2 VDC) on the control PCB, J1 pin 1 and pin 3.
5. If there is no voltage on J1 pin 1 and pin 3, examine the red and white wires.
6. If the wires are good, replace the control PCB in the plasma power supply.

Troubleshooting for fieldbus communication faults

Diagnostic code 789

Diagnostic code 789 occurs when there is an error during communication with the fieldbus module. There are different smart-fault data values that you can get with a 789 code. The troubleshooting steps can be different for the different values. When you get a 789 code, make sure that you identify the smart-fault value before you start the troubleshooting steps.

Symptoms

Code	Symptoms	XPR models	XPR action	Code cancels with...
789	The fieldbus module has a communication error. You can see these smart-fault data values with the 789 code: ▪ 1: Process Data Object (PDO) read ▪ 2: Start on noise ▪ 3: Start off noise ▪ 4: Hold on noise ▪ 5: Hold off noise ▪ 6: Pierce on noise ▪ 7: Pierce off noise ▪ 8: Serial Peripheral Interface (SPI) communication timeout	All models	None	▪ Start ▪ Set process ▪ Remote on-off

1: PDO read

An error occurred reading data from a PDO.

- Make sure that the CNC is doing updates on EtherCAT at regular intervals.

2: Start on noise

The EtherCAT start signal was on for less than 15 milliseconds.

- Make sure that the CNC is not setting the EtherCAT start signal to ON for less than 15 milliseconds.

3: Start off noise

The EtherCAT start signal was off for less than 15 milliseconds.

- Make sure that the CNC is not setting the EtherCAT start signal to OFF for less than 15 milliseconds.

4: Hold on noise

The EtherCAT hold signal was on for less than 15 milliseconds.

- Make sure that the CNC is not setting the EtherCAT hold signal to ON for less than 15 milliseconds.

5: Hold off noise

The EtherCAT hold signal was off for less than 15 milliseconds.

- Make sure that the CNC is not setting the EtherCAT hold signal to OFF for less than 15 milliseconds.

6: Pierce on noise

The EtherCAT pierce signal was on for less than 15 milliseconds.

- Make sure that the CNC is not setting the EtherCAT pierce signal to ON for less than 15 milliseconds.

7: Pierce off noise

The EtherCAT pierce signal was off for less than 15 milliseconds.

- Make sure that the CNC is not setting the EtherCAT pierce signal to OFF for less than 15 milliseconds.

8: SPI communication timeout

An SPI timeout occurred with the fieldbus module.

- Make sure that you have the most recent version of the software for the fieldbus module.

PCB information

Plasma power supply power distribution PCB (141425) diagram

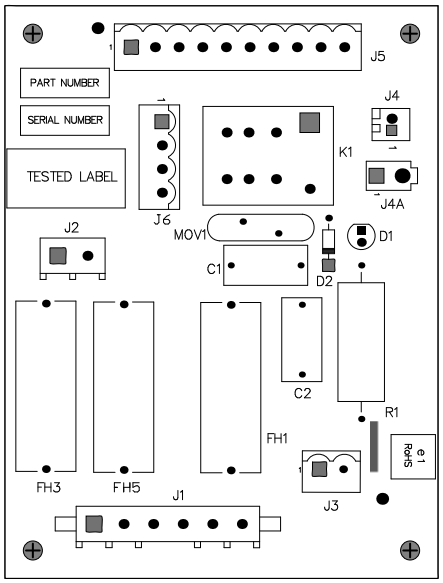

LED	Signal
D1	120 VAC

Plasma power supply control PCB (141545) diagram

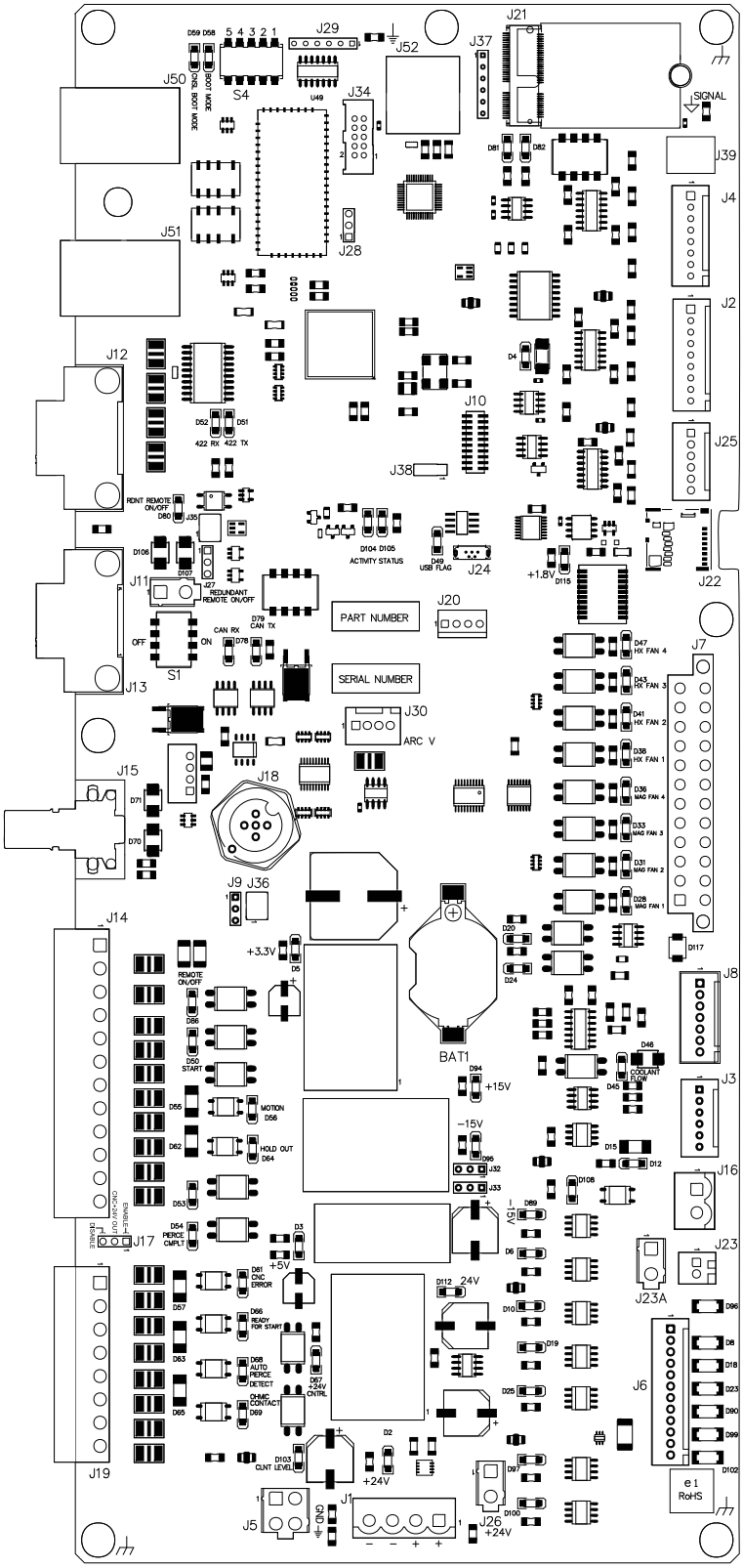

LED	Signal	LED	Signal
D82	WiFi RX	D50	PLASMA START
D81	WiFi TX	D56	MOTION
D80	REDUNDANT REMOTE ON/OFF	D64	COMMAND HOLD
D52	RS-422 RX	D53	HOLD IN
D51	RS-422 TX	D54	PIERCE COMPLETE
D4	A3.3 V	D61	CNC ERROR
D49	USB FLAG	D66	READY FOR START
D104	ACTIVITY	D67	ECO MODE (DC power enable for I/O PCB, start circuit PCB, and choppers)
D105	STATUS	D68	FOR FUTURE USE
D78	CAN RX	D69	OHMIC CONTACT OUTPUT
D79	CAN TX	D108	PILOT ARC ENABLE
D28	MAGFAN 1 FEEDBACK	D89	REMOTE ON-OFF RELAY ENABLE
D31	MAGFAN 2 FEEDBACK	D6	PILOT ARC RELAY
D33	CAB FAN 1 FEEDBACK (XPR460)	D10	48 V CONTROL
D36	MAGFAN 3 FEEDBACK (XPR460)	D19	MAIN CONTACTOR
D38	HXFAN 1 FEEDBACK (XPR170/XPR300)	D25	INRUSH CONTACTOR
D41	HXFAN 2 FEEDBACK (XPR300)	D97	COOLANT SOLENOID (XPR170/XPR300)
D43	CTRLFAN 1 FEEDBACK (XPR170/XPR300)	D100	COOLER PUMP ENABLE (XPR170/XPR300) or COOLER ENABLE (XPR460)
D47	CTRLFAN 2 FEEDBACK (XPR170/XPR300)	D103	COOLANT LEVEL (XPR170/XPR300)
D5	+3.3 V	D94	+15 V
D20	MAGNETICS FANS ENABLE	D95	-15 V
D86	REMOTE ON-OFF	D3	+5 V
D2	+24 V		

DIP switch positions

These DIP switch position details are for the control PCB in the plasma power supply.

DIP switch 1 positions			
1	RS-422 RX termination	–	Default is OFF
2	RS-422 TX termination	–	Default is OFF
3	Not used	–	Default is OFF
4	CAN termination resistor	▪ ON = 121 ohms (Ω) ▪ OFF = Open	Default is OFF

DIP switch 2 positions			
1	Micro-controller DFU programming mode	▪ ON = DFU ▪ OFF = Run	Default is OFF
2	3.3 V logic power	▪ ON = USB OTG ▪ OFF = Internal power supply	Default is OFF
3	RS-422 Serial ID0	–	Default is OFF
4	RS-422 Serial ID1	–	Default is OFF

DIP switch 3 positions			
1	Wireless module programming	▪ ON = Enabled ▪ OFF = Disabled	Default is OFF
2	Wireless module transmit	▪ ON = From micro-controller ▪ OFF = Disabled (must be OFF for J20 programming)	Default is ON
3	Wireless module transmit	▪ ON = From J20 programming connector ▪ OFF = Disabled (must be OFF for usual operation)	Default is OFF
4	Wireless enabled	▪ ON = Wireless disabled ▪ OFF = Wireless enabled	Default is OFF

DIP switch 4 positions			
1	Alternate boot mode	–	Default is OFF
2	Console boot mode	–	Default is OFF
3	EtherCAT	▪ Switch 3 = OFF ▪ Switch 4 = OFF ▪ Switch 5 = OFF	Default is OFF
4	Reserved (future use)	▪ Switch 3 = ON ▪ Switch 4 = OFF ▪ Switch 5 = OFF	Default is OFF
5	Reserved (future use)	▪ Switch 3 = OFF ▪ Switch 4 = ON ▪ Switch 5 = OFF	Default is OFF

Redundant remote on-off is set to disabled (OFF) by default, with a jumper across pin 1 and pin 2 of the J27 connector. For more information, refer to Pinouts for the discrete cable for the expansion PCB on page 161 and Install a redundant remote on-off switch on page 215.

Plasma power supply chopper PCB (10085242) diagram

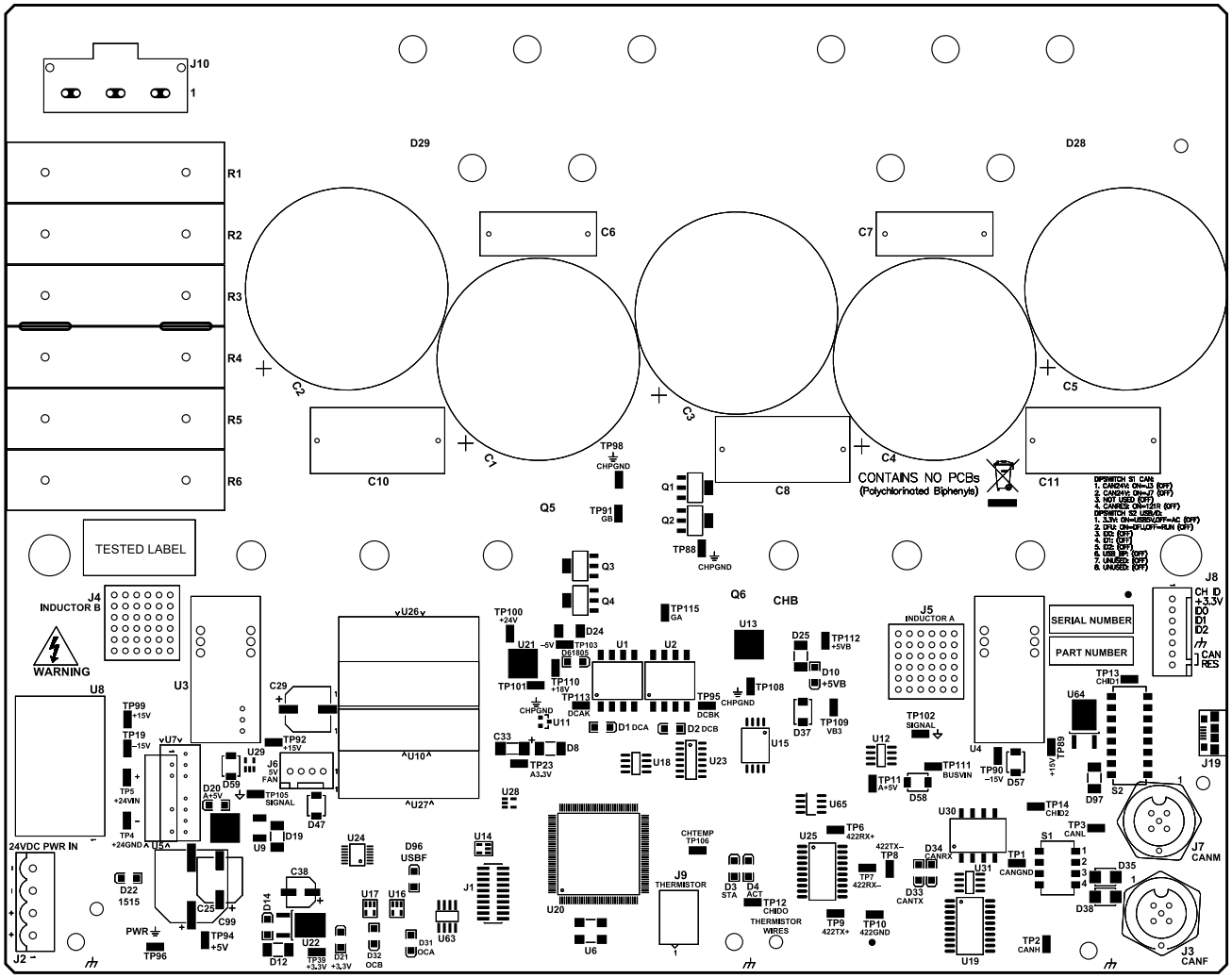

LED	Signal	LED	Signal
D22	+15V AND -15V POWER	D1	DCA
D14	+5 V	D2	DCB
D21	+3.3 V	D3	STATUS
D32	OVER CURRENT CHANNEL B	D4	ACTIVITY
D31	OVER CURRENT CHANNEL A	D10	+5VB
D96	USB FLAG	D33	CAN TX
D6	+18V AND -5V POWER	D34	CAN RX
D20	+5VA		

Plasma power supply start circuit PCB (141360) diagram

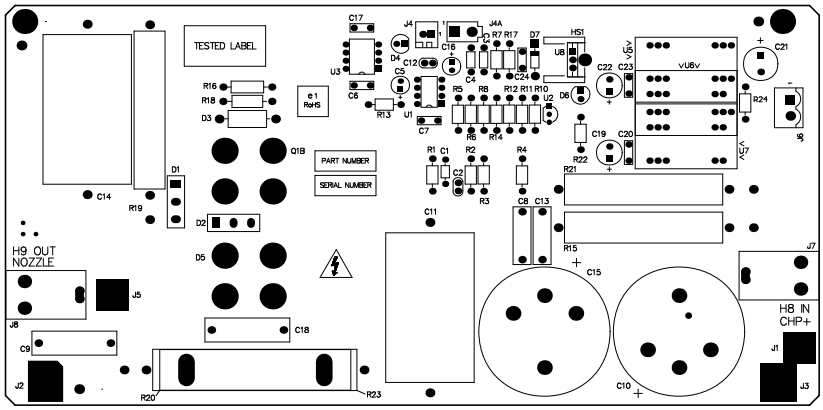

LED	Signal
D4	PILOT ARC ENABLE
D6	+18V AND -5V POWER

Plasma power supply I/O PCB (10081573) diagram

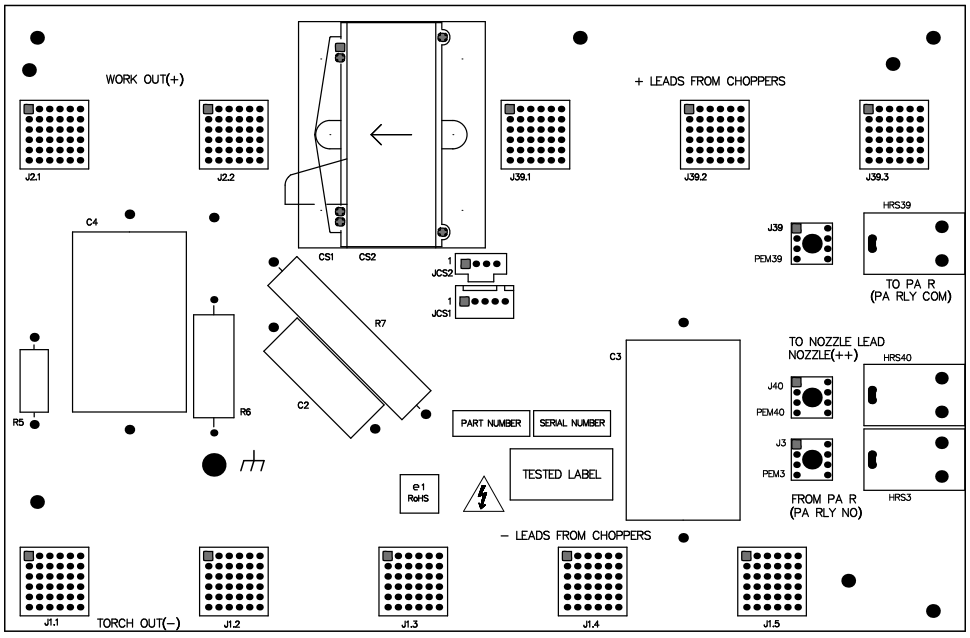

Fan power distribution PCB (141384) diagram

The fan power distribution PCB is used in the plasma power supply. For the XPR460, this PCB is also used in the cooler.

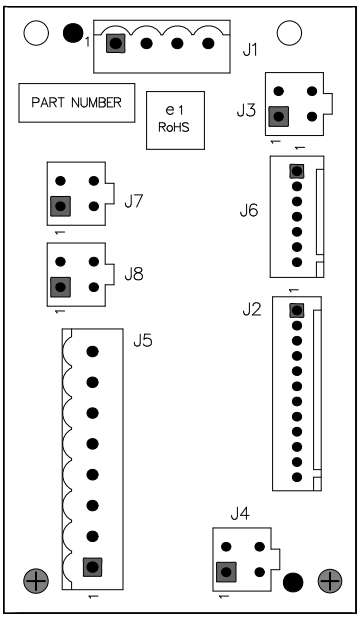

Gas connect console control PCB (141375) diagram

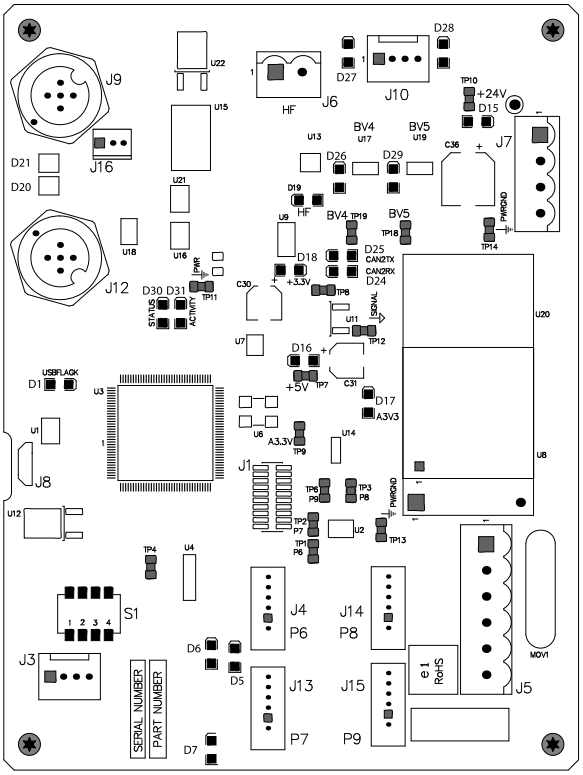

LED	Signal	LED	Signal
D15	+24 V	D24	CAN RX
D29	B5	D30	STATUS
D26	B4	D31	ACTIVITY
D19	HF	D1	USB FLAG
D18	+3.3 V	D16	+5 V
D25	CAN TX	D17	A3.3

Gas connect console high frequency PCB (141563) diagram

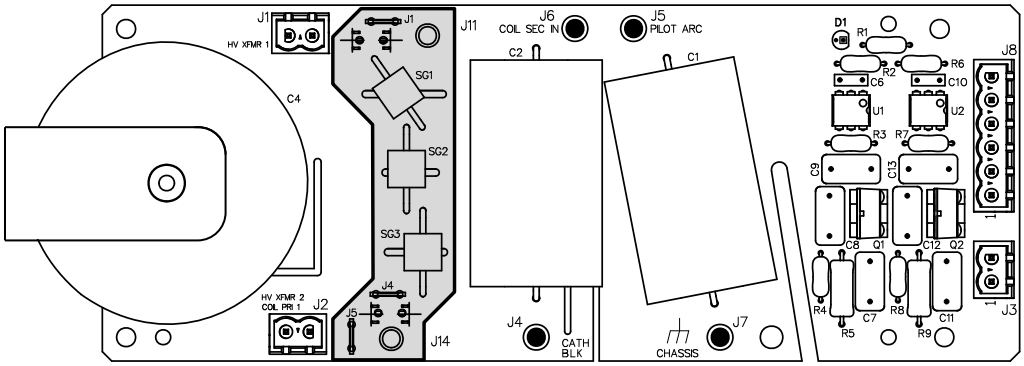

LED	Signal
D1	HIGH FREQUENCY ENABLE

Torch connect console ohmic PCB (141368) diagram

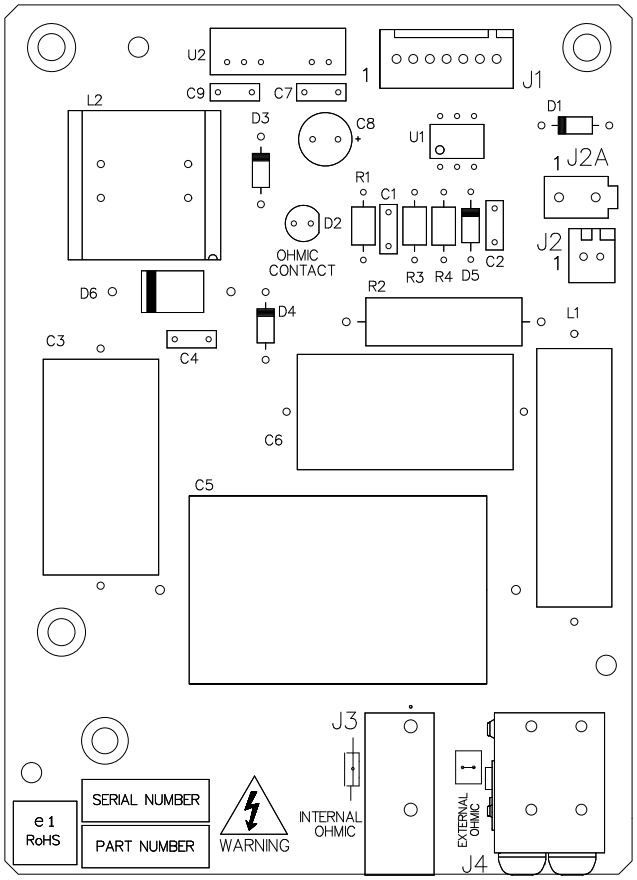

LED	Signal
D2	Ohmic contact

Torch connect console control PCB (141334) diagram

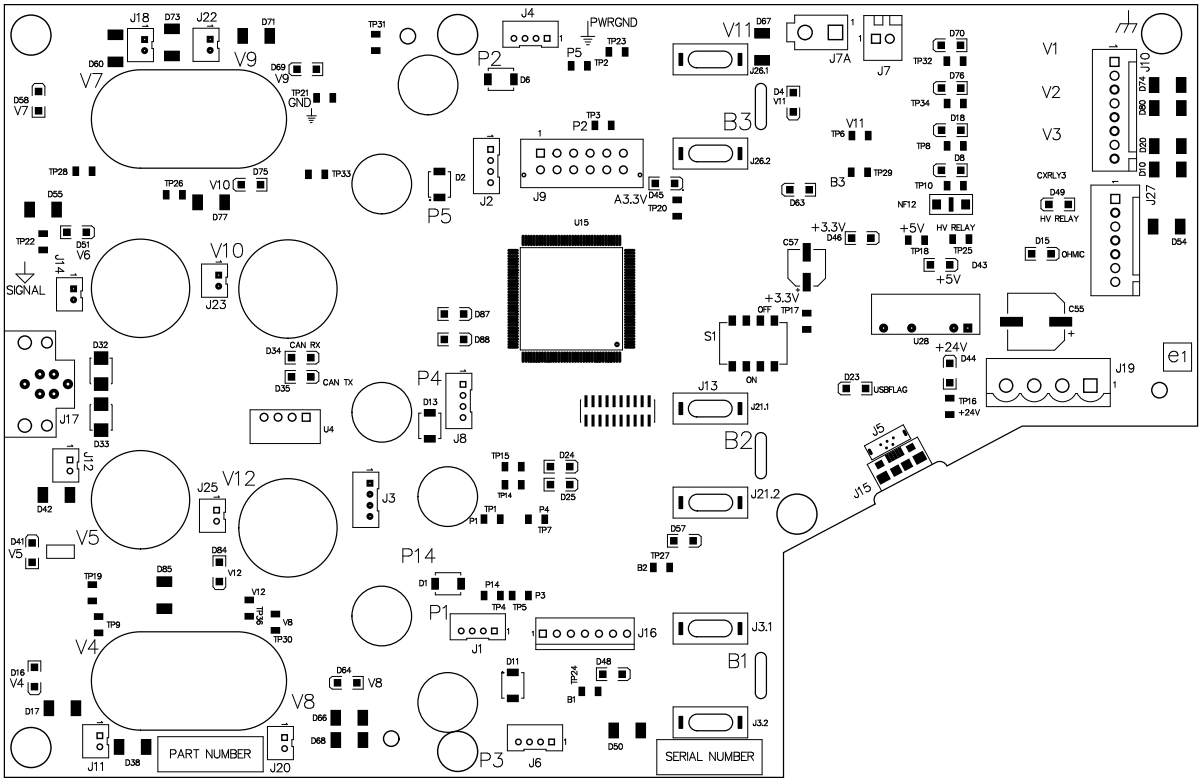

LED	Signal	LED	Signal
D58	V7	D87	STATUS LED
D69	V9	D88	ACTIVITY LED
D75	V10	D45	A3.3 V
D51	V6	D4	V11
D41	V5	D63	B3
D84	V12	D46	+3.3 V
D16	V4	D23	USB FLAG
D64	V8	D43	+5 V
D34	CAN RX	D44	+24 V
D35	CAN TX	D70	V1 TORCH VALVE
D48	B1	D49	HV RELAY
D57	B2	D15	OHMIC CONTACT

9 Parts List

Plasma power supply parts

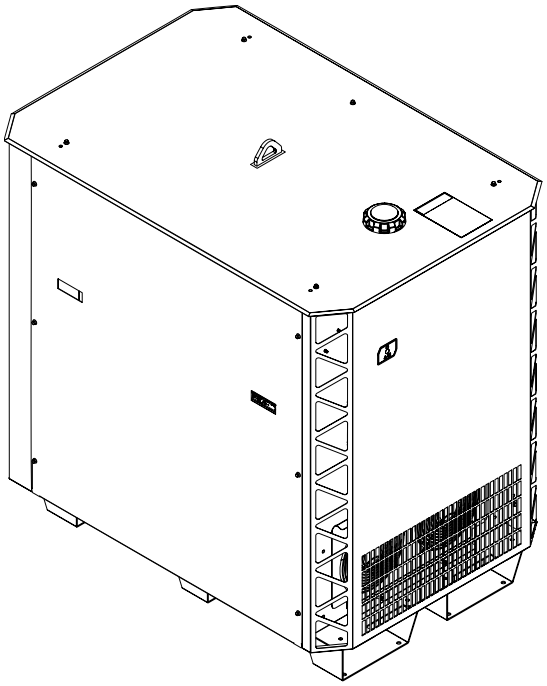

Part number	Voltage (VAC)
078640	200
078641	208
078642	220
078643	240
078644	380

Part number	Voltage (VAC)
078645	400
078646	415
078647	440
078648	480
078649	600

Outer panel parts

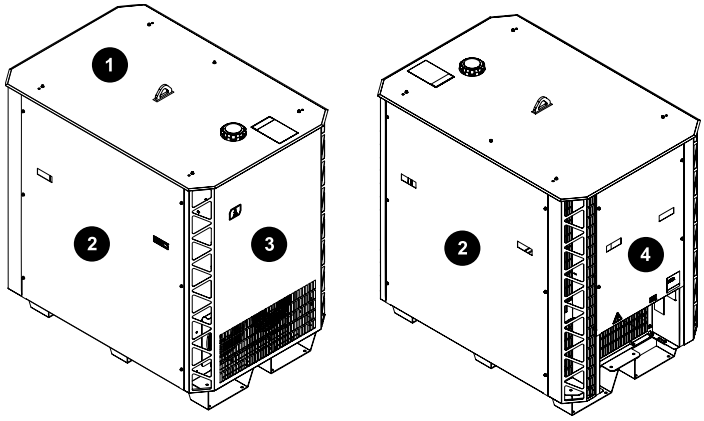

	Part number	Description	Quantity
1	10087259 [1]	Top panel with labels	1
	428728 [2]		
2	10087257 [1]	Side panel with labels and handles	2
	428838 [2]		
3	10087256 [1]	Front panel with "H" (not shown) and power-indicator LED label	1
	428725 [2]		
4	10087258 [1]	Rear panel with label and handles	1
	428726 [2]		
	10086625 [2]	Base (not shown)	1

1 Compatible only on systems with a serial number equal to or after XPR170-010000.

2 Compatible only on systems with a serial number before XPR170-010000.

Fans

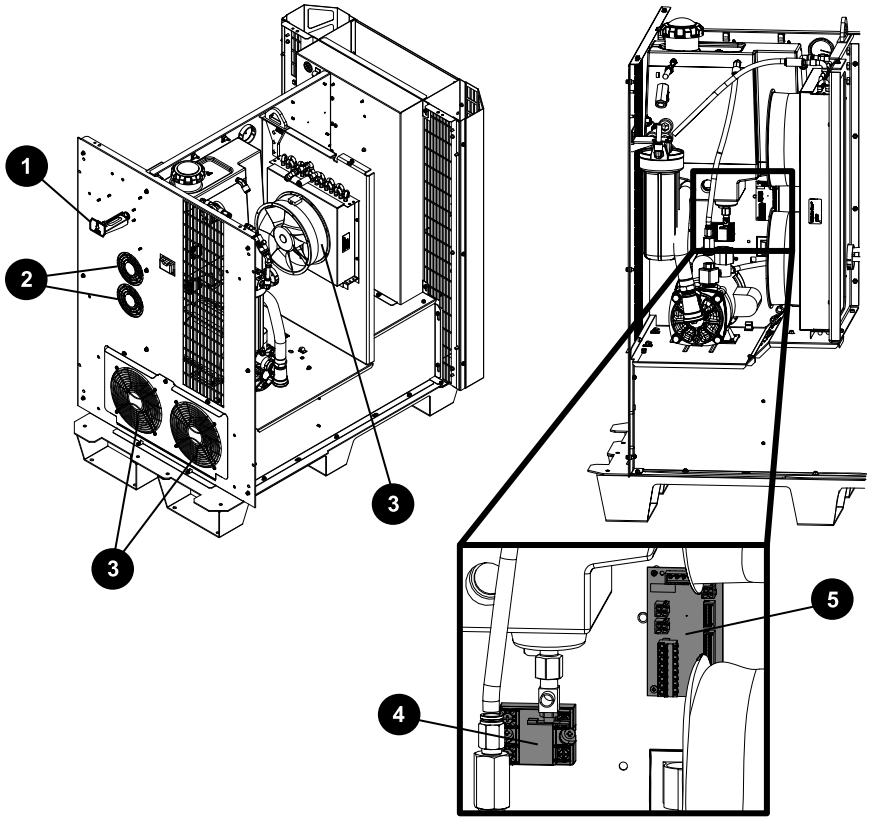

	Part number	Description	Designator	Quantity
1	429002	Power-indicator LED	–	1
2	229821	Fan: 250 cfm, 48 VDC, 120 mm (4.72 inch) diameter	CTRLFAN 1, CTRLFAN 2	2
3	229822	Fan: 890 cfm, 48 VDC, 254 mm (10 inch) diameter	HXFAN 1, MAGFAN 1, MAGFAN 2	3
4	003266	Solid state relay	–	1
5	141384	Fan power distribution PCB	PCB6	1

Heat exchanger

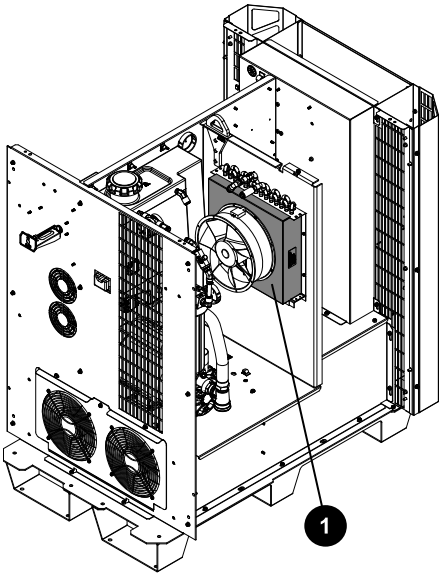

	Part number	Description	Designator	Quantity
1	229924	Heat-exchanger only	–	1

Coolant system parts

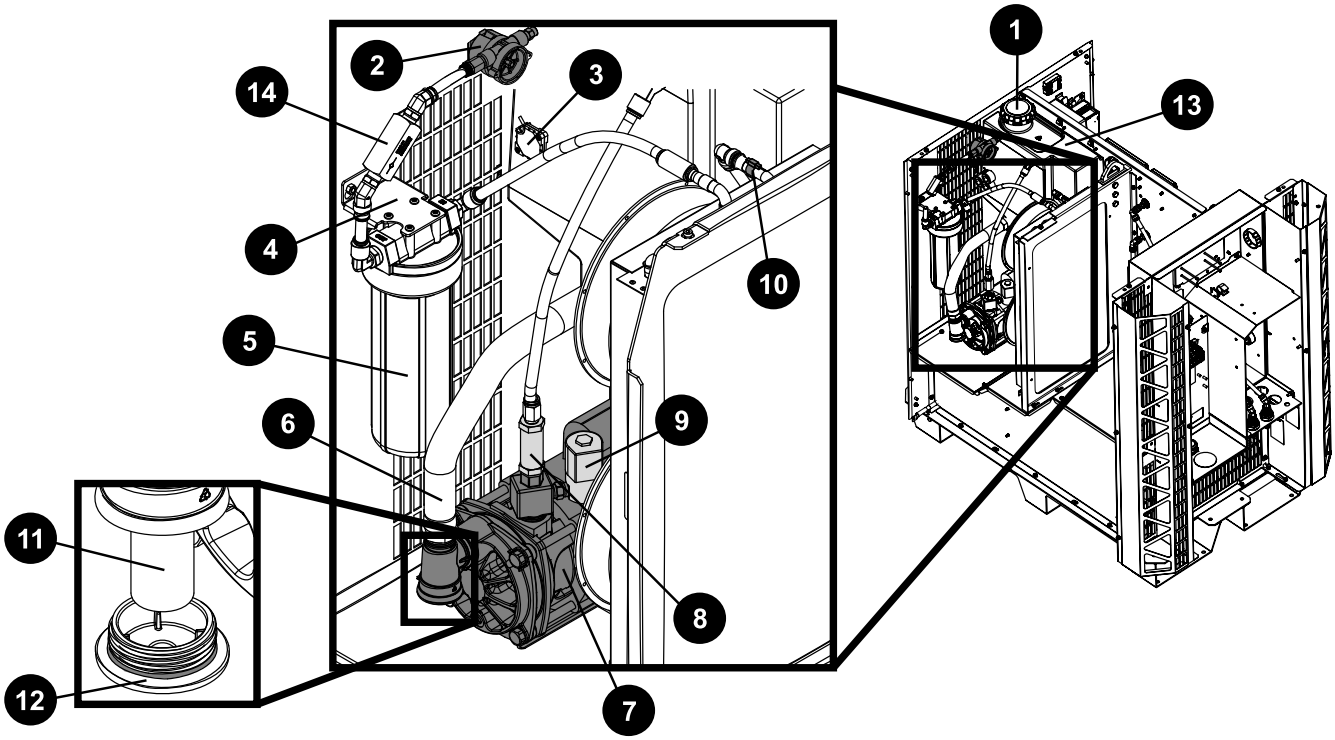

	Part number	Description	Quantity
1	127014	Coolant reservoir cap	1
2	229741	Coolant flow meter	1
3	229775	Coolant level sensor	1
4	101281	Coolant filter bracket	1
5	127344	Coolant filter housing	1
	027005	Coolant filter (fine)	1
6	229777	Coolant hose (1 inch)	1
7	428729	Coolant pump and motor assembly: ▪ Adapter: 1-5/8 inch X 1 inch NPT X #16 JIC ▪ Plug with O-ring ▪ Coolant pump screen (coarse) ▪ Pump and motor ▪ Adapter: 1 inch MNPT X 1 inch MNPT hexagonal collar ▪ Adapter: 1 inch MNPT X 3/8 inch FNPT X 1/4 inch FNPT ▪ Adapter: 3/8 inch hexagonal ▪ Coolant solenoid valve assembly	1
8	006132	Coolant bypass check valve	1
9	229721	Coolant solenoid valve assembly	1
10	229654	Thermistor: Copper pipe clip with electrical connector (hidden behind panel)	1
11	127559	Coolant pump screen (coarse)	1
12	428973	Kit: XPR inlet pump fitting replacement, with O-ring on plug	1
13	002561	Coolant reservoir	1
14	006113	Coolant check valve	1
	428766	Kit: Tubing (1 inch hose not included)	1

Coolant adapters in the rear compartment

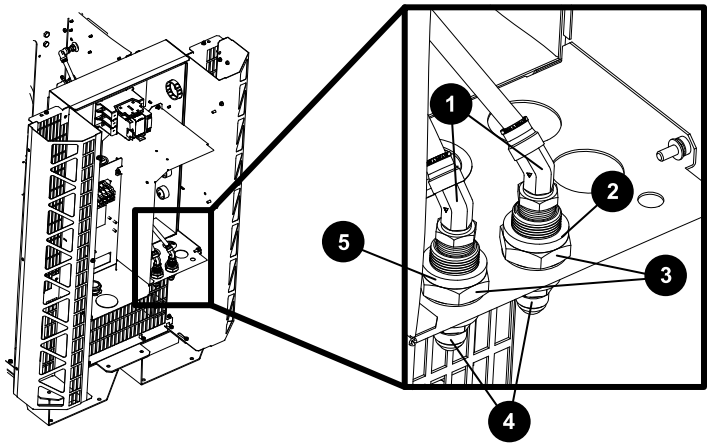

	Part number	Description	Quantity
1	015889	Elbow adapter: 1/2 inch NPT X 1/2 inch tube, 45° swivel	2
2	015903	Red ring: 1.13 inches inner diameter	1
3	015888	Adapter: 1/2 inch FNPT X 1-1/2 inch length bulkhead	2
	015899	Red ring: 0.87 inch inner diameter (not shown)	1
4	015029	Adapter: 1/2 inch NPT X #8 male	2
	015898	Green ring: 0.87 inch inner diameter (not shown)	1
5	015902	Green ring: 1.13 inch inner diameter	1

Other adapters not shown

Part number	Description	Location	Quantity
015669	Male adapter: 3/8 inch NPT X 1/2 inch tube	in coolant solenoid valve	1
006099	Coolant drain valve: 1/4 inch NPT X 3/8 inch tube	in the bottom of the coolant reservoir	1
015073	Adapter: 1/4 inch NPT X 1/4 FPT	in the bottom of the coolant reservoir	1
015738	Elbow adapter: 1/4 inch NPT X 1/2 inch tube, 45° swivel	in the top of the coolant reservoir	1
015510	Adapter: 1/4 inch X hexagonal collar	between the flow meter and coolant reservoir	1
015663	Adapter: 1/4 inch NPT X 1/2 inch tube	in the flow meter and coolant bypass check valve	2

Part number	Description	Location	Quantity
015668	Elbow adapter: 1/2 inch NPT X 1/2 inch tube, 90°	in the coolant filter (fine) assembly	2
104807	Nut for chopper fitting	on the back of the chopper	2
015815	Elbow fitting: 1/2 inch tube X 1/2 inch tube, 90°	on the back of the chopper and the heat-exchanger inlet	3
015820	Fitting: 1/2 inch tube X 1/2 inch tube	heat-exchanger outlet	1

Transformers and inductors

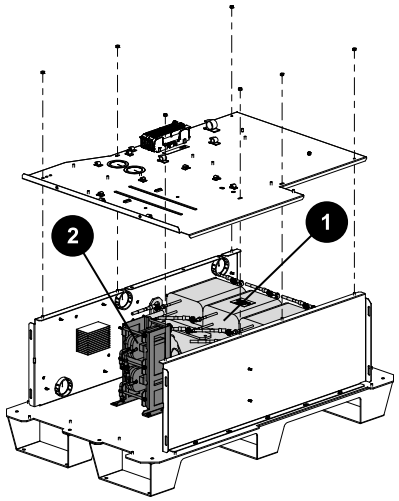

	Part number	Description	Designator	Quantity
1	–	Transformer, horizontal, 35.7 kW, 3-phase [1]	T2	1
2	428844	Kit: Inductor 1A (top)/1B (bottom)	L1	1

1 You cannot purchase this part. Shown for reference only.

Control side – view 1

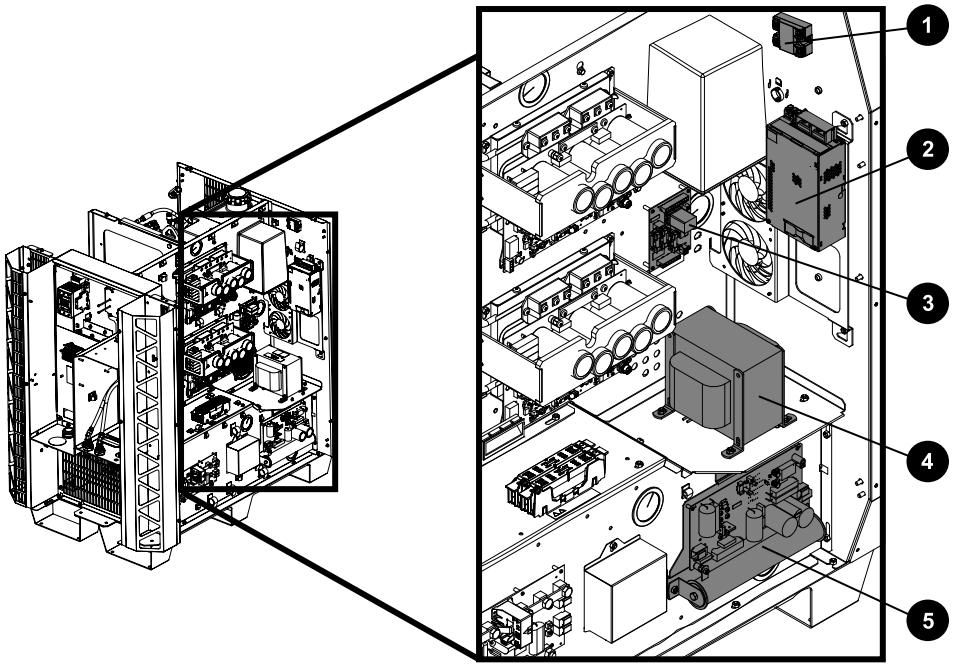

	Part number	Description	Designator	Quantity
1	003266	Solid state relay	–	1
2	229671	Power source: 88 VAC - 264 VAC to 48 VDC, 600 W	PS2	1
3	428893	Power distribution PCB	PCB7	1
	10084820	Fuse: 15 A, 250 VAC, time delay (on PCB7)	F1, F2	2
	108709	Fuse: 10 A, 250 VAC, time delay (on PCB7)	F3	1

	Part number	Description	Designator	Quantity
4	Control transformer assembly, 3 kVA			
	229809	200 V, 50 Hz – 60 Hz	T1	1
	229810	208 V, 60 Hz		
	229811	220 V, 50 Hz – 60 Hz		
	229812	240 V, 60 Hz		
	229813	380 V, 50 Hz		
	229814	400 V, 50 Hz		
	229815	415 V, 50 Hz		
	229816	440 V, 50 Hz – 60 Hz		
	229794	480 V, 60 Hz		
	229817	600 V, 60 Hz		
5	229678	Start circuit assembly	PCB4	1

Control side – view 2

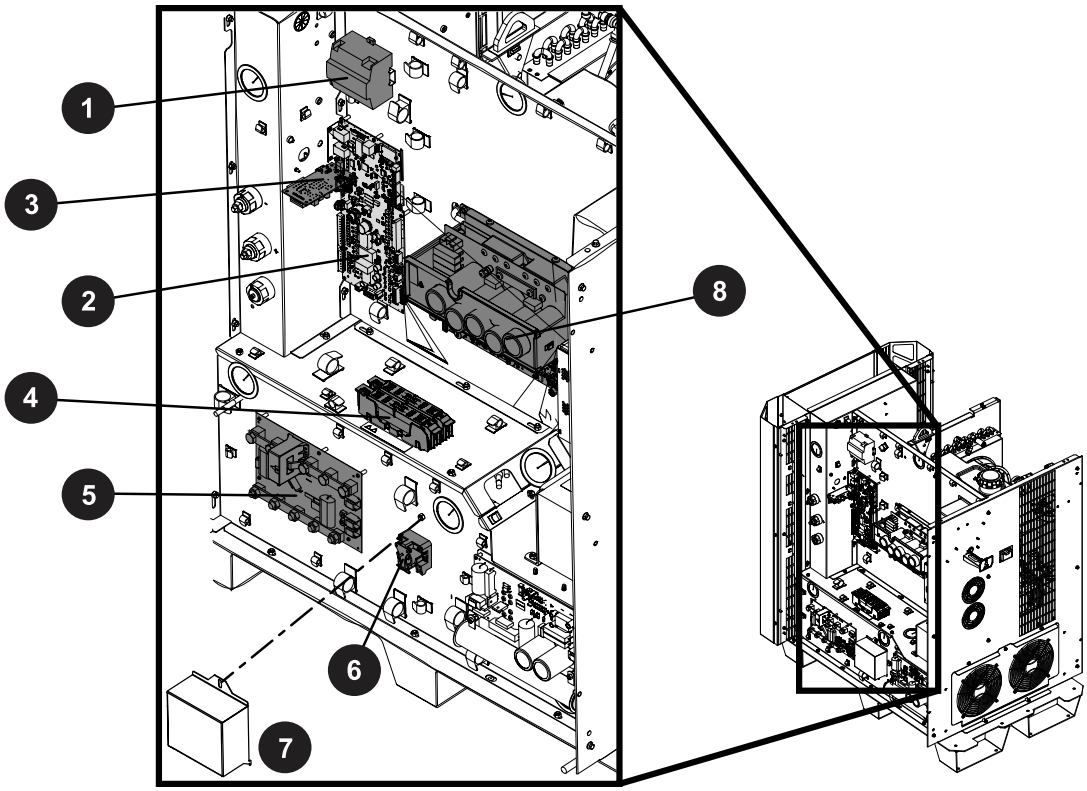

	Part number	Description	Designator	Quantity
1	229640	Power source: 88 VAC – 264 VAC to 24 VDC	PS1	1
2	10084334	Kit: XPR main control PCB assembly and wireless tag	PCB1	1
	10088158	Kit: Wireless (Wi-Fi) module for main control PCB and wireless tag (not shown)	U83	1
3	141597	Plasma power supply expansion PCB	PCB9	1
4	208394	Fuse holder: 2P, 30 A, 600 V	–	1
	208395	Fuse: 8 A, 600 V, Class R (used in 380 V, 400 V, 415 V, 440 V, 480 V, 600 V)	F1, F2	2
	208397	Fuse: 15 A, 600 V, Class R (used in 200 V, 208 V, 220 V, 240 V)		
5	10081573	I/O PCB	PCB5	1
6	003277	Pilot arc relay: 24 VDC, coil, 60 A 28 VDC contacts	CR1	1
7	101316	Pilot arc relay cover	–	1
8	10085251	Chopper assembly	Chopper 1	1

Wire harnesses and CAN cables in plasma power supply

Part number	Description
528135	Wire harnesses for the XPR170: ▪ Primary wire harness for the plasma power supply ▪ Wire harness to the 48 V power source in the plasma power supply when a solid state relay is present ▪ Wire harness to the 48 V power source in the plasma power supply when no solid state relay is present
10081204	Wire harness for the fan power distribution PCB
223400	CAN cable 1 m (3.3 ft) Located between the control PCB and chopper.

Rear compartment of the plasma power supply

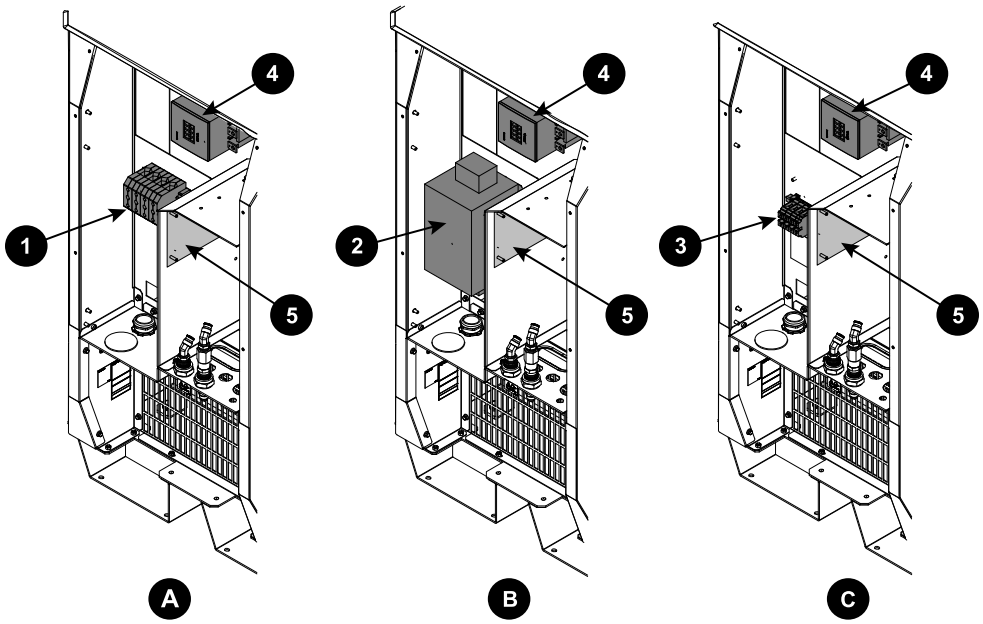

A 200 V, 208 V, 220 V, 240 V plasma power supplies

B 400 V, 415 V CE plasma power supplies

C 380 V, 440 V, 480 V, 600 V plasma power supplies

	Part number	Description	Designator	Quantity
1	229033	Terminal block 600 V, 200 A (380 V, 400 V, 415 V, 440 V, 480 V, 600 V)	TB1	1
2	209453	EMI filter with terminal block (400 V, 415 V CE)		
3	029316	Terminal block 600 V, 140 A (380 V, 440 V, 480 V, 600 V)		
4	003276	Main contactor (200 V, 208 V, 220 V, 240 V)	M_CON	1
	429060	Main contactor assembly (380 V, 400 V, 415 V, 440 V, 480 V, 600 V)		
5	141511	VDC3 PCB (Optional, for use with RS-422 and discrete cutting systems)	–	1
	10080016	Kit: Replacement output terminals for connecting work cables and pilot arc cables in the plasma power supply	–	–

Gas connect console parts

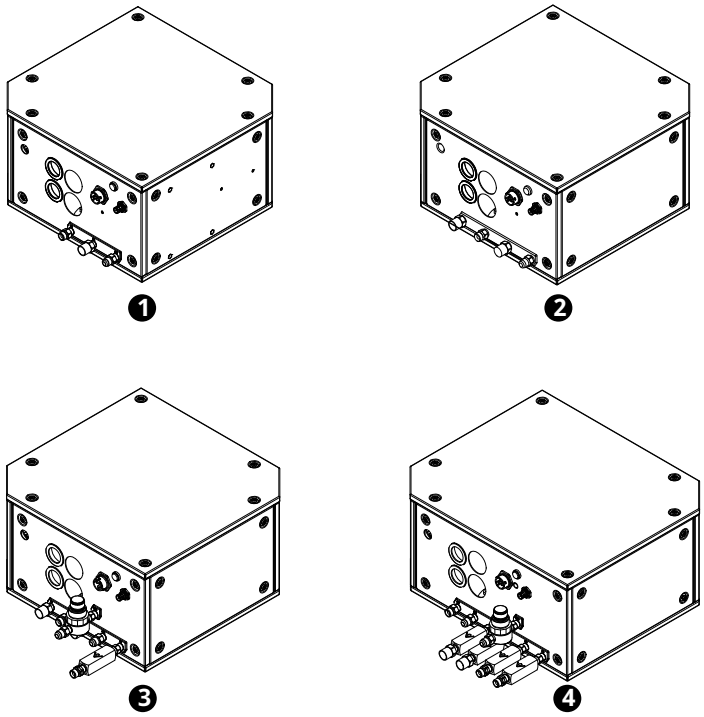

	Part number	Description
1	078631	Core gas connect console
2	078662	CorePlus gas connect console
3	078632	VWI gas connect console
4	078633	OptiMix gas connect console

Gas connect console high-voltage side parts (CorePlus shown)

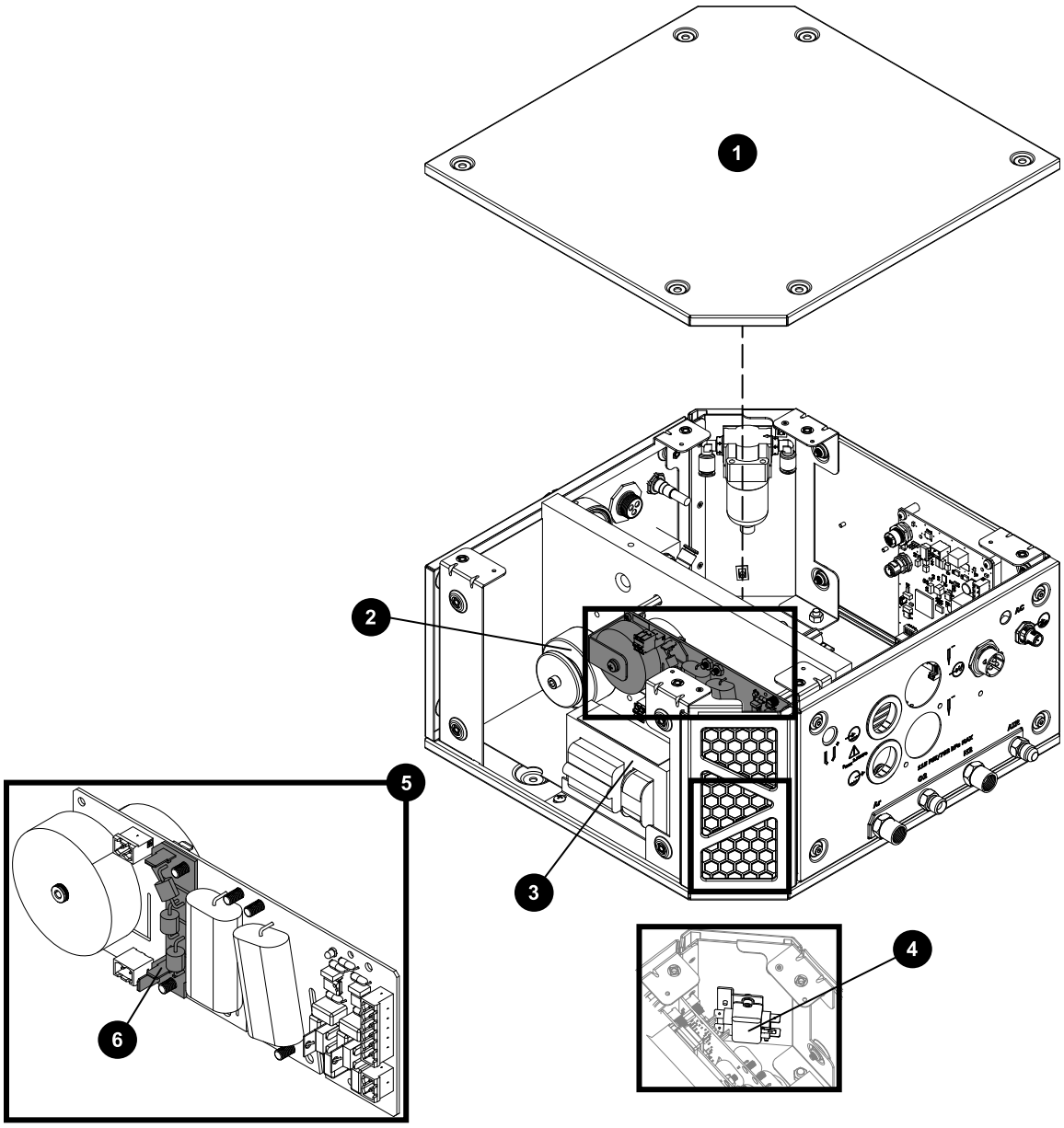

	Part number	Description	Console	Designator	Quantity
1	229930	Top panel with insulator	Core, CorePlus, VWI	–	1
	229929		OptiMix		
2	10079807 [1]	Coil assembly with coil mount	Core, CorePlus, VWI, OptiMix	T2	1
	229837 [2]	Coil assembly (not shown)	Core, VWI, OptiMix		

	Part number	Description	Console	Designator	Quantity
3	229838	High-frequency, high-voltage transformer	Core, CorePlus, VWI, OptiMix	T1	1
4	009045	EMI filter	Core, CorePlus, VWI, OptiMix	–	1
5	141563 [1]	High-frequency, high-voltage ignition PCB	Core, CorePlus, VWI, OptiMix	PCB2	1
	141354 [2]		Core, VWI, OptiMix		
6	141595	Spark gap PCB	Core, CorePlus, VWI, OptiMix	–	1

1 For gas connect consoles with a serial number that is more than 5,000.

2 For gas connect consoles with a serial number that is less than 5,000.

Gas connect console manifold side parts

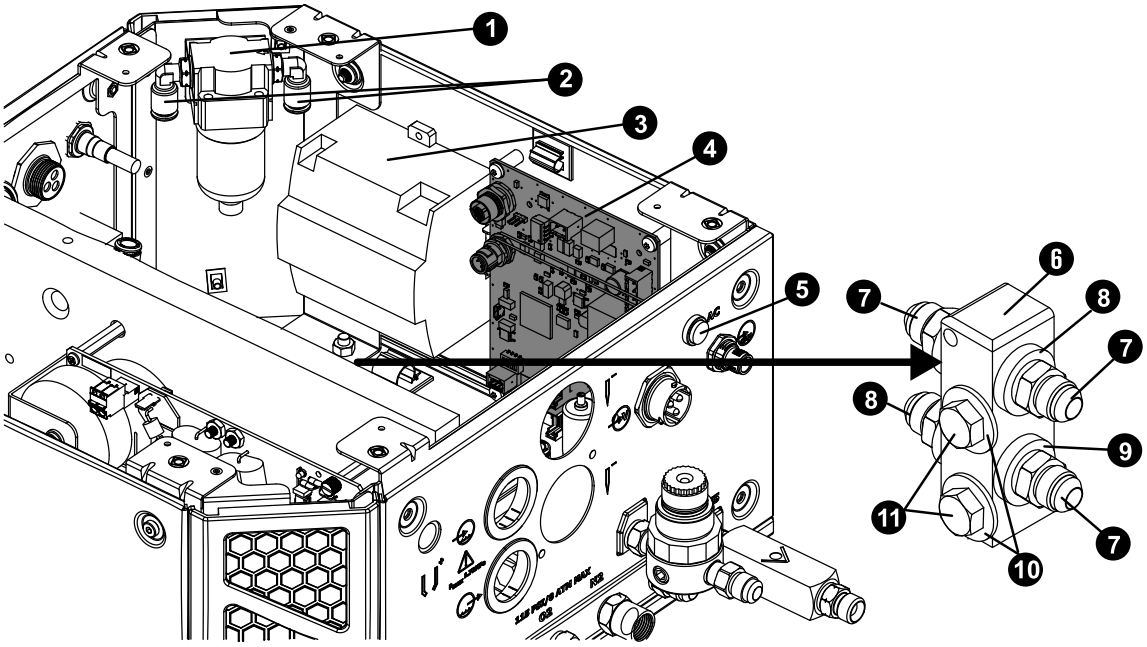

	Part number	Description	Console	Designator	Quantity
1	011151	Air filter assembly	Core, CorePlus, VWI, OptiMix	–	1
	011110	Air filter element	Core, CorePlus, VWI, OptiMix	–	1
2	015853	Male elbow adapter: 1/4 inch NPT X 5/16 inch tube	Core, CorePlus, VWI, OptiMix	–	2
3	229640	Power source: 88 VAC - 264 VAC to 24 VDC	VWI, OptiMix only	–	1
4	141375	Control PCB	Core, CorePlus, VWI, OptiMix	PCB1	1
5	229825	Green power-indicator LED assembly	Core, CorePlus, VWI, OptiMix	–	1
6	104757	Coolant manifold	Core, CorePlus, VWI, OptiMix	–	1
7	015029	Adapter: 1/2 inch NPT X #8 male	Core, CorePlus, VWI, OptiMix	–	4
8	015898	Green ring: 0.87 inches inner diameter	Core, CorePlus, VWI, OptiMix	–	2
9	015899	Red ring: 0.87 inches inner diameter	Core, CorePlus, VWI, OptiMix	–	2
10	075218	Washer	Core, CorePlus, VWI, OptiMix	–	2
11	075140	Bolt	Core, CorePlus, VWI, OptiMix	–	2

Core gas connect console manifolds and adapters

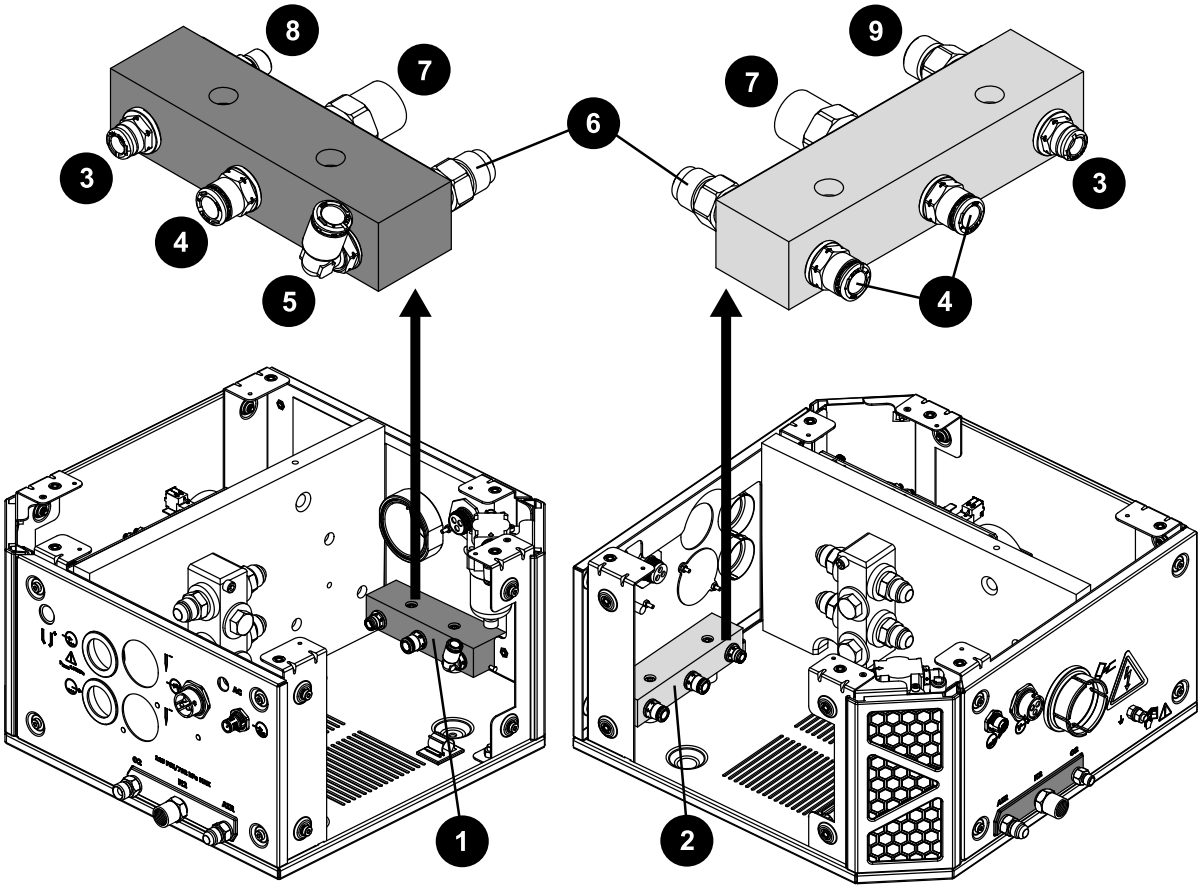

	Part number	Description	Quantity
1	104806	Manifold: Gas output (no adapters)	1
2	104802	Manifold: Gas input (no adapters)	1
Push-to-connect adapters			
3	015876	1/4 inch NPT X 1/4 inch tube	2
4	015811	1/4 inch NPT X 8 mm tube	3
5	015853	Male elbow: 1/4 inch NPT X 5/16 inch tube	1
Threaded adapters with thread sealant applied			
6	10083752	1/4 inch NPT X #6 male with O-ring (air output and input)	2
7	10083762	1/4 inch NPT X RH 'B' inert female with O-ring (nitrogen output and input)	2
8	10083766	1/8 inch NPT X RH 'A' with O-ring (oxygen output)	1
9	10083750	1/4 inch NPT X RH 'B' male with O-ring (oxygen input)	1

CorePlus gas connect console manifolds and adapters

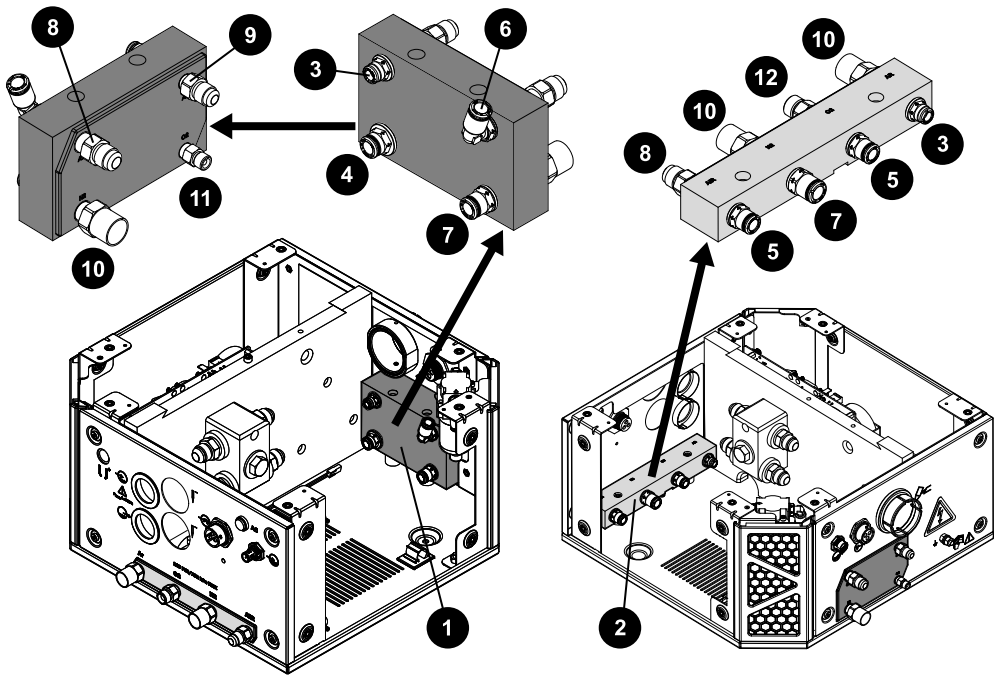

	Part number	Description	Quantity
1	10078917	Manifold: Gas output (no adapters)	1
2	10078916	Manifold: Gas input (no adapters)	1
Push-to-connect adapters			
3	015876	1/4 inch NPT X 1/4 inch tube	2
4	015910	3/8 inch NPT X 5/16 inch tube	1
5	015811	1/4 inch NPT X 8 mm tube	2
6	015909	Male elbow: 1/4 inch NPT X 5/16 inch tube	1
7	015907	1/4 inch NPT X 3/8 inch tube	2
Threaded adapters with thread sealant applied			
8	10083752	1/4 inch NPT X #6 male with O-ring (air output and input)	2
9	10083768	Adapter: 1/8 inch NPT X #5 male with O-ring (argon outlet)	1
10	10083762	1/4 inch NPT X RH 'B' inert female with O-ring (nitrogen output and input)	3
11	10083766	1/8 inch NPT X RH 'A' with O-ring (oxygen output)	1
12	10083750	1/4 inch NPT X RH 'B' male with O-ring (oxygen input)	1

VWI gas connect console input and output manifolds and adapters

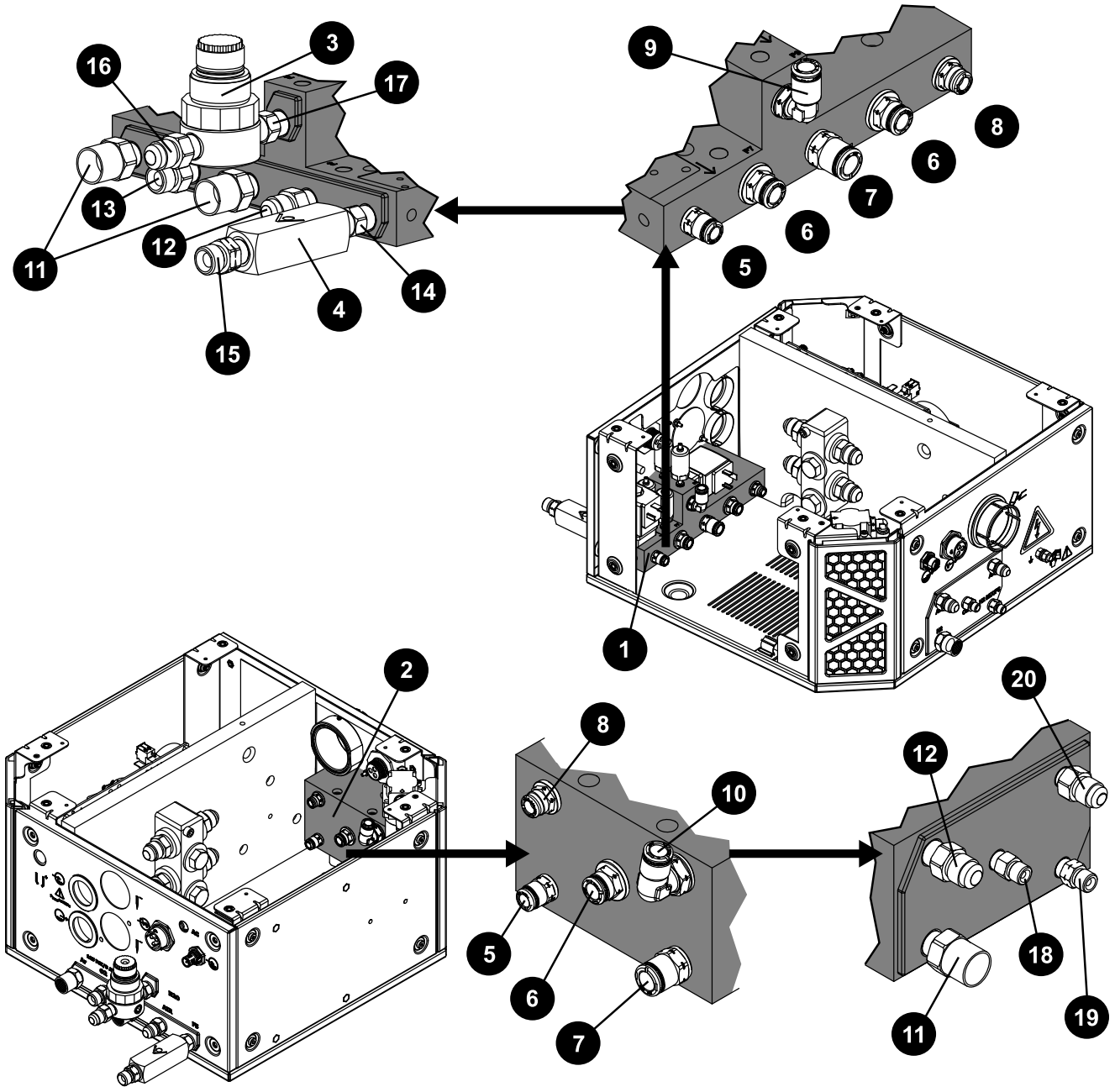

	Part number	Description	Quantity
1	229898	Manifold: Gas input (with adapters)	1
2	104843	Manifold: Gas output (no adapters)	1
3	229844	Water regulator	1

	Part number	Description	Quantity
4	006157	Check valve	1
Push-to-connect adapters			
5	015905	1/8 inch NPT X 1/4 inch tube	2
6	015910	3/8 inch NPT X 5/16 inch tube	2
7	015907	1/4 inch NPT X 3/8 inch tube	1
8	015876	1/4 inch NPT X 1/4 inch tube	1
9	015853	Elbow: 1/4 inch NPT X 5/16 inch tube, 90°	1
10	015909	Elbow: 3/8 inch NPT X 5/16 inch tube, 90°	-
Threaded adapters with thread sealant applied			
11	10083762	1/4 inch NPT X RH 'B' inert female with O-ring	3
12	10083752	1/4 inch NPT X #6 male with O-ring	2
13	10083750	1/4 inch NPT X RH 'B' male with O-ring	1
14	10083806	1/4 inch X hexagonal collar with O-ring	1
15	10083808	1/4 inch NPT X LH 'B' with O-ring	1
16	015012	1/4 inch NPT X #6 male	1
17	10084047	1/4 inch NPT hexagonal collar with O-ring	1
18	10083766	Adapter: 1/8 inch NPT X RH 'A' with O-ring (oxygen outlet)	1
19	10083783	Adapter: 1/8 inch NPT X LH 'A' male with O-ring (hydrogen mix outlet)	1
20	10083768	Adapter: 1/8 inch NPT X #5 male with O-ring (argon outlet)	1

OptiMix gas connect console input and output manifolds and adapters

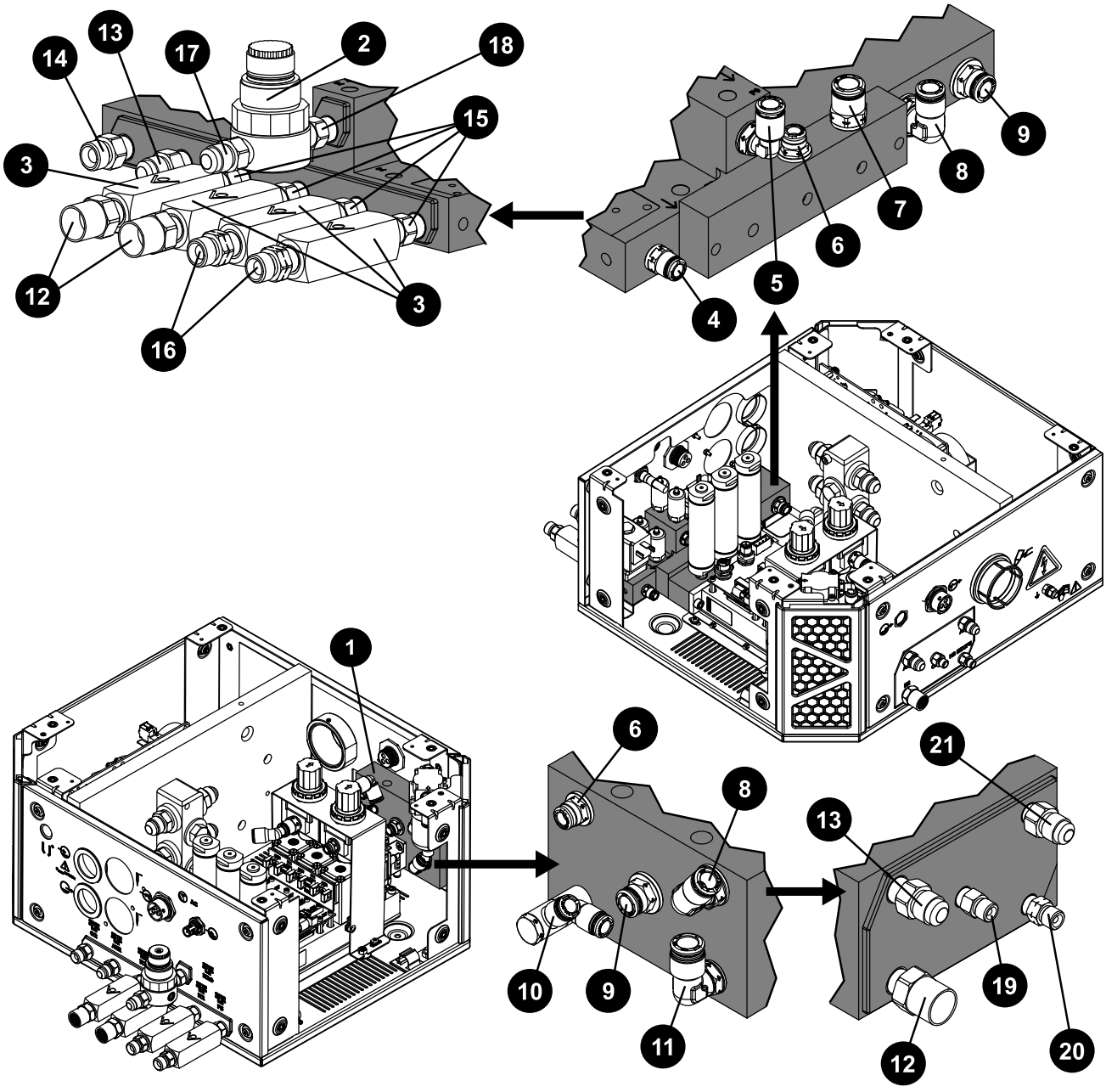

	Part number	Description	Quantity
1	104843	Manifold: Gas output (no adapters)	1
2	229844	Water regulator	1
3	006157	Check valve	4
Push-to-connect adapters			

	Part number	Description	Quantity
4	015905	1/8 inch NPT X 1/4 inch tube	1
5	015853	Elbow: 1/4 inch NPT X 5/16 inch tube	1
6	015876	1/4 inch NPT X 1/4 inch tube	1
7	015907	1/4 inch NPT X 3/8 inch tube	1
8	015909	Elbow: 3/8 inch NPT X 5/16 inch tube	1
9	015910	3/8 inch NPT X 5/16 inch tube	1
10	015906	Dual connection: 1/8 inch NPT X 1/4 inch tube	1
11	015908	Elbow: 1/4 inch NPT X 3/8 inch tube	1
Threaded adapters with thread sealant applied			
12	10083762	1/4 inch NPT X RH 'B' inert female with O-ring	3
13	10083752	1/4 inch NPT X #6 male with O-ring	2
14	10083750	1/4 inch NPT X RH 'B' male with O-ring	1
15	10083806	1/4 inch X hexagonal collar with O-ring	4
16	10083808	1/4 inch NPT X LH 'B' with O-ring	2
17	015012	1/4 inch NPT X #6 male	1
18	10084047	1/4 inch NPT hexagonal collar with O-ring	1
19	10083766	1/8 inch NPT X RH 'A' with O-ring	1
20	10083783	1/8 inch NPT X LH 'A' with O-ring	1
21	10083768	1/8 inch NPT X #5 with O-ring	1

To replace the gas input manifold with adapters in an OptiMix gas connect console, contact your cutting machine supplier or regional Hypertherm Customer Service representative.

VWI and OptiMix gas connect console mixer, transducers, and valves

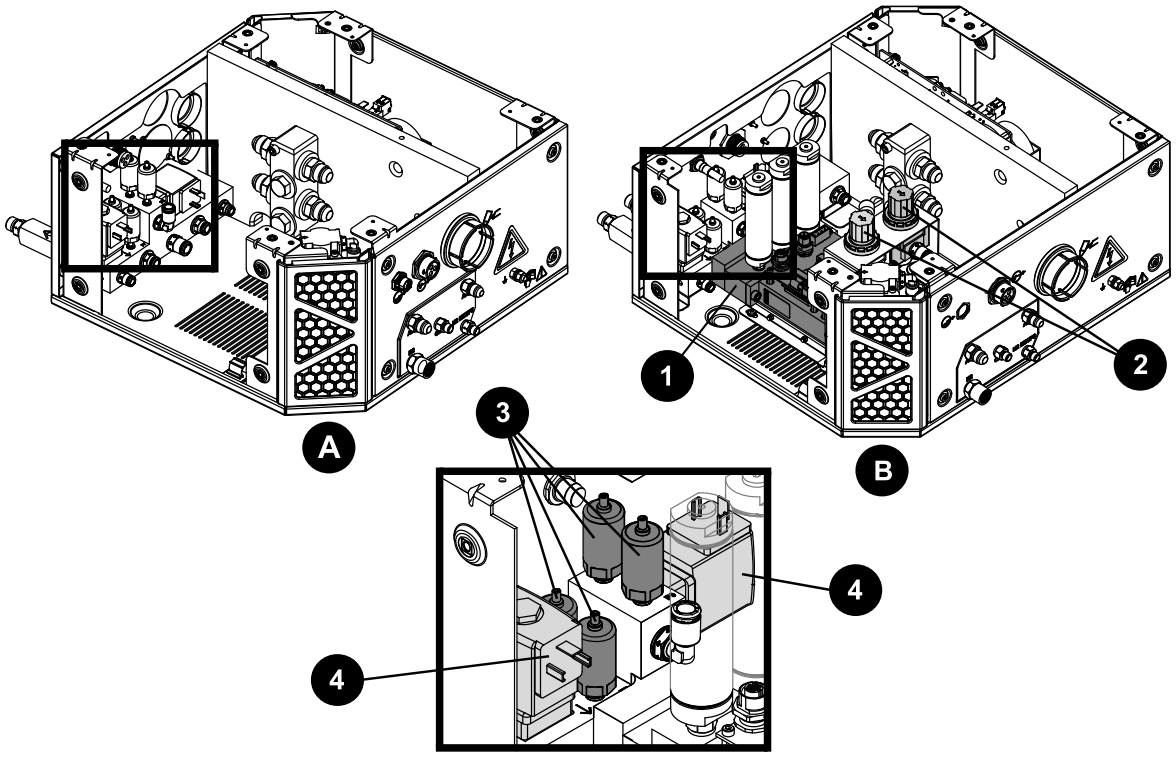

A VWI

B OptiMix

	Part number	Description	Console	Designator	Quantity
1	528057	Kit: Mixer module and cable tie	OptiMix	-	1
2	011101	Regulator	OptiMix	-	2
3	223398	Pressure transducer	VWI and OptiMix	P6 - P9	4
4	006167	Proportional valve	VWI and OptiMix	B4, B5	2

Gas connect console wire harness, hose kit, and CAN cables

Part number	Description	Console	Quantity
229718	Wire harness	Core, CorePlus	1
229719	Wire harness	VWI	
229720	Wire harness	OptiMix	

Part number	Description	Console	Quantity
428490	Kit: Tubing	Core	1
10078918	Kit: Tubing	CorePlus	
428491	Kit: Tubing	VWI	
428492	Kit: Tubing	OptiMix	
223709	CAN cable 0.38 m (1.2 ft) to external connector	Core, CorePlus, VWI, OptiMix	1
223710	CAN cable 0.48 m (1.6 ft) male-female	Core, CorePlus, VWI	1
223711	CAN cable 0.5 m (1.6 ft) male-female	OptiMix	1
223712	CAN cable 0.39 m (1.3 ft) male-female	OptiMix	1

TorchConnect console parts

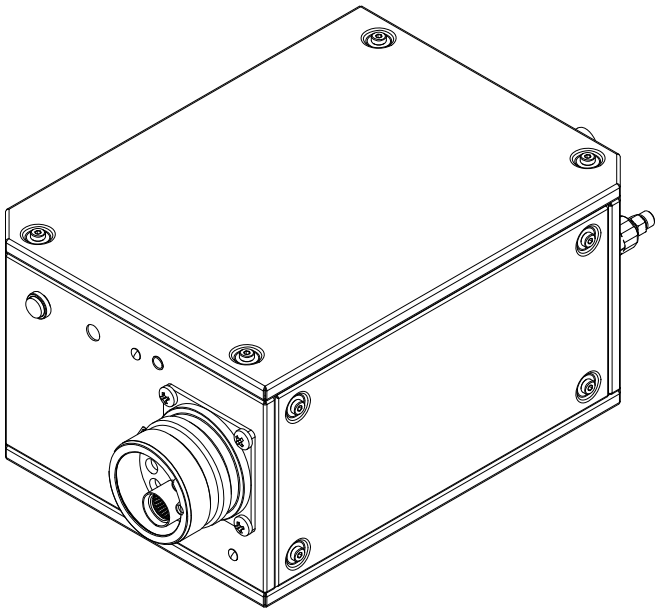

Part number	Description
078618	TorchConnect console

TorchConnect console EasyConnect side

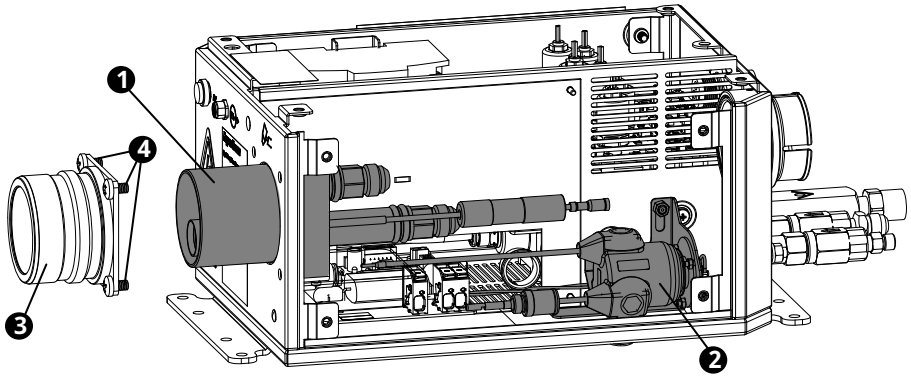

	Part number	Description	Designator	Quantity
1	428730	Torch receptacle block	-	1
2	229882 [1]	Ohmic relay and bracket	-	1
3	420376	Torch lead connector	-	1
4	075544	Machine screw: M6 X 10 mm Phillips, pan head	-	4 (3 shown)

1 Includes the ohmic contact PCB (141368).

TorchConnect console – top

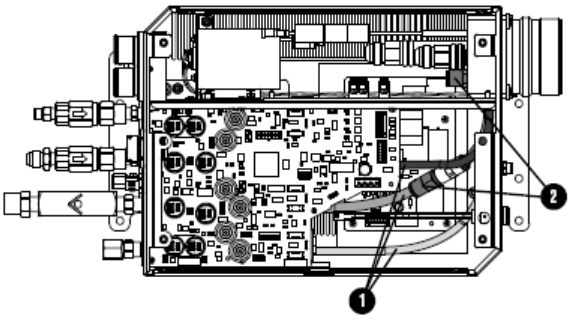

	Part number	Description	Designator	Quantity
1	428338	Kit: Tubing	-	1
2	006152	Check valve	-	2

TorchConnect console manifold side – view 1

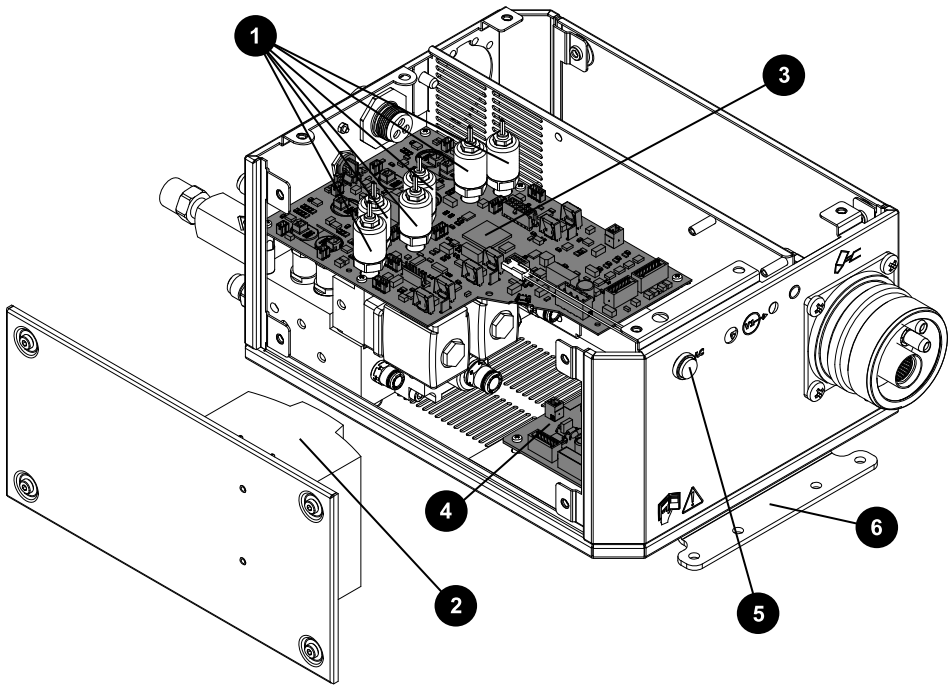

	Part number	Description	Designator	Quantity
1	223477	Pressure transducer with wire and connector	P1 - P5, P14	6
2	229640	Power source: 88 VAC – 264 VAC to 24 VDC	PS1	1
3	141334	Control PCB	PCB1	1
4	141368	Ohmic contact PCB	PCB2	1
5	229825	Green power-indicator LED assembly	-	1
6	101366	Bracket	-	2 (1 shown)
	229780	Valve cable 40 mm (1.6 inches)	-	8
	229800	Valve cable 279.4 mm (11 inches)	-	1
	229655	Wire harness	-	1

TorchConnect console manifold side – view 2

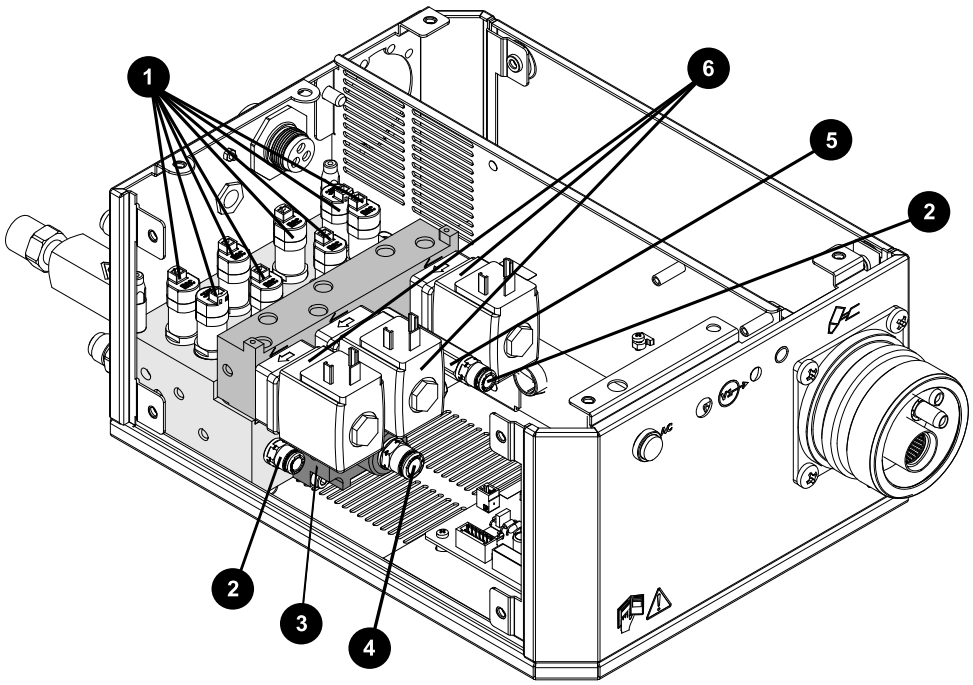

	Part number	Description	Designator	Quantity
	229895	Manifold assembly: ▪ Solenoid valves ▪ Proportional valves ▪ All manifolds ▪ All fittings	-	1
1	229965	Solenoid valve	V4 – V12	9 (8 shown)
	229917	Solenoid valve (229965) tool [1]	-	
2	015905	Adapter: 1/8 inch NPT O-ring seal X 1/4 inch tube	-	2
3	428756	Bottom manifold assembly: ▪ Bottom manifold ▪ Adapter ▪ Critical orifice ▪ Solenoid valve	-	1
4	015811	Adapter: 1/4 inch NPT O-ring seal X 8 mm tube	-	1
5	10084090	Adapter: 1/8 inch FPT X 1/8 inch NPT X 1-5/8 inch with O-ring	-	1
6	006167	Proportional valve	B1 – B3	3
	044508	O-ring		7

1 Use this tool to remove the solenoid valve without removing the control PCB or the pressure transducers.

TorchConnect console front adapters and valves

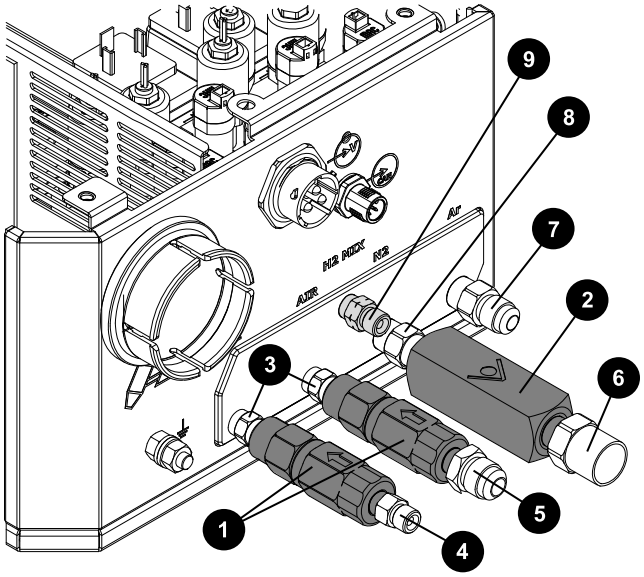

	Part number	Description	Designator	Quantity
1	006077	Check valve: 1/8 inch FPT	-	2
2	006157	Check valve: 1/4 inch NPT female	-	1
	Threaded adapters with thread sealant applied			
3	10083626	1/8 inch hexagonal collar with O-ring	-	2
4	10083766	1/8 inch NPT X RH 'A' with O-ring	-	1
5	10083803	1/8 inch NPT X #6 male with O-ring	-	1
6	10083762	1/4 inch NPT X RH 'B' inert female with O-ring	-	1
7	10083738	1/4 inch NPT X #5 male with O-ring	-	1
8	10083806	1/4 inch hexagonal collar with O-ring	-	1
9	10083783	1/8 inch NPT X LH 'A' male with O-ring	-	1

Torch assembly

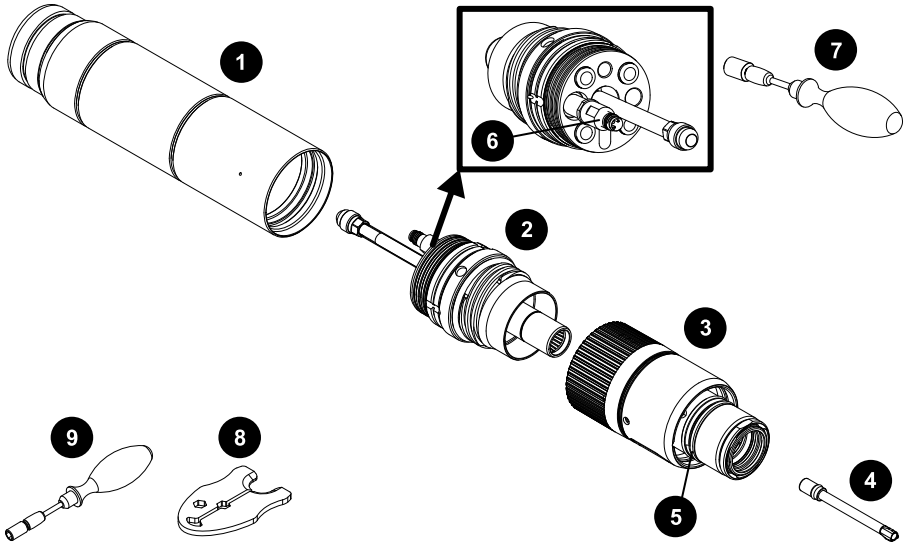

	Part number	Description
1	420500	Torch mount sleeve assembly: Standard
	420501	Torch mount sleeve assembly: Short
	420502	Torch mount sleeve assembly: Extended
2	420220	Quick-disconnect/torch receptacle
3	420221	Quick-disconnect torch
4	420368	Water tube
5	044028	O-ring for quick-disconnect torch (refer to Preventive maintenance kits on page 449)
6	006155	Torch solenoid valve (V1)
7	229918	Torch solenoid valve (V1) tool
8	10080574	XPR consumable tool
9	429013	XPR electrode torque tool
	428846	Torch assembly, 170 A mild steel consumables
	104879	2.25 inch spanner wrench

Torch bracket

Part number	Description
428646	Torch lifter bracket: 2.25 inch diameter sleeve

Consumable starter kits

Refer to Example configurations for consumables on page 242 or the *XPR Cut Charts Instruction Manual (809830)* for specific applications.

Mild steel consumable starter kit (428840)

Part number	Description	Quantity
420231	Electrode: 50 A	1
420234	Nozzle: 50 A	1
420237	Shield: 50 A	1
420233	Swirl ring: 50 A	1
420240	Electrode: 80 A	3
420243	Nozzle: 80 A	3
420246	Shield: 80 A	2
420242	Swirl ring: 80 A – 130 A	2
420249	Electrode: 130 A	3
420252	Nozzle: 130 A	3
420255	Shield: 130 A	2
420261	Nozzle: 170 A	4
420258	Electrode: 170 A	4
420513	Shield: 170 A	3
420260	Swirl ring: 170 A	1
420368	Water tube	1
420200	Shield retaining cap	1
420365	Nozzle retaining cap	1
104879	2.25 inch spanner wrench	1
10080574	XPR consumable tool	1
027055	Silicone lubricant, 1/4 ounce	1

Stainless steel and aluminum consumable starter kit (428843)

Part number	Description	Quantity
420288	Nozzle: 40 A	3
420291	Shield: 40 A	2
420297	Nozzle: 60 A	2
420296	Nozzle: 60 A H_2O	1
420306	Nozzle: 80 A	2
420290	Nozzle: 80 A H_2O	2
420469	Shield: 130 A H_2O	2
420356	Electrode: 130 A - 300 A	3
420315	Nozzle: 130 A	3
420318	Shield: 130 A	2
420472	Shield: 170 A H_2O	1
420324	Nozzle: 170 A	3
420327	Shield: 170 A	1
420303	Electrode: 40 A - 80 A	3
420309	Shield: 60 A - 80 A	2
420294	Electrode: 40 A - 80 A aluminum air/air	2
420300	Shield: 60 A - 80 A H_2O	2
420314	Swirl ring: 40 A - 170 A multiple processes	1
420323	Swirl ring: 60 A - 300 A multiple processes	2
420368	Water tube	1
420200	Shield retaining cap	1
420365	Nozzle retaining cap	1
104879	2.25 inch spanner wrench	1
104119	Consumable tool	1
027055	Silicone lubricant, 1/4 ounce	1

Mild steel consumable starter kit with torch (428842)

Part number	Description	Quantity
420221	Quick-disconnect torch head	1
420231	Electrode: 50 A	1
420234	Nozzle: 50 A	1
420237	Shield: 50 A	1
420233	Swirl ring: 50 A	1
420240	Electrode: 80 A	3
420243	Nozzle: 80 A	3
420246	Shield: 80 A	2
420242	Swirl ring: 80 A – 130 A	2
420249	Electrode: 130 A	3
420252	Nozzle: 130 A	3
420255	Shield: 130 A	2
420261	Nozzle: 170 A	4
420258	Electrode: 170 A	4
420513	Shield: 170 A	3
420260	Swirl ring: 170 A	1
420368	Water tube	2
420200	Shield retaining cap	2
420365	Nozzle retaining cap	2
104879	2.25 inch spanner wrench	1
10080574	XPR consumable tool	1
027055	Silicone lubricant, 1/4 ounce	1

Stainless steel and aluminum consumable starter kit with torch (428841)

Part number	Description	Quantity
420221	Quick-disconnect torch head	1
420288	Nozzle: 40 A	3
420291	Shield: 40 A	2
420297	Nozzle: 60 A	2
420296	Nozzle: 60 A H_2O	1
420306	Nozzle: 80 A	2
420290	Nozzle: 80 A H_2O	2
420469	Shield: 130 A H_2O	2
420356	Electrode: 130 A - 300 A	3
420315	Nozzle: 130 A	3
420318	Shield: 130 A	2
420472	Shield: 170 A H_2O	1
420324	Nozzle: 170 A	3
420327	Shield: 170 A	1
420303	Electrode: 40 A - 80 A	3
420309	Shield: 60 A - 80 A	2
420294	Electrode: 40 A - 80 A aluminum air/air	2
420300	Shield: 60 A - 80 A H_2O	2
420314	Swirl ring: 40 A - 170 A multiple processes	1
420323	Swirl ring: 60 A - 300 A multiple processes	2
420368	Water tube	2
420200	Shield retaining cap	2
420365	Nozzle retaining cap	2
104879	2.25 inch spanner wrench	1
104119	Consumable tool	1
027055	Silicone lubricant, 1/4 ounce	1

Core and CorePlus console non-ferrous consumable starter kit (428944)

Part number	Description	Quantity
420288	Nozzle: 40 A	3
420291	Shield: 40 A	2
420297	Nozzle: 60 A	3
420306	Nozzle: 80 A	3
420356	Electrode: 130 A – 300 A	4
420315	Nozzle: 130 A	2
420318	Shield: 130 A	2
420324	Nozzle: 170 A	3
420327	Shield: 170 A	2
420303	Electrode: 40 A – 80 A	5
420309	Shield: 60 A – 80 A	3
420294	Electrode: 40 A – 80 A aluminum air/air	3
420314	Swirl ring: 40 A – 170 A multiple processes	1
420323	Swirl ring: 60 A – 300 A multiple processes	2
420368	Water tube	1
420200	Shield retaining cap	1
420365	Nozzle retaining cap	1
104879	2.25 inch spanner wrench	1
10080574	Consumable tool	1
027055	Silicone lubricant, 1/4 ounce	1

Other consumable and torch parts

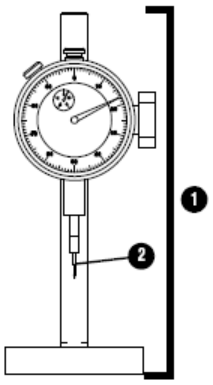

	Part number	Description
1	004630	Pit depth gauge
2	004629	Gauge point – thin tip
	027047	Gauge point – blunt tip
	027055	Silicone lubricant, 1/4 ounce
	10080574	XPR consumable tool
	428764	XPR robotic torch teach accessory
	429013	XPR electrode torque tool

Cable, hose, and lead parts

Use the following cables, hoses, and leads to connect cutting system components.

Pilot-arc cables with strain relief

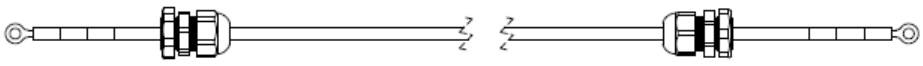

Part number	Length	Part number	Length
223529	3 m (9.8 feet)	223535	25 m (82 feet)
223530	4.5 m (14.8 feet)	223536	35 m (114.8 feet)
223531	7.5 m (24.6 feet)	223537	45 m (147.6 feet)

Part number	Length	Part number	Length
223532	10 m (32.8 feet)	223538	60 m (196.9 feet)
223533	15 m (49.2 feet)	223539	75 m (246.1 feet)
223534	20 m (65.6 feet)	-	-

Negative cables with strain relief

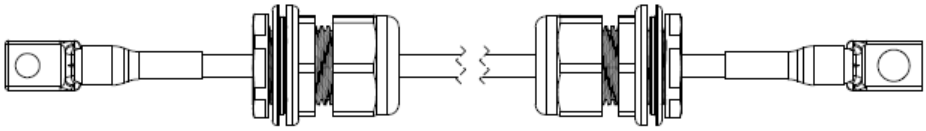

Part number	Type	Length	Part number	Type	Length
223584	1/0	3 m (9.8 feet)	223745 [1]	1/0	3 m (9.8 feet)
223585	1/0	4.5 m (14.8 feet)	223746 [1]	1/0	4.5 m (14.8 feet)
223586	1/0	7.5 m (24.6 feet)	223747 [1]	1/0	7.5 m (24.6 feet)
223587	1/0	10 m (32.8 feet)	223748 [1]	1/0	10 m (32.8 feet)
223588	1/0	15 m (49.2 feet)	223749 [1]	1/0	15 m (49.2 feet)
223589	1/0	20 m (65.6 feet)	223750 [1]	1/0	20 m (65.6 feet)
223590	1/0	25 m (82 feet)	223751 [1]	1/0	25 m (82 feet)
223580	2/0	35 m (114.8 feet)	223558 [1]	2/0	35 m (114.8 feet)
223581	2/0	45 m (147.6 feet)	223559 [1]	2/0	45 m (147.6 feet)
223582	2/0	60 m (196.9 feet)	223560 [1]	2/0	60 m (196.9 feet)
223583	2/0	75 m (246.1 feet)	223561 [1]	2/0	75 m (246.1 feet)

1 Leads labeled with CCC mark only. CCC is defined in Safety and EMC symbols and marks on page 36.

Power cable, 120 VAC

These power cables are 3-position, male-female, 120 VAC cables.

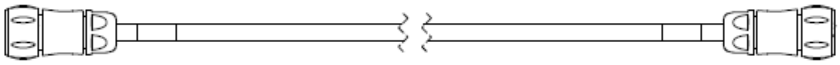

Part number	Length	Part number	Length
223436	3 m (9.8 feet)	223446	25 m (82 feet)
223437	4.5 m (14.8 feet)	223447	35 m (114.8 feet)
223439	7.5 m (24.6 feet)	223448	45 m (147.6 feet)
223441	10 m (32.8 feet)	223449	60 m (196.9 feet)
223444	15 m (49.2 feet)	223450	75 m (246.1 feet)
223445	20 m (65.6 feet)	-	-

Coolant-hose assemblies (plasma power supply to gas connect console)

This hose assembly has an internal diameter of 1.27 cm (0.50 inch).

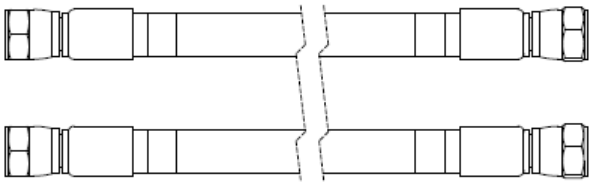

Part number	Length	Part number	Length
428475	3 m (9.8 feet)	428481	25 m (82 feet)
428476	4.5 m (14.8 feet)	428482	35 m (114.8 feet)
428477	7.5 m (24.6 feet)	428483	45 m (147.6 feet)
428478	10 m (32.8 feet)	428484	60 m (196.9 feet)
428479	15 m (49.2 feet)	428485	75 m (246.1 feet)
428480	20 m (65.6 feet)	-	-

CAN cables

CAN cables are 5-position, male-female. One CAN cables is necessary.

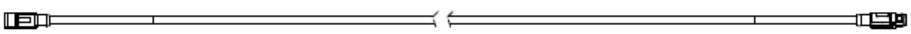

Part number	Length	Part number	Length
223417	3 m (9.8 feet)	223427	25 m (82 feet)
223418	4.5 m (14.8 feet)	223428	35 m (114.8 feet)
223420	7.5 m (24.6 feet)	223429	45 m (147.6 feet)
223422	10 m (32.8 feet)	223430	60 m (196.9 feet)
223425	15 m (49.2 feet)	223431	75 m (246.1 feet)
223426	20 m (65.6 feet)	-	-

Pilot-arc and coolant assemblies (Core, CorePlus)

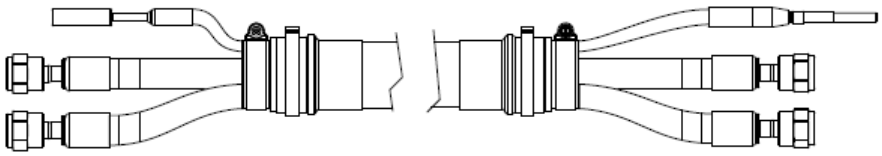

Part number	Length	Part number	Length
428454	3 m (9.8 feet)	428458	10 m (32.8 feet)
428455	4.5 m (14.8 feet)	428459	15 m (49.2 feet)
428456	6 m (19.7 feet)	428983	18 m (59.1 feet) [1]
428457	7.5 m (24.6 feet)	–	–

1 The 18 meter (59.1 feet) assembly is compatible only with the 2 meter (6.6 feet) or 2.5 meter (8.2 feet) torch lead.

Power, CAN, and 3-gas assemblies (Core)

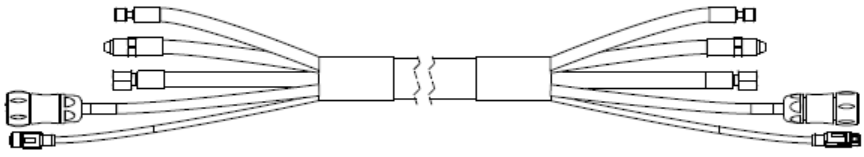

Part number	Length	Part number	Length
428464	3 m (9.8 feet)	428468	10 m (32.8 feet)
428465	4.5 m (14.8 feet)	428469	15 m (49.2 feet)
428466	6 m (19.7 feet)	428982	18 m (59.1 feet) [1]
428467	7.5 m (24.6 feet)	–	–

1 The 18 meter (59.1 feet) assembly is compatible only with the 2 meter (6.6 feet) or 2.5 meter (8.2 feet) torch lead.

Power, CAN, and 4-gas assemblies (CorePlus)

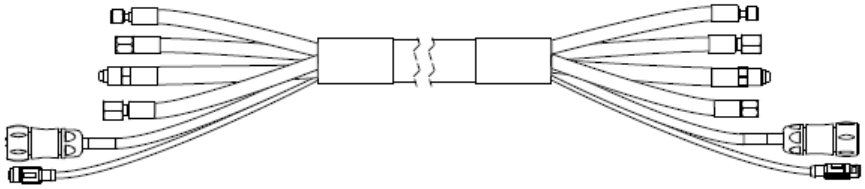

Part number	Length	Part number	Length
10079381	3 m (9.8 feet)	10079385	10 m (32.8 feet)
10079382	4.5 m (14.8 feet)	10079386	15 m (49.2 feet)
10079383	6 m (19.7 feet)	10079387	18 m (59.1 feet) [1]
10079384	7.5 m (24.6 feet)	–	–

1 The 18 meter (59.1 feet) assembly is compatible only with the 2 meter (6.6 feet) or 2.5 meter (8.2 feet) torch lead.

Pilot-arc, coolant-hose, and shield-water assemblies (VWI, OptiMix)

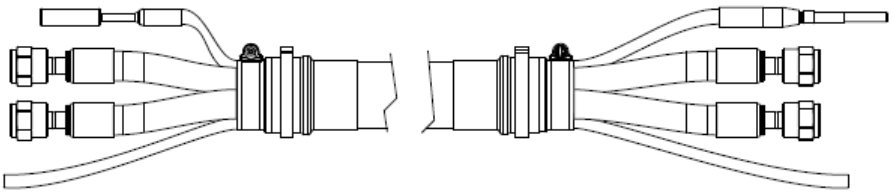

Part number	Length	Part number	Length
428353	3 m (9.8 feet)	428357	10 m (32.8 feet)
428354	4.5 m (14.8 feet)	428358	15 m (49.2 feet)
428355	6 m (19.7 feet)	428981	18 m (59.1 feet) [1]
428356	7.5 m (24.6 feet)	–	–

1 The 18 meter (59.1 feet) assembly is compatible only with the 2 meter (6.6 feet) or 2.5 meter (8.2 feet) torch lead.

Power, CAN, and 5-gas assemblies (VWI, OptiMix)

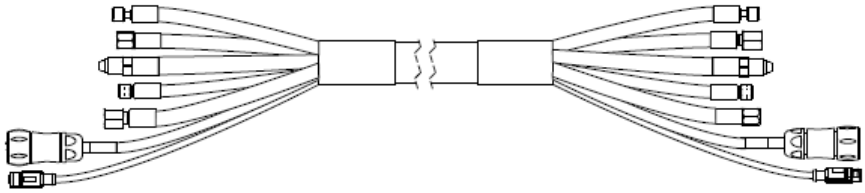

Part number	Length	Part number	Length
428363	3 m (9.8 feet)	428367	10 m (32.8 feet)
428364	4.5 m (14.8 feet)	428368	15 m (49.2 feet)
428365	6 m (19.7 feet)	428980	18 m (59.1 feet) [1]
428366	7.5 m (24.6 feet)	–	–

1 The 18 meter (59.1 feet) assembly is compatible only with the 2 meter (6.6 feet) or 2.5 meter (8.2 feet) torch lead.

EtherCAT and Ethernet LAN interface cables

The EtherCAT and Ethernet LAN interface cable has the following characteristics: RJ-45 connector, male-male, SF/UTP shield, 2 twisted pairs, 22 AWG.

For more information on EtherCAT and Ethernet LAN cable specifications, refer to Requirements for EtherCAT and Ethernet LAN cables on page 151.

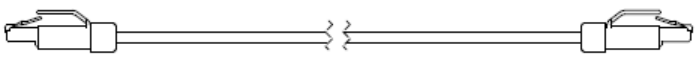

Part number	Length	Part number	Length
223506	0.3 m (1 foot)	223512	10 m (32.8 feet)
223507	0.6 m (2 feet)	223513	15 m (49.2 feet)
223508	1.5 m (4.9 feet)	223514	22.5 m (73.8 feet)
223672	2.5 m (8.2 feet)	223515	30 m (98.4 feet)
223509	3 m (9.8 feet)	223516	45 m (147.6 feet)
223510	6 m (19.7 feet)	223517	60 m (196.9 feet)
223511	7.5 m (24.6 feet)	223714	75 m (246.1 feet)

Discrete interface cables

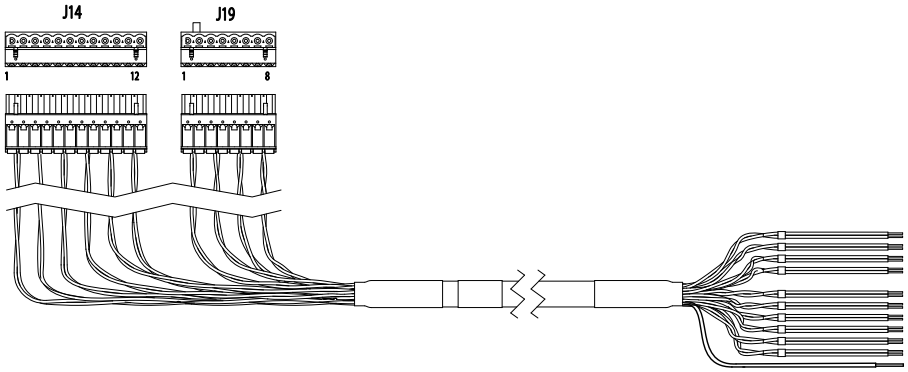

Part number	Length	Part number	Length
223691	3 m (9.8 feet)	223700	20 m (65.6 feet)
223692	4.5 m (14.8 feet)	223701	22.5 m (73.8 feet)
223693	6 m (19.7 feet)	223702	25 m (82 feet)
223694	7.5 m (24.6 feet)	223703	30 m (98.4 feet)
223695	10 m (32.8 feet)	223704	35 m (114.8 feet)
223696	12 m (39.4 feet)	223705	37.5 m (123 feet)
223697	13.5 m (44.3 feet)	223706	45 m (147.6 feet)
223698	15 m (49.2 feet)	223707	60 m (196.9 feet)
223699	16.5 m (54.1 feet)	223708	75 m (246.1 feet)

Discrete cables for the expansion PCB

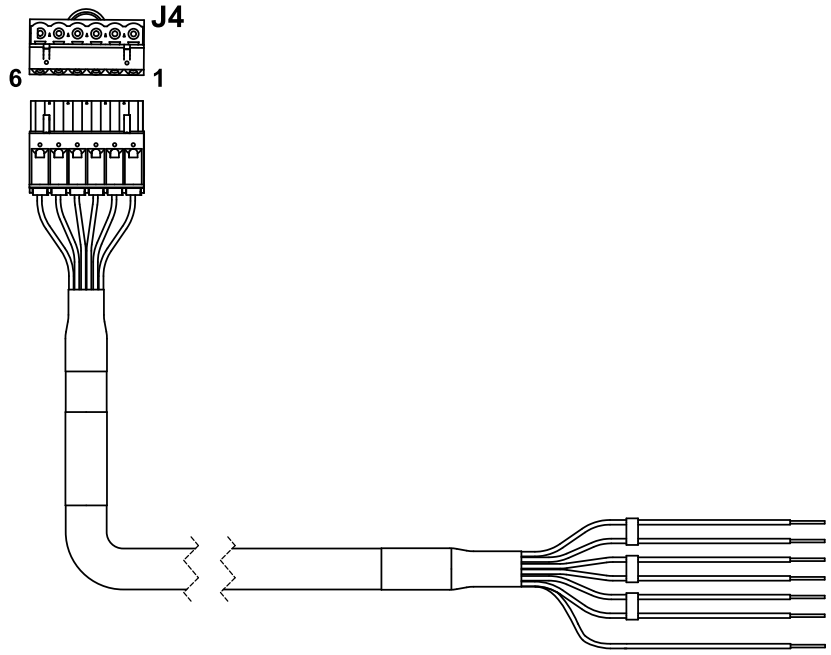

Part number	Length	Part number	Length
10083813	3 m (9.8 feet)	10083823	20 m (65.6 feet)
10083814	4.5 m (14.8 feet)	10083824	22.5 m (73.8 feet)
10083815	6 m (19.7 feet)	10083825	25 m (82 feet)
10083816	7.5 m (24.6 feet)	10083826	30 m (98.4 feet)
10083817	10 m (32.8 feet)	10083827	35 m (114.8 feet)
10083818	12 m (39.4 feet)	10083828	37.5 m (123 feet)
10083819	13.5 m (44.3 feet)	10083829	45 m (147.6 feet)
10083820	15 m (49.2 feet)	10083830	60 m (196.9 feet)
10083822	16.5 m (54.1 feet)	10083831	75 m (246.1 feet)

Serial CNC interface cables

The serial CNC interface cables have the following characteristics: 9-position, D-subminiature (D-sub) connector, male-male, RS-422.

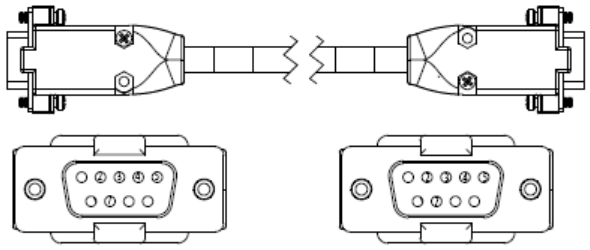

Part number	Length	Part number	Length
223673	3 m (9.8 feet)	223682	20 m (65.6 feet)
223674	4.5 m (14.8 feet)	223683	22.5 m (73.8 feet)
223675	6 m (19.7 feet)	223684	25 m (82.0 feet)
223676	7.5 m (24.6 feet)	223685	30 m (98.4 feet)
223677	10 m (32.8 feet)	223686	35 m (114.8 feet)
223678	12 m (39.4 feet)	223687	37.5 m (123 feet)
223679	13.5 m (44.3 feet)	223688	45 m (147.6 feet)
223680	15 m (49.2 feet)	223689	60 m (196.9 feet)
223681	16.5 m (54.1 feet)	223690	75 m (246.1 feet)

Work cables

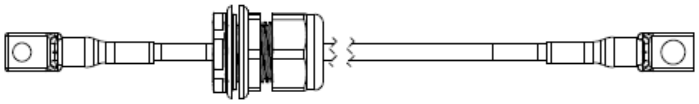

Part number	Type	Length	Part number	Type	Length
223617	1/0	3 m (9.8 feet)	223650 [1]	1/0	3 m (9.8 feet)
223618	1/0	4.5 m (14.8 feet)	223651 [1]	1/0	4.5 m (14.8 feet)
223619	1/0	7.5 m (24.6 feet)	223652 [1]	1/0	7.5 m (24.6 feet)
223620	1/0	10 m (32.8 feet)	223653 [1]	1/0	10 m (32.8 feet)
223621	1/0	15 m (49.2 feet)	223654 [1]	1/0	15 m (49.2 feet)
223622	1/0	20 m (65.6 feet)	223655 [1]	1/0	20 m (65.6 feet)
223623	1/0	25 m (82 feet)	223656 [1]	1/0	25 m (82 feet)
223635	2/0	35 m (114.8 feet)	223668 [1]	2/0	35 m (114.8 feet)

Part number	Type	Length	Part number	Type	Length
223636	2/0	45 m (147.6 feet)	223669 [1]	2/0	45 m (147.6 feet)
223637	2/0	60 m (196.9 feet)	223670 [1]	2/0	60 m (196.9 feet)
223638	2/0	75 m (246.1 feet)	223671 [1]	2/0	75 m (246.1 feet)

1 Leads labeled with CCC mark only. CCC is defined in Safety and EMC symbols and marks on page 36.

Torch leads

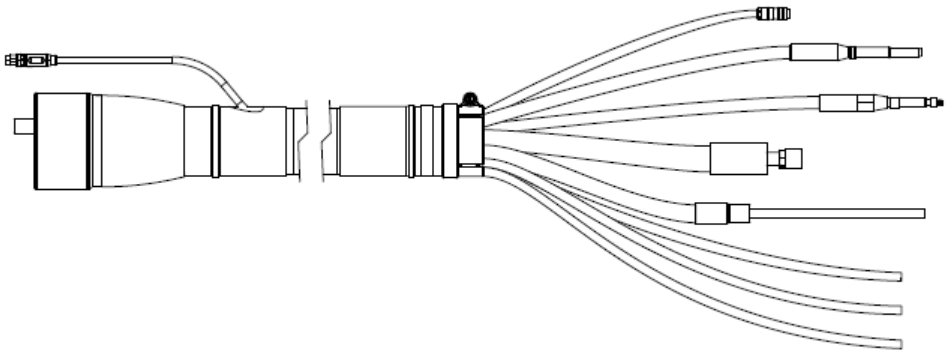

Part number	Length	Part number	Length
428383	2 m (6.6 feet)	428386	3.5 m (11.5 feet)
428384	2.5 m (8.2 feet)	428824	4 m (13.1 feet)
428385	3 m (9.8 feet)	428387	4.5 m (14.8 feet)

Bevel torch leads and bevel robotic leads

Bevel torch leads can also be used as bevel robotic leads.

Part number	Lead length	Strain relief length	Part number	Lead length	Strain relief length
428825	2 m (6.6 feet)	0.5 m (20 inches)	428831	2 m (6.6 feet)	1.2 m (48 inches)
428826	2.5 m (8.2 feet)		428832	2.5 m (8.2 feet)	
428827	3 m (9.8 feet)		428833	3 m (9.8 feet)	
428828	3.5 m (11.5 feet)		428834	3.5 m (11.5 feet)	
428829	4 m (13.1 feet)		428835	4 m (13.1 feet)	
428830	4.5 m (14.8 feet)		428836	4.5 m (14.8 feet)	
428978	6 m (20 feet) [1]		428979	6 m (20 feet) [1]	

1 The 6 meter (20 feet) lead is compatible only with gas assemblies that are 7.5 meters (24.6 feet) or less.

Robotic through-arm leads

Part number	Lead length	Part number	Lead length
428913	2 m (6.6 feet)	428916	3.5 m (11.5 feet)
428914	2.5 m (8.2 feet)	428917	4 m (13.1 feet)
428915	3 m (9.8 feet)	428918	4.5 m (14.8 feet)

Short torch

A different setup and installation is necessary to use the short torch. Refer to the *XPR Short Torch Instruction Manual (810640)* for important information on how to safely install and use this torch.

The XPR short torch can be used only with XPR170 and XPR300 cutting systems.

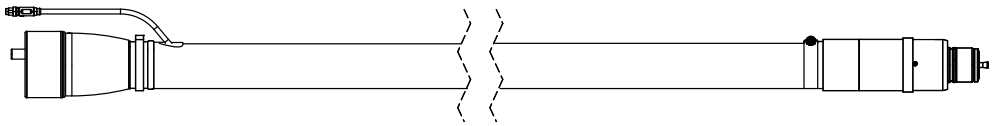

Part number	Description	Quantity
420750	Short torch with integrated lead	1

Oxygen hoses (blue)

The oxygen hose has RH type "B" female fittings.

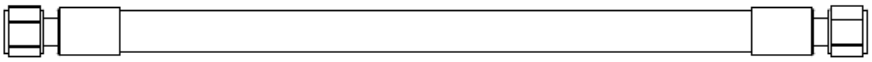

Part number	Length	Part number	Length
124003	3 m (9.8 feet)	124009	25 m (82 feet)
124004	4.5 m (14.8 feet)	124107	30 m (98.4 feet)
124005	7.5 m (24.6 feet)	124010	35 m (114.8 feet)
124006	10 m (32.8 feet)	124011	45 m (147.6 feet)
124007	15 m (49.2 feet)	124012	60 m (196.9 feet)
124008	20 m (65.6 feet)	124013	75 m (246.1 feet)

Nitrogen or Argon hoses (black)

The nitrogen or argon hose has RH type "B" male fittings.

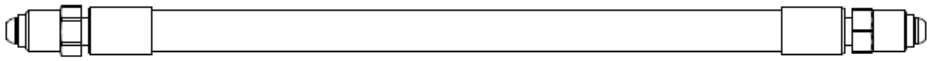

Part number	Length	Part number	Length
124014	3 m (9.8 feet)	124020	25 m (82 feet)
124015	4.5 m (14.8 feet)	124108	30 m (98.4 feet)
124016	7.5 m (24.6 feet)	124021	35 m (114.8 feet)
124017	10 m (32.8 feet)	124022	45 m (147.6 feet)
124018	15 m (49.2 feet)	124023	60 m (196.9 feet)
124019	20 m (65.6 feet)	124024	75 m (246.1 feet)

Air hoses (black)

The air hose has JIC-6 female fittings.



Part number	Length	Part number	Length
124025	3 m (9.8 feet)	124031	25 m (82 feet)
124026	4.5 m (14.8 feet)	124109	30 m (98.4 feet)
124027	7.5 m (24.6 feet)	124032	35 m (114.8 feet)
124028	10 m (32.8 feet)	124033	45 m (147.6 feet)
124029	15 m (49.2 feet)	124034	60 m (196.9 feet)
124030	20 m (65.6 feet)	124035	75 m (246.1 feet)

Hydrogen or nitrogen-hydrogen (F5) hoses (red)

The hydrogen or nitrogen-hydrogen (F5) hose has LH type "B" female fittings.

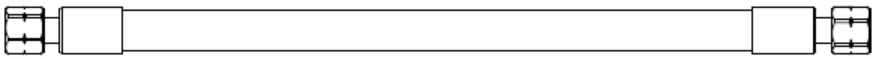

Part number	Length	Part number	Length
124036	3 m (9.8 feet)	124042	25 m (82 feet)
124037	4.5 m (14.8 feet)	124110	30 m (98.4 feet)
124038	7.5 m (24.6 feet)	124043	35 m (114.8 feet)
124039	10 m (32.8 feet)	124044	45 m (147.6 feet)
124040	15 m (49.2 feet)	124045	60 m (196.9 feet)
124041	20 m (65.6 feet)	124046	75 m (246.1 feet)

Water (optional shield fluid) hoses (blue)

The water hose has JIC-6 female fittings.

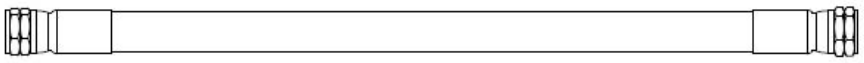

Part number	Length	Part number	Length
124047	3 m (9.8 feet)	124053	25 m (82 feet)
124048	4.5 m (14.8 feet)	124111	30 m (98.4 feet)
124049	7.5 m (24.6 feet)	124054	35 m (114.8 feet)

Part number	Length	Part number	Length
124050	10 m (32.8 feet)	124055	45 m (147.6 feet)
124051	15 m (49.2 feet)	124056	60 m (196.9 feet)
124052	20 m (65.6 feet)	124057	75 m (246.1 feet)

Preventive maintenance kits

Part number	Description
428639	Kit: Filter, torch rebuild without coolant
428640	Kit: Filter, torch rebuild with coolant
428878	Kit: Electronics (200 V – 240 V)
428879	Kit: Electronics (380 V – 600 V)

Tools

Part number	Description
229917	TorchConnect console solenoid valve tool
229918	Torch solenoid valve tool
104879	2.25 inch spanner wrench
004630	Pit depth gauge
004629	Gauge point
10080574	XPR consumable tool
429013	XPR electrode torque tool
1-13897 (Hypertherm Waterjet part number)	TDS meter

Recommended spare parts

Plasma power supply – recommended spare parts

Hypertherm recommends that you keep these parts available for the plasma power supply.

Part number	Description	Designator	Quantity
428810	Shield-fluid treatment filter	–	1
027005	Coolant filter (fine)	–	1
006113	Coolant check valve	–	1
229640	Power source: 88 VAC – 264 VAC to 24 VDC	PS1	1
229671	Power source: 88 VAC – 264 VAC to 48 VDC, 600 W	PS2	1
10085251	Chopper assembly	Chopper 1	1
10084334	Kit: XPR main control PCB assembly and wireless tag	PCB1	1
10081573	Kit: I/O PCB	PCB5	1
141384	Fan power distribution PCB	PCB6	1
428893	Power distribution PCB	PCB7	1
10084820	Fuse: 15 A, 250 VAC, time delay (on PCB7)	F1, F2	2
108709	Fuse: 10 A, 250 VAC, time delay (on PCB7)	F3	1
208397 [1]	Fuse: 15 A, 600 V, Class R (used in 200 V, 208 V, 220 V, 240 V)	F1, F2	2
208395 [1]	Fuse: 8 A, 600 V, Class R (used in 380 V, 400 V, 415 V, 440 V, 480 V, 600 V)		2
003277	Pilot arc relay: 24 VDC, coil, 60 A 28 VDC contacts	CR1	1
003276 [1]	Main contactor (200 V, 208 V, 220 V, 240 V)	M_CON	1
429060 [1]	Main contactor assembly (380 V, 400 V, 415 V, 440 V, 480 V, 600 V)		1

1 Select the part that is the correct voltage for your cutting system and worksite.

Gas connect consoles – recommended spare parts

Hypertherm recommends that you keep these parts available for the gas connect consoles.

Part number	Description	Designator	Quantity
011110	Air filter element	-	1
223398	Pressure transducer (VWI and OptiMix only)	P6 - P9	1
006167	Proportional valve (VWI and OptiMix only)	B4 - B5	1
141563	High-frequency, high-voltage ignition PCB	PCB2	1
141595	Spark gap PCB for ignition PCB	-	1

TorchConnect console – recommended spare parts

Hypertherm recommends that you keep these parts available for the TorchConnect console.

Part number	Description	Designator	Quantity
141368	Ohmic contact PCB	PCB2	1
223477	Pressure transducer with wire and connector	P1 - P5, P14	1
006167	Proportional valve	B1 - B3	1
229965	Solenoid valve	V4 - V12	1

Torch – recommended spare parts

Hypertherm recommends that you keep these parts available for the torch.

Part number	Description	Designator	Quantity
420220	Quick-disconnect/torch receptacle	-	1
420221	Quick-disconnect torch	-	1
420368	Water tube	-	1
006155	Torch solenoid valve	-	1
428639	Kit: Filter, torch rebuild without coolant	-	1
428640	Kit: Filter, torch rebuild with coolant	-	1

Descriptions of warning label icons

This warning label is affixed to some plasma power supplies. It is important that the operator and maintenance technician understand the intent of these warning symbols as described.

The numbered text in the table corresponds to the numbered boxes on the label.



1.	Cutting sparks can cause explosion or fire.
1.1	Do not cut near flammables.
1.2	Have a fire extinguisher nearby and ready to use.
1.3	Do not use a drum or other closed container as a cutting table.
2.	Plasma arc can injure and burn; point the nozzle away from yourself. Arc starts instantly when triggered.
2.1	Turn off power before disassembling torch.
2.2	Do not grip the workpiece near the cutting path.
2.3	Wear complete body protection.
3.	Hazardous voltage. Risk of electric shock or burn.
3.1	Wear insulating gloves. Replace gloves when wet or damaged.
3.2	Protect from shock by insulating yourself from work and ground.
3.3	Disconnect power before servicing. Do not touch live parts.
4.	Plasma fumes can be hazardous.
4.1	Do not inhale fumes.
4.2	Use forced ventilation or local exhaust to remove the fumes.
4.3	Do not operate in closed spaces. Remove fumes with ventilation.
5.	Arc rays can burn eyes and injure skin.
5.1	Wear correct and appropriate protective equipment to protect head, eyes, ears, hands, and body. Button shirt collar. Protect ears from noise. Use welding helmet with the correct shade of filter.
6.	Become trained. Only qualified personnel should operate this equipment. Use torches specified in the manual. Keep nonqualified personnel and children away.
7.	Do not remove, destroy, or cover this label. Replace if it is missing, damaged, or worn.

10 Wiring Diagrams

Wiring diagram conventions

When you look for a signal path on the wiring diagrams, use the following conventions to find the path where it continues on a different sheet or at a different location on the same sheet:

- Sheet numbers are in the lower right corner of each sheet.
- References to other locations use the following connection symbol and conventions.

Use the sheet number to find the reference sheet. Align the coordinates A–D on the Y axis with the numbers 1–4 on the X axis of each sheet to find the reference blocks (similar to a road map).

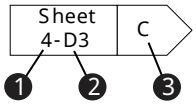

1 Sheet number

2 Coordinates

3 Reference block

Wiring diagram symbols

These symbols are used in the wiring diagrams to represent elements of the plasma cutting system and torch.


Battery


Ground clamp


Receptacle


Cap, polarized


Ground, chassis


Relay, coil


Cap, not polarized


Cap, feed-through


Circuit breaker

Coax shield


Current sensor


Current sensor


DC supply


Diode


Door interlock


Fan


Feed-through LC


Filter, AC


Fuse


Switch, pressure, normally open


Switch, 1 pole, 1 throw


Switch, 1 pole, 2 throw


Switch, 1 pole, 2 throw, center off


Switch, temperature, normally closed


Switch, temperature, normally open



Terminal block


Ground, earth


IGBT


Inductor


LED


Lamp


MOV


Pin


Socket


Plug


PNP transistor


Potentiometer


Push button, normally closed


Push button, normally open


Time delay open, NO/off


Time delay open, NC/on


Time delay closed, NO/off


Transformer


Transformer, air core


Transformer, coil


Triac

Relay, normally closed

Relay, normally open

Relay, solid state, AC

Relay, solid state, DC

Relay, solid state

Resistor

SCR

Shield

Shunt

Spark gap

Switch, flow

Switch, level, normally closed

Switch, pressure, normally closed

Valve, solenoid

Voltage source

Zener diode



Time delay closed, NC/off



VAC source

Torch symbols



Electrode



Nozzle

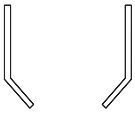

Shield

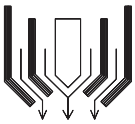

Torch

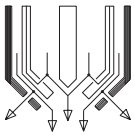

Torch, HyDefinition

Valve states during operation

During each stage of cutting system operation, different valves are active (ON) or inactive (OFF). The type of gas connect console and the type and timing of the active process changes the valves that are active or inactive.

Refer to the CNC or XPR web interface to see the most current information about the state (ON-OFF) of each valve:

- For information about how to view valve states on the CNC, refer to the instruction manual that came with your CNC.
- To view valve states on the XPR web interface:
  a Use the XPR web interface to select the process you want to view.
  b Go to the **Gas System** screen.

Refer to Gas system screen on page 187. On this screen you can see which valves are active when the gas is flowing. Active valves are indicated with a gray highlight.

c On the **Gas System** screen, enable the desired mode (**Test Preflow**, **Test Pierceflow**, or **Test Cutflow**) for the process you want to view.

Valve states by process ID

The table shows whether the valve is active (ON) or inactive (OFF) for different types of blocks (preflow, cutflow, piercing) and gases in certain processes.

Table 41 - Valve states by process ID

	Process IDs: 1001, 1002, 1003, 1004, 1005, 1151, 1152, 1153, 1155, 1156																		
	Block type	Gas	V1	V4	V5	V6	V7	V8	V9	V10	V11	V12	B1	B2	B3	B4	B5	B8	B9	B10
	Preflow	N_2/Air	Off	Off	Off	**On**	Off	Off	**On**	Off	Off	Off	**On**	**On**	Off	Off	Off	Off	Off	Off
	Cutflow	O_2/Air	**On**	Off	Off	**On**	Off	Off	**On**	Off	**On**	**On**	Off	**On**	**On**	Off	Off	Off	Off	Off
	Piercing	O_2/Air	**On**	Off	Off	**On**	Off	Off	**On**	Off	Off	**On**	Off	**On**	**On**	Off	Off	Off	Off	Off
	Process IDs: 7001, 7004, 7005, 7007, 7008, 7009, 7010, 7011, 7012, 7013, 7018, 7020																		
	Block type	Gas	V1	V4	V5	V6	V7	V8	V9	V10	V11	V12	B1	B2	B3	B4	B5	B8	B9	B10
	Preflow	N_2/Air	Off	Off	Off	**On**	Off	Off	**On**	Off	Off	Off	**On**	**On**	Off	Off	Off	Off	Off	Off
	Cutflow	O_2/O_2	**On**	Off	Off	Off	**On**	Off	**On**	Off	**On**	**On**	Off	**On**	**On**	Off	Off	Off	Off	Off
	Piercing	O_2/Air	**On**	Off	Off	**On**	Off	Off	**On**	Off	Off	**On**	Off	**On**	**On**	Off	Off	Off	Off	Off
	Process IDs: 8001																		
	Block type	Gas	V1	V4	V5	V6	V7	V8	V9	V10	V11	V12	B1	B2	B3	B4	B5	B8	B9	B10
	Preflow	N_2/N_2	Off	Off	**On**	Off	Off	Off	**On**	Off	Off	Off	**On**	**On**	Off	Off	Off	Off	Off	Off
	Cutflow	N_2/N_2	Off	Off	**On**	Off	Off	Off	**On**	Off	**On**	Off	**On**	**On**	Off	Off	Off	Off	Off	Off
	Piercing	N_2/N_2	Off	Off	**On**	Off	Off	Off	**On**	Off	Off	Off	**On**	**On**	Off	Off	Off	Off	Off	Off

Table 41 - Valve states by process ID (continued)

	Process IDs: 9001, 9010, 9018																		
	Block type	Gas	V1	V4	V5	V6	V7	V8	V9	V10	V11	V12	B1	B2	B3	B4	B5	B8	B9	B10
	Preflow	Ar/Air	Off	Off	Off	**On**	Off	**On**	Off	Off	**On**	Off	**On**	**On**	Off	Off	Off	Off	Off	Off
	Cutflow	Ar/Air	Off	Off	Off	**On**	Off	**On**	Off	Off	**On**	Off	**On**	**On**	Off	Off	Off	Off	Off	Off
	Piercing	Ar/Air	Off	Off	Off	**On**	Off	**On**	Off	Off	**On**	Off	**On**	**On**	Off	Off	Off	Off	Off	Off
	Process IDs: 2051, 2054, 2057, 2100, 8004, 8005, 8006																		
	Block type	Gas	V1	V4	V5	V6	V7	V8	V9	V10	V11	V12	B1	B2	B3	B4	B5	B8	B9	B10
	Preflow	N_2/N_2	Off	Off	**On**	Off	Off	Off	Off	Off	Off	Off	**On**	**On**	Off	Off	Off	Off	Off	Off
	Cutflow	N_2/N_2	Off	Off	**On**	Off	Off	Off	Off	Off	Off	Off	**On**	**On**	Off	Off	Off	Off	Off	Off
	Piercing	N_2/N_2	Off	Off	**On**	Off	Off	Off	Off	Off	Off	Off	**On**	**On**	Off	Off	Off	Off	Off	Off
	Process IDs: 2010, 2011, 2028, 2029, 2052, 2055, 2058																		
	Block type	Gas	V1	V4	V5	V6	V7	V8	V9	V10	V11	V12	B1	B2	B3	B4	B5	B8	B9	B10
	Preflow	N_2/H2O	Off	Off	Off	Off	Off	Off	Off	Off	Off	Off	**On**	**On**	Off	Off	**On**	Off	Off	Off
	Cutflow	N_2/H2O	Off	Off	Off	Off	Off	Off	Off	Off	Off	Off	**On**	**On**	Off	Off	**On**	Off	Off	Off
	Piercing	N_2/H2O	Off	Off	Off	Off	Off	Off	Off	Off	Off	Off	**On**	**On**	Off	Off	**On**	Off	Off	Off

Table 41 - Valve states by process ID (continued)

	Process IDs: 2053, 2056, 2059, 2060, 2061, 2062, 2063, 2064, 2065, 2066																		
	Block type	Gas	V1	V4	V5	V6	V7	V8	V9	V10	V11	V12	B1	B2	B3	B4	B5	B8	B9	B10
	Preflow	N_2/N_2	Off	Off	**On**	Off	Off	Off	Off	Off	Off	Off	**On**	**On**	Off	Off	Off	Off	Off	Off
	Cutflow	Mix/N_2	**On**	Off	**On**	Off	Off	Off	Off	**On**	Off	Off	Off	**On**	Off	Off	Off	**On**	**On**	**On**
	Piercing	Mix/N_2	**On**	Off	**On**	Off	Off	Off	Off	**On**	Off	Off	Off	**On**	Off	Off	Off	**On**	**On**	**On**
	Process IDs: 1201, 1203, 1206, 1251, 1252, 1253, 1254, 1255, 1281, 1282, 1283, 1284, 1285, 1286, 1287																		
	Block type	Gas	V1	V4	V5	V6	V7	V8	V9	V10	V11	V12	B1	B2	B3	B4	B5	B8	B9	B10
	Preflow	N_2/Air	Off	Off	Off	**On**	Off	Off	**On**	Off	Off	Off	**On**	**On**	Off	Off	Off	Off	Off	Off
	Cutflow	O_2/Air	**On**	Off	Off	**On**	Off	Off	**On**	Off	Off	**On**	Off	**On**	**On**	Off	Off	Off	Off	Off
	Piercing	O_2/Air	**On**	Off	Off	**On**	Off	Off	**On**	Off	Off	**On**	Off	**On**	**On**	Off	Off	Off	Off	Off
	Process IDs: 1051, 7014, 7015																		
	Block type	Gas	V1	V4	V5	V6	V7	V8	V9	V10	V11	V12	B1	B2	B3	B4	B5	B8	B9	B10
	Preflow	N_2/O_2	Off	Off	Off	Off	**On**	Off	**On**	Off	Off	Off	**On**	**On**	Off	Off	Off	Off	Off	Off
	Cutflow	O_2/O_2	**On**	Off	Off	Off	**On**	Off	**On**	Off	**On**	**On**	Off	**On**	**On**	Off	Off	Off	Off	Off
	Piercing	O_2/O_2	**On**	Off	Off	Off	**On**	Off	**On**	Off	Off	**On**	Off	**On**	**On**	Off	Off	Off	Off	Off

Table 41 - Valve states by process ID (continued)

	Process IDs: 1101, 1102																		
	Block type	Gas	V1	V4	V5	V6	V7	V8	V9	V10	V11	V12	B1	B2	B3	B4	B5	B8	B9	B10
	Preflow	N_2/Air	Off	Off	Off	**On**	Off	Off	**On**	Off	Off	Off	**On**	**On**	Off	Off	Off	Off	Off	Off
	Cutflow	O_2/Air	**On**	Off	Off	**On**	Off	Off	**On**	Off	Off	Off	Off	**On**	**On**	Off	Off	Off	Off	Off
	Piercing	O_2/Air	**On**	Off	Off	**On**	Off	Off	**On**	Off	Off	Off	Off	**On**	**On**	Off	Off	Off	Off	Off
	Process IDs: 1103, 1104, 1105, 1106, 1107																		
	Block type	Gas	V1	V4	V5	V6	V7	V8	V9	V10	V11	V12	B1	B2	B3	B4	B5	B8	B9	B10
	Preflow	N_2/Air	Off	Off	Off	**On**	Off	Off	**On**	Off	Off	Off	**On**	**On**	Off	Off	Off	Off	Off	Off
	Cutflow	O_2/Air	**On**	Off	Off	**On**	Off	Off	**On**	Off	**On**	Off	Off	**On**	**On**	Off	Off	Off	Off	Off
	Piercing	O_2/Air	**On**	Off	Off	**On**	Off	Off	**On**	Off	Off	Off	Off	**On**	**On**	Off	Off	Off	Off	Off
	Process IDs: 7002, 7003, 7006																		
	Block type	Gas	V1	V4	V5	V6	V7	V8	V9	V10	V11	V12	B1	B2	B3	B4	B5	B8	B9	B10
	Preflow	N_2/Air	Off	Off	Off	**On**	Off	Off	**On**	Off	Off	Off	**On**	**On**	Off	Off	Off	Off	Off	Off
	Cutflow	O_2/O_2	**On**	Off	Off	Off	**On**	Off	**On**	Off	**On**	Off	Off	**On**	**On**	Off	Off	Off	Off	Off
	Piercing	O_2/Air	**On**	Off	Off	**On**	Off	Off	**On**	Off	Off	Off	Off	**On**	**On**	Off	Off	Off	Off	Off

Table 41 - Valve states by process ID (continued)

	Process IDs: 2001, 2002, 2003, 2004, 2005																		
	Block type	Gas	V1	V4	V5	V6	V7	V8	V9	V10	V11	V12	B1	B2	B3	B4	B5	B8	B9	B10
	Preflow	N_2/N_2	Off	Off	**On**	Off	Off	Off	Off	**On**	Off	Off	**On**	**On**	Off	**On**	Off	Off	Off	Off
	Cutflow	$F5/N_2$	**On**	Off	**On**	Off	Off	Off	Off	**On**	**On**	Off	Off	**On**	Off	**On**	Off	Off	Off	Off
	Piercing	$F5/N_2$	**On**	Off	**On**	Off	Off	Off	Off	**On**	**On**	Off	Off	**On**	Off	**On**	Off	Off	Off	Off
	Process IDs: 2006, 2007, 2012, 2013, 2014, 2015, 2024, 2025, 2026																		
	Block type	Gas	V1	V4	V5	V6	V7	V8	V9	V10	V11	V12	B1	B2	B3	B4	B5	B8	B9	B10
	Preflow	N_2/N_2	Off	Off	**On**	Off	Off	Off	Off	Off	Off	Off	**On**	**On**	Off	Off	Off	Off	Off	Off
	Cutflow	N_2/N_2	Off	Off	**On**	Off	Off	Off	Off	Off	**On**	Off	**On**	**On**	Off	Off	Off	Off	Off	Off
	Piercing	N_2/N_2	Off	Off	**On**	Off	Off	Off	Off	Off	**On**	Off	**On**	**On**	Off	Off	Off	Off	Off	Off
	Process IDs: 2008, 2009																		
	Block type	Gas	V1	V4	V5	V6	V7	V8	V9	V10	V11	V12	B1	B2	B3	B4	B5	B8	B9	B10
	Preflow	N_2/Air	Off	Off	Off	**On**	Off	Off	Off	Off	Off	Off	**On**	**On**	Off	Off	Off	Off	Off	Off
	Cutflow	Air/Air	**On**	Off	Off	**On**	Off	Off	Off	Off	**On**	Off	Off	**On**	**On**	Off	Off	Off	Off	Off
	Piercing	Air/N_2	**On**	Off	**On**	Off	Off	Off	Off	Off	**On**	Off	Off	**On**	**On**	Off	Off	Off	Off	Off

Table 41 - Valve states by process ID (continued)

	Process IDs: 2016, 2017, 2018, 2019																		
	Block type	Gas	V1	V4	V5	V6	V7	V8	V9	V10	V11	V12	B1	B2	B3	B4	B5	B8	B9	B10
	Preflow	N_2/Air	Off	Off	Off	**On**	Off	Off	Off	Off	Off	Off	**On**	**On**	Off	Off	Off	Off	Off	Off
	Cutflow	Air/Air	**On**	Off	Off	**On**	Off	Off	Off	Off	**On**	Off	Off	**On**	**On**	Off	Off	Off	Off	Off
	Piercing	Air/Air	**On**	Off	Off	**On**	Off	Off	Off	Off	**On**	Off	Off	**On**	**On**	Off	Off	Off	Off	Off
	Process IDs: 2020, 2021, 2022, 2023																		
	Block type	Gas	V1	V4	V5	V6	V7	V8	V9	V10	V11	V12	B1	B2	B3	B4	B5	B8	B9	B10
	Preflow	N_2/N_2	Off	Off	**On**	Off	Off	Off	Off	**On**	Off	Off	**On**	**On**	Off	**On**	Off	Off	Off	Off
	Cutflow	F5/N_2	**On**	Off	**On**	Off	Off	Off	Off	**On**	Off	Off	Off	**On**	Off	**On**	Off	Off	Off	Off
	Piercing	F5/N_2	**On**	Off	**On**	Off	Off	Off	Off	**On**	Off	Off	Off	**On**	Off	**On**	Off	Off	Off	Off
	Process IDs: 9004, 9005, 9006, 9014, 9015, 9016, 9017																		
	Block type	Gas	V1	V4	V5	V6	V7	V8	V9	V10	V11	V12	B1	B2	B3	B4	B5	B8	B9	B10
	Preflow	Ar/N_2	Off	Off	**On**	Off	Off	**On**	Off	Off	Off	Off	**On**	**On**	Off	Off	Off	Off	Off	Off
	Cutflow	Ar/N_2	Off	Off	**On**	Off	Off	**On**	Off	Off	Off	Off	**On**	**On**	Off	Off	Off	Off	Off	Off
	Piercing	Ar/N_2	Off	Off	**On**	Off	Off	**On**	Off	Off	Off	Off	**On**	**On**	Off	Off	Off	Off	Off	Off

Table 41 - Valve states by process ID (continued)

	Process IDs: 8007, 8010																		
	Block type	Gas	V1	V4	V5	V6	V7	V8	V9	V10	V11	V12	B1	B2	B3	B4	B5	B8	B9	B10
	Preflow	N_2/Air	Off	Off	Off	**On**	Off	Off	**On**	Off	Off	Off	**On**	**On**	Off	Off	Off	Off	Off	Off
	Cutflow	N_2/Air	Off	Off	Off	**On**	Off	Off	**On**	Off	Off	Off	**On**	**On**	Off	Off	Off	Off	Off	Off
	Piercing	N_2/Air	Off	Off	Off	**On**	Off	Off	**On**	Off	Off	Off	**On**	**On**	Off	Off	Off	Off	Off	Off
	Process IDs: 9007, 9019																			
	Block type	Gas	V1	V4	V5	V6	V7	V8	V9	V10	V11	V12	B1	B2	B3	B4	B5	B8	B9	B10
	Preflow	Ar/Air	Off	Off	Off	**On**	Off	**On**	**On**	Off	**On**	Off	**On**	**On**	Off	Off	Off	Off	Off	Off
	Cutflow	Ar/Air	Off	Off	Off	**On**	Off	**On**	**On**	Off	**On**	Off	**On**	**On**	Off	Off	Off	Off	Off	Off
	Piercing	Ar/Air	Off	Off	Off	**On**	Off	**On**	**On**	Off	**On**	Off	**On**	**On**	Off	Off	Off	Off	Off	Off
	Process IDs: 9008																			
	Block type	Gas	V1	V4	V5	V6	V7	V8	V9	V10	V11	V12	B1	B2	B3	B4	B5	B8	B9	B10
	Preflow	Ar/Air	Off	Off	Off	**On**	Off	**On**	Off	Off	Off	Off	**On**	**On**	Off	Off	Off	Off	Off	Off
	Cutflow	Ar/Air	Off	Off	Off	**On**	Off	**On**	Off	Off	Off	Off	**On**	**On**	Off	Off	Off	Off	Off	Off
	Piercing	Ar/N_2	Off	Off	**On**	Off	Off	**On**	Off	Off	Off	Off	**On**	**On**	Off	Off	Off	Off	Off	Off

Table 41 - Valve states by process ID (continued)

	Process IDs: 9002, 9003, 9009																		
	Block type	Gas	V1	V4	V5	V6	V7	V8	V9	V10	V11	V12	B1	B2	B3	B4	B5	B8	B9	B10
	Preflow	Ar/N_2	Off	Off	**On**	Off	Off	**On**	Off	Off	**On**	Off	**On**	**On**	Off	Off	Off	Off	Off	Off
	Cutflow	Ar/N_2	Off	Off	**On**	Off	Off	**On**	Off	Off	**On**	Off	**On**	**On**	Off	Off	Off	Off	Off	Off
	Piercing	Ar/N_2	Off	Off	**On**	Off	Off	**On**	Off	Off	**On**	Off	**On**	**On**	Off	Off	Off	Off	Off	Off
	Process IDs: 1202, 1204																		
	Block type	Gas	V1	V4	V5	V6	V7	V8	V9	V10	V11	V12	B1	B2	B3	B4	B5	B8	B9	B10
	Preflow	N_2/N_2	Off	Off	**On**	Off	Off	Off	**On**	Off	Off	Off	**On**	**On**	Off	Off	Off	Off	Off	Off
	Cutflow	O_2/N_2	**On**	Off	**On**	Off	Off	Off	**On**	Off	Off	**On**	Off	**On**	**On**	Off	Off	Off	Off	Off
	Piercing	O_2/N_2	**On**	Off	**On**	Off	Off	Off	**On**	Off	Off	**On**	Off	**On**	**On**	Off	Off	Off	Off	Off
	Process IDs: 2027, 2101																		
	Block type	Gas	V1	V4	V5	V6	V7	V8	V9	V10	V11	V12	B1	B2	B3	B4	B5	B8	B9	B10
	Preflow	N_2/Air	Off	Off	Off	**On**	Off	Off	Off	Off	Off	Off	**On**	**On**	Off	Off	Off	Off	Off	Off
	Cutflow	Air/Air	**On**	Off	Off	**On**	Off	Off	Off	Off	**On**	Off	Off	**On**	**On**	Off	Off	Off	Off	Off
	Piercing	Air/Air	**On**	Off	Off	**On**	Off	Off	Off	Off	Off	Off	Off	**On**	**On**	Off	Off	Off	Off	Off

Table 41 - Valve states by process ID (continued)

	Process IDs: 8002																		
	Block type	Gas	V1	V4	V5	V6	V7	V8	V9	V10	V11	V12	B1	B2	B3	B4	B5	B8	B9	B10
	Preflow	N_2/N_2	Off	Off	**On**	Off	Off	Off	Off	Off	**On**	Off	**On**	**On**	Off	Off	Off	Off	Off	Off
	Cutflow	N_2/N_2	Off	Off	**On**	Off	Off	Off	Off	Off	**On**	Off	**On**	**On**	Off	Off	Off	Off	Off	Off
	Piercing	N_2/N_2	Off	Off	**On**	Off	Off	Off	Off	Off	**On**	Off	**On**	**On**	Off	Off	Off	Off	Off	Off
	Process IDs: 1205																			
	Block type	Gas	V1	V4	V5	V6	V7	V8	V9	V10	V11	V12	B1	B2	B3	B4	B5	B8	B9	B10
	Preflow	N_2/N_2	Off	Off	**On**	Off	Off	Off	**On**	Off	Off	Off	**On**	**On**	Off	Off	Off	Off	Off	Off
	Cutflow	O_2/N_2	**On**	Off	**On**	Off	Off	Off	**On**	Off	Off	**On**	Off	**On**	**On**	Off	Off	Off	Off	Off
	Piercing	O_2/Ar	**On**	**On**	Off	Off	Off	Off	**On**	Off	Off	**On**	Off	**On**	**On**	Off	Off	Off	Off	Off
	Process IDs: 1207																			
	Block type	Gas	V1	V4	V5	V6	V7	V8	V9	V10	V11	V12	B1	B2	B3	B4	B5	B8	B9	B10
	Preflow	N_2/Air	Off	Off	Off	**On**	Off	Off	**On**	Off	Off	Off	**On**	**On**	Off	Off	Off	Off	Off	Off
	Cutflow	O_2/Air	**On**	Off	Off	**On**	Off	Off	**On**	Off	Off	**On**	Off	**On**	**On**	Off	Off	Off	Off	Off
	Piercing	O_2/N_2	**On**	Off	**On**	Off	Off	Off	**On**	Off	Off	**On**	Off	**On**	**On**	Off	Off	Off	Off	Off

Table 41 - Valve states by process ID (continued)

	Process IDs: 9011, 9012, 9013																		
	Block type	Gas	V1	V4	V5	V6	V7	V8	V9	V10	V11	V12	B1	B2	B3	B4	B5	B8	B9	B10
	Preflow	Ar/N_2	Off	Off	**On**	Off	Off	**On**	Off	Off	**On**	Off	**On**	**On**	Off	Off	Off	Off	Off	Off
	Cutflow	Ar/N_2	Off	Off	**On**	Off	Off	**On**	Off	Off	Off	Off	**On**	**On**	Off	Off	Off	Off	Off	Off
	Piercing	Ar/N_2	Off	Off	**On**	Off	Off	**On**	Off	Off	Off	Off	**On**	**On**	Off	Off	Off	Off	Off	Off
	Process IDs: 1060, 1061, 7016, 7017																		
	Block type	Gas	V1	V4	V5	V6	V7	V8	V9	V10	V11	V12	B1	B2	B3	B4	B5	B8	B9	B10
	Preflow	N_2/Air	Off	Off	Off	**On**	Off	Off	**On**	Off	**On**	Off	**On**	**On**	Off	Off	Off	Off	Off	Off
	Cutflow	O_2/Air	**On**	Off	Off	**On**	Off	Off	**On**	Off	**On**	**On**	Off	**On**	**On**	Off	Off	Off	Off	Off
	Piercing	O_2/Air	**On**	Off	Off	**On**	Off	Off	**On**	Off	**On**	**On**	Off	**On**	**On**	Off	Off	Off	Off	Off
	Process IDs: 1157																		
	Block type	Gas	V1	V4	V5	V6	V7	V8	V9	V10	V11	V12	B1	B2	B3	B4	B5	B8	B9	B10
	Preflow	N_2/Air	Off	Off	Off	**On**	Off	Off	**On**	Off	Off	Off	**On**	**On**	Off	Off	Off	Off	Off	Off
	Cutflow	O_2/Air	**On**	Off	Off	**On**	Off	Off	**On**	Off	**On**	**On**	Off	**On**	**On**	Off	Off	Off	Off	Off
	Piercing	O_2/Ar	**On**	**On**	Off	Off	Off	Off	**On**	Off	Off	**On**	Off	**On**	**On**	Off	Off	Off	Off	Off

Table 41 - Valve states by process ID (continued)

	Process IDs: 7019																		
	Block type	Gas	V1	V4	V5	V6	V7	V8	V9	V10	V11	V12	B1	B2	B3	B4	B5	B8	B9	B10
	Preflow	N_2/O_2	Off	Off	Off	Off	**On**	Off	**On**	Off	**On**	Off	**On**	**On**	Off	Off	Off	Off	Off	Off
	Cutflow	O_2/O_2	**On**	Off	Off	Off	**On**	Off	**On**	Off	**On**	**On**	Off	**On**	**On**	Off	Off	Off	Off	Off
	Piercing	O_2/Air	**On**	Off	Off	**On**	Off	Off	**On**	Off	Off	**On**	Off	**On**	**On**	Off	Off	Off	Off	Off
	Process IDs: 1288																			
	Block type	Gas	V1	V4	V5	V6	V7	V8	V9	V10	V11	V12	B1	B2	B3	B4	B5	B8	B9	B10
	Preflow	N_2/Air	Off	Off	Off	**On**	Off	Off	**On**	Off	Off	Off	**On**	**On**	Off	Off	Off	Off	Off	Off
	Cutflow	O_2/Air	**On**	Off	Off	**On**	Off	Off	**On**	Off	Off	**On**	Off	**On**	**On**	Off	Off	Off	Off	Off
	Piercing	O_2/Ar	**On**	**On**	Off	Off	Off	Off	**On**	Off	Off	**On**	Off	**On**	**On**	Off	Off	Off	Off	Off
	Process IDs: 1289																			
	Block type	Gas	V1	V4	V5	V6	V7	V8	V9	V10	V11	V12	B1	B2	B3	B4	B5	B8	B9	B10
	Preflow	N_2/Air	Off	Off	Off	**On**	Off	Off	**On**	Off	Off	Off	**On**	**On**	Off	Off	Off	Off	Off	Off
	Cutflow	O_2/Ar	**On**	**On**	Off	Off	Off	Off	**On**	Off	Off	**On**	Off	**On**	**On**	Off	Off	Off	Off	Off
	Piercing	O_2/Ar	**On**	**On**	Off	Off	Off	Off	**On**	Off	Off	**On**	Off	**On**	**On**	Off	Off	Off	Off	Off

Table 41 - Valve states by process ID (continued)

	Process IDs: 2071, 2073, 2075																		
	Block type	Gas	V1	V4	V5	V6	V7	V8	V9	V10	V11	V12	B1	B2	B3	B4	B5	B8	B9	B10
	Preflow	N_2/N_2	Off	Off	**On**	Off	Off	Off	Off	**On**	Off	Off	**On**	**On**	Off	Off	Off	**On**	**On**	**On**
	Cutflow	Mix/N_2	**On**	Off	**On**	Off	Off	Off	Off	**On**	Off	**On**	Off	**On**	Off	Off	Off	**On**	**On**	**On**
	Piercing	Mix/N_2	**On**	Off	**On**	Off	Off	Off	Off	**On**	Off	**On**	Off	**On**	Off	Off	Off	**On**	**On**	**On**
	Process IDs: 2072, 2074																		
	Block type	Gas	V1	V4	V5	V6	V7	V8	V9	V10	V11	V12	B1	B2	B3	B4	B5	B8	B9	B10
	Preflow	N_2/N_2	Off	Off	**On**	Off	Off	Off	Off	**On**	Off	Off	**On**	**On**	Off	Off	Off	**On**	**On**	**On**
	Cutflow	Mix/N_2	**On**	Off	**On**	Off	Off	Off	Off	**On**	Off	**On**	Off	**On**	Off	Off	Off	**On**	**On**	**On**
	Piercing	Mix/Ar	**On**	Off	**On**	Off	Off	Off	Off	**On**	Off	**On**	Off	**On**	Off	Off	Off	**On**	**On**	**On**
	Process IDs: 2076																		
	Block type	Gas	V1	V4	V5	V6	V7	V8	V9	V10	V11	V12	B1	B2	B3	B4	B5	B8	B9	B10
	Preflow	N_2/Ar	Off	Off	**On**	Off	Off	Off	Off	**On**	Off	Off	**On**	**On**	Off	Off	Off	**On**	**On**	**On**
	Cutflow	Mix/Ar	**On**	Off	**On**	Off	Off	Off	Off	**On**	Off	**On**	Off	**On**	Off	Off	Off	**On**	**On**	**On**
	Piercing	Mix/Ar	**On**	Off	**On**	Off	Off	Off	Off	**On**	Off	**On**	Off	**On**	Off	Off	Off	**On**	**On**	**On**

Table 41 - Valve states by process ID (continued)

	Process IDs: 8011																		
	Block type	Gas	V1	V4	V5	V6	V7	V8	V9	V10	V11	V12	B1	B2	B3	B4	B5	B8	B9	B10
	Preflow	N_2/N_2	Off	Off	**On**	Off	Off	Off	Off	Off	**On**	Off	**On**	**On**	Off	Off	Off	Off	Off	Off
	Cutflow	N_2/N_2	Off	Off	**On**	Off	Off	Off	Off	Off	**On**	Off	**On**	**On**	Off	Off	Off	Off	Off	Off
	Piercing	N_2/N_2	Off	Off	**On**	Off	Off	Off	Off	Off	Off	Off	**On**	**On**	Off	Off	Off	Off	Off	Off
	Process IDs: 9020, 9021																			
	Block type	Gas	V1	V4	V5	V6	V7	V8	V9	V10	V11	V12	B1	B2	B3	B4	B5	B8	B9	B10
	Preflow	Ar/N_2	Off	Off	**On**	Off	Off	**On**	Off	Off	**On**	Off	**On**	**On**	Off	Off	Off	Off	Off	Off
	Cutflow	Ar/N_2	Off	Off	**On**	Off	Off	**On**	Off	Off	**On**	Off	**On**	**On**	Off	Off	Off	Off	Off	Off
	Piercing	Ar/N_2	Off	Off	**On**	Off	Off	**On**	Off	Off	Off	Off	**On**	**On**	Off	Off	Off	Off	Off	Off
	Process IDs: 3001, 3006																			
	Block type	Gas	V1	V4	V5	V6	V7	V8	V9	V10	V11	V12	B1	B2	B3	B4	B5	B8	B9	B10
	Preflow	N_2/Air	Off	Off	Off	**On**	Off	Off	**On**	Off	Off	Off	**On**	**On**	Off	Off	Off	Off	Off	Off
	Cutflow	O_2/Air	**On**	Off	Off	**On**	Off	Off	**On**	Off	Off	**On**	Off	**On**	**On**	Off	Off	Off	Off	Off
	Piercing	O_2/N_2	**On**	Off	**On**	Off	Off	Off	**On**	Off	Off	**On**	Off	**On**	**On**	Off	Off	Off	Off	Off

Table 41 - Valve states by process ID (continued)

	Process ID: 3011																		
	Block type	Gas	V1	V4	V5	V6	V7	V8	V9	V10	V11	V12	B1	B2	B3	B4	B5	B8	B9	B10
	Preflow	N_2/Air	Off	Off	Off	**On**	Off	Off	**On**	Off	**On**	**On**	**On**	**On**	Off	Off	Off	Off	Off	Off
	Cutflow	O_2/Air	**On**	Off	Off	**On**	Off	Off	**On**	Off	**On**	**On**	**On**	**On**	**On**	Off	Off	Off	Off	Off
	Piercing	O_2/N_2	**On**	Off	**On**	Off	Off	Off	**On**	Off	**On**	**On**	Off	**On**	**On**	Off	Off	Off	Off	Off
	Process IDs: 3012																		
	Block type	Gas	V1	V4	V5	V6	V7	V8	V9	V10	V11	V12	B1	B2	B3	B4	B5	B8	B9	B10
	Preflow	N_2/Air	Off	Off	Off	**On**	Off	Off	**On**	Off	Off	Off	**On**	**On**	Off	Off	Off	Off	Off	Off
	Cutflow	O_2/Air	**On**	Off	Off	**On**	Off	Off	**On**	Off	Off	**On**	Off	**On**	**On**	Off	Off	Off	Off	Off
	Piercing	O_2/N_2	**On**	Off	**On**	Off	Off	Off	**On**	Off	Off	**On**	Off	**On**	**On**	Off	Off	Off	Off	Off
	Process ID: 3016																		
	Block type	Gas	V1	V4	V5	V6	V7	V8	V9	V10	V11	V12	B1	B2	B3	B4	B5	B8	B9	B10
	Preflow	N_2/N_2	Off	Off	**On**	Off	Off	Off	Off	**On**	Off	Off	**On**	**On**	Off	Off	Off	**On**	**On**	**On**
	Cutflow	Mix/N_2	**On**	Off	**On**	Off	Off	Off	Off	**On**	Off	**On**	Off	**On**	Off	Off	Off	**On**	**On**	**On**
	Piercing	Mix/N_2	**On**	Off	**On**	Off	Off	Off	Off	**On**	Off	**On**	Off	**On**	Off	Off	Off	**On**	**On**	**On**

Table 41 - Valve states by process ID (continued)

	Process ID: 3021																		
	Block type	Gas	V1	V4	V5	V6	V7	V8	V9	V10	V11	V12	B1	B2	B3	B4	B5	B8	B9	B10
	Preflow	N_2/N_2	Off	Off	**On**	Off	Off	Off	Off	**On**	Off	Off	**On**	**On**	Off	Off	Off	**On**	**On**	**On**
	Cutflow	Mix/N_2	**On**	Off	**On**	Off	Off	Off	Off	**On**	Off	**On**	Off	**On**	Off	Off	Off	**On**	**On**	**On**
	Piercing	Mix/N_2	**On**	Off	**On**	Off	Off	Off	Off	**On**	Off	**On**	Off	**On**	Off	Off	Off	**On**	**On**	**On**
	Process ID: 3026																		
	Block type	Gas	V1	V4	V5	V6	V7	V8	V9	V10	V11	V12	B1	B2	B3	B4	B5	B8	B9	B10
	Preflow	N_2/N_2	Off	Off	**On**	Off	Off	Off	Off	**On**	Off	Off	**On**	**On**	Off	Off	Off	**On**	**On**	**On**
	Cutflow	Mix/N_2	**On**	Off	**On**	Off	Off	Off	Off	**On**	Off	**On**	Off	**On**	Off	Off	Off	**On**	**On**	**On**
	Piercing	Mix/N_2	**On**	Off	**On**	Off	Off	Off	Off	**On**	Off	**On**	Off	**On**	Off	Off	Off	**On**	**On**	**On**
	Process ID: 2082																		
	Block type	Gas	V1	V4	V5	V6	V7	V8	V9	V10	V11	V12	B1	B2	B3	B4	B5	B8	B9	B10
	Preflow	N_2/H_2O	Off	Off	Off	Off	Off	Off	Off	Off	Off	Off	**On**	**On**	Off	Off	**On**	Off	Off	Off
	Cutflow	N_2/H_2O	Off	Off	Off	Off	Off	Off	Off	Off	Off	Off	**On**	**On**	Off	Off	**On**	Off	Off	Off
	Piercing	N_2/H_2O	Off	Off	Off	Off	Off	Off	Off	Off	Off	Off	**On**	**On**	Off	Off	**On**	Off	Off	Off

Overview (Sheet 1 of 23)

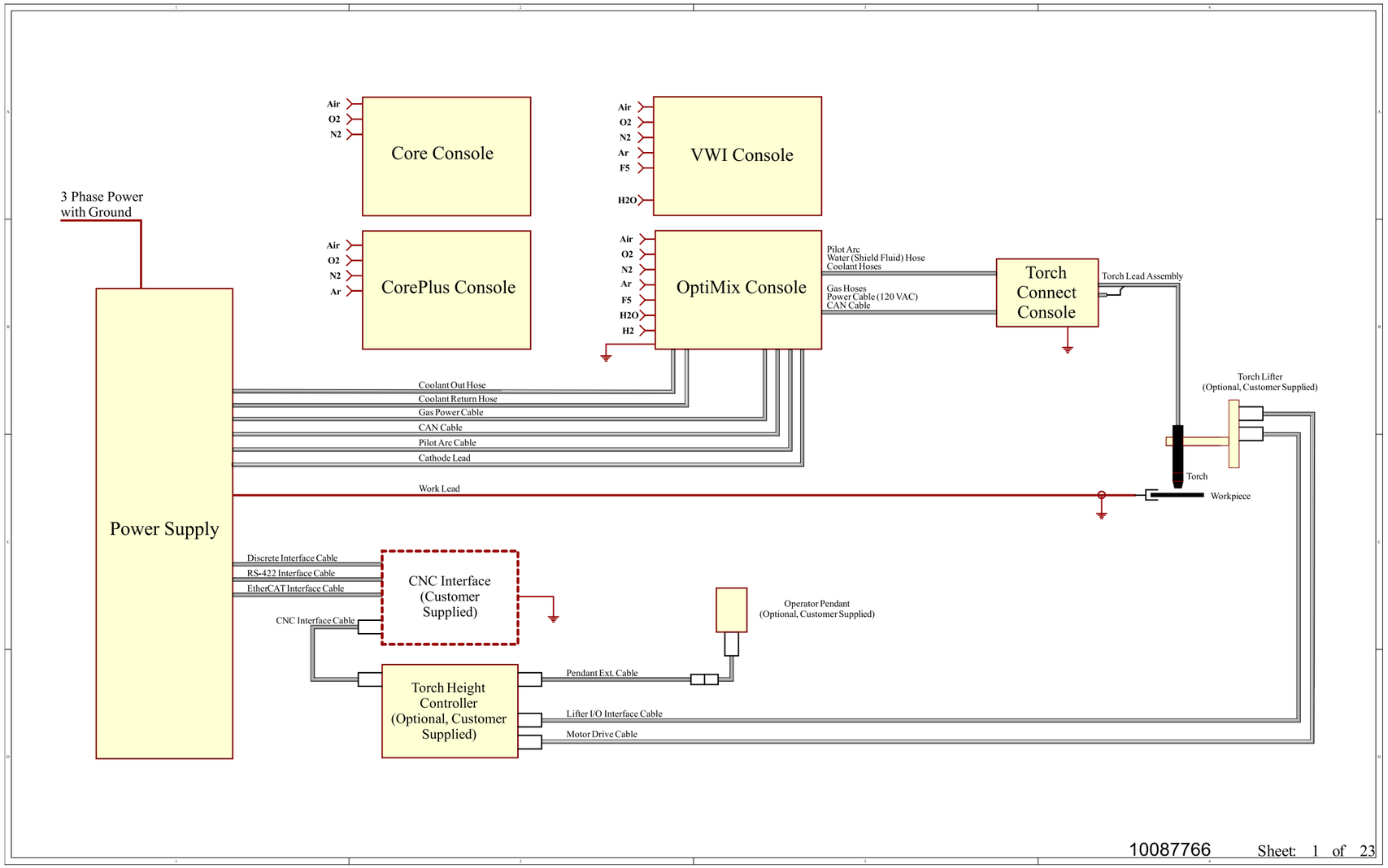

Plasma power supply 1 (Sheet 2 of 23)

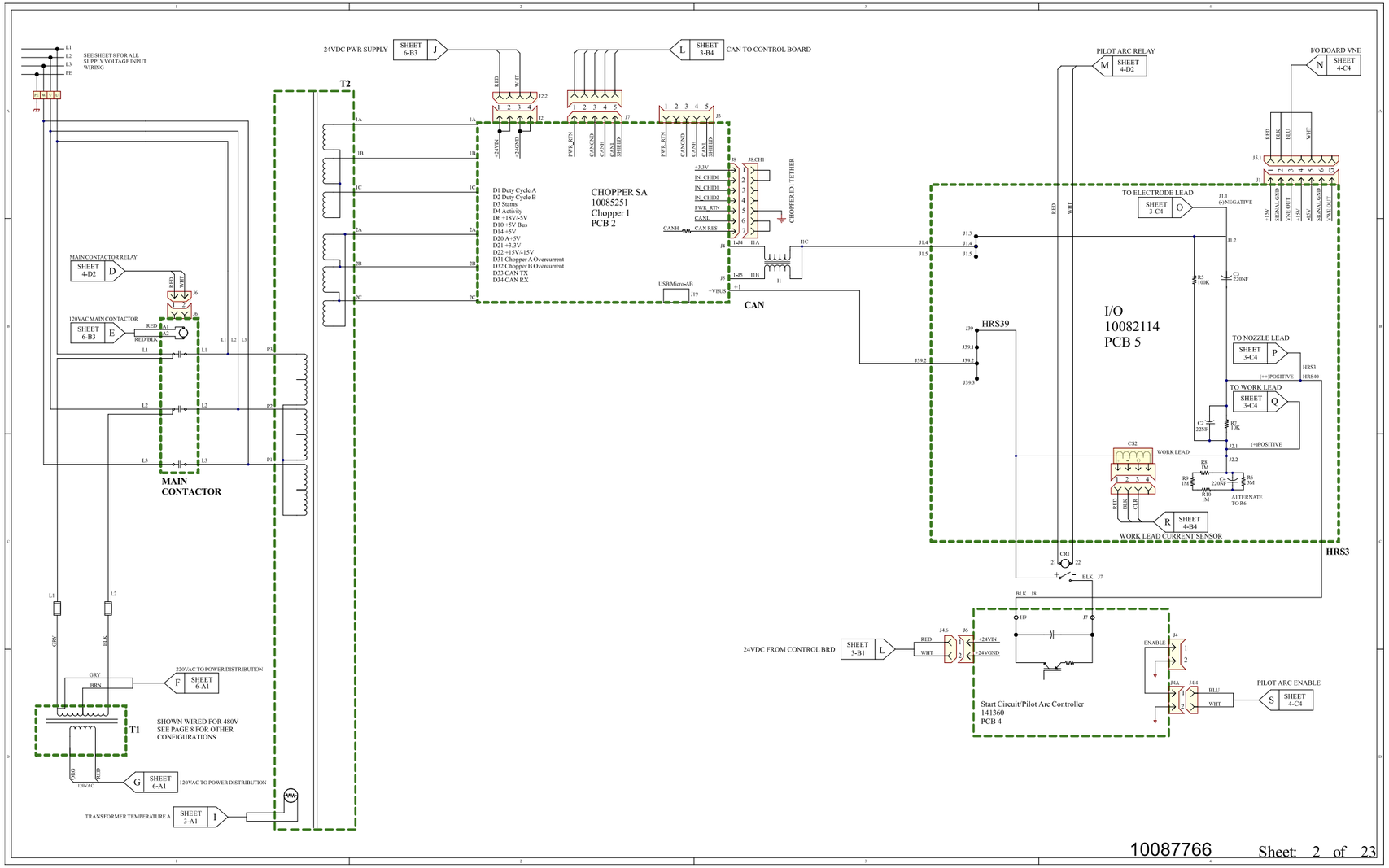

Plasma power supply 2 (Sheet 3 of 23)

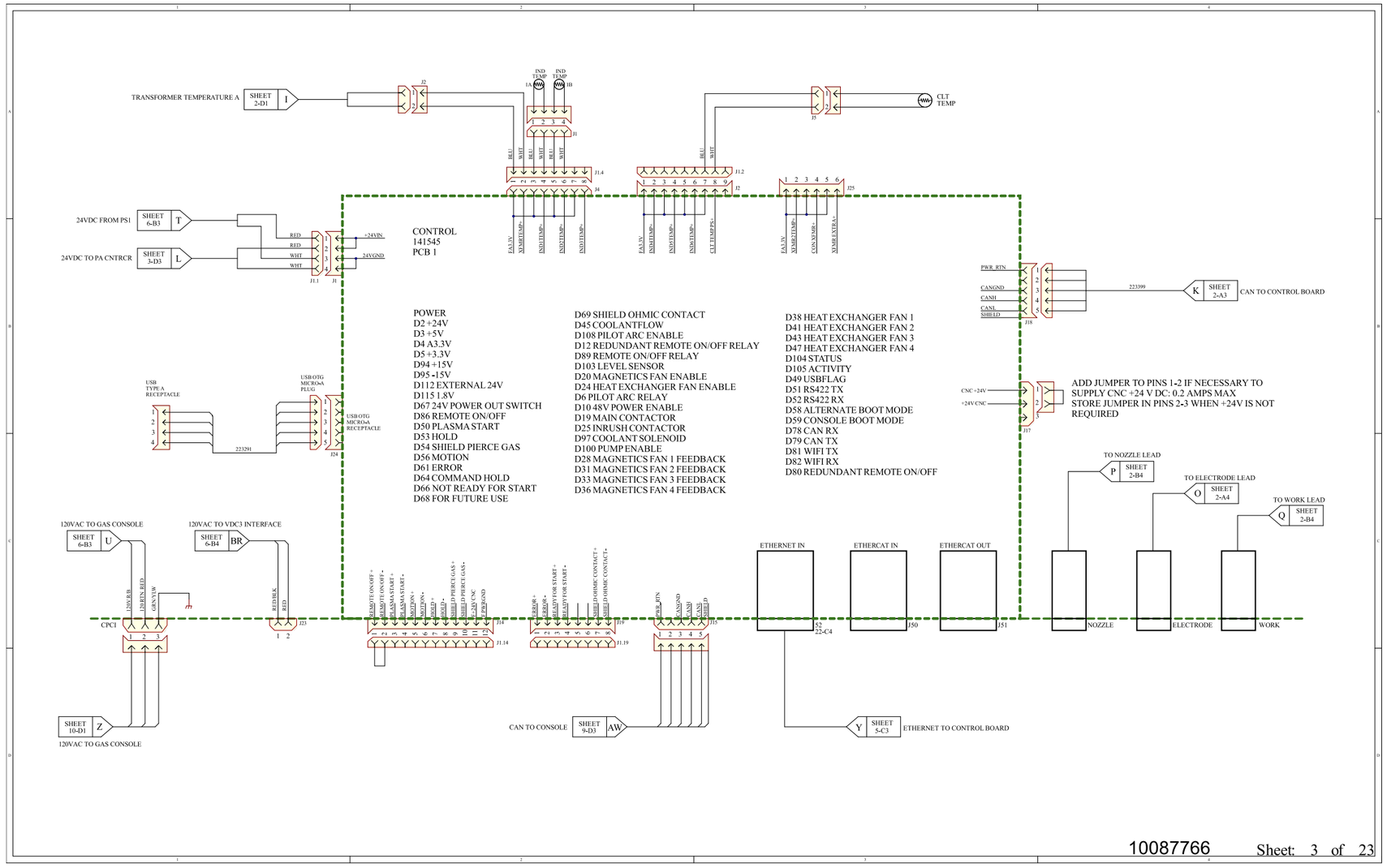

10087766 Sheet: 3 of 23

Plasma power supply 3 (Sheet 4 of 23)

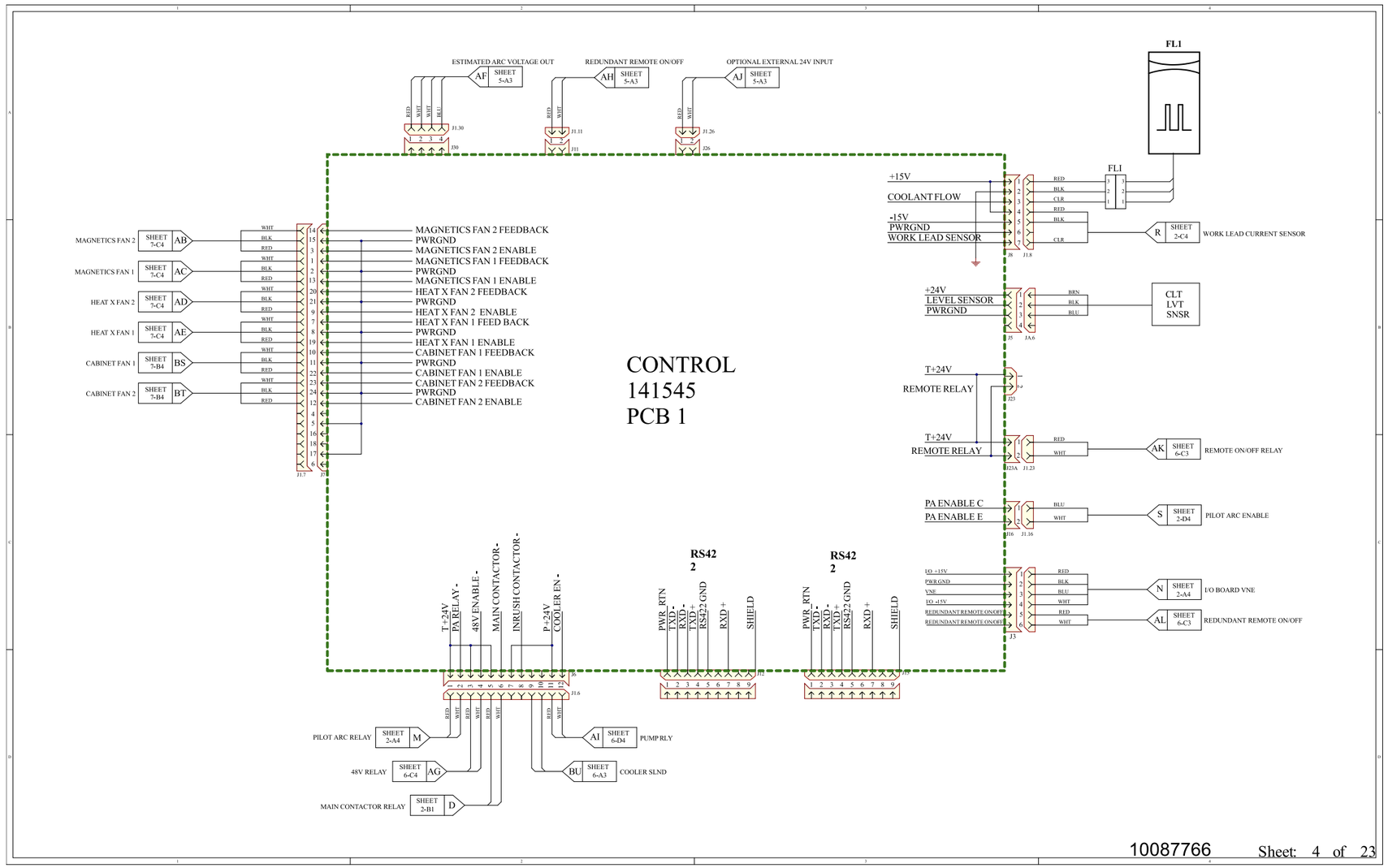

Plasma power supply 4 (Sheet 5 of 23)

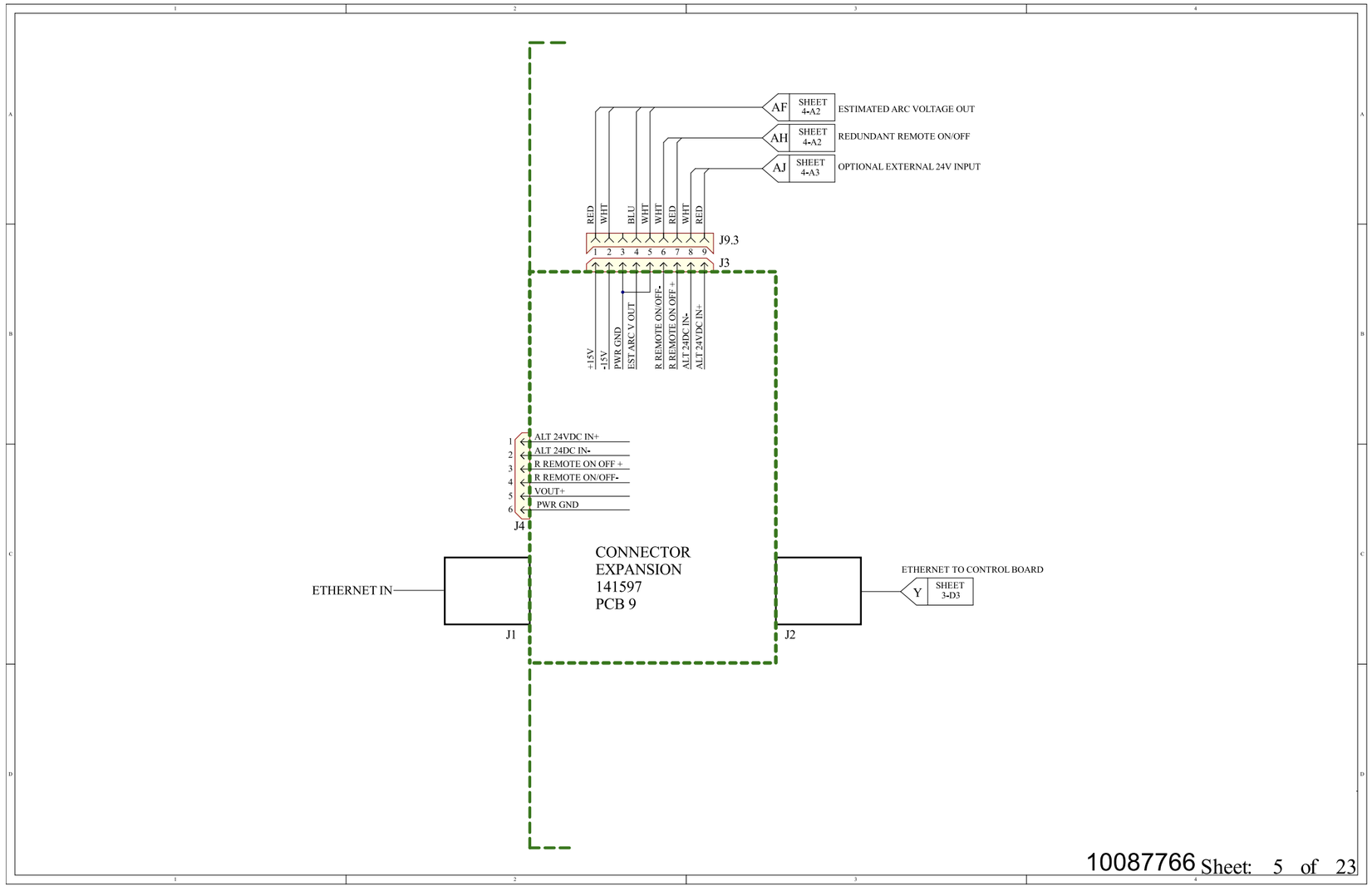

Plasma power supply 5 (Sheet 6 of 23)

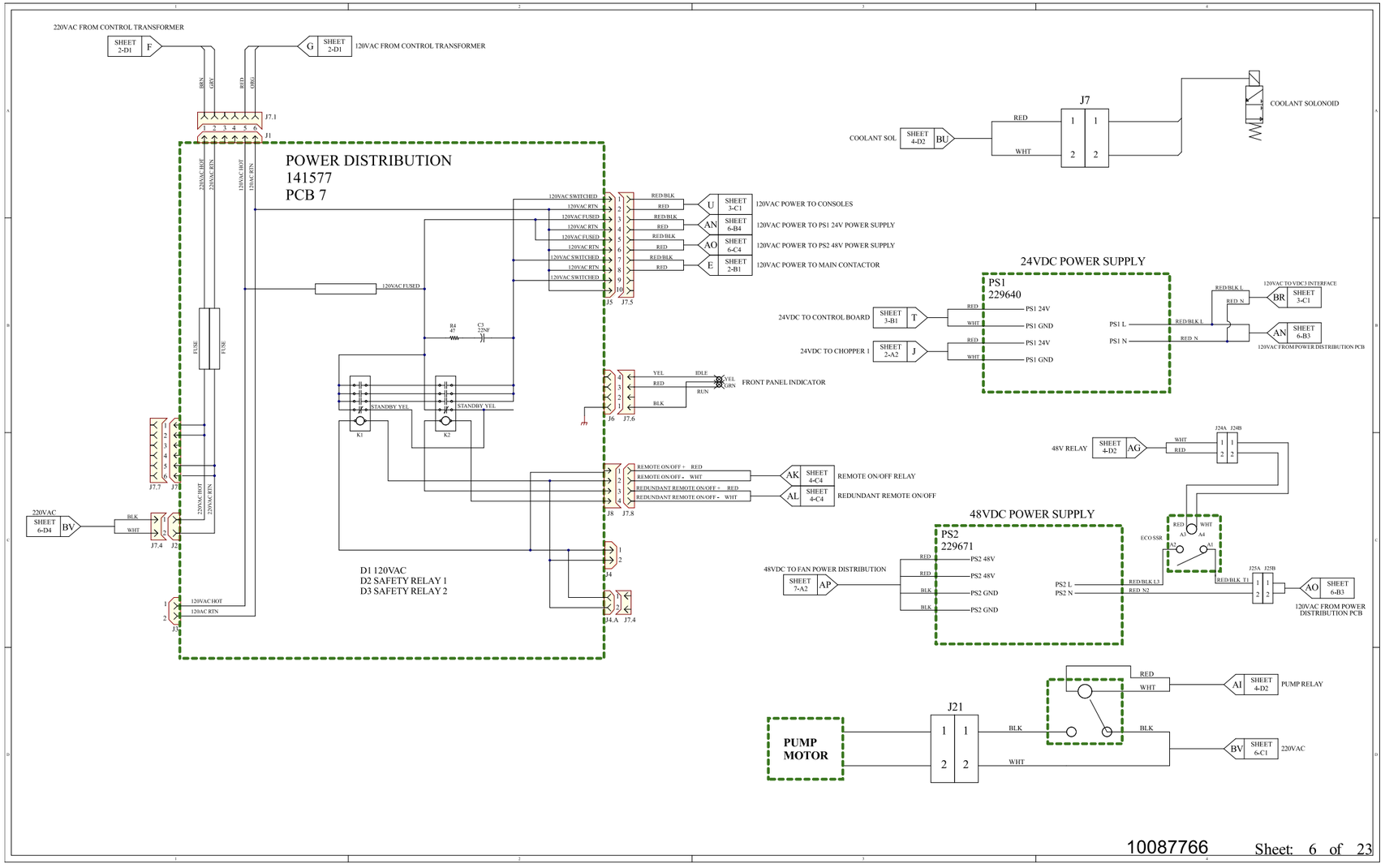

Plasma power supply 6 (Sheet 7 of 23)

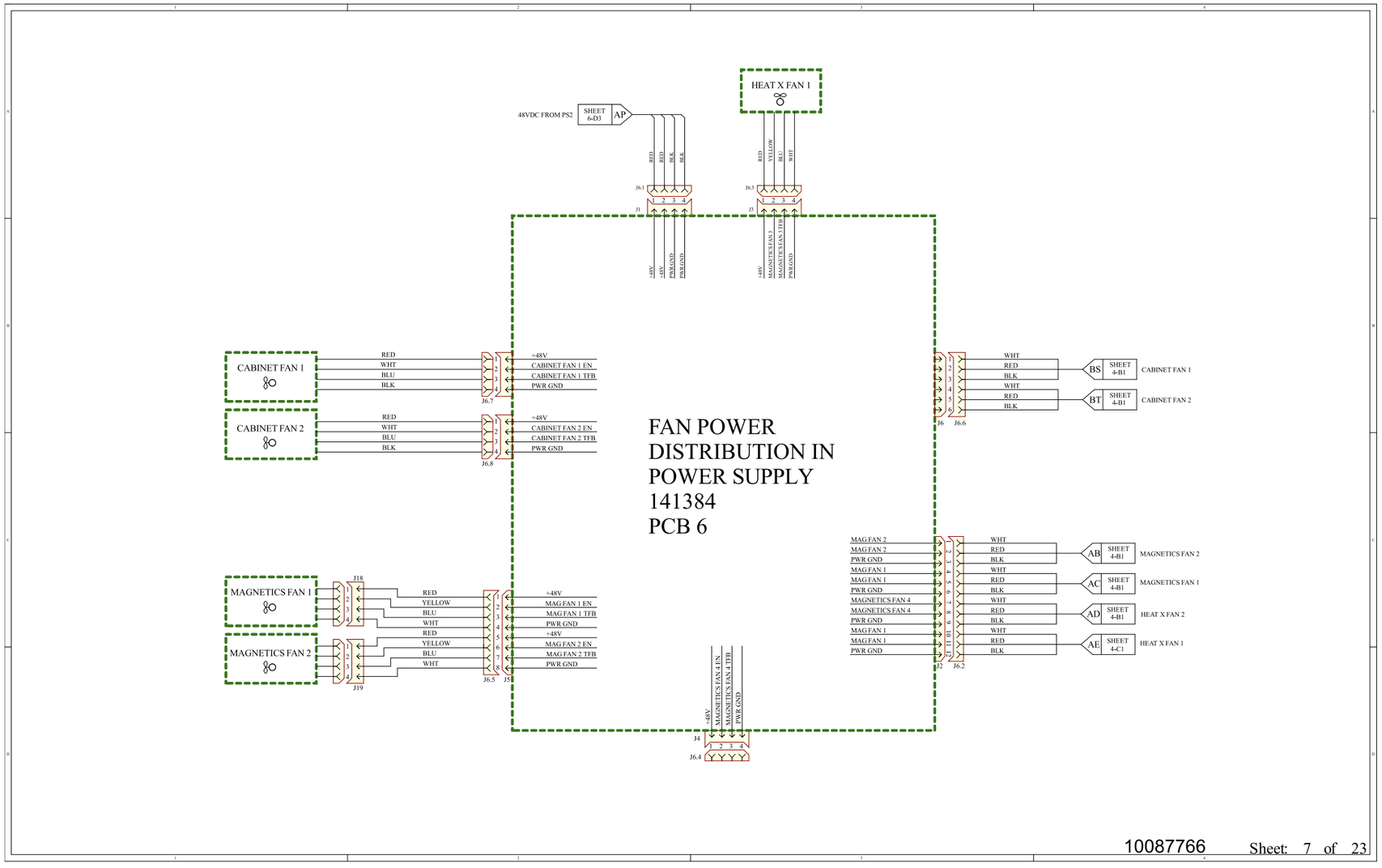

Plasma power supply 7 (Sheet 8 of 23)

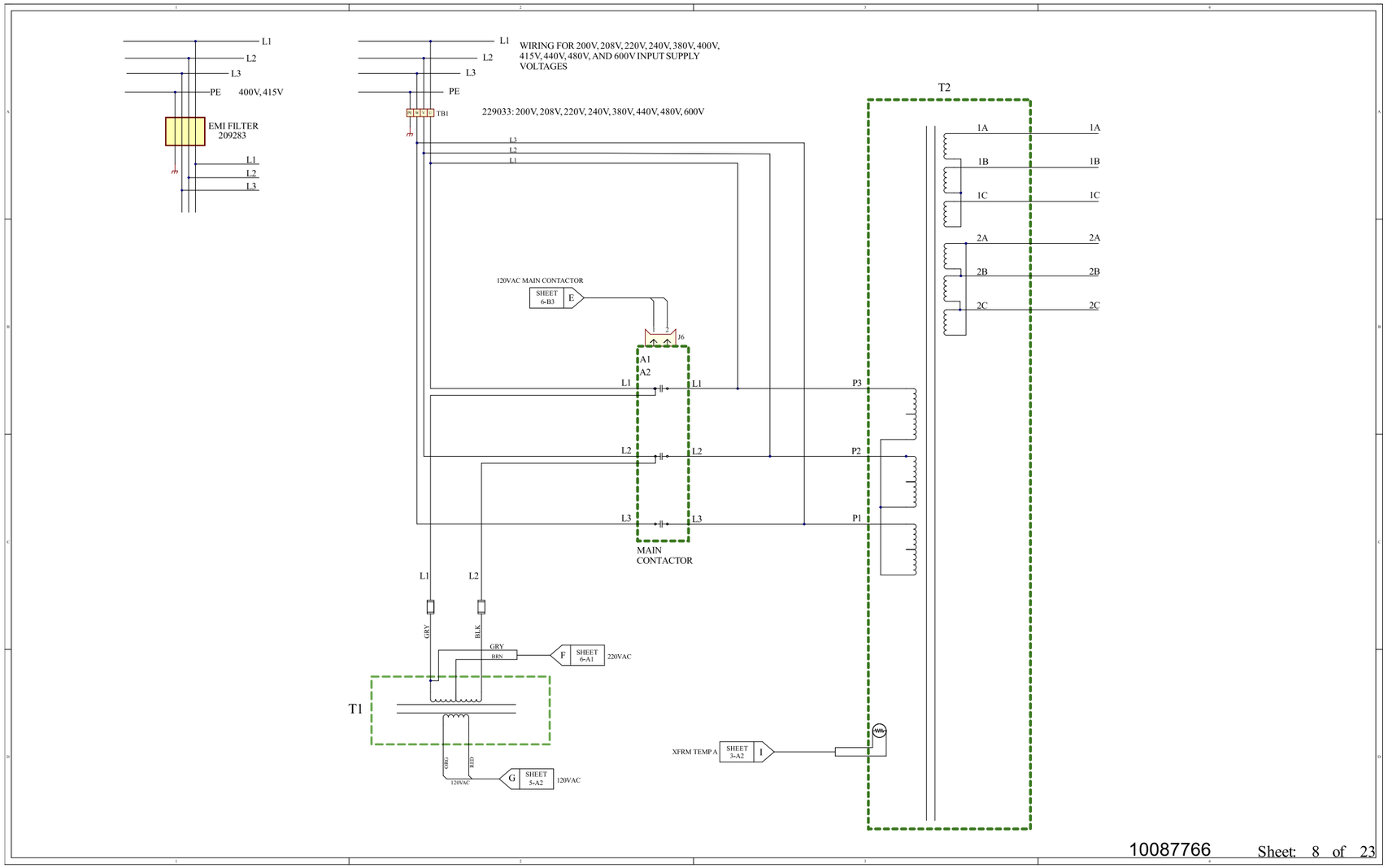

Gas connect console 1 (Sheet 9 of 23)

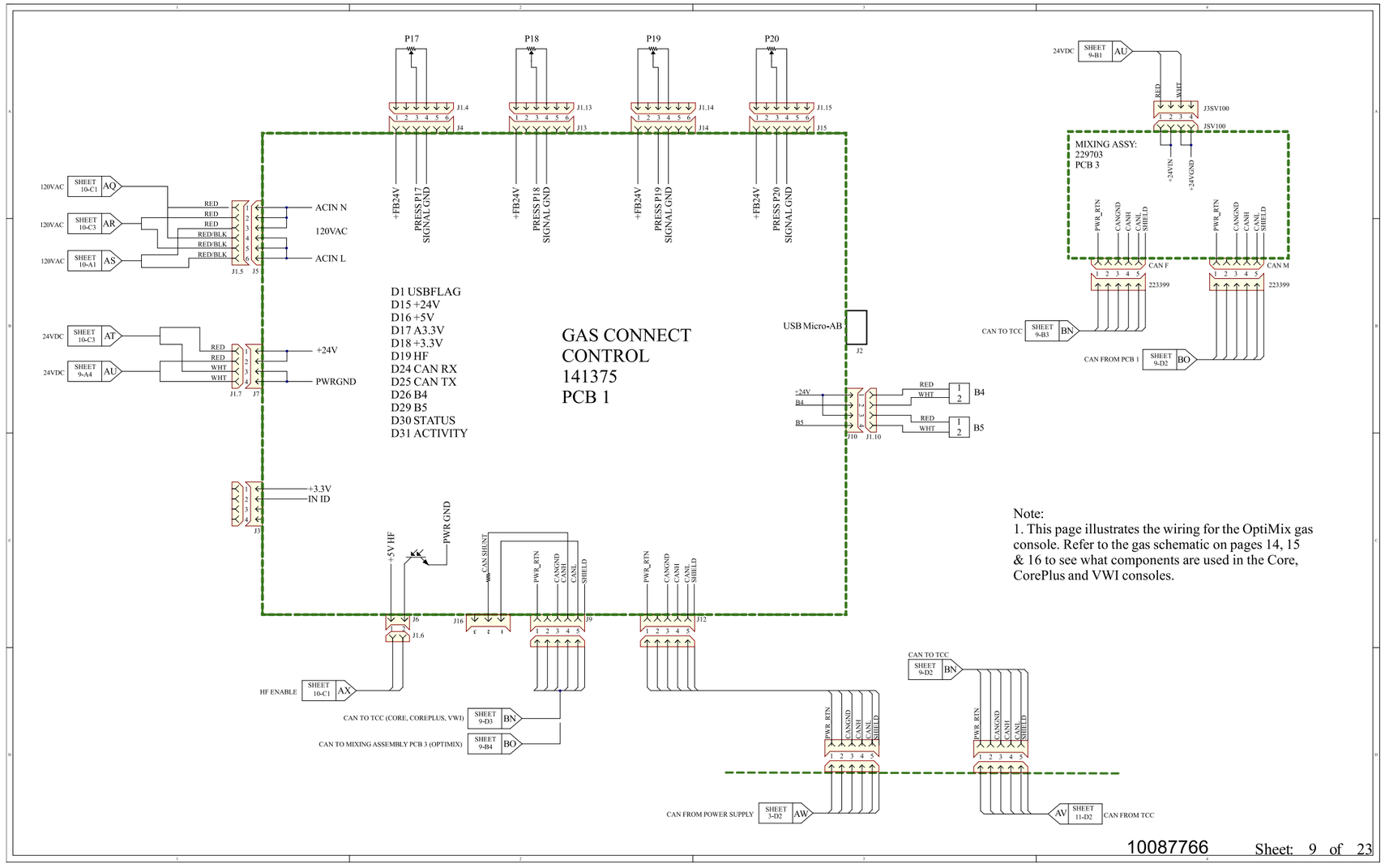

Gas connect console 2 (Sheet 10 of 23)

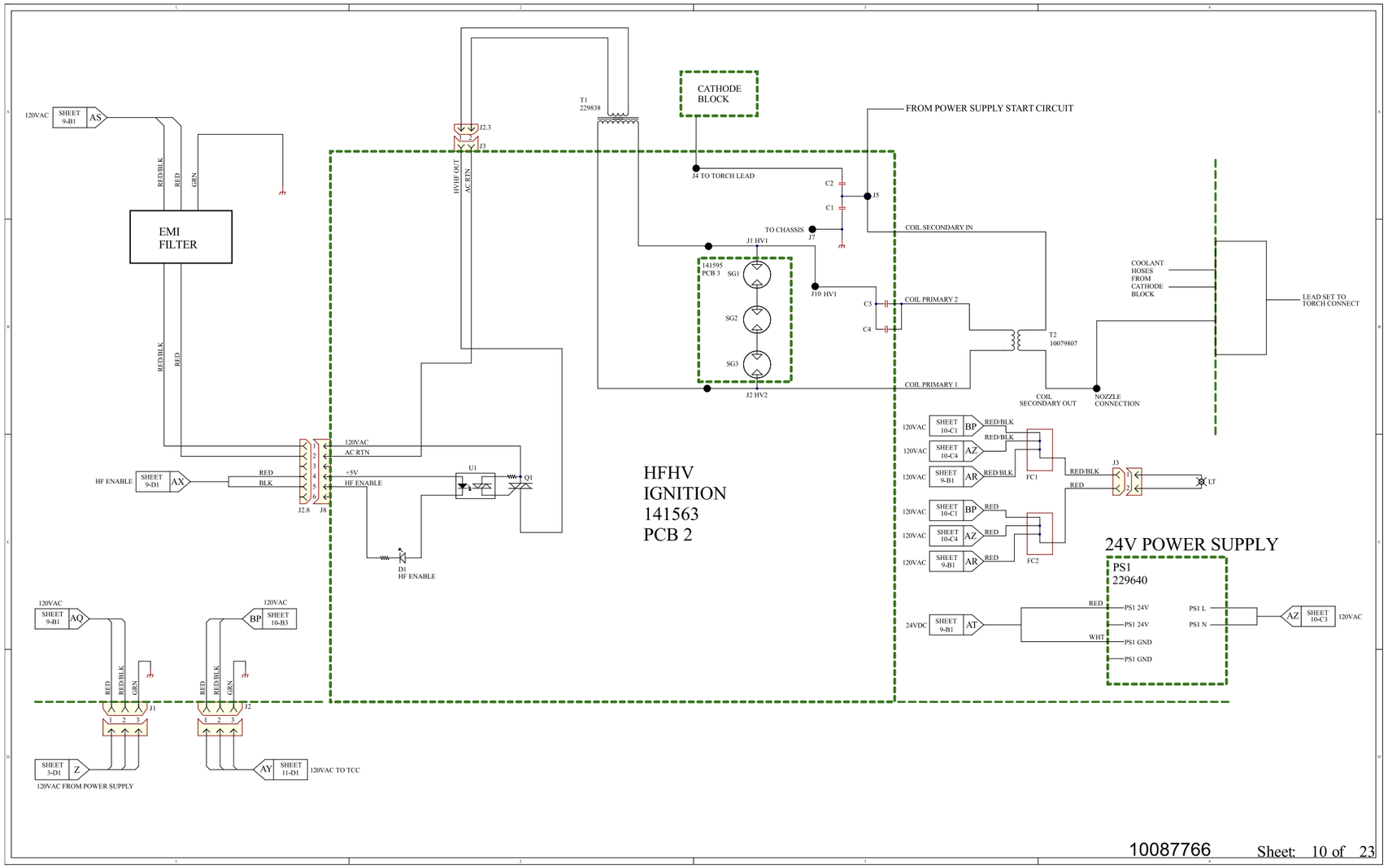

TorchConnect console (Sheet 11 of 23)

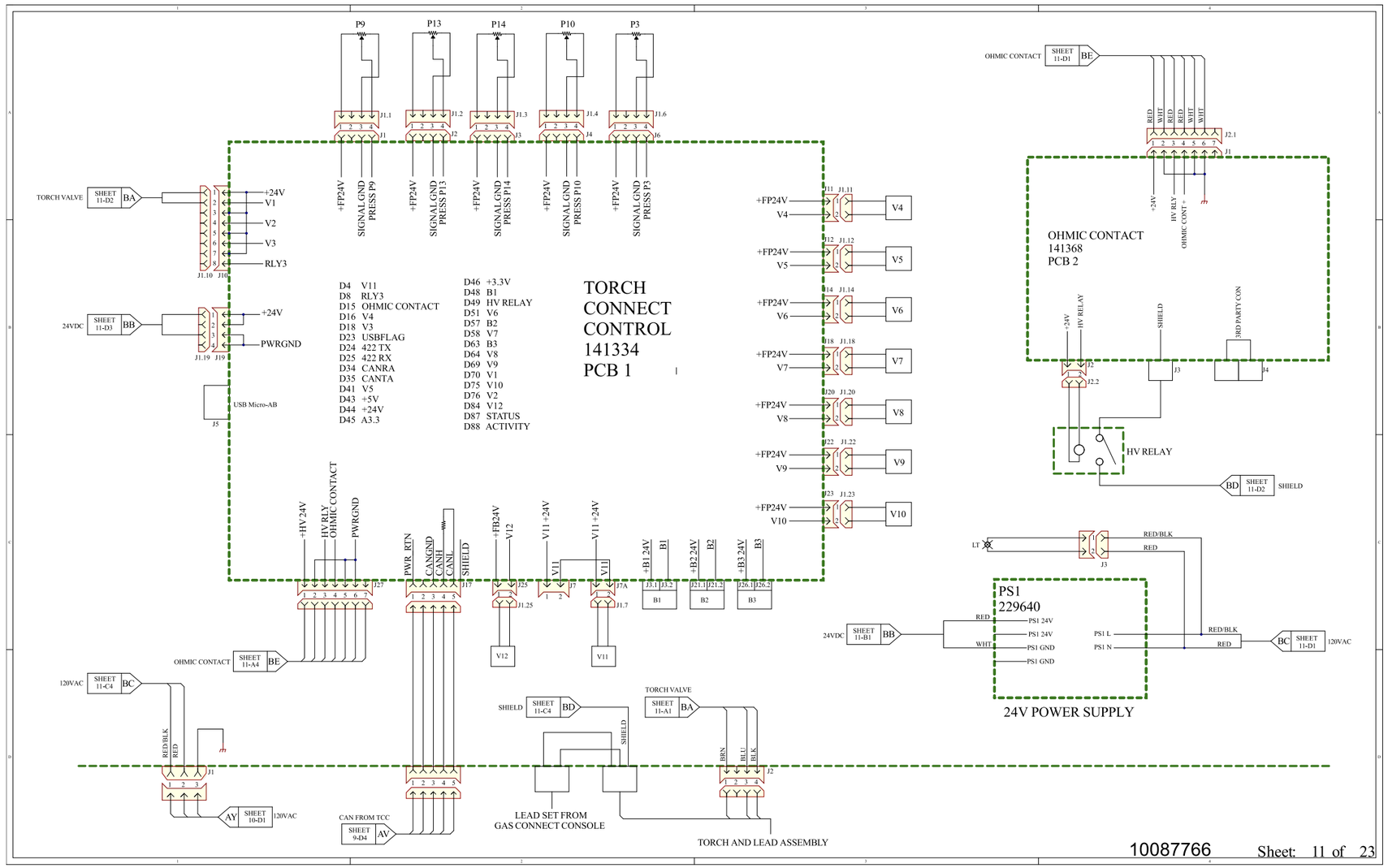

Coolant system (Sheet 12 of 23)

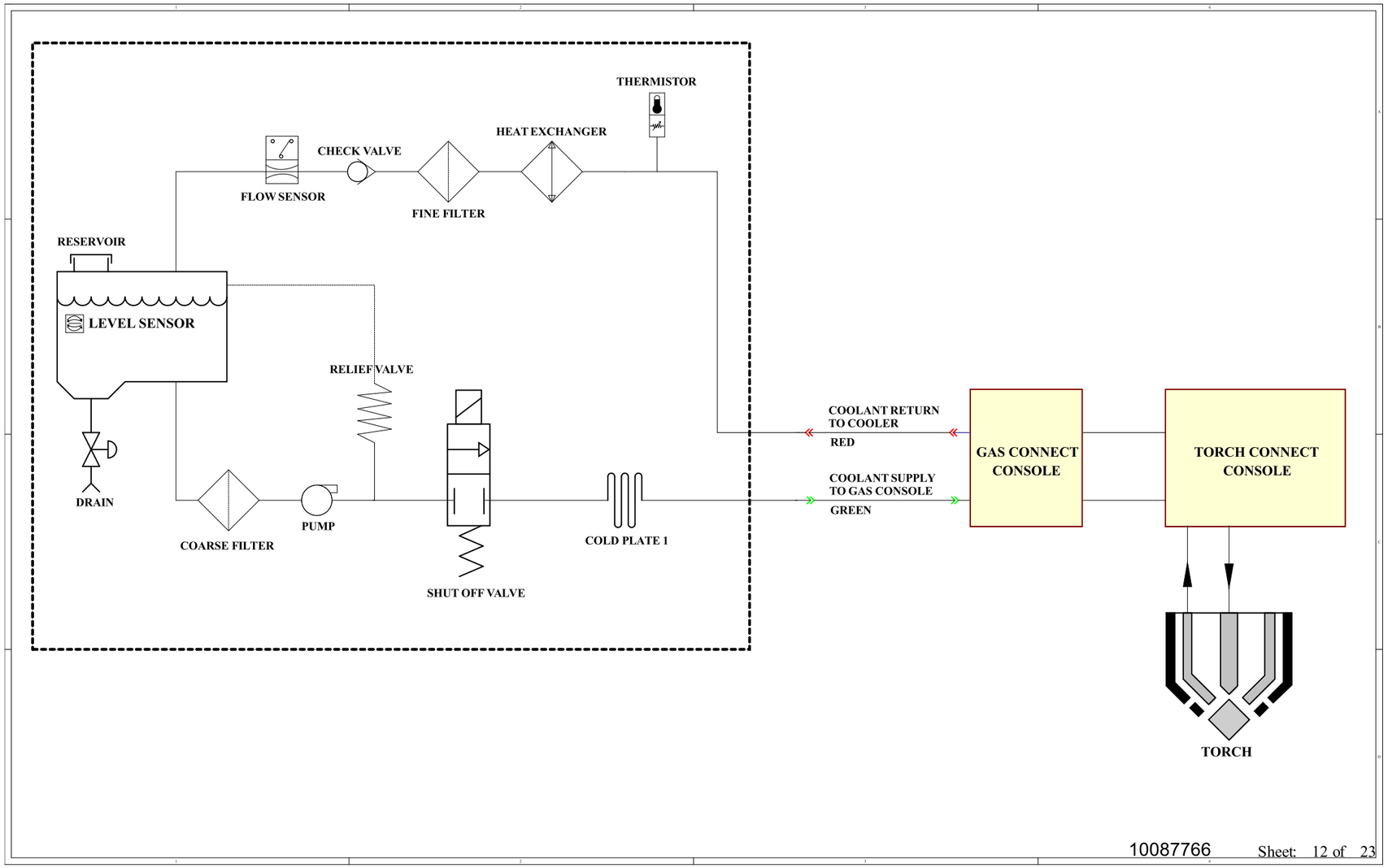

Gas system 1 Core (Sheet 13 of 23)

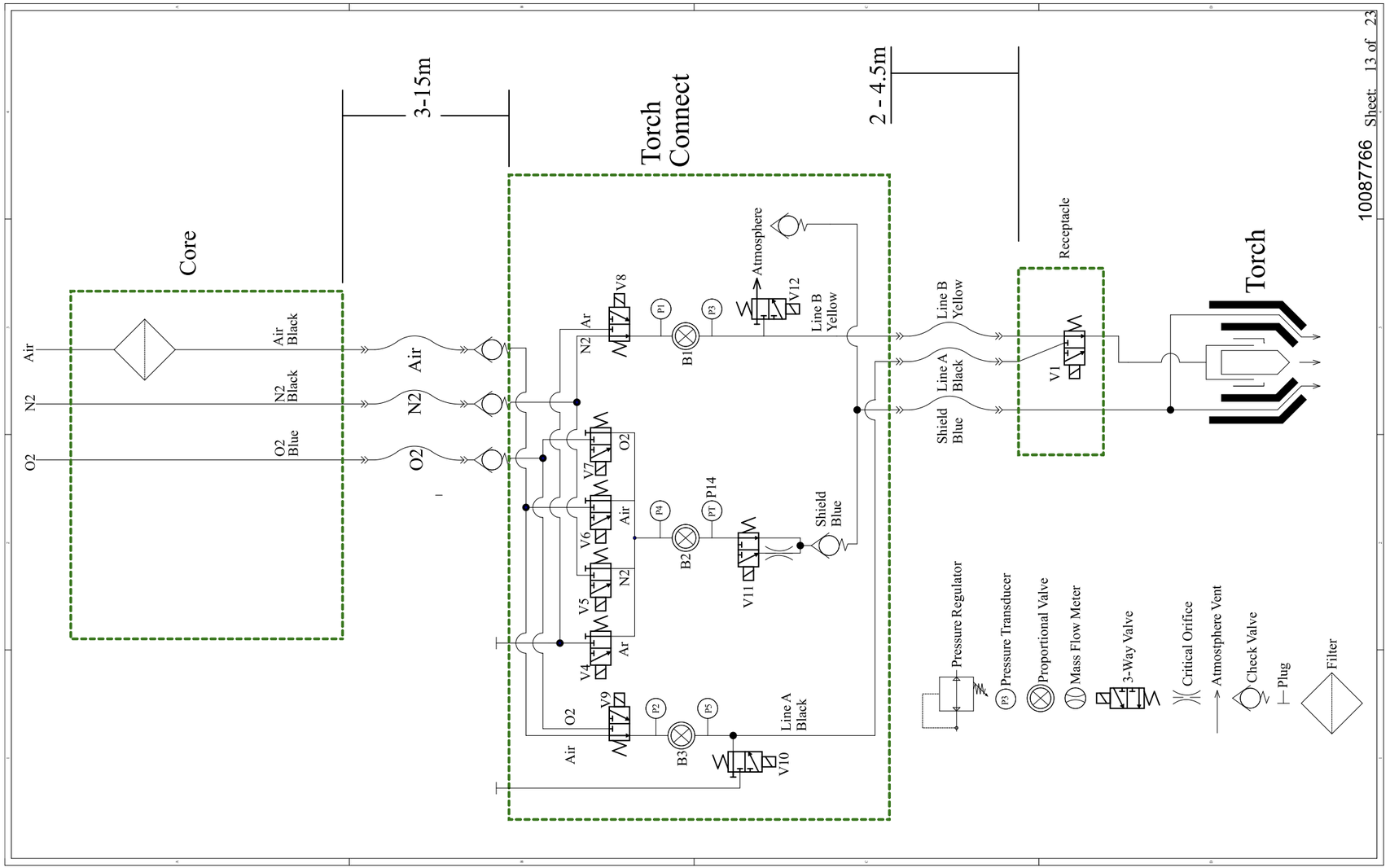

Gas system 2 CorePlus (Sheet 14 of 23)

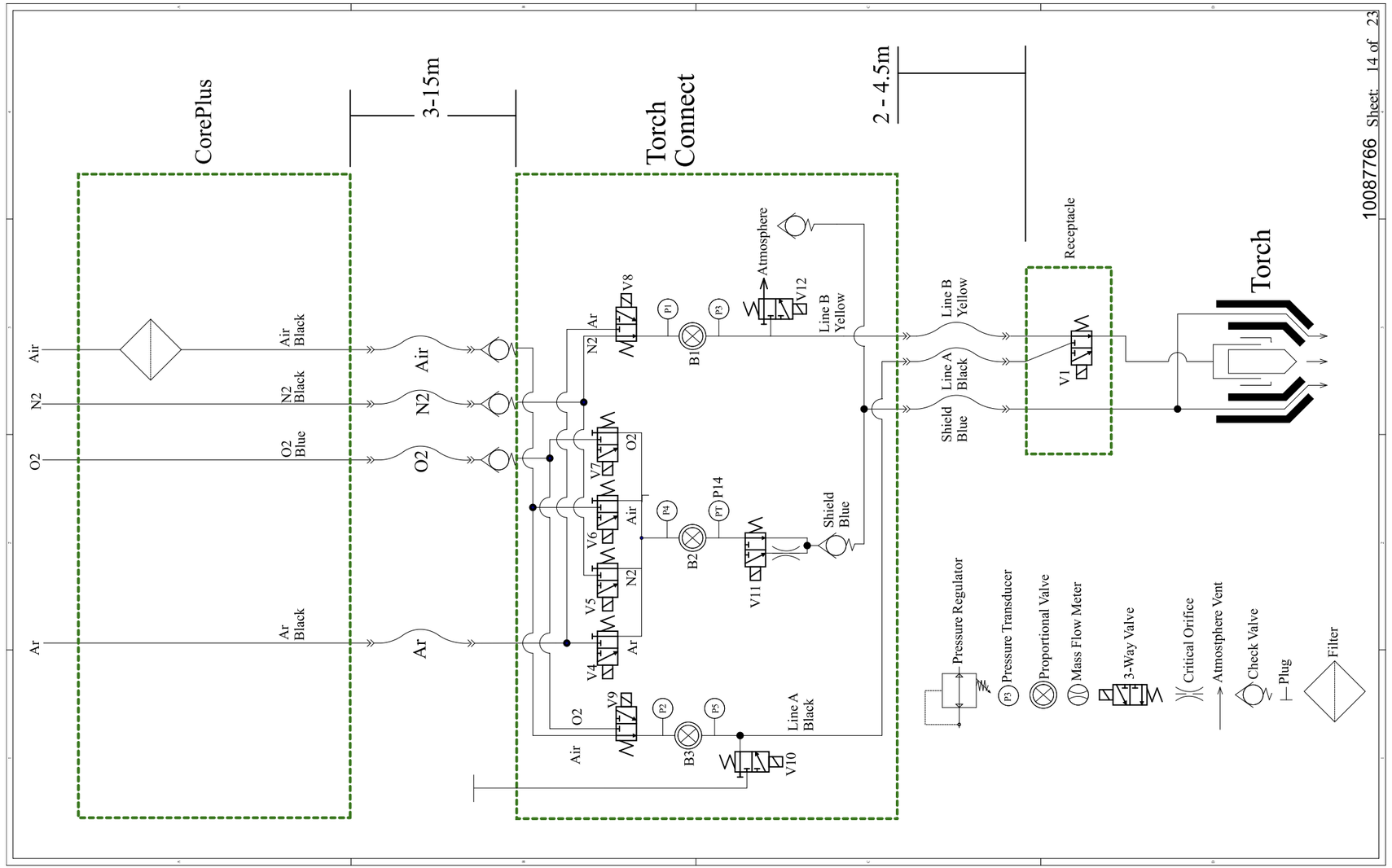

Gas system 3 VWI (Sheet 15 of 23)

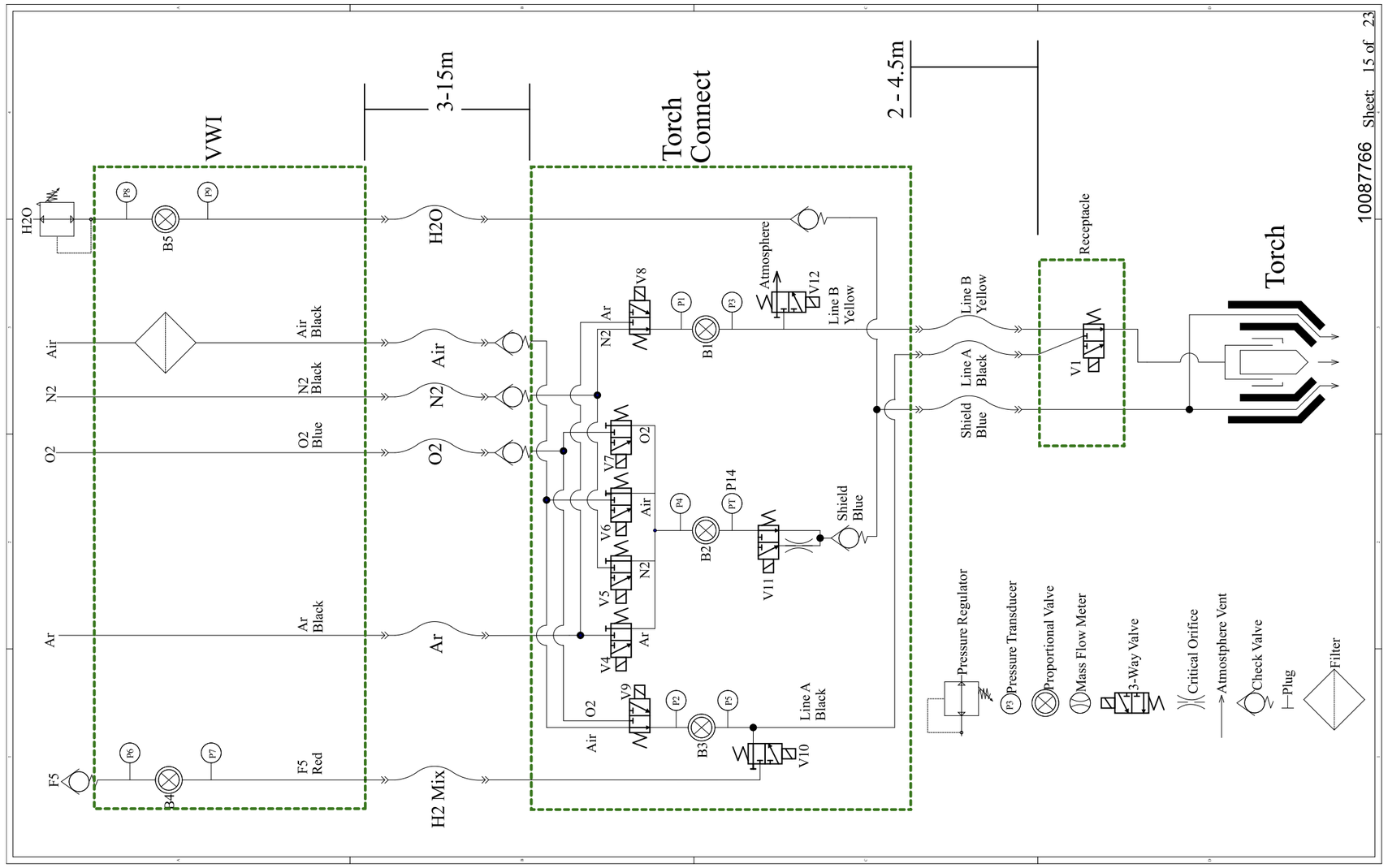

Gas system 4 OptiMix (Sheet 16 of 23)

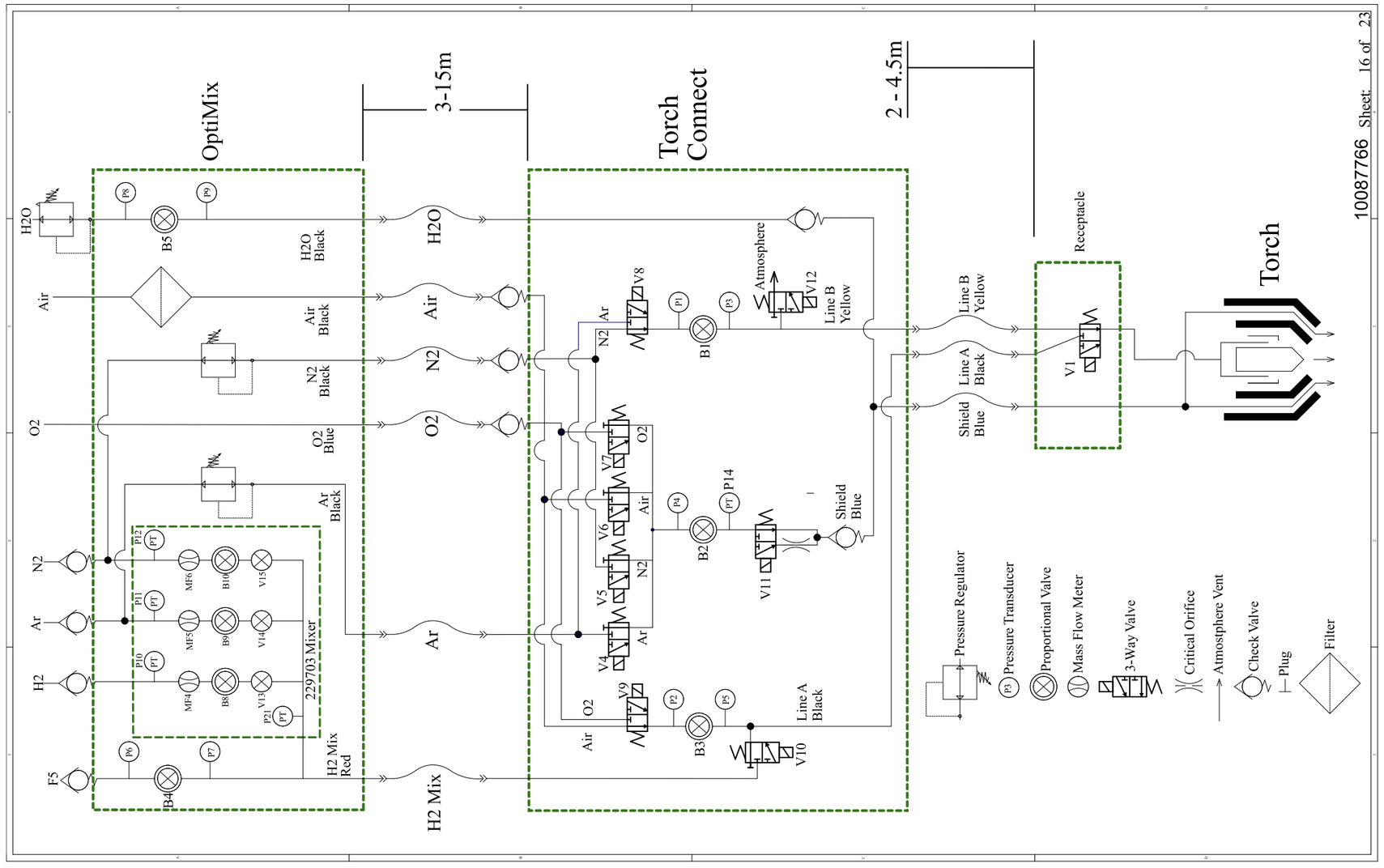

EtherCAT multi-drop (multi-system) interface (Sheet 17 of 23)

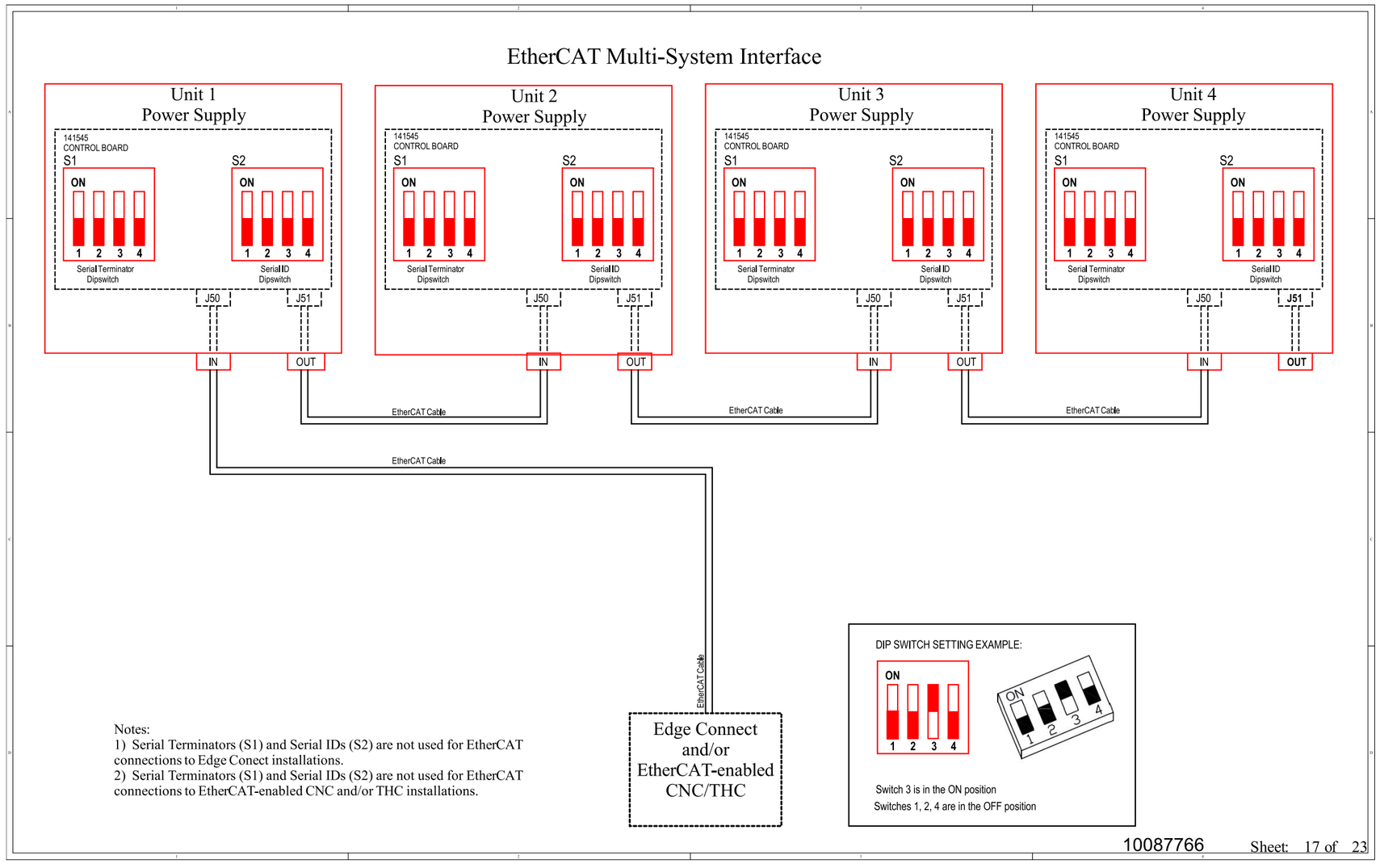

Serial RS-422 and discrete multi-drop (multi-system) interface (Sheet 18 of 23)

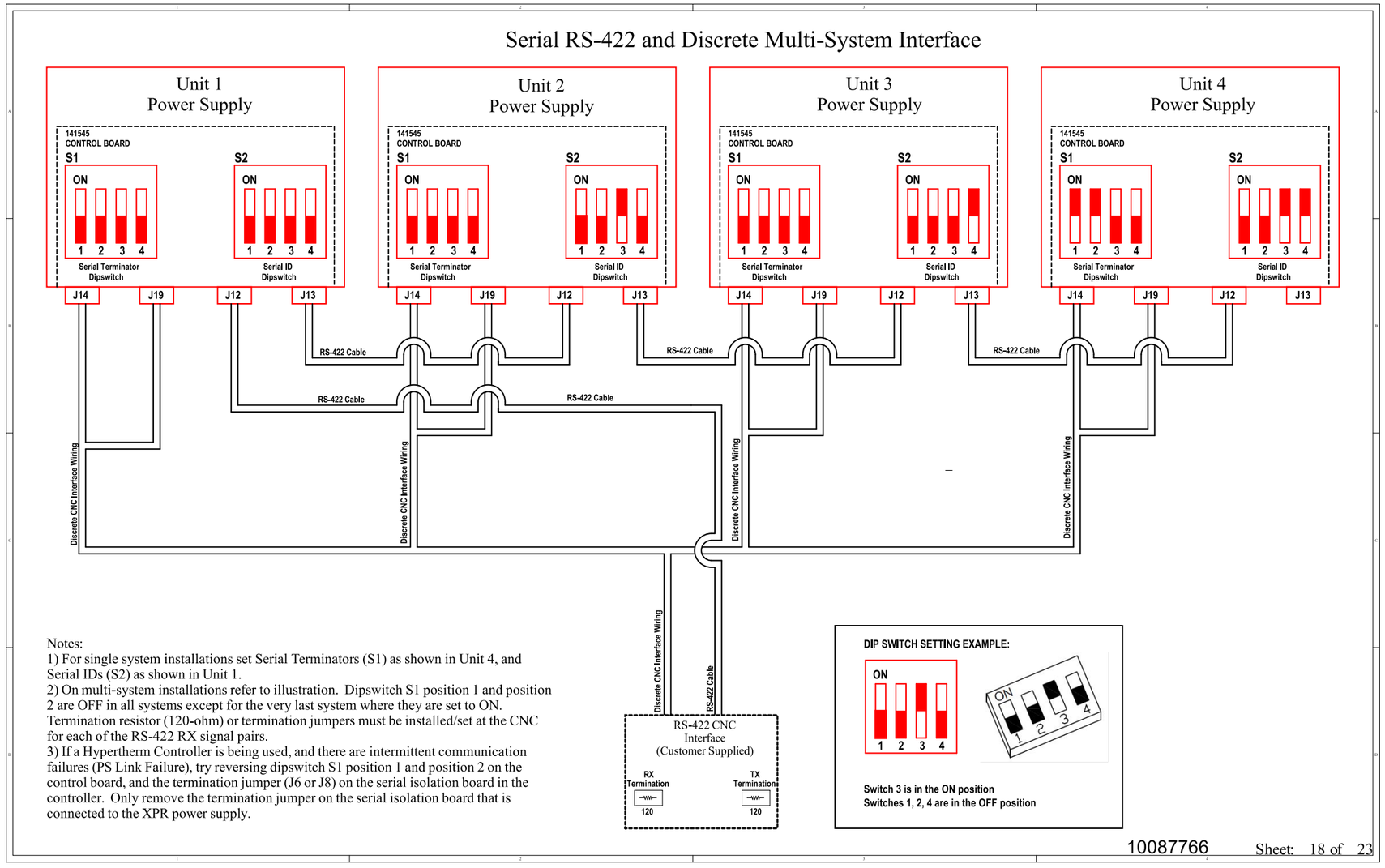

Discrete multi-drop (multi-system) interface (Sheet 19 of 23)

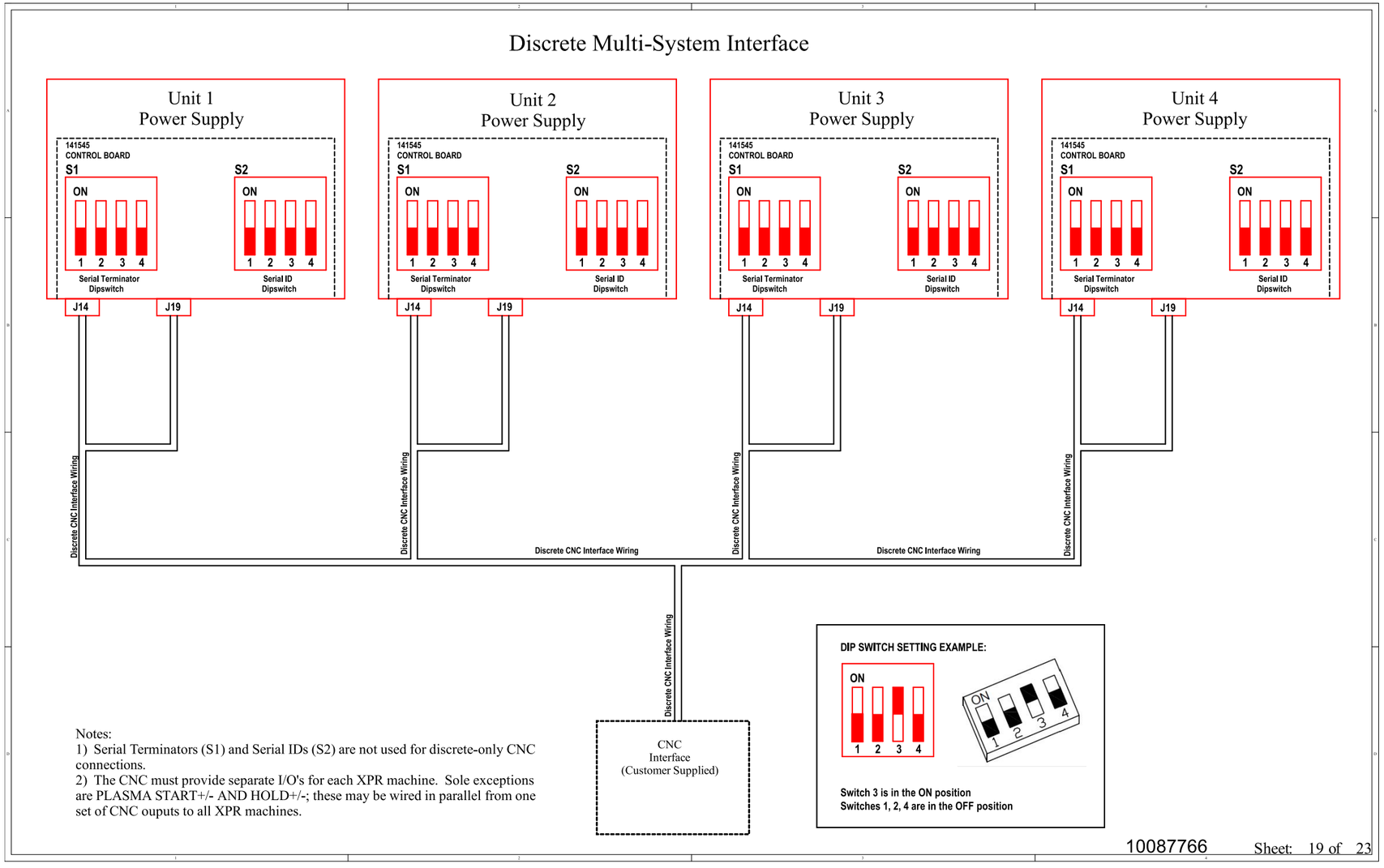

EtherCAT connection to EDGE Connect (Sheet 20 of 23)

EtherCAT Connection to Edge Connect

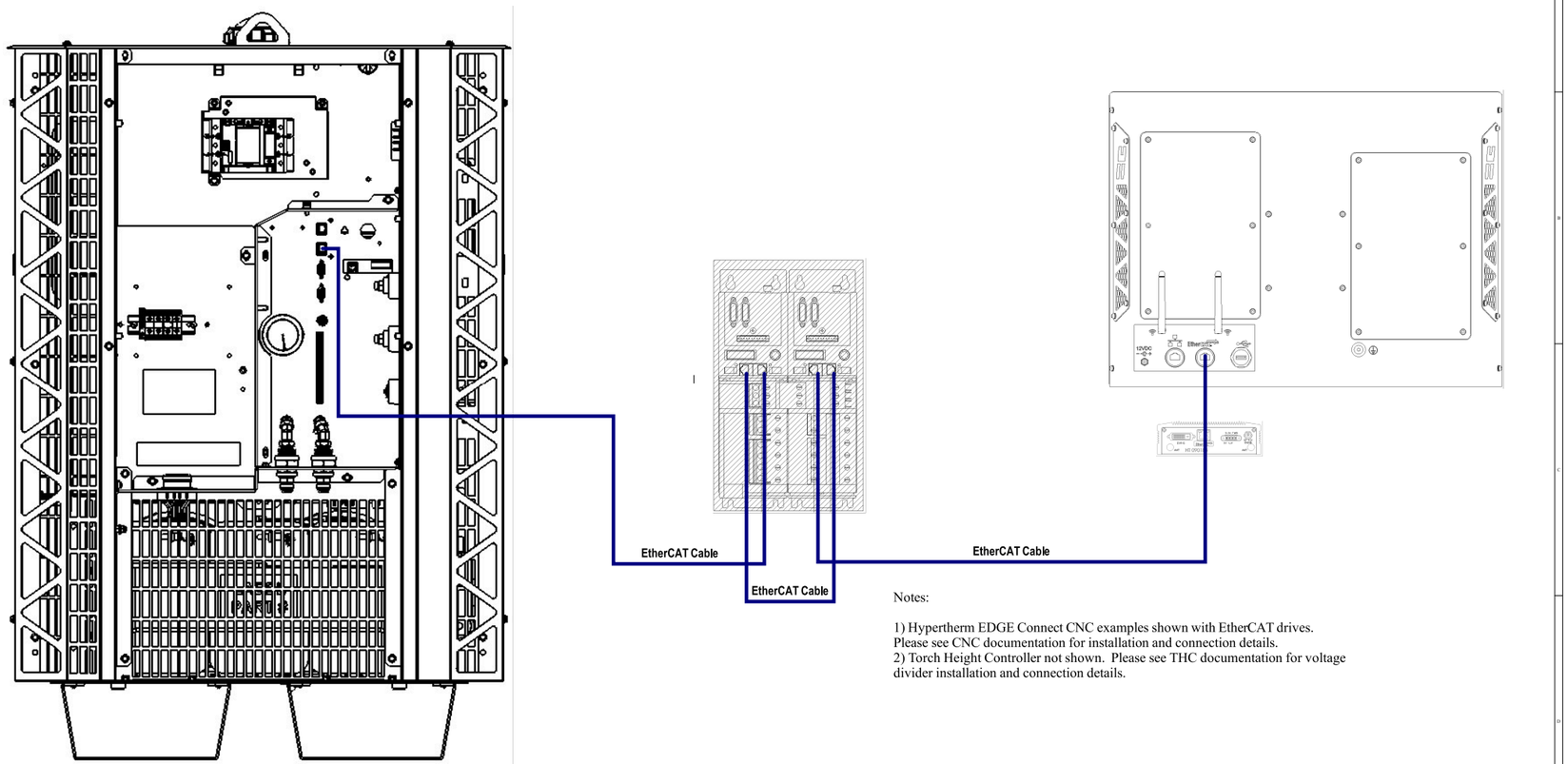

Notes:

1) Hypertherm EDGE Connect CNC examples shown with EtherCAT drives. Please see CNC documentation for installation and connection details.
2) Torch Height Controller not shown. Please see THC documentation for voltage divider installation and connection details.

10087766 Sheet: 20 of 23

Discrete and serial RS-422 CNC connections (Sheet 21 of 23)

Discrete CNC I/O and RS-422 Serial Connections

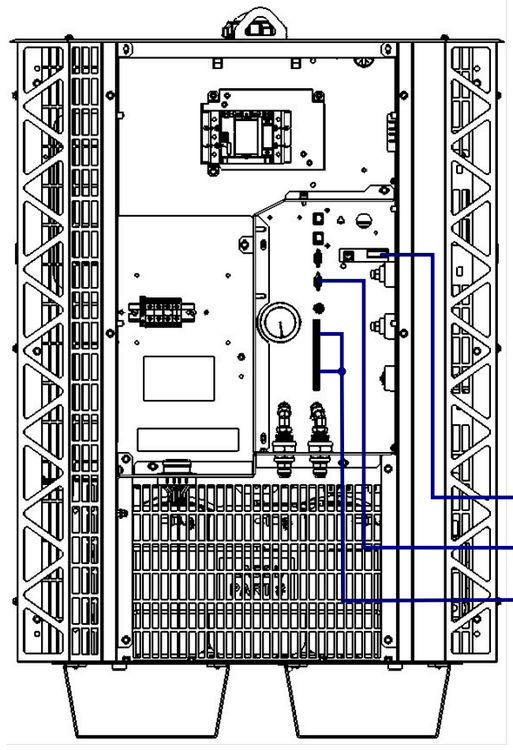

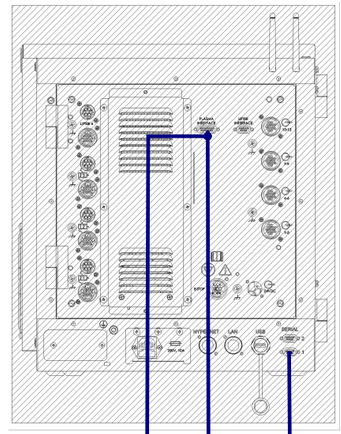

Discrete CNC I/O Cable 2

RS-422 Cable

Discrete CNC I/O Cable

Notes:

1) Please see CNC documentation for installation and connection details.
2) Torch Height Controller not shown. Please see THC documentation for voltage divider installation and connection details.

10087766 Sheet: 21 of 23

Discrete CNC connections (Sheet 22 of 23)

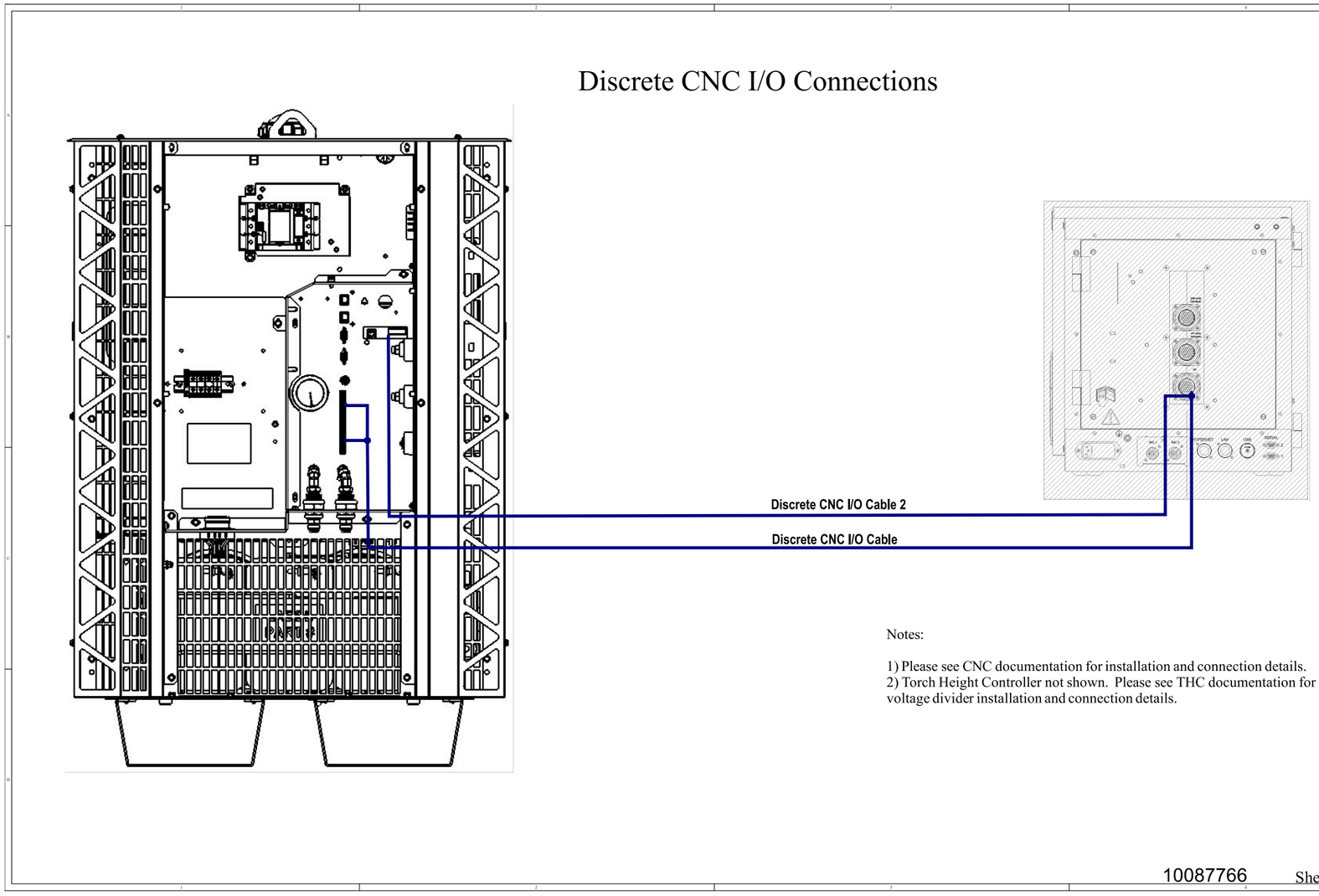

Wireless subsystem block diagram (Sheet 23 of 23)

