Hypertherm®

DynaMAX™ 550P/560P/575P

Waterjet Pump

Operator Manual

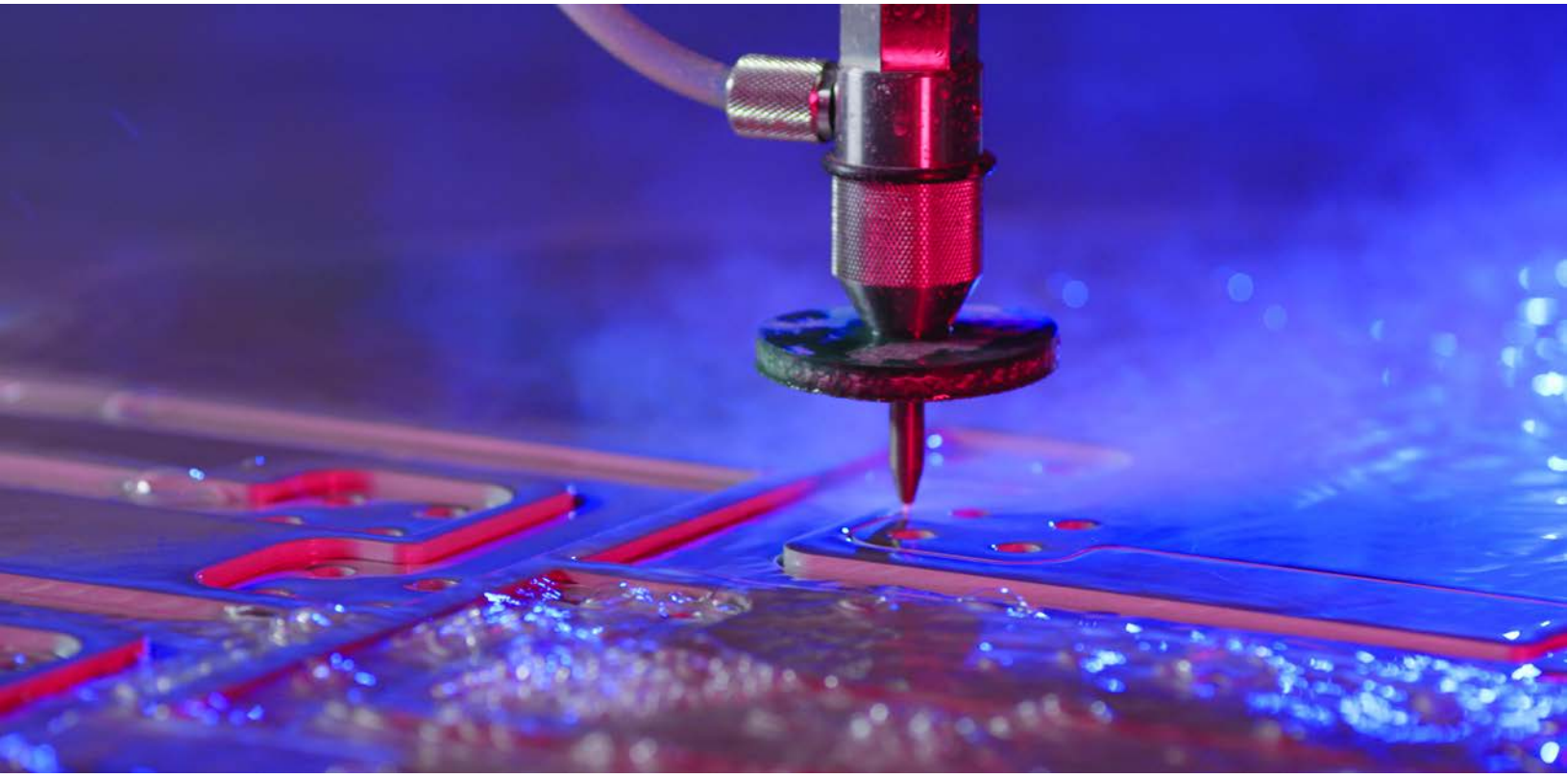

811390 – REVISION 0.1

ENGLISH

DynaMAX, Seal Maintenance Indicator, SMI, Seal Maintenance Technology, SMT, AccuStream, and Hypertherm are trademarks of Hypertherm, Inc. and may be registered in the United States and other countries. All other trademarks are the property of their respective holders.

Environmental stewardship is one of Hypertherm's core values. www.hypertherm.com/environment

100% Associate-owned

© 2022 – 2026 Hypertherm, Inc.

DynaMAX 550P/560P/575P Waterjet Pump

Operator Manual

811390
REVISION 0.1

ENGLISH
Original instructions

June 2026

Hypertherm, Inc.
Hanover, NH 03755 USA
www.hypertherm.com

Hypertherm, Inc.
21 Great Hollow Road, P.O. Box 5010
Hanover, NH 03755 USA
603-643-3441 Tel (Main Office)
603-643-5352 Fax (All Departments)
info@hypertherm.com (Main Office)
800-643-9878 Tel (Technical Service)
technical.service@hypertherm.com (Technical Service)
800-737-2978 Tel (Customer Service)
customer.service@hypertherm.com (Customer Service)

Hypertherm México, S.A. de C.V.
52 55 5681 8109 Tel
52 55 5681 7978 Tel
soporte.tecnico@hypertherm.com (Technical Service)

Hypertherm Plasmatechnik GmbH
Sophie-Scholl-Platz 5
63452 Hanau
Germany
00 800 33 24 97 37 Tel
00 800 49 73 73 29 Fax
31 (0) 165 596900 Tel (Technical Service)
00 800 4973 7843 Tel (Technical Service)
technicalservice.emeia@hypertherm.com (Technical Service)

Hypertherm (Singapore) Pte Ltd.
Solaris @ Kallang 164
164 Kallang Way #03-13
Singapore 349248, Republic of Singapore
65 6841 2489 Tel
65 6841 2490 Fax
marketing.asia@hypertherm.com (Marketing)
techsupportapac@hypertherm.com (Technical Service)

Hypertherm Japan Ltd.
Level 9, Edobori Center Building
2-1-1 Edobori, Nishi-ku
Osaka 550-0002 Japan
81 6 6225 1183 Tel
81 6 6225 1184 Fax
htjapan.info@hypertherm.com (Main Office)
techsupportapac@hypertherm.com (Technical Service)

Hypertherm Europe B.V.
Vaartveld 9, 4704 SE
Roosendaal, Nederland
31 165 596907 Tel
31 165 596901 Fax
31 165 596908 Tel (Marketing)
31 (0) 165 596900 Tel (Technical Service)
00 800 4973 7843 Tel (Technical Service)
technicalservice.emeia@hypertherm.com (Technical Service)

Hypertherm (Shanghai) Trading Co., Ltd.
B301, 495 ShangZhong Road
Shanghai, 200231
PR China
86-21-80231122 Tel
86-21-80231120 Fax
86-21-80231128 Tel (Technical Service)
techsupport.china@hypertherm.com (Technical Service)

South America & Central America: Hypertherm Brasil Ltda.
Rua Bras Cubas, 231 – Jardim Maia
Guarulhos, SP – Brasil
CEP 07115-030
55 11 2409 2636 Tel
tecnico.sa@hypertherm.com (Technical Service)

Hypertherm Korea Branch
#3904. APEC-ro 17. Heaundae-gu. Busan.
Korea 48060
82 (0)51 747 0358 Tel
82 (0)51 701 0358 Fax
marketing.korea@hypertherm.com (Marketing)
techsupportapac@hypertherm.com (Technical Service)

Hypertherm Pty Limited
GPO Box 4836
Sydney NSW 2001, Australia
61 7 3103 1695 Tel
61 7 3219 9010 Fax
au.sales@hypertherm.com (Main Office)
techsupportapac@hypertherm.com (Technical Service)

Hypertherm (India) Thermal Cutting Pvt. Ltd
A-18 / B-1 Extension,
Mohan Co-Operative Industrial Estate,
Mathura Road, New Delhi 110044, India
91-11-40521201/ 2/ 3 Tel
91-11 40521204 Fax
htindia.info@hypertherm.com (Main Office)
technicalservice.emeia@hypertherm.com (Technical Service)

For training and education resources, go to the Hypertherm Cutting Institute (HCI) online at www.hypertherm.com/hci.

Hypertherm products are designed and manufactured with a commitment to continuous quality control and safety. Contact a Hypertherm Technical Service Associate for information and support regarding the installation, operation, maintenance, and repair of this equipment.

Contents

Warranty 11

Disclaimer 11
Waterjet product warranty 11

Product stewardship 13

National and local safety regulations 13
Certification test marks 13
Differences in national standards 14
Higher-level systems 15

Environmental stewardship 17

Hypertherm products: waste and recycling 17
Particle emission and waste water quality 17
Chemical handling and usage 18

Safety 19

Manuals 19
User qualification and training 20
Emergency medical information and treatment 21
Safety information for operation, maintenance, repair, and installation 22

Symbols and marks 25

Information and symbols 25
Symbols and marks found on the equipment 27

1 Product description 31

Flow of water and hydraulic fluid 32
Cooling loop 33

Pump exterior 35
Pump interior 40

2 Optional equipment 45

3 Operation 47
Safety 47
Use the controls 48
Operation panel 48
Operator interface 49
Turn on the pump: beginning of day or beginning of shift 52
Clean and inspect the pump 52
Check the hydraulic fluid quality 53
Turn on the utilities 54
Start the pump 54
Make sure that the emergency stop operates correctly 55
Examine the pump for leaks or damage 55
Check the low-pressure water pressure gauges 56
Check the hydraulic filter gauge 57
Check the hydraulic fluid level 57
Operate the pump remotely 58
Stop the pump 58
Operate the pump locally 59
Select the pressure mode 59
Set the target water pressure 59
Stop the pump 59
Emergency stop 60
Turn off the pump: end of day or end of shift 60
Redundant intensifiers 61
Change the intensifier that is in operation 61

4 Preventive maintenance 65
Safety 66
Benefits of preventive maintenance 67
Training 68
Tools 68
Preventive maintenance schedule 70
General 72
Examine and clean the equipment 72
Examine the pump for leaks or damage 74

Electrical system 76
Make sure that the emergency stop operates correctly 76
Make sure that the electrical interlock operates correctly 76
Examine cords, plugs, and cables 76
Hydraulic system 78
Check the hydraulic filter 78
Check the hydraulic fluid level 79
Check the hydraulic fluid quality 80
Replace the hydraulic filter element 80
Lubricate the primary motor bearings 84
Low-pressure water system 86
Examine the transport tubes 86
Clean the Seal Maintenance Indicator tubes 86
Replace the Seal Maintenance Indicator tubes 88
Measure the air pressure in the water accumulator tank 88
Check the low-pressure water pressure gauges 89
Air cooler 90
Clean the air side of the cooler 90
Clean the hydraulic fluid side of the cooler 90
Low-pressure water 91
Replace the water filters 91
Test the water quality 93
Intensifier 96
Prepare to do maintenance on the intensifier 98
Disassemble the intensifier 99
Assemble the intensifier 106
Bleed-down valve 120
Repair the bleed-down valve 121
Install the bleed-down valve 122
Start the pump after maintenance 123
Operator interface: Maintenance screens 125
Primary maintenance screen 126
Move the plunger 126
Start the pump after maintenance 126
Prepare for storage 127
Record maintenance 127
Inputs and outputs 130
Alarm log 130
Postmaintenance start procedure 131
Prepare for storage 134
Recycling and end of product life 135

5 Parts lists 137

Tools 138
Maintenance and repair kits 139
Optional equipment 141
Replacement parts 142
Lubricants 142
Electrical system 142
Hydraulic system 143
Low-pressure water system 144
High-pressure water system 145

6 Troubleshooting 147

Safety 147
General 148
Normal status 148
Alarms 149
Types of alarms 149
Warnings 150
Faults 152
Intensifier 155
Leaks 155
Overstroke 159
High-pressure water seal life is short 164
Hydraulic fluid 165
Temperature 167
The pump makes noise during operation 168
Low-pressure water 169
Seal Maintenance Indicator (SMI) 170
Alarms 170
Controller errors 171
Input-output status 171

7 Specifications 173

All DynaMAX 5-series pumps 174
Environmental conditions 174
Hydraulic fluid 174
Utilities 174
Compressed air 175
DynaMAX 550P 176
Dimensions and weights 176
Electrical 176

Water....176
DynaMAX 560P....177
Dimensions and weights....177
Electrical....177
Water....177
DynaMAX 575P....178
Dimensions and weights....178
Electrical....178
Water....178
Orifices....179
Torque values....179
Fasteners....179
Special fasteners....180
Fittings....182

8 Installation....187
Safety....187
Buyer responsibilities....188
Requirements....189
Location....189
Cooling....189
Hydraulic fluid....190
Compressed air....190
Utilities....191
Receive and unpack the equipment....192
Install the pump....193
Install the external heat exchanger (optional)....195
Connect the utilities to the pump....196
Check the hydraulic fluid....199
Connect the electrical power....200
Do the first start....200
Do a preoperation inspection....201
Turn on the utilities....201
Make sure that the primary motor turns in the correct direction....202
Make sure that the heat exchanger fan motor turns in the correct direction....204
Turn on the pump....204
Adjust the boost pump pressure....205
Measure the air pressure in the water accumulator tank....205
Flush the pump and the high-pressure tubing....206
Operator interface: Adjustment screens....207
Pump Adjustments....207
Seal Maintenance Indicator....214

Enter or change the time and date 215
Intensifier Control 216
Pressures 217
SD Card 218
Remote operation 218
Storage 218

9 Declaration of Incorporation 219

10 Technical drawings 221

Warranty

Disclaimer

All information contained in this manual is believed to be reliable as of the date of publication. The manual could contain technical inaccuracies or typographical errors and can be changed or updated without notice.

The descriptions, images, and diagrams shown in this manual are for general information. The actual equipment configuration could be different from the examples.

Waterjet product warranty

Product	Warranty coverage up to
Waterjet pump	27 months from the ship date, or 24 months from the date of proven installation, or 4,000 hours of operation, whichever occurs first
Reverse osmosis system Bulk abrasive pot Abrasive regulator On-off valve air actuator	15 months from the ship date, or 12 months from the date of proven installation, whichever occurs first
Diamond orifice	600 hours of operation with the use of a thimble filter and compliance with Hypertherm's water quality requirements

Hypertherm's warranty does not extend to defects, failures, damages, deficiencies, or errors that are:

- not reported to Hypertherm within the warranty period; or
- the result of modification, abuse, misuse, noncompliance with the installation or operation instructions, unauthorized repair, inadequate maintenance, neglect, accident, or the use of unapproved parts; or
- the result of normal wear; or
- the result of the system being operated contrary to Hypertherm's instructions or stated limits of rated and normal use.

For information about the manufacturer's warranty, refer to the conditions of sale provided when the product was purchased.

Consumable parts are not included in this warranty. Consumable parts include high-pressure water seals, check valves, cylinders, bleed-down valves, low-pressure seals, high-pressure tubing, and filters.

All third-party motors, pumps, and plumbing accessories are warrantied by the respective manufacturers and are not included in this warranty.

Product stewardship

Hypertherm maintains a global regulatory management system to make sure that products comply with regulatory and environmental requirements.

National and local safety regulations

National and local safety regulations shall take precedence over instructions supplied with the product. The product shall be imported, installed, operated, and discarded in compliance with national and local regulations applicable to the installation site.

Certification test marks

Certified products are identified by 1 or more certification test marks from accredited testing laboratories.

The certification test marks are on the pump's data plate.

Each certification test mark means that the product and its safety-critical parts conform to the national safety standards as reviewed and determined by that testing laboratory.

Hypertherm puts a certification test mark on its products only after that product is manufactured with safety-critical parts that have been approved by the accredited testing laboratory.

Once the product has left the Hypertherm factory, the certification test marks are invalid if one or more of these events occurs.

- The product is modified in a manner that causes danger or does not conform with the applicable standards.
- Safety-critical parts are replaced with unapproved spare parts.

- Assembly is unauthorized.
- An accessory that uses or generates dangerous voltage is added.
- A safety circuit or other feature that is designed into the product as part of the certification has been tampered with.

The Conformité Européene (CE) mark affixed to a product signifies the manufacturer's Declaration of Incorporation to applicable European directives and standards.

Only those versions of Hypertherm products with a CE mark on or near the data plate have been tested for compliance with the applicable European directives, such as the Low Voltage Directive, the Electromagnetic Compatibility Directive, and the Machinery Directive.

If this product has a Declaration of Incorporation, a copy (in English) is included. Refer to Declaration of Incorporation on page 219.

Differences in national standards

Nations can apply different performance, safety, or other standards. National differences in standards include, but are not limited to:

- Voltage
- Plug and cord ratings
- Language requirements
- Electromagnetic compatibility requirements

Differences in national or other standards can make it impractical or impossible for all certification test marks to be put on the same version of a product. For example, the Canadian Standards Association (CSA) versions of Hypertherm's products do not comply with European electromagnetic compatibility requirements; therefore, they do not have a CE mark on the data plate.

Countries where the CE mark is necessary or that have compulsory electromagnetic compatibility regulations must use CE versions of Hypertherm products with the CE mark on the data plate.

These could include:

- countries in the European Union
- Australia
- New Zealand
- Russia

It is important that the product and its certification test mark be suitable for the end-use installation site. When Hypertherm products are shipped to one country for export to a different country, the product must be correctly configured and certified for the end-use installation site.

Higher-level systems

When an original equipment manufacturer (OEM) or a system integrator adds equipment such as cutting tables, motor drives, motion controllers, or robots to a Hypertherm waterjet cutting system, the system is considered a higher-level system. A higher-level system with dangerous moving parts can constitute industrial machinery or robotic equipment, in which case the OEM, system integrator, or end-use customer can be subject to more regulations and standards than those applicable to the waterjet cutting system manufactured by Hypertherm.

It is the responsibility of the end-use customer and the OEM or system integrator to do a risk assessment for the higher-level system and to provide protection against dangerous moving parts.

Unless the higher-level system is certified when the OEM or system integrator incorporates Hypertherm products into it, the installation can be subject to approval by local authorities. Get advice from legal counsel and local regulatory experts if you are not sure about compliance.

External cables connecting parts of the higher-level system must be made for exposure to contamination and movement as necessary for the end-use installation site. When the external interconnecting cables are subject to exposure to oil, dust, water, or other contamination, hard usage ratings could be necessary.

When external interconnecting cables are subject to continuous movement, constant flexing ratings can be necessary. It is the responsibility of the OEM, system integrator, or end-use customer to make sure that external connecting cables are correct for the application and obey all national, state, and local regulations.

Environmental stewardship

Hypertherm products: waste and recycling

Hypertherm waterjet cutting systems, like all products with electronics, can contain materials or parts, such as printed circuit boards, that cannot be discarded with ordinary waste. It is your responsibility to discard Hypertherm products or parts in an environmentally suitable manner and in compliance with national and local codes.

In the United States, read all national, state, and local laws. In the European Union (EU), read the EU directives, national, and local laws. In other countries, refer to national and local laws. Consult with legal or other compliance experts, when applicable. For information, go to www.hypertherm.com/customer-support/product-service/recycling.

Particle emission and waste water quality

Hypertherm does not manufacture or supply the materials that are cut and has no knowledge about the particles released from materials that are cut and if they can pose a physical danger or health risk. Get advice from your supplier or other technical advisor for guidance concerning the properties of the material you cut with a Hypertherm product.

If you are not familiar with the current applicable government regulations and legal standards for the installation site, get advice from a local expert before you purchase, install, and operate this equipment.

Chemical handling and usage

Material safety data sheets (MSDS) and safety data sheets (SDS) are part of a hazard communication plan that supplies detailed information about dangerous chemicals. The information includes the chemical's toxicity and reactivity, first aid for exposure, approved storage and disposal, recommended protective equipment, and spill-handling procedures.

The Occupational Safety and Health Administration (OSHA) has presented new dangerous chemical labeling requirements as a part of its recent revision of the Hazard Communication Standard (29 CFR 1910.1200), to align with the United Nations' Globally Harmonized System of Classification and Labeling of Chemicals (GHS). The GHS is an international system for standardizing chemical classification and labeling.

Chemical regulations in the USA, Europe, and other locations require that MSDS and SDS be made available for chemicals that are supplied with the product and chemicals used in or on the product. The list of chemicals is supplied by Hypertherm.To see MSDS and SDS:

1. Go to www.hypertherm.com/docs.
2. Look for "To view all regulatory and compliance documents, click here" below the Select the product box.

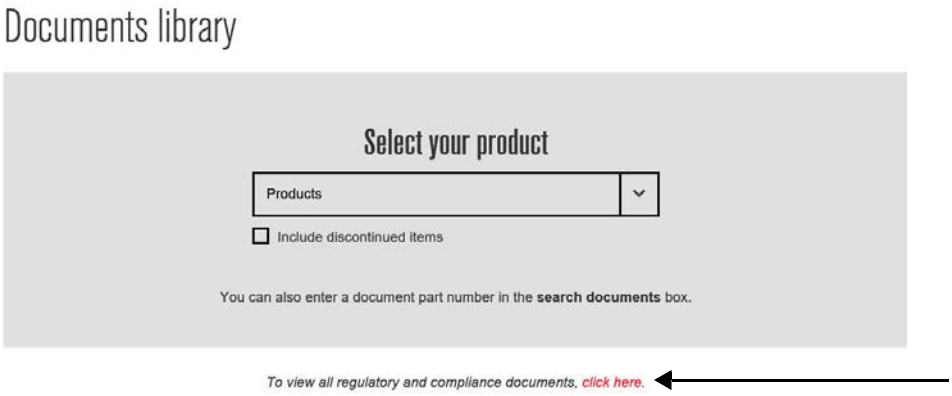

3. Look for Safety Data Sheets. Click **+**.

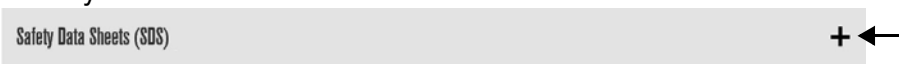

These navigation instructions can change without notice.

Safety

The end user is responsible for the safe operation of this equipment.

	Before operating Hypertherm equipment, read the safety instructions in the product's manual.

Manuals

Copies of Hypertherm manuals can accompany the product in electronic and printed formats. Copies of the manuals are online, in all languages available for each manual.

1. Go to www.hypertherm.com/docs.
2. Under “Select your product,” choose Waterjet Family in the dropdown list.
3. Go to the “Operator and instruction manuals” section and click +.
4. Click on the manual for your product. You may have to click on SHOW ALL at the bottom of the section.

   A PDF of the manual downloads to your device.

	These navigation instructions can change without notice.

The safety precautions in this manual are general and cannot anticipate every situation. Hypertherm, Inc. acknowledges that unforeseen situations such as equipment failure, site variability, insufficient maintenance, failure of control equipment, and other events can cause equipment damage, injuries, or death. It is the user’s responsibility to identify dangers and to take the steps necessary to minimize risks.

Keep these instructions near the equipment. This manual is intended to familiarize the user with the equipment and its parts, safe operation, and maintenance.

All personnel who operate or have access to this equipment must know this information:

- Applicable safety standards
- The use, limitations, and maintenance of personal protective equipment
- The location of the written hazard communication program and safety data sheets
- How to recognize dangerous energy sources
- The correct methods for isolating and controlling energy, to include lock out–tag out procedures

User qualification and training

All users must read and understand these instructions before installing, operating, or doing maintenance on this equipment.

Do not let an untrained person operate this equipment. Operators must be approved to operate and maintain this equipment.

Training should include:

- How to start and stop the equipment during operation and in an emergency situation
- Conditions and procedures that can lead to injuries to personnel and damage to the equipment
- How to operate all controls
- How to identify and respond to a problem with the equipment
- How to do maintenance procedures
- A copy of the operator manual

This list is not all-inclusive.

Emergency medical information and treatment

WARNING	**WARNING** **Pressurized fluid can cause injuries.** A waterjet is a cutting tool. Keep away from high-pressure streams and leaks. A high-pressure injection injury is a surgical emergency. Get medical treatment immediately for all high-pressure waterjet injuries. Delayed treatment can cause injuries or death. Abrasive waterjets eject a mixture of water and abrasive materials that can be injected into body tissues, leading to a dangerous infection.
WARNING	Do not put ice or heat on a waterjet injury. If possible, use a support to keep injured body parts above heart level.

High-pressure equipment puts the operator and other personnel at risk of contact with high-pressure water. Possible injuries include eye damage, lacerations, infections, and amputations.

Waterjet operators should have a waterproof emergency medical tag or card that describes the recommended treatment for high-pressure water injuries. Show the tag or card to emergency responders and medical professionals.

This wallet-size card can be copied, laminated, and folded.

The person with this card has been exposed to a waterjet of up to 4,140 bar (60,000 psi) and a velocity of 609 m/s (2,000 feet/second). Abrasive waterjets can eject water and abrasive materials that can be injected into body tissues, leading to a dangerous infection. ■ Skin can appear to be not damaged or show a small pinhole-sized puncture wound. ■ The injured area can become swollen, painful, and pale over the next 4 to 6 hours. ■ Tissue becomes ischemic and necrotic within 12 hours.	**MEDICAL INFORMATION** **A high-pressure injection injury is a surgical emergency.** **Get medical treatment immediately for all high-pressure waterjet injuries.**
■ Consult a surgical specialist immediately for decompression, removal of foreign materials, and debridement. ■ Give broad-spectrum, intravenous antibiotics for Gram-negative and Gram-positive organisms. ■ X-ray is the preferred imaging method. ■ Acute compartment syndrome is possible. ■ Leave the wound open. ■ Do not use solvents other than isotonic sodium chloride solution for irrigating the wound.	■ Do not use digital or local nerve blocks. ■ Give analgesics by mouth or injection.

Safety information for operation, maintenance, repair, and installation

Also refer to Symbols and marks on page 25.

DANGER	Before opening the electrical enclosure or doing maintenance or repairs on this equipment, turn **OFF** the electrical power and release water pressure and hydraulic pressure from the system. Use standard lock out–tag out procedures. Isolate all sources of electrical, mechanical, hydraulic, pneumatic, chemical, thermal, or other energy with a lockable energy-isolating device that satisfies national and local requirements.
WARNING	Make sure that all connections, fasteners, locking devices, hoses, and fittings are tight before operation.
WARNING	Make sure that the shaft access cover and all other safety devices are correctly installed before operating this machine.
WARNING	Do not stand in line with high-pressure fittings when operating this equipment. If a high-pressure fitting fails, it can cause a stream of water or hydraulic fluid to eject from the system with force.
WARNING	Do not leave waterjet cutting equipment unattended while it is operating.
WARNING	During operation, keep a restricted-access area clear that is larger than the maximum movement range of the cutting equipment's moving parts.
WARNING	Let only approved personnel operate this machinery.
WARNING	Release all high-pressure water before doing work on this equipment.
WARNING	**HOT SURFACE** Do not touch.

WARNING	Obey all safety requirements and applicable safety laws and regulations. Obey national and local codes regarding installation, repairs, and maintenance of the electrical and plumbing systems. All work that requires opening the electrical enclosure or removing covers or panels from this equipment must be done only by an approved technician. It is your responsibility to investigate and obey all local codes.
WARNING	A person who works on deenergized machinery can be injured or killed if the machinery is energized without permission. All personnel in an area where energy-control procedures are used must receive training for energy-control procedures.
WARNING	**DANGEROUS VOLTAGE** **Risk of shock** Doing work on this equipment while it is energized is dangerous. Personnel who maintain and repair this equipment can be injured or killed if dangerous energy is not controlled. Injuries can include burns, cuts, fractures, or electrocution.
WARNING	Before removing a lock-out device: ● Obey the employer's energy-control procedure. ● Examine machines and parts to make sure that they are operational. ● Make sure that all personnel are safely away from machines. After removing energy-isolation devices, make sure that all personnel in the area know that the devices are removed and that the machine is being energized.
WARNING	To reduce the risk of injuries or death, wear approved protection and obey safety recommendations when doing work with electricity.
WARNING	When work must be done in a small space or an area with limited access, the access must not be blocked by ventilation ducts, hoses, pipes, or other equipment.
WARNING	Do not block or remove warnings, cautions, or instructions.
WARNING	Personal protective equipment is recommended. If you do not use personal protective equipment, there is a risk of injury or death.
	WARNING **High-pressure water can cause eye injuries.** Wear approved eye protection when operating or doing work near this equipment.

	WARNING **Long periods of exposure to noise can cause permanent hearing loss.** Wear approved ear protection and control exposure time when operating or doing work near this equipment. This waterjet equipment could make more noise than is permitted by national or local codes. When this intensifier is operating, the noise level is 75 dB(A) to 85 dB(A). Water flow rate, pipe layout, and the acoustical characteristics of the building have an effect on noise level.
	WARNING **High-pressure water can cause cuts, abrasions, and punctures.** Precision parts can have sharp corners or edges. Wear approved hand protection when operating or doing work near this equipment and when touching parts.
	WARNING **Some materials can cause airborne contamination or particles when cut.** Wear approved respiratory protection when operating or doing work near this equipment.
CAUTION	Water leaking from a high-pressure fitting or the bleed-down valve can be hot.
CAUTION	Examine and clean the equipment regularly. Refer to the Examine and clean the equipment on page 72. Do repairs immediately.

Symbols and marks

Information and symbols

Some symbols in this table could apply to other products.

DANGER	**DANGER** identifies an imminently dangerous condition or a situation that **WILL** cause serious injuries or death if ignored.
WARNING	**WARNING** identifies a dangerous condition or a situation that **COULD** cause injuries or death if ignored.
CAUTION	**CAUTION**, when used with the yellow warning sign, identifies a dangerous condition or a situation that **COULD** cause minor or moderate injuries or **WILL** cause damage to the equipment if ignored.
NOTICE	***NOTICE*** identifies a condition or a situation that **COULD** cause damage to the equipment if ignored.
	This symbol identifies a mandatory action.
	This symbol identifies a prohibited action.

	This symbol identifies tools or materials that are necessary or recommended for a procedure.
	This symbol identifies a tip or helpful information.

Symbols and marks found on the equipment

Some symbols or marks in this table could apply to other products.

DANGER	**DANGEROUS VOLTAGE** **Risk of shock.**
DANGER	**ARC FLASH AND SHOCK HAZARD** Follow ALL requirements in NFPA 70E for safe work practices and for Personal Protective Equipment.
DANGER	**DANGER** Do not remove, destroy, or cover this label. Read instruction manual carefully before installing, operating, or servicing this equipment. High voltage and rotating parts will cause serious or fatal injury. **1.** Turn off and lock out power before service or maintenance. **2.** Do not insert any object into fan cover, air inlet, or outlet windows before or during running. **3.** Ground and protect per national electric code and local codes.
WARNING	**WARNING** Risk of explosion Do not operate this equipment without the guard installed.
WARNING	**HAZARDOUS VOLTAGE** Disconnect power before servicing.
WARNING	**WARNING** This product can expose you to chemicals including lead and lead compounds, which are known to the State of California to cause cancer and birth defects or other reproductive harm. For more information go to www.p65warnings.ca.gov.
	WARNING **Cancer and reproductive harm.** www.p65warnings.ca.gov
	Connections may come loose during shipping and normal operation. Hydraulic, water, and electrical connections can come loose during shipping and normal operation. It is recommended that all connections are checked at installation and annually.

CAUTION	**HOT SURFACE** Do not touch.
	ATTENTION **Interlock installed** High-pressure cutting water is disengaged when the top cover is open.
	Recyclable Drain and dispose of properly.
	Do not pour the contents of this container down a drain.
	Do not consume the contents of this container.
	Refer to the manual Read and fully understand all of the safety guidelines in this manual.
	WARNING Read and fully understand the operations and maintenance manuals before servicing this machine. Failure to follow the correct procedures could result in serious injury.
	Correct direction of motor rotation (motor rotation arrow)
PN	Pump part number
SN	Serial number
V	Volts
Φ	Number of phases in a power system
Hz	Frequency (hertz)
	Type of hydraulic fluid recommended
	Hydraulic fluid tank volume (liters)
FLA	Full-load current (amperage)
SCCR	Short-circuit current rating
(M) Imax	Primary motor maximum current draw (amperes)
(M) kW	Primary motor power output (kilowatts)
L/min	Maximum outlet flow rate (liters/minute)

bar	Maximum outlet water pressure (bar)
kg	Weight (kilograms)
DWG	Electrical enclosure and schematic drawing number
CE	The Conformité Européene (CE) mark affixed to a product signifies the manufacturer's Declaration of Incorporation to applicable European directives and standards. Only those versions of Hypertherm products with a CE mark on or near the data plate have been tested for compliance with the applicable European directives, such as the Low Voltage Directive, the Electromagnetic Compatibility Directive, and the Machinery Directive.
	Use caution when operating this equipment. Refer to the manual. Read and fully understand all of the safety guidelines in this manual.
	Identifies the terminal of a protective earth (ground) electrode or a terminal intended to connect to an external conductor for protection against electric shock during a fault condition
	Control circuit on
	Remote key switch off The key switch is in the **LOCAL** position.
	Remote key switch on The key switch is in the **REMOTE** position.
	COMPRESSED AIR The bleed-down valve uses compressed air to operate.
	CUTTING WATER IN This line carries low-pressure water from a water softener, a reverse osmosis system, a well, or a public utility to the pump.
	CUTTING WATER OUT This tubing carries high-pressure water from the intensifier to the cutting table.
	WASTE WATER OUT This hose carries water from the bleed-down valve to a drain.
	COOLING IN **Water-cooled system:** This line carries low-pressure water from the local utility or a chiller to the pump's cooling loop. **Air-cooled system:** This line carries hydraulic fluid to the system from the external heat exchanger.

	COOLING OUT **Water-cooled system:** This line carries low-pressure water from the heat exchanger to a drain or to a chiller. **Air-cooled system:** This line carries hydraulic fluid from the system to the external heat exchanger.
	Prefilter water pressure
	Postfilter water pressure

1 Product description

ⓘ	It is possible that not all of the information in this section applies to all pump models.

Flow of water and hydraulic fluid

These diagrams show a typical installation.

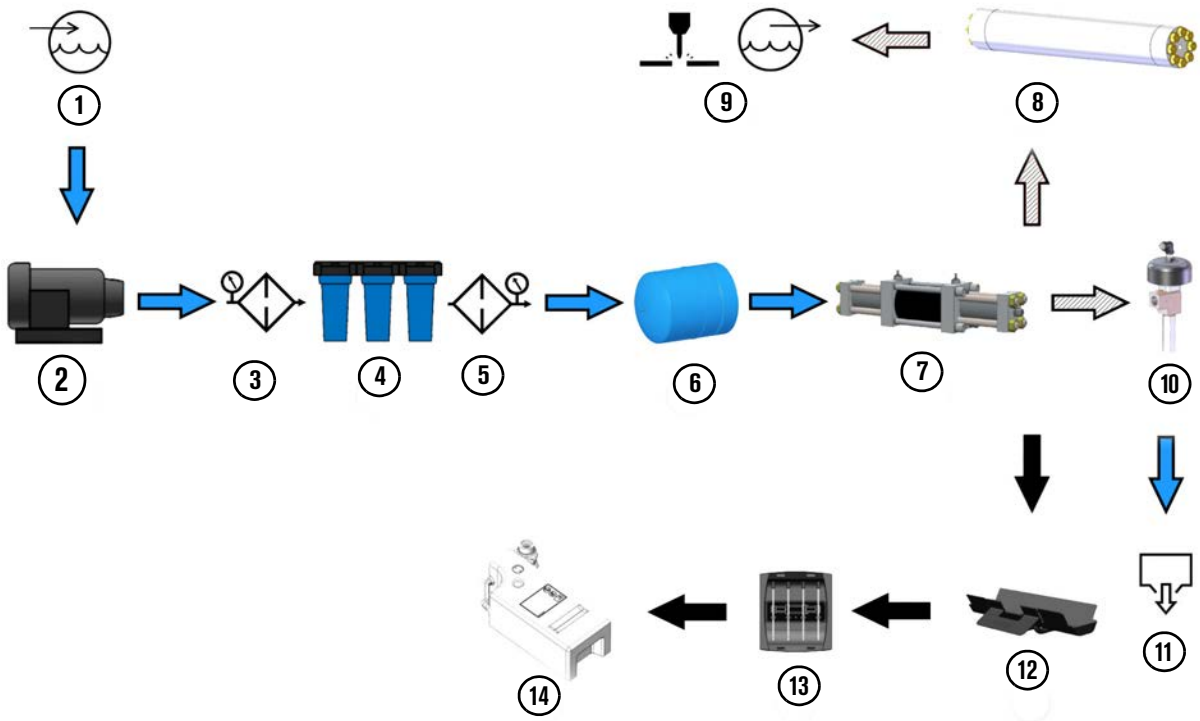

Low-pressure water

High-pressure water

Seal Maintenance Technology™

1 **Utility panel: CUTTING WATER IN**

Supply water from a water softener, a reverse osmosis system, a well, or a public utility goes into the pump.

2 **Boost pump**

Increases water pressure

3 **Prefilter water gauge**

4 **Water filters**

5 **Postfilter water gauge**

6 **Water accumulator tank**

7 **Intensifier**

8 **Attenuator**

9 **Utility panel: CUTTING WATER OUT**

High-pressure water goes from the intensifier to the cutting head.

10 **Bleed-down valve**

11 **Utility panel: WASTE WATER OUT**

Low-pressure water goes to a drain.

12 **Drip tray**

13 **Seal Maintenance Indicator™ (SMI)**

14 **Dirty water container**

Cooling loop

Compressing hydraulic fluid generates substantial heat that can cause damage to equipment and decrease the life of the fluid. Fluid that is too hot is thin, which accelerates wear on the parts, increases the formation of sludge, degrades the fluid, and decreases its lubrication and protective qualities. Increased temperature can mean that there is a problem with the cooling system.

The cooling loop keeps the hydraulic fluid at its optimum temperature.

Cooling loop for a water-cooled system (internal heat exchanger)

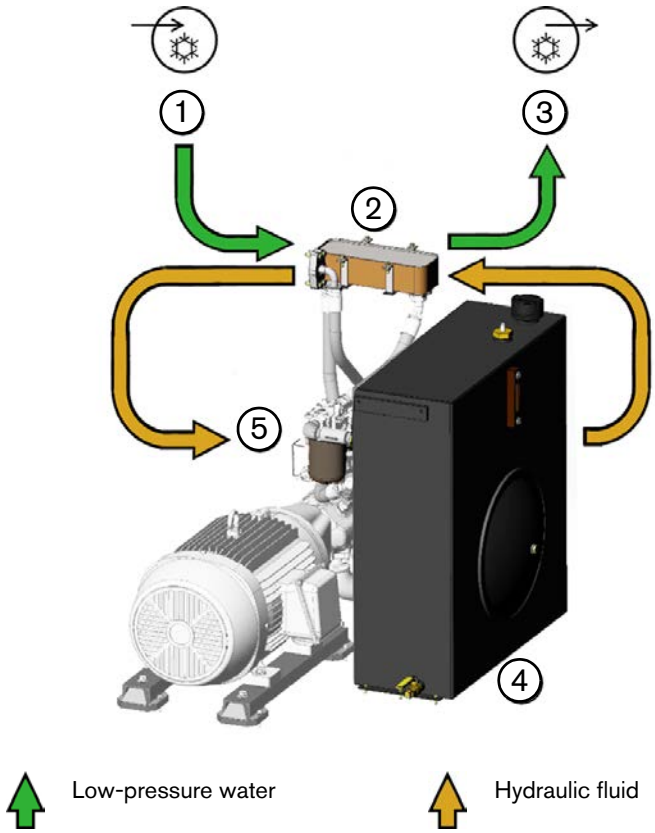

1 **Utility panel: COOLING IN**

Low-pressure supply water or water from a chiller goes to the heat exchanger.

2 **Internal heat exchanger**

3 **Utility panel: COOLING OUT**

Water from the heat exchanger goes to a chiller or a drain.

4 **Hydraulic fluid tank**

Hydraulic fluid goes from the tank to the gear pump (not shown). From the gear pump, the hydraulic fluid goes to the heat exchanger.

5 **Hydraulic filter**

The gear pump moves hydraulic fluid from the heat exchanger to the filter and then into the tank.

When the primary motor is operating, cooling water goes through the heat exchanger, transferring heat away from the hydraulic fluid to the cooling water.

Cooling loop for an air-cooled system (external heat exchanger)

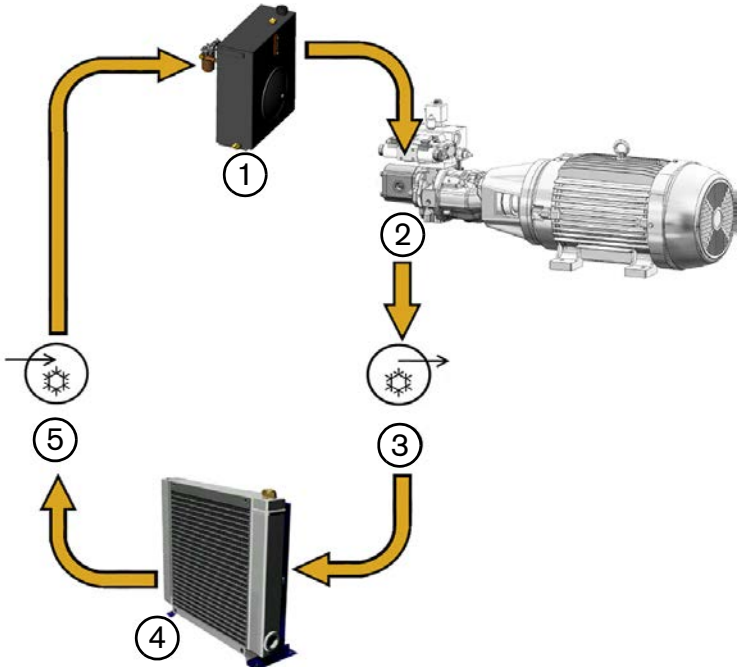

1 **Hydraulic fluid tank**

Hydraulic fluid goes from the tank to the gear pump.

2 **Gear pump**

From the gear pump, hydraulic fluid goes to the heat exchanger.

3 **Utility panel: COOLING OUT**

4 **External heat exchanger**

A fan keeps the hydraulic fluid cool.

5 **Utility panel: COOLING IN**

Hydraulic fluid goes from the heat exchanger to the hydraulic filter and then into the tank.

When the primary motor is operating, hydraulic fluid goes through the heat exchanger, where a fan pushes ambient air through the heat exchanger.

Pump exterior

Front view

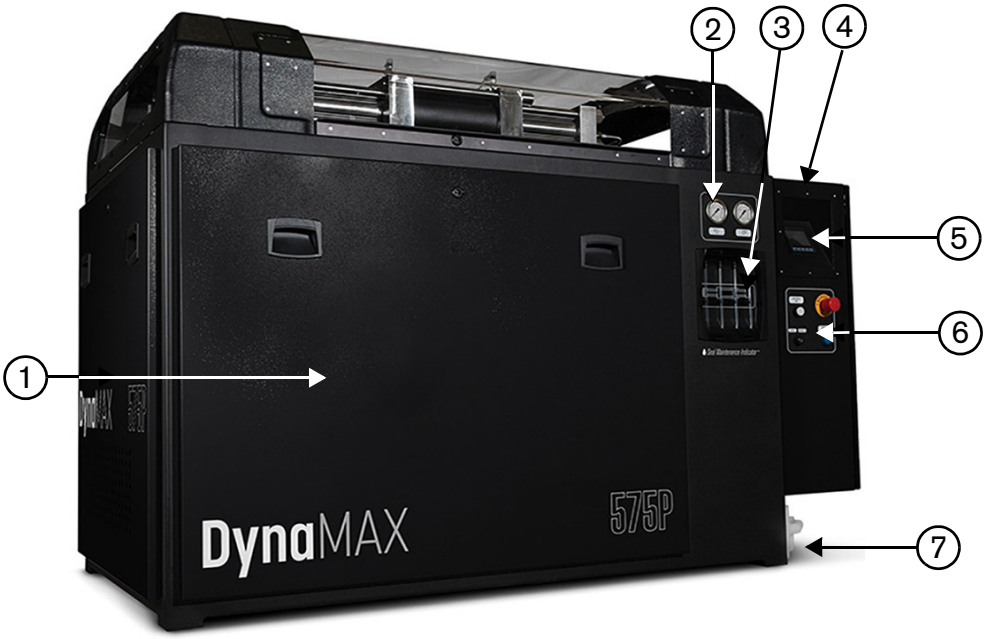

1 Front panel
2 Gauge panel
3 Seal Maintenance Indicator (SMI)
4 Electrical enclosure
5 Operator interface
6 Operation panel
7 Dirty water container

Panels

The front, rear, and side panels have locks to prevent access to system components during operation. Open the locks with a standard screwdriver.

Gauge panel

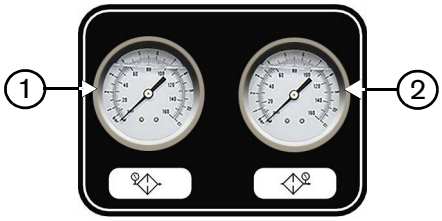

1 Prefilter water-pressure gauge

The prefilter water-pressure gauge shows the water pressure before the water goes through the filters.

2 Postfilter water-pressure gauge

The postfilter water-pressure gauge shows the water pressure after the water goes through the filters.

Seal Maintenance Indicator (SMI)

ℹ	The SMI is a monitoring device, not a measuring device.

Seal Maintenance Technology™ optimizes seal life. The SMI monitors the leak rate from the intensifier. When a seal failure is possible, a warning shows on the operator interface and the beacon light flashes.

When an intensifier seal begins wearing out, water and hydraulic fluid leak from the weep holes in the high-pressure ends.

A drip tray, which is attached to the bottom of each side of the intensifier, collects fluid leaking from weep holes.

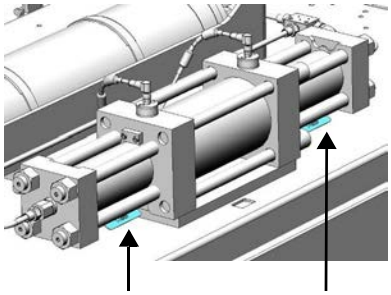

From the drip tray, fluid flows through a clear tube to the SMI. When a drip passes an optical sensor, a blue LED illuminates, showing which of the weep holes on the intensifier is the source of the drip.

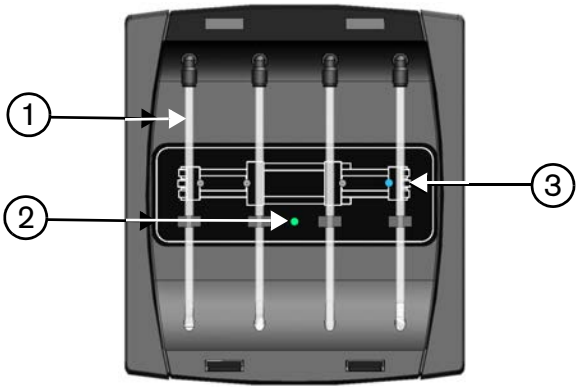

1 SMI tube

2 Power LED (green)

3 Drip sensor LED (blue)

Electrical enclosure

Motor starters, thermal overload relays, and breakers are in the enclosure.

The primary breaker disconnect lever is on the electrical enclosure.

Primary breaker disconnect lever

Operator interface

On the operator interface, a series of screens shows equipment status and lets the operator control the pump and the intensifier.

Operation panel

The operation panel turns the control circuit in the pump on and off and controls local and remote pump operation.

Dirty water container

Water and hydraulic fluid captured in the drip trays goes to the dirty water container found under the electrical enclosure.

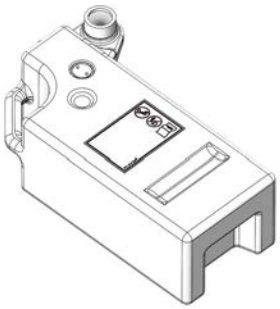

Rear view

Utility panel

The air and water fittings are found on the utility panel.

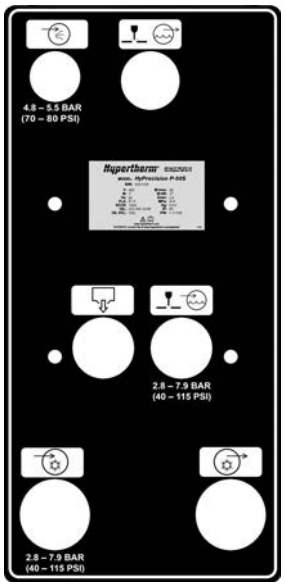

The diagram on page 32 shows the flow of water through the pump system.

Top deck

Top cover

A hinged top cover protects components on the top deck from dirt and debris. Open the lock with a standard screwdriver.

Electrical interlock (optional)

The electrical interlock is part of the emergency stop circuit. If the top cover is opened while the pump is on, the result is the same as pushing the **EMERGENCY STOP** button. Refer to Emergency stop on page 60.

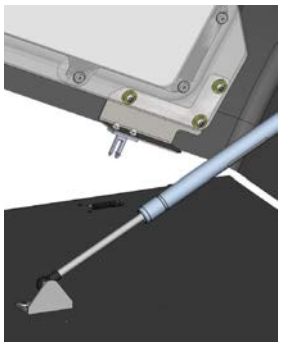

An override key is provided for access to the components on the top deck.

High-pressure system

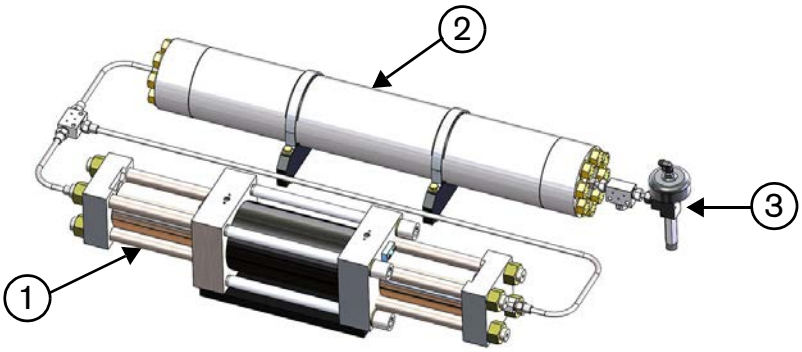

1 Intensifier

2 Attenuator

3 Bleed-down valve

Intensifier

Low-pressure supply water goes into the intensifier, where it is pressurized for piercing and cutting.

The hydraulic center section contains hydraulic fluid, which is used to compress water in the high-pressure ends.

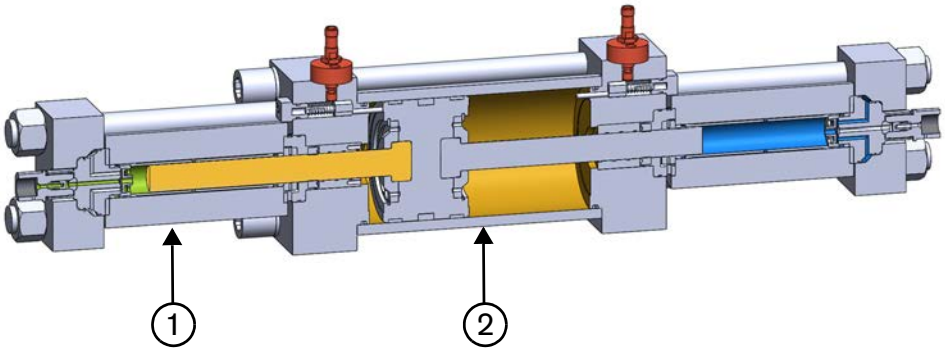

1 High-pressure end

2 Hydraulic center section

The pressurized water exits the high-pressure end through a check valve and goes to the attenuator.

Attenuator

The piston stroking in the hydraulic center section of the intensifier causes a brief change of water pressure. The attenuator compensates for high-pressure water fluctuations and maintains a consistent output pressure.

The 2-liter attenuator has a guard installed. The attenuator guard is intended to keep personnel safe from studs or end caps, which can become projectiles if the attenuator fails.

Bleed-down valve

The bleed-down valve is a normally open, air-actuated dump valve. The valve releases high-pressure water from the system when the pump is turned off or when the operator changes from cut mode to pierce mode.

Pump interior

Front view

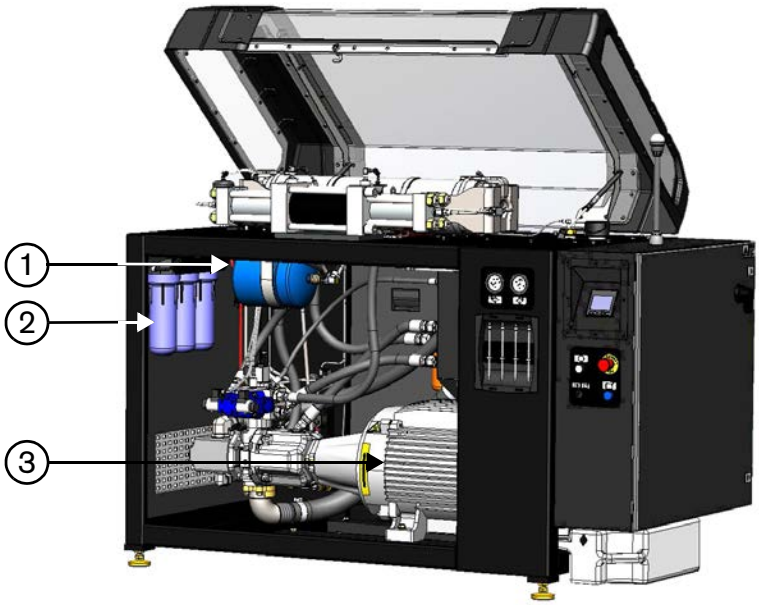

1 Water accumulator tank

This is a closed water chamber with a pressurized air bladder. It evens out low-pressure water flow to the intensifier, and maintains a consistent output water pressure.

2 Water filters

Water filters remove impurities from the supply water before it goes to the intensifier.

3 Primary motor

Primary motor

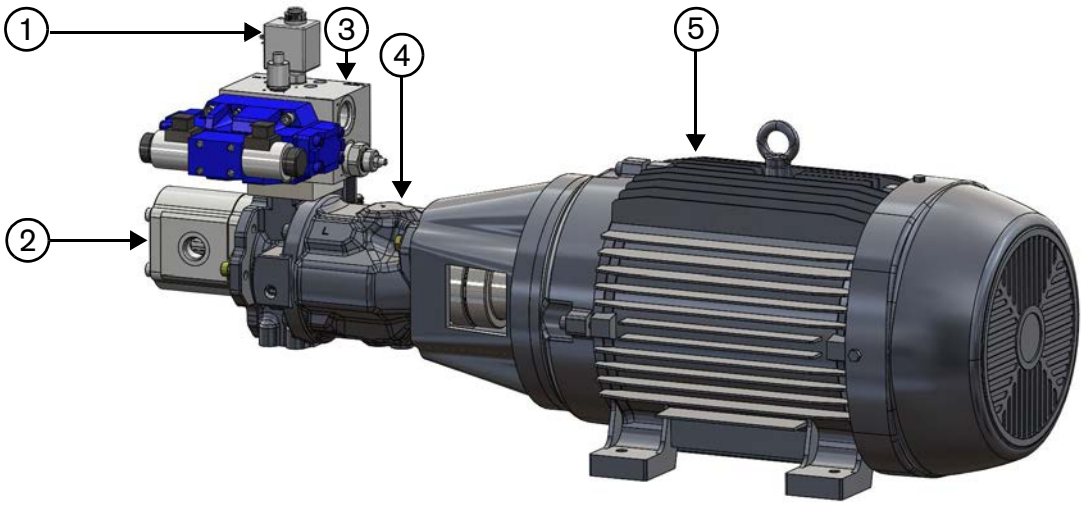

1 Proportional control valve

2 Gear pump

3 Hydraulic manifold

4 Hydraulic pump

5 Primary motor

Proportional control valve

Electronic proportional pressure control is a closed-loop monitoring system. It adjusts pressure when changes are sensed, such as when the operator enters a water pressure target change on the operator interface pump or at the CNC.

A hydraulic pressure sensor gives feedback to the controller to let the system increase decrease the pressure to the cut setpoint or the pierce setpoint. The controller gradually increases pressure in the system. This reduces mechanical stress on the intensifier.

Gear pump

Compressing hydraulic fluid generates heat that can cause damage to equipment and decrease the life of the fluid. The gear pump is part of the cooling loop. It moves hydraulic fluid from the hydraulic fluid tank to the heat exchanger. The hydraulic fluid passes through a hydraulic filter and then goes to the hydraulic fluid tank.

Hydraulic manifold and hydraulic pump

The hydraulic pump pressurizes fluid from the hydraulic fluid tank. The pressurized fluid goes through the hydraulic manifold, which contains a shift valve that delivers hydraulic fluid to alternating sides of the intensifier.

Hydraulic fluid from the hydraulic center section in the intensifier goes to the hydraulic fluid tank through the hydraulic manifold.

The hydraulic manifold also houses a hydraulic transducer, which monitors hydraulic pressure in the system. A hydraulic relief valve sends hydraulic fluid back to the hydraulic fluid tank when the pressure is too high.

Primary motor

The primary motor drives the gear pump and the hydraulic pump.

Rear view

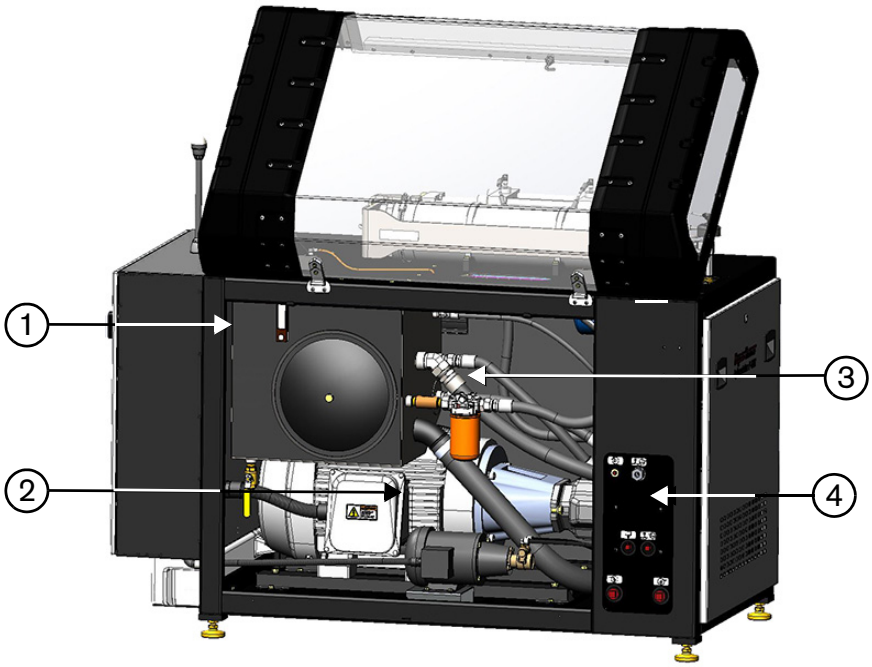

1 Hydraulic fluid tank

2 Boost pump

3 Hydraulic fluid filter

4 Water manifold

Hydraulic fluid tank

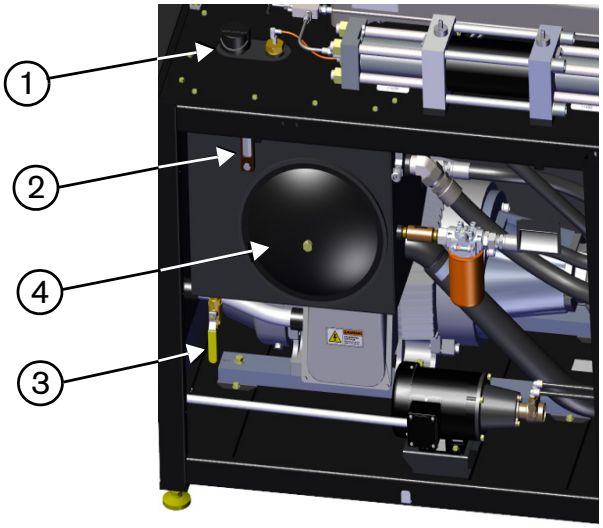

1 **Filler-breather cap**

The filler-breather cap keeps airborne contamination out of the tank and prevents pressure from building up in the tank. It also gives access to the tank for adding hydraulic fluid.

2 **Sight gauge**

A temperature sensor and a level sensor in the tank monitor the hydraulic fluid. Use the sight gauge to see the hydraulic fluid level and quality.

3 **Drain valve**

Use the drain valve to drain the tank.

4 **Suction strainer**

Suction strainers prevent contamination from entering the primary pump and the gear pump.

Boost pump

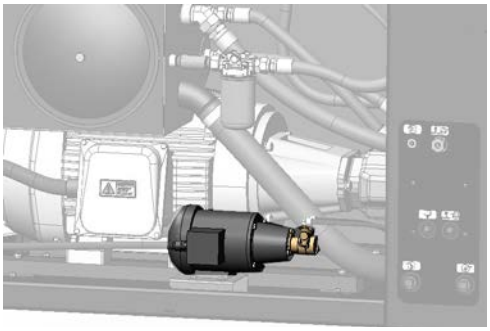

A minimum supply water pressure is necessary to operate the pump. A boost pump increases the water pressure to a value higher than the minimum requirement.

When the intensifier starts to stroke, the boost pump turns on. When there is no demand for cutting water, the boost pump turns off.

Hydraulic fluid filter

This filter removes contamination from the hydraulic fluid.

Water manifold

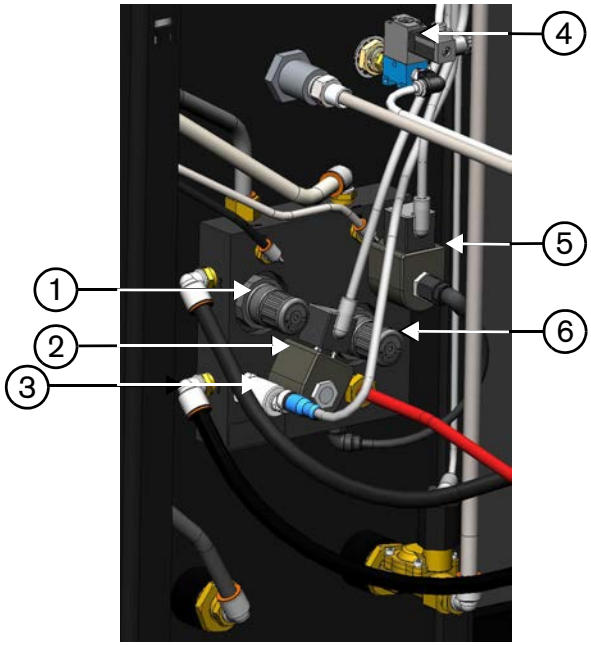

1 Boost pump pressure regulator

This knob lets the user adjust boost pump pressure.

2 Supply cutting water solenoid

The solenoid controls the cutting water coming into the system.

3 Low-pressure transducer

The transducer monitors the manifold water pressure.

4 Bleed-down valve solenoid

This solenoid opens and closes the bleed-down valve.

5 Low water-pressure water dump valve

The valve closes to maintain water pressure while cutting. It opens to release pressure when the pump turns off.

6 Low-pressure water relief valve

The relief valve prevents water in the system from being too high. When the valve opens, water goes to the drain.

2 Optional equipment

Electrical head exchanger

Standard pumps have a water-cooled heat exchanger. In an air-cooled system, the temperature sensor in the hydraulic fluid tank turns on an external heat exchanger.

Electrical interlock

An electrical interlock on the top cover prevents access to the components on the top deck while the system is pressurized.

The interlock is connected to the emergency-stop circuit. When the top cover is opened, the pump switches to emergency-stop mode and bleeds off all pressure.

3 Operation

Safety

WARNING	**Read and understand all of the safety guidelines in this manual.** Refer to Safety on page 19 before operating, doing maintenance on, repairing, and installing the pump.

Use the controls

Operation panel

The operation panel turns the control circuit in the pump on and off and controls local and remote pump operation.

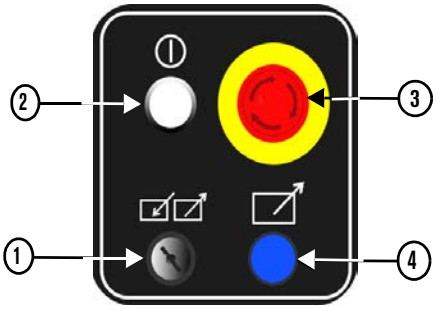

1 LOCAL-REMOTE key switch

When the key switch is in the **LOCAL** position, use the operator interface to operate the pump.

When the key switch is in the **REMOTE** position:

- Use the remote source, such as a computer numerical control (CNC) operator console, to control the pump.
- Most of the functions on the operator interface are not available.

Refer to Operate the pump remotely on page 58.

2 CONTROLS ON button

Push this button to turn **ON** the control circuit in the pump. The button lights when the control circuit is on.

3 EMERGENCY STOP button

When this button is pushed:

- The control circuit turns off, which turns off the pump, the primary motor, and the intensifier.
- The bleed-down valve opens to release high-pressure water from the system.

Refer to Emergency stop on page 60.

4 REMOTE indicator light

When the **LOCAL-REMOTE** key switch is in the **REMOTE** position, this indicator light is on.

Operator interface

These elements are on most screens.

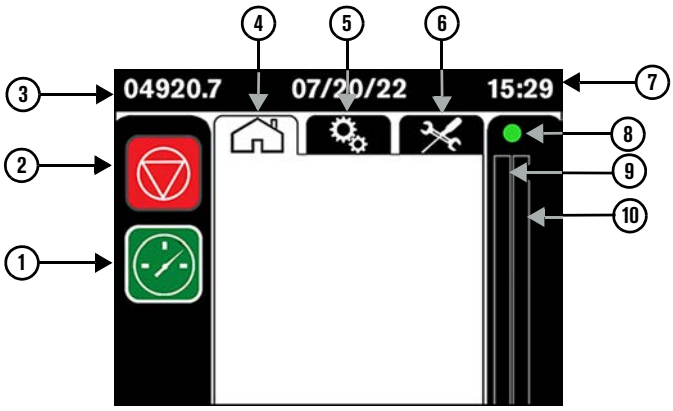

1 Start

Touch this symbol to start the pump.

2 Stop

Touch this symbol to stop the pump.

3 Hour meter

This shows the total hours the pump motor has been in operation.

4 Primary operation screen tab

- Turn the pump on or off.
- Select the pressure mode (cut or pierce).
- Set or change the water pressure.
- Monitor the status of the intensifier.

5 Adjustments screens tab

- See information about the system.
- Change some display options, such as pressure units (bar or psi) or language.
- Change timer durations.
- Turn features such as Modbus mode on or off.

Refer to Operator interface: Adjustment screens on page 207.

6 Maintenance screens tab

- Move the plunger to one end of the intensifier.
- Prepare the pump for storage.
- See the alarm log.
- See the inputs-outputs from the controller.

Refer to Operator interface: Maintenance screens on page 125.

7 Date and time

This shows the current date and time.

Refer to Seal Maintenance Indicator on page 214.

8 Intensifier status indicator

Engaged (green)

Not engaged (red)

9 Intensifier stroke rate bar (stroke to the left)

10 Intensifier stroke rate bar (stroke to the right)

The stroke rate is within the permitted range (green).

The stroke rate is at the limit of the permitted range (yellow).

The intensifier is overstroking (red).

Intensifier status indicator and stroke-rate bars

ℹ	It is normal for the intensifier to stroke faster during the start sequence and when changing from pierce pressure to cut pressure.

During normal operation, the intensifier strokes smoothly to the left and to the right at the same speed. The stroke-rate bars show the speed of the piston moving to each side of the intensifier. Refer to Overstroke on page 159 for troubleshooting information.

Intensifier control

When intensifier control is off, the primary screen shows a red ✖ on the intensifier symbol.

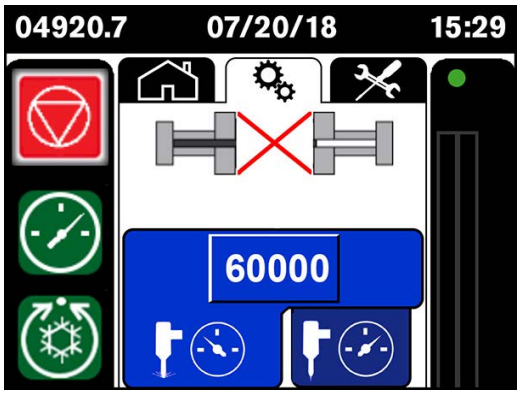

ⓘ	Refer to Intensifier control on page 50 for information about adjusting the intensifier overstroke percentage.

Primary operation screen

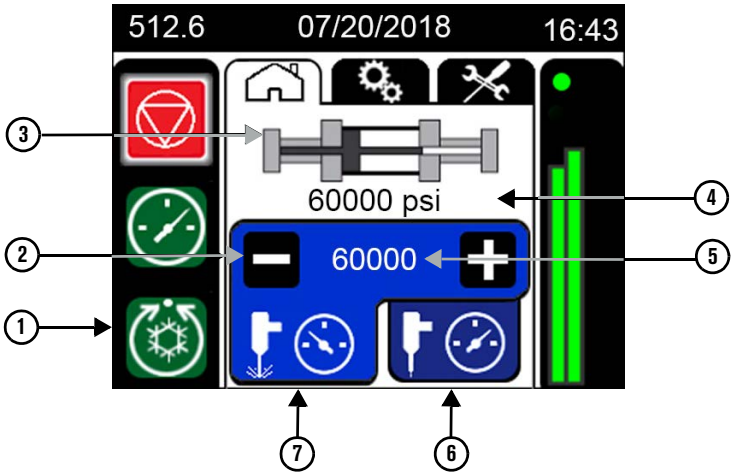

1 **Cooling mode**
Touch this symbol to put the pump in cooling mode.

2 Decrease (minus) or increase (plus) the water pressure

3 **Intensifier graphic**
The intensifier graphic is animated when the pump is on and the intensifier is engaged.

4 **Output water pressure**
This shows the actual water pressure in the system.

5 **Target water pressure**
Refer to Set the target water pressure on page 59.

6 **Pierce-pressure mode**
Touch this symbol to put the pump in pierce-pressure mode.

7 **Cut-pressure mode**
Touch this symbol to put the pump in cut-pressure mode.

Refer to Select the pressure mode on page 59 for information about pressure modes.

ℹ	The intensifier animation is not related to the actual stroke rate and can be moving when the intensifier is not stroking.

Turn on the pump: beginning of day or beginning of shift

Follow this procedure when starting the pump for the first time each day or at the beginning of each work shift.

	Daily preventive maintenance tasks are included in these instructions.

Clean and inspect the pump

Do this task when the pump is off.

1. Clean all debris, water, and hydraulic fluid off of the intensifier bridge, the hydraulic fluid tank, and the bottom deck.
2. Empty the dirty water container, if necessary.

	Refer to local regulations regarding waste water. Environmental rules can apply to disposal.
	Water in the container could have oil in it.

3. Clean the operator interface, if necessary.

	To prevent damage to the operator interface: ● Do not use cleaners that contain alcohol, ammonia, acetone, phosphates, or ethylene glycol. ● Do not push hard on the touchscreen. ● Do not use paper towels, abrasive cloth, or dirty rags. These can cause scratches. ● Do not put liquid directly onto the touchscreen.

   - Gently wipe the touchscreen and keys with a clean microfiber cloth.
   - Use a cleaner made for touchscreens or use a 1:1 solution of distilled water and white vinegar.

4. Examine electrical cords and cables for kinks or damage to the insulation. Examine electrical plugs and other electrical connections for corrosion or damage.
5. Look for leaks, deterioration, damage, or other conditions that can interfere with operation.
6. Make sure that all connections, fasteners, locking devices, hoses, and fittings are tight.
7. Make sure that all warning decals are visible and legible.

	Contact Hypertherm for replacement decals.

Check the hydraulic fluid quality

Replace the hydraulic fluid:

- every 3,000 hours.
- if it is dark or milky in color.
- if it has a strong odor.
- if a test laboratory finds the quality is unsatisfactory.

Refer to Replace the hydraulic fluid on page 81.

CAUTION	Heat and other conditions cause hydraulic fluid to degrade. Degraded hydraulic fluid can cause damage to hydraulic components. Refer to Hydraulic fluid on page 174 for recommended temperature limits.
	Collect a sample of hydraulic fluid from the hydraulic fluid tank and send it to a test laboratory for analysis. Contact a hydraulic fluid supplier for a precise report about the hydraulic fluid quality.

1. Look through the sight gauge to see the color of the hydraulic fluid. Good hydraulic fluid is almost transparent.
2. Remove the filler-breather cap on top of the tank.
3. Smell the hydraulic fluid. Good hydraulic fluid has almost no odor.
4. Install the filler cap.

Turn on the utilities

!	Close all doors and replace all panels and covers, including the top cover and access covers.

1. Turn **ON** the supply water to the pump.
2. Turn **ON** the compressed air source.
3. Turn **ON** the electrical main (line disconnect switch).
4. Turn the primary breaker disconnect lever on the electrical enclosure door to **ON**.
5. The operator interface screen is on when the pump is energized.

Start the pump

CAUTION	Use the On the operator interface, touch the maintenance symbol to open the primary maintenance screen. on page 126 if maintenance or repairs have been done on: • the high-pressure water system. • intensifier components. • the primary motor.

The pump is on when the primary motor is operating.

The primary motor drives 2 pumps. A hydraulic pump moves hydraulic fluid to the intensifier. A gear pump moves hydraulic fluid through the cooling loop.

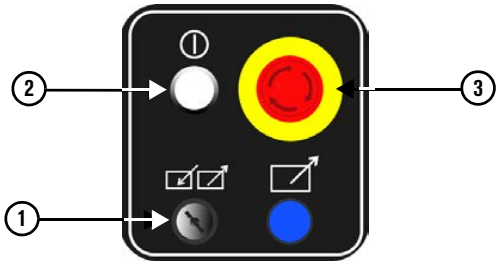

1. On the operation panel:
   a. Make sure that the **EMERGENCY STOP** button ③ is not engaged. If the button is pushed in, turn the button clockwise until it releases.
   b. Make sure that the **LOCAL-REMOTE** key switch ① is set to **LOCAL**.
   c. Push the **CONTROLS ON** button ②.
2. On the operator interface, touch the **START** symbol.

The controller starts the pump.

ⓘ	The normal start sequence is fully automated.

3. Monitor for leaks.

Make sure that the emergency stop operates correctly

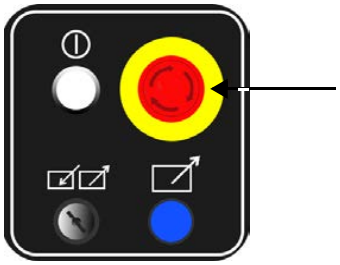

Do this task when the pump is operating.

On the operation panel, push the **EMERGENCY STOP** button. Refer to Emergency stop on page 60.

Examine the pump for leaks or damage

Do this task when the pump is operating and the system is pressurized.

1. Look for hydraulic fluid leaks. Monitor these areas:
   - Hydraulic connections
   - Valves
   - Intensifier bridge and bottom deck
2. Examine the low-pressure tubes and the hoses for leaks.
3. Examine the bleed-down valve for leaks or damage.

ⓘ	A hot bleed-down valve can suggest that there is a leak.

4. Examine the weep holes in the high-pressure ends for leaks. Water leaking from a weep hole is a sign of a faulty part or a loose connection.

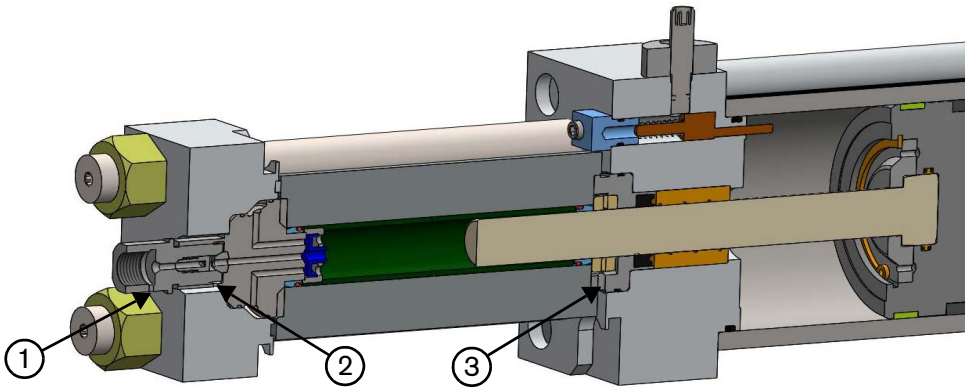

1 Output adapter leak
2 High-pressure seat leak
3 Dynamic seal leak

5. Examine the high-pressure tubing for leaks.

6. Look for deterioration, damage, or other problems.

Check the low-pressure water pressure gauges

Do this task every work shift.

Replace the water filter:

- every 1,000 hours.
- if the difference between the values is more than 0.7 bar (10 psi).

The prefilter water-pressure gauge shows the water pressure before the water goes through the filter. The postfilter water-pressure gauge shows the water pressure after the water goes through the filter.

The usual range is 2.8 bar to 7.6 bar (40 psi to 110 psi).

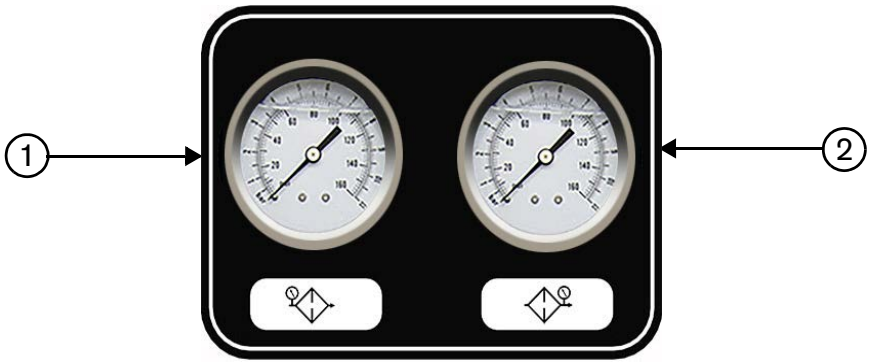

Do this task when the pump is operating.

Subtract the value shown on the postfilter water pressure gauge ① from the value shown on the prefilter water pressure gauge ②.

If the difference between the values is more than 0.7 bar (10 psi), replace the water filter.

Check the hydraulic filter gauge

Do this task every work shift.

Replace the hydraulic filter element:

- every 1,500 hours.
- when the indicator on the gauge stays in the red zone while the pump is operating.

Do this task when the pump is operating at a stable temperature.

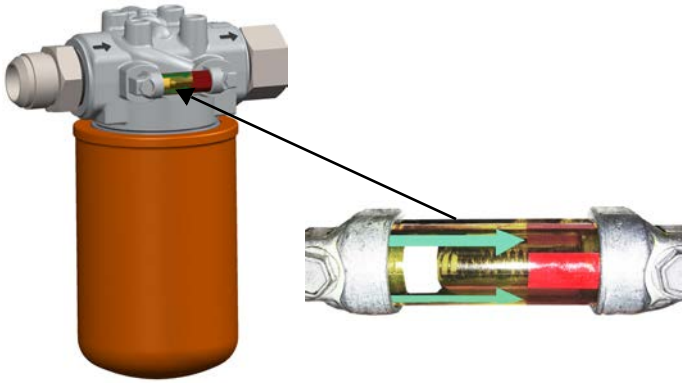

Make sure that the indicator on the hydraulic gauge is not in the red zone.

Check the hydraulic fluid level

Do this task every work shift.

Do this task when the pump is operating.

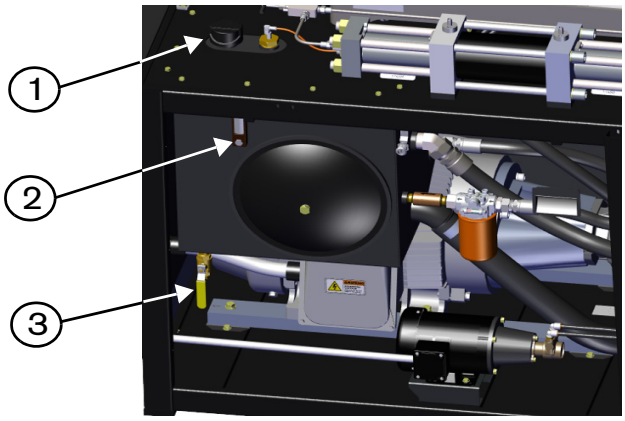

1 Filter-breather cap

2 Sight gauge

3 Drain valve

Make sure that the hydraulic fluid level is at the top mark on the sight gauge. Add hydraulic fluid, if necessary.

Operate the pump remotely

ⓘ	Refer to the OEM's instructions for starting the pump and for operating the pump from a remote source.

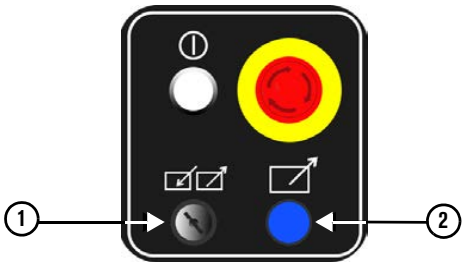

On the operation panel, turn the **LOCAL-REMOTE** key switch ① to **REMOTE**.

The remote indicator light is on ②.

Stop the pump

Refer to the OEM's instructions for turning the pump off.

Operate the pump locally

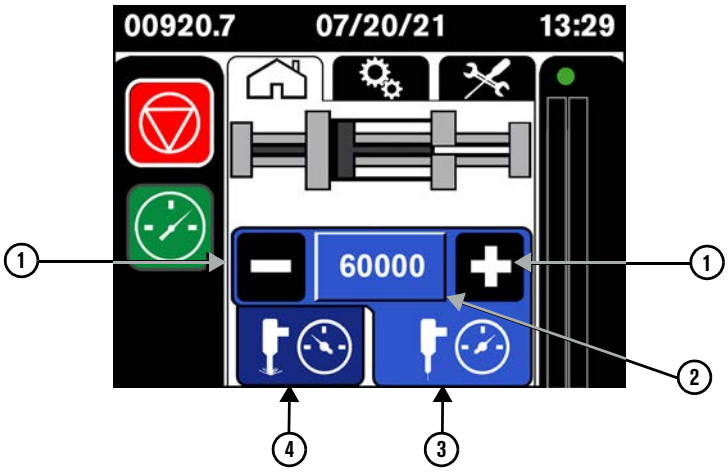

1 Minus and plus symbols
2 Target water pressure
3 Pierce-pressure mode
4 Cut-pressure mode

Select the pressure mode

ℹ	Pierce pressure is typically less than or equal to 1,380 bar (20,000 psi).

Cut-pressure mode is used for most cutting jobs.

Pierce-pressure mode (low-pressure mode) is applicable for:

- making a hole in the material to be cut.
- decreasing the risk of cracking when cutting brittle materials, such as glass or ceramic.
- preventing composite materials like carbon fiber from delaminating.

Set the target water pressure

There are 2 ways to change the target water pressure on the operator interface.

- Touch the minus symbol or the plus symbol next to the target water pressure to change the target water pressure in preset increments.
- Touch the target water pressure to open a numeric keypad. Type the number and then touch **Enter**.

Stop the pump

Use this procedure during normal operation.

On the operator interface, touch the **STOP** symbol.

- The control circuit stays on.
- The pump, the primary motor, and the intensifier turn off.

- The bleed-down valve opens to release high-pressure water from the system.
- The supply-water valve closes to stop low-pressure water from entering the system.

Emergency stop

WARNING	The emergency stop button does not disconnect main electrical power from the machine.
NOTICE	**This is not the preferred method of turning off the pump.**

Use the emergency stop button to prevent injury or to reduce the risk of injury to personnel, machinery, or work in progress.

On the operation panel, push the emergency stop button.

- The control circuit turns off, which turns off the pump, the primary motor, and the intensifier.
- Remote controls that are wired to the pump controller turn off.
- The bleed-down valve opens to release high-pressure water from the system.
- The supply-water valve closes to stop low-pressure water from entering the system.

	The emergency stop button must be reset before the equipment can be turned on. Turn the button clockwise until it releases.

Turn off the pump: end of day or end of shift

1. On the operator interface, touch the **STOP** symbol.
2. Turn the primary breaker disconnect lever on the electrical enclosure door to **OFF**.
3. Turn **OFF** the supply water to the pump. Make sure that the water pressure gauges show 0.0 bar (0 psi).
4. Turn **OFF** the compressed air source.
5. Turn **OFF** the electrical main (line disconnect switch). Use standard lock out–tag out procedures.
6. Remove the top cover and the front panel.
7. Clean all debris, water, and hydraulic fluid off of the intensifier bridge, the hydraulic fluid tank, and the bottom deck.

8. Empty the dirty water container, if necessary.

!	Refer to local regulations regarding waste water. Environmental rules can apply to disposal.
i	Water in the container could have oil in it.

Redundant intensifiers

A second intensifier reduces downtime by permitting the operator to use one or the other. This section describes how to change operation of the intensifiers on a pump with redundant units.

i	Intensifier 1 is the front unit, which is closest to the operator panel. Intensifier 2 is the rear unit.
i	Both intensifiers cannot run at the same time on this pump model.

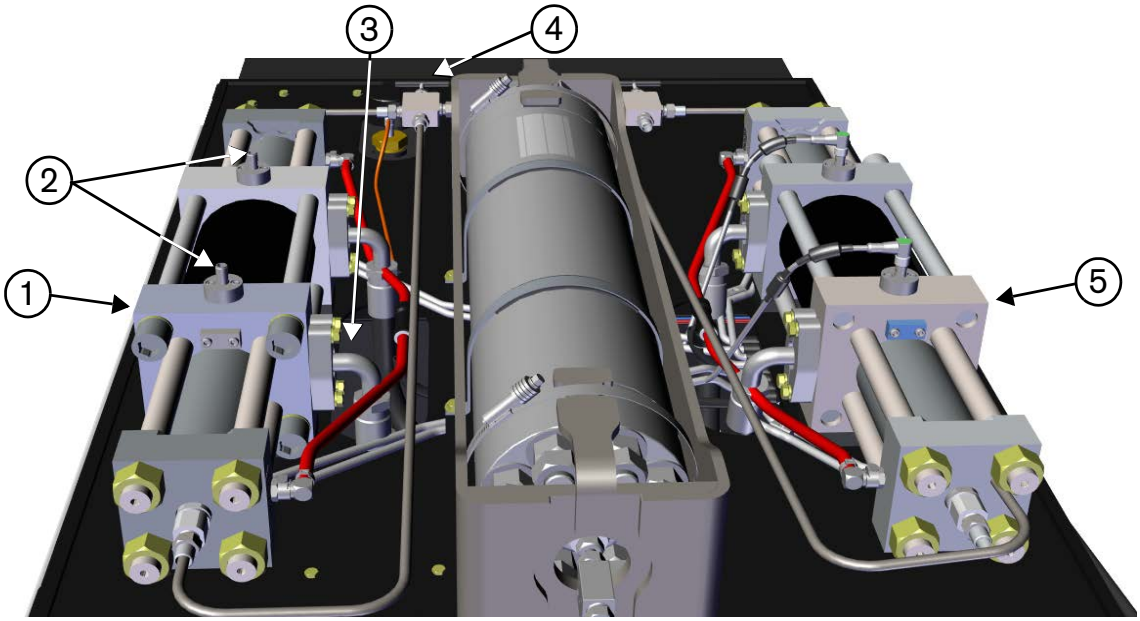

1 Rear intensifier
2 Proximity switch
3 Top deck access holes
4 High-pressure water valve handle
5 Front intensifier

Change the intensifier that is in operation

Do this task when the pump is not operating.

1. Turn the primary breaker disconnect lever on the electrical enclosure door to **OFF**.

2. Turn **OFF** the supply water to the pump. Make sure that the water pressure gauges show 0.0 bar (0 psi).

3. Turn **OFF** the electrical main (line disconnect switch). Use standard lock out–tag out procedures.

4. Open the top cover and separately remove the front panel from the pump.

5. Turn the high-pressure water valve handle to open the valve between the attenuator and the intensifier that will be operated.

6. Close the valve between the attenuator and the intensifier that will not be operated.

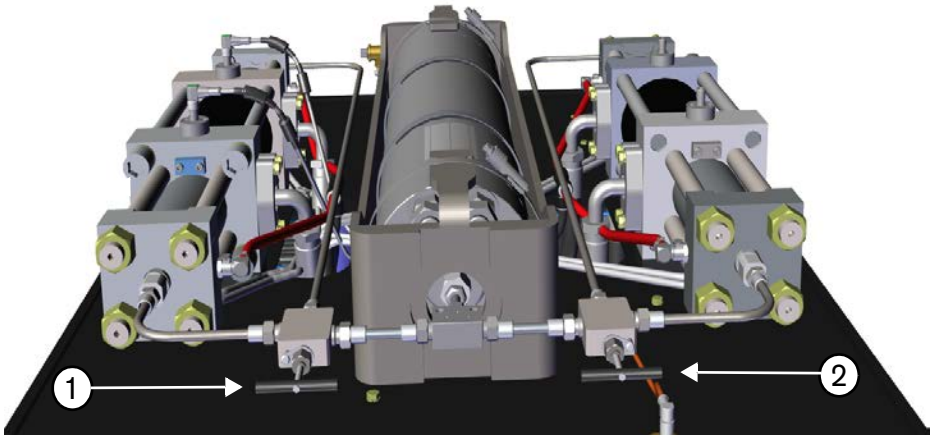

1 Front intensifier valve handle

2 Rear intensifier valve handle

ⓘ	It is possible that some water will spray from the connection when this tubing is disconnected.

7. Remove the proximity switch wires from the intensifier.

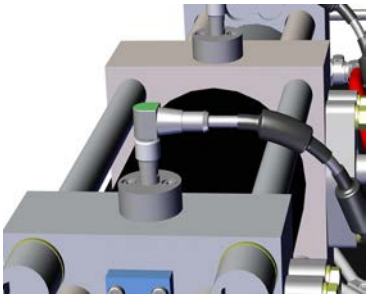

8. Push the proximity switch wires down into the nearest top deck access hole.

9. Push the proximity switch wires up through the other top deck access hole.

10. Connect the proximity switch wires.

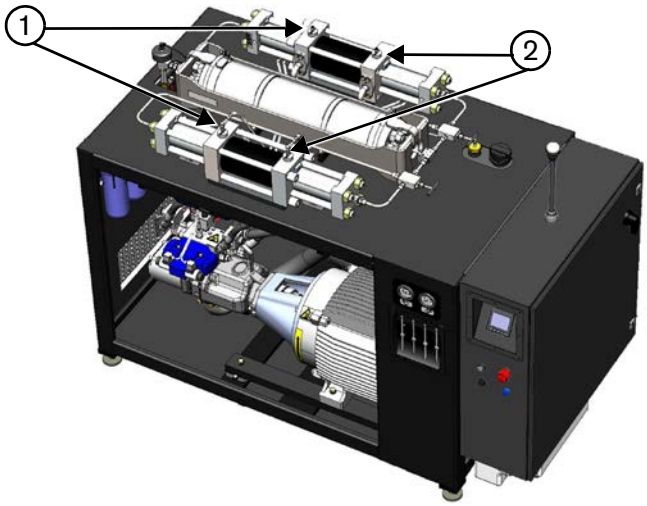

1 Left proximity switch

2 Right proximity switch

11. If there are locks on the hydraulic valve handle locking plates, remove the locks.

12. Turn the hydraulic valve handles on the pump manifold 90° to send hydraulic fluid to the intensifier that will be operated.

When the hydraulic valve handle is in this position, hydraulic fluid goes to the front intensifier.

When the hydraulic valve handle is in this position, hydraulic fluid goes to the rear intensifier.

13. Put a lock through the holes of both hydraulic valve locking plates.

The pump is ready for operation.

⚠	Make sure that the hydraulic valve handles and the high-pressure water valve handles are fully closed before removing an intensifier from the pump,

Troubleshooting

The intensifier cannot stroke if any of these are not in the correct position:

- the high-pressure water valve handles
- the proximity switch wires
- the hydraulic valve handles

4 Preventive maintenance

In this section

- Safety
- Benefits of preventive maintenance
- Training
- Tools
- Instructions for how to clean, repair, and replace pump components, intensifier components, and bleed-down valve components
- Operator interface: Maintenance screens
- Prepare for storage

i	Images in this manual are for reference purposes. It is possible that your product is not shown accurately.
	This section assumes that the user is familiar with the Safety, Operation, and Specifications of this manual.
	Keep accurate maintenance records. Records can help with predicting and preventing maintenance problems. Use the maintenance log feature to record maintenance performed on the pump and the intensifier. Refer to Record maintenance on page 127 for instructions.
	It is possible that not all of the information in this section applies to all pump models.

Safety

	Read and understand all the safety guidelines in this manual. Refer to Safety on page 19 before operating, doing maintenance on, repairing and installing the pump.
DANGER	A waterjet is a cutting tool. Keep away from high-pressure streams and leaks. Pressurized fluid can cause injuries. A high-pressure injection injury is a surgical emergency. Get medical treatment immediately for all high-pressure waterjet injuries. Delayed treatment can cause injuries or death. Abrasive waterjets eject a mixture of water and abrasive materials that can be injected into body tissues, leading to a dangerous infection.
DANGER	Doing work on this equipment while it is energized is dangerous. Personnel who maintain and repair this equipment can be injured or killed if dangerous energy is not controlled. Injuries can include burns, cuts, fractures, or electrocution. Before opening the electrical enclosure or doing maintenance or repairs on this equipment, turn **OFF** the electrical power and release water pressure and hydraulic pressure from the system. Use standard lock out–tag out procedures. Isolate all sources of electrical, mechanical, hydraulic, pneumatic, chemical, thermal, or other energy with a lockable energy-isolating device that satisfies national and local requirements. All work that requires opening the electrical enclosure or removing covers or panels from this equipment must be done only by an approved technician.
DANGER	A person who works on deenergized machinery can be injured or killed if the machinery is energized without permission. All personnel in an area where energy-control procedures are used must receive training for energy-control procedures.
DANGER	Do not stand in line with high-pressure fittings when operating this equipment. If a high-pressure fitting fails, it can cause a stream of water or hydraulic fluid to eject from the system with force.
WARNING	Personal protective equipment is recommended. If you do not use personal protective equipment, there is a risk of injury or death.
WARNING	Permit only approved personnel to operate, maintain, and repair this machinery.
WARNING	Release all high-pressure water before doing work on this equipment.

WARNING	When work must be done in a small space or an area with limited access, the access must not be blocked by ventilation ducts, hoses, pipes, or other equipment.
WARNING	Do not operate the pump without the shaft access cover and all other safety devices correctly installed.
WARNING	Make sure that all connections, fasteners, locking devices, hoses, and fittings are tight before operation.
WARNING	Do not block or remove warnings, cautions, or instructions.
CAUTION	Do not touch a hot surface. Water leaking from a high-pressure fitting or the bleed-down valve can be hot.
	All installation, repairs, and maintenance of the electrical and plumbing systems must obey national and local codes. This work should be done only by an approved technician. It is the buyer's responsibility to investigate and obey all local codes.
	Obey all safety requirements and applicable safety laws and regulations.
	Examine and clean the equipment regularly. Refer to Examine and clean the equipment on page 72. Do repairs immediately.
	Obey local protocols for recycling or disposal of parts, materials, and fluids. National and local environmental rules can apply to disposal. Refer to Recycling and end of product life on page 135

Benefits of preventive maintenance

Hypertherm recommends preventive and scheduled maintenance for all waterjet pumps. High-quality equipment that is maintained on a schedule lasts longer than equipment that is not maintained regularly. This maintenance includes adjustments, cleaning, lubrication, repairs, and replacement of parts.

- Improves reliability
- Finds possible problems before they cause unplanned downtime and become expensive repairs
- Extends the life of equipment and decreases the frequency of replacement
- Contributes positively to reputation and profits
- Gives traceability through records

Training

The employer must provide training for maintenance procedures. Retrain personnel when:

- There is a change in job assignment, machinery, or processes that can present a new danger.
- Energy-control procedures change.
- There is reason to believe there is a deficiency in a person's knowledge of the energy-control procedure.

Tools

!	Use the correct tools for maintenance procedures. Some tools are designed to make the procedure easier and to prevent damage to the equipment.
!	Personnel who maintain and repair this equipment must know how to use standard hand tools.
i	Use SAE tools for most procedures.

Special tools are recommended or necessary for some maintenance and repair procedures. This page is intended to help a user identify tools that are unfamiliar or are known by other names.

Open-ended wrench

Crowfoot wrench

Screwdriver

Standard

Phillips

O-ring pick

Seal housing removal tool

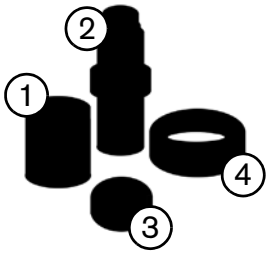

Intensifier repair tools

1 Sleeve

2 Push tool

3 Spacer

4 Locator

Preventive maintenance schedule

WARNING	**Repair or replace parts identified in the preventive maintenance schedule or if the parts show deterioration, corrosion, or damage.**

These maintenance intervals are general guidelines. Find the procedures on the page numbers listed in the column.

	Daily	500 hours	1,000 hours	1,500 hours	3,000 hours	6,000 hours	12,000 hours
General (refer to page 72)							
Examine and clean the equipment. Examine the pump for leaks or damage.	✓						
Electrical system (refer to page 76)							
Make sure that the emergency stop operates correctly. Make sure that the electrical interlock operates correctly. Examine cords, plugs, and cables.	✓						
Hydraulic system (refer to page 78)							
Check the hydraulic filter. Check the hydraulic fluid level. Check the hydraulic fluid quality.	✓						
Replace the hydraulic filter element.				✓			
Replace the hydraulic fluid.					✓		
Lubricate the primary motor bearings.						✓	
Low-pressure water system (refer to page 86)							
Check the low-pressure water pressure gauges.	✓						
Clean the Seal Maintenance Indicator tubes. Measure the air pressure in the water accumulator tank.		✓					
Low-pressure water. Test the water quality.			✓				
Replace the Seal Maintenance Indicator tubes.				✓			

	Daily	500 hours	1,000 hours	1,500 hours	3,000 hours	6,000 hours	12,000 hours
Intensifier (refer to page 96)							
Disassembling the intensifier is necessary for some of these procedures (page 99). To reduce downtime, Hypertherm recommends doing preventive maintenance on both ends of the intensifier at the same time.							
Repair the check valves and the low-pressure poppets. Install the high-pressure hoops, the high-pressure water seals, the high-pressure cylinders, and the check valves. Replace the hydraulic rod seals. Repair the high-pressure cylinders.		✓					
Replace the bleed-down valve poppet assemblies. Replace the low-pressure poppets and the poppet springs.			✓				
Replace the check valve assemblies. Replace the low-pressure poppet baskets.				✓			
Replace the high-pressure cylinders. Replace the plunger bearings. Replace the indicator pin springs.					✓		
Replace the output adapters. Replace the seal housing assemblies.						✓	
Replace the spacer tubes. Repair the hydraulic center section.							✓
Bleed-down valve (refer to page 120)							
Repair the bleed-down valve.			✓				
Replace the bleed-down valve body.					✓		

General

WARNING	Repair or replace parts identified in the preventive maintenance schedule or if the parts show deterioration, corrosion, or damage.
	Hydraulic, water, and electrical connections can become loose during shipping and normal operation. We recommend examining all connections at installation and during regular maintenance.
	Identify the source of a leak and correct the problem. Refer to Leaks on page 74. A leak can cause damage to the water fittings.
	When replacing wiring, use only the same size, type, and color as the original wiring.
	Coordinate maintenance and repairs with facility and safety staff.
	Keep the work area clean and dry. Clean fluid spills immediately. Use catch basins under areas where water or hydraulic fluid can spill during maintenance or repair procedures.
	Keep spare parts and repair kits available.
	Some referenced parts are included in kits. Refer to Parts lists on page 137 for information.
	Keep the work area clean and dry. Clean fluid spills immediately. Use catch basins under areas where water or hydraulic fluid can spill during maintenance or repair procedures.

Examine and clean the equipment

Do this every work shift.

1. Check the dirty water container.

	Refer to local regulations regarding waste water. Environmental rules can apply to disposal.
	Water in the container could have oil in it.

2. Empty the container, if necessary

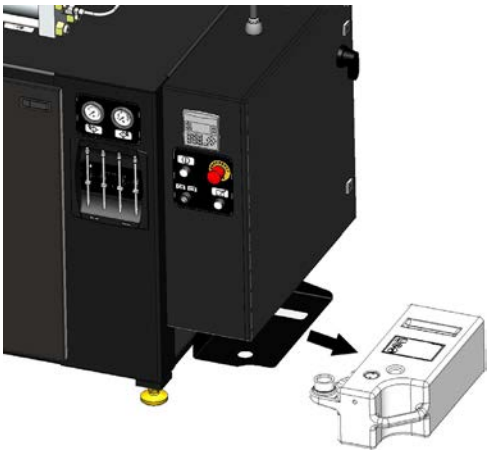

3. Make sure the drip tray is empty and clean.

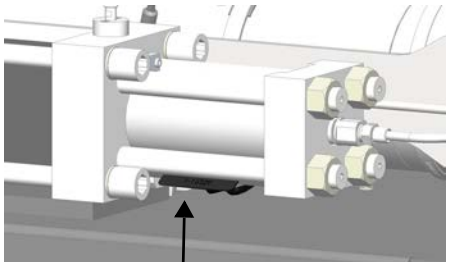

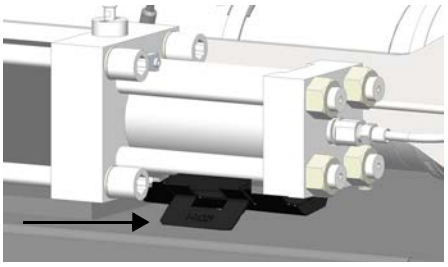

4. To remove the tray, push down on the tab until the tray releases. Pull the tray toward you.

⚠	Do not pull the tray out fully. There are 2 tubes attached to the rear of the tray that must be disconnected first.

5. To install the tray, put the rear edge of the tray between the stud and the high-pressure cylinder. Push up on the tray tab until the tray makes a click.

6. Make sure that all warning decals are visible and legible.

7. Contact Hypertherm for replacement decals.

8. Clean the operator interface, if necessary.

⚠	To prevent damage to the operator interface: ● Do not use cleaners that contain alcohol, ammonia, acetone, phosphates, or ethylene glycol. ● Do not push hard on the touchscreen. ● Do not use paper towels, abrasive cloth, or dirty rags. ● Do not put liquid directly onto the touchscreen. ● Do not scratch the surface.

- Gently wipe the touchscreen and keys with a clean microfiber cloth.
- Use a cleaner made for touchscreens or use a 1:1 solution of distilled water and white vinegar.

9. Clean the top cover, if necessary.

   a. Use a clean microfiber cloth with a cleaner made for acrylic or a solution of clean water and mild dish soap. Gently dab the surface.
   b. After wiping the entire panel, use a dry section of the microfiber cloth to dry and buff the plastic.
   c. Do this procedure again until the panel is clean

⚠	To prevent damage to the panels: ● Do not use cleaners that contain alcohol, ammonia, or acetone. ● Do not use paper towels, abrasive cloth, or dirty rags

10. Examine the Seal Maintenance Indicator (SMI) tubes for leaks and debris. To clean the tubes, Refer to Clean the Seal Maintenance Indicator tubes on page 86.

Examine the pump for leaks or damage

Do this every work shift.

Do this task when the pump is running and the system is pressurized.

1. Look for hydraulic fluid leaks. Monitor these areas:
   - Hydraulic fluid tank access cover
   - Hydraulic connections
   - Valves
   - Top and bottom pump decks
2. Examine the low-pressure tubes and the hoses for leaks.
3. Examine the bleed-down valve for leaks or damage.

4. Examine the weep holes in the high-pressure ends for leaks. Water leaking from a weep hole is a sign of a faulty part or a loose connection.

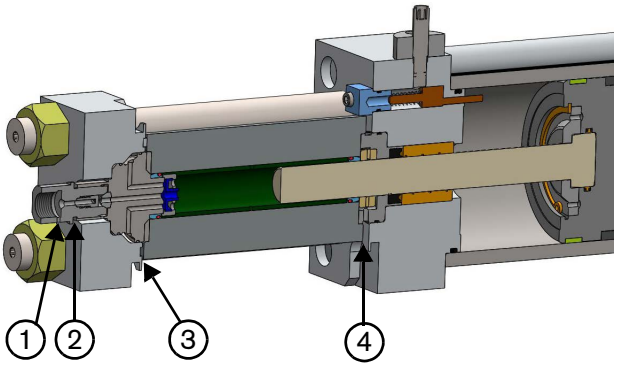

1 Output adapter leak
2 High-pressure seat leak
3 Static seal leak
4 Dynamic seal leak

The SMI monitors the rate of drops from the static seal and the dynamic seal.

5. Examine the high-pressure tubing for leaks.

6. Look for deterioration, damage, or other conditions that can interfere with operation.

Electrical system

Make sure that the emergency stop operates correctly

Do this every work shift.

The ***EMERGENCY STOP*** button is found on the operation panel.

Do this task when the pump is running.

Refer to Emergency stop on page 60.

Make sure that the electrical interlock operates correctly

Do this every work shift.

The electrical interlock is optional on all models with top covers.

Do this task when the pump is running.

1. Open the top cover.
2. The result is the same as described for when the EMERGENCY STOP button is pushed. Refer to Emergency stop on page 60.

Examine cords, plugs, and cables

Do this every work shift.

Do this task when the pump is not running.

1. Examine electrical cords and cables for kinks or damage to the insulation.
2. Examine electrical plugs and other electrical connections for corrosion or damage.

3. Make sure that the SMI cable harness is not damaged and that the connections are not loose.

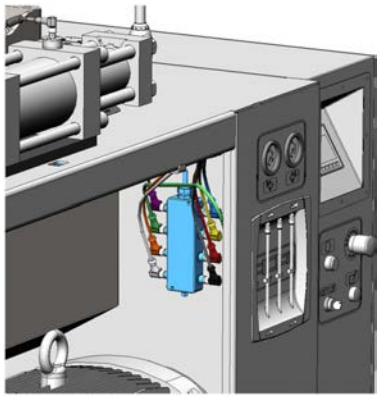

4. The cable harness connects to the junction box (shown) and to the rear of the SMI.

Hydraulic system

Check the hydraulic filter

Do this every work shift.

Replace the hydraulic filter:

- Every 1,500 hours
- When the white indicator bar stays in the red zone while the pump is at operating temperature

Refer to Replace the hydraulic filter element on page 80 for instructions.

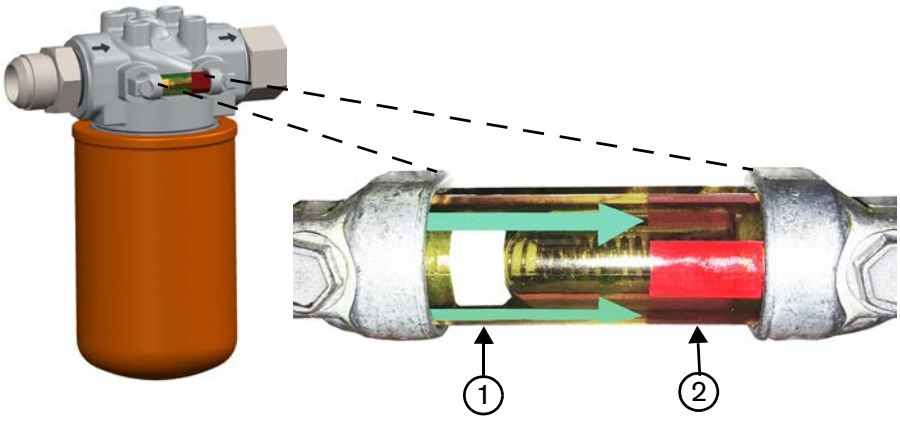

1 White indicator bar

2 Red zone

Parts, tools, and materials

Standard screwdriver

Do this task when the pump is running at operating temperature.

1. Use a standard screwdriver to remove the pump cover.
2. Make sure that the white indicator bar is not in the red zone.

Check the hydraulic fluid level

Do this every work shift.

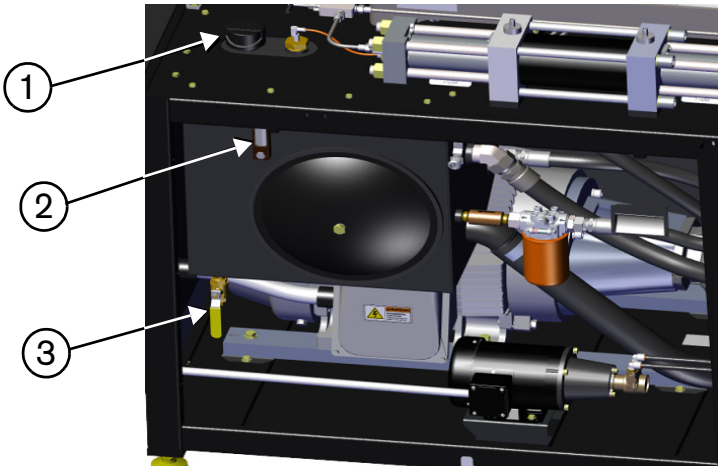

1 Filler-breather cap
2 Sight gauge
3 Drain valve

Parts, tools, and materials

Standard screwdriver

Do this task when the pump is running.

1. Use a standard screwdriver to remove the pump cover.
2. Make sure that the hydraulic fluid level is at the top mark on the sight gauge. Add hydraulic fluid, if necessary.

Add hydraulic fluid

⚠	Do not put too much hydraulic fluid in the tank.

The capacity of the hydraulic fluid tank is 151 L (40 gallons).

Parts, tools, and materials

Antiwear (AW) mineral oil or synthetic hydraulic fluid, ISO viscosity grade (VG) 32 or 46

Recommended materials

Clean funnel

Do this task when the pump is not running.

1. Make sure that the drain valve is closed.
2. Remove the filler-breather cap on top of the tank.
3. Fill the tank with hydraulic fluid until the fluid is at the top mark on the sight gauge.
4. Install the filler-breather cap.

Check the hydraulic fluid quality

Do this every work shift.

Replace the hydraulic fluid:

- If it is dark or milky in color
- If it has a strong odor
- After every 3,000 hours of operation

i	Contact a hydraulic fluid supplier for a precise report about your hydraulic fluid quality.

Do this task when the pump is not running.

1. Make sure that the drain valve is closed.
2. Look through the sight gauge to see the color of the hydraulic fluid. Good hydraulic fluid is almost transparent.
3. Remove the filler-breather cap on top of the tank.
4. Smell the hydraulic fluid. Good hydraulic fluid has almost no odor.

Replace the hydraulic filter element

Replace the hydraulic filter:

- Every 1,500 hours
- When the white indicator bar stays in the red zone while the pump is at operating temperature

Refer to Replace the hydraulic filter element on page 80 for instructions.

Parts, tools, and materials

Hydraulic fluid replacement kit

1-12084 DynaMAX 5-series standard Tool kit

Antiwear (AW) mineral oil or synthetic hydraulic fluid, ISO viscosity grade (VG) 32 or 46

Torque wrench

15/16-inch crowfoot wrench or socket

Recommended materials

Clean funnel

Clean towels

Do this task when the pump is not running.

1. Remove the used filter from the filter head.
2. Put clean hydraulic fluid on the gasket on the new filter.
3. Twist the filter onto the filter head.
4. Tighten the filter with a strap wrench.
5. Turn **ON** the pump in cooling mode.
6. Monitor for leaks.
7. Check the hydraulic fluid level. Add hydraulic fluid, if necessary. Refer to page 79 for instructions.

Replace the hydraulic fluid

Do this every 3,000 hours.
Install a new hydraulic filter and filler-breather cap when replacing the hydraulic fluid.

⚠	Do not put too much hydraulic fluid in the tank.
ℹ	If it is not possible to analyze a sample of the hydraulic fluid. Hypertherm recommends replacing the hydraulic fluid every 3,000 hours.

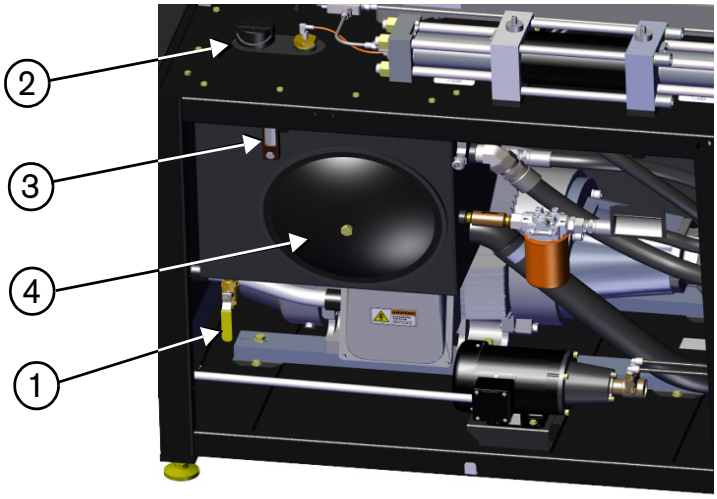

1 Drain valve
2 Filler-breather cap
3 Sight gauge
4 Access cover (Hydraulic filter, not shown)

Parts, tools, and materials

Hydraulic fluid replacement kit

1-12084 DynaMAX 5-series standard Tool kit

Antiwear (AW) mineral oil or synthetic hydraulic fluid, ISO viscosity grade (VG) 32 or 46

Clean towels

Isopropyl alcohol

Standard 9/16-inch open-ended wrench (for the drain valve plug)

Standard 15/16-inch crowfoot wrench or socket (for the access cover)

Torque wrench

Strap wrench

Hose or pipe for draining hydraulic fluid

Container for used hydraulic fluid

Recommended materials

Clean funnel

Do this task when the pump is not running.

1. Remove the drain valve plug.
2. Open the drain valve lever on the bottom of the hydraulic fluid tank. Use a hose or a pipe to direct the hydraulic fluid into a container.

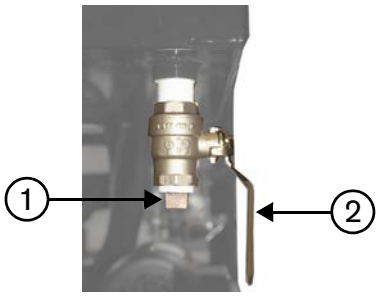

1 Drain valve plug

2 Drain valve lever

3. Disconnect the lower ends of the hydraulic hoses to drain them.
4. Install a new hydraulic filter. Refer to Replace the hydraulic filter element on page 80 for instructions.
5. Remove the access cover on the tank.
6. Use a strap wrench to remove the suction strainers in the tank.

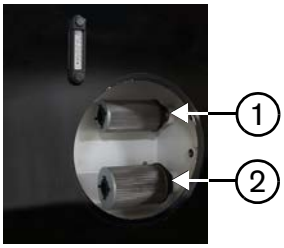

1 Suction strainer, 1-1/2 inch (to the gear pump)

2 Suction strainer, 2-1/2 inch (to the hydraulic pump)

7. Clean the inner surfaces of the tank with towels and isopropyl alcohol. Make sure that no debris is left in the bottom of the tank.

CAUTION	Remove all towels from the tank before putting hydraulic fluid in it.
	Do not use soap, detergent, or solvents.

8. Install new suction strainers.
9. Tighten the suction strainer by hand and then turn it 90° more.
10. Close the drain valve.
11. Install a drain valve plug.
12. Install a new crush washer and bolt.
13. Install a new access cover gasket.
14. Replace the access cover on the tank. Torque the nut to 27 N·m (20 lbf·ft). Refer to Hydraulic fluid tank access cover on page 180
15. Remove the used filler-breather cap.
16. Fill the tank with hydraulic fluid until the fluid is at the top mark on the sight gauge.
17. Install a new filler-breather cap.
18. Discard the used parts.
19. Turn ON the pump in cooling mode. Let it operate for 15 to 20 minutes.
20. Monitor for leaks.
21. Add hydraulic fluid, if necessary. Refer to Add hydraulic fluid on page 79.
22. Operate the pump in pierce-pressure mode for 15 to 20 minutes.

If air is in the hydraulic system, the pump can be noisy during operation. Refer to The pump makes noise during operation on page 168.

Lubricate the primary motor bearings

Do this every 6,000 hours.

CAUTION	Correct lubrication is important for motor performance. Use the correct types and amounts of grease and oil.
CAUTION	the bearing can overheat if too much or not enough grease is used to lubricate the bearing.
	Use the postmaintenance start procedure after working on the primary motor. Refer to Postmaintenance start procedure on page 131.
	Do this procedure on both ends of the motor.
	Most handheld pump grease have an output of 1.25 grams of grease per pump. Check the manufacture of the grease gun.

Parts, tools, and materials

Low-pressure handheld grease gun

Electric-motor bearing grease, NLGI grade 2

Clean towels

Recommended greases

Exxon Polyrex™ EM
Motors are lubricated with this grease at the factory

Do this task when the pump is running.

1. Remove the grease fitting cap from the motor.

2. Make sure the grease fittings are clean.

3. Remove a relief plug from the bottom of the motor.

4. Attach the grease gun coupler to the grease fitting on the same end of the motor as the open relief plug.

5. Use the grease gun to put the specific quantity of grease in the motor.

DynaMAX 550P	DynaMAX 560P	DynaMAX 575P
30 grams	40 grams	40 grams

CAUTION	It is possible that grease does not come out of the grease outlet when the new grease is pumped in. Use only the recommended volume.

6. Replace the grease cap.

7. Let the motor operate with the grease outlet open for 20 to 30 minutes.

8. Clean grease from the outside of the grease outlet and replace the relief plug.

CAUTION	It is possible that grease does not come out of the grease outlet when the new grease is pumped in. Use only the recommended volume.

9. Do this procedure again on the other end of the motor.

CAUTION	It is possible that grease does not come out of the grease outlet when the new grease is pumped in. Use only the recommended volume.

Low-pressure water system

Examine the transport tubes

Do this every 500 hours and when the high-pressure seals are replaced.

Make sure that the transport tube routing is correct.

Good tube routing

Bad tube routing

Clean the Seal Maintenance Indicator tubes

Do this every 500 hours and when the high-pressure seals are replaced.
Replace the tubes every 1,500 hours.

The inner surfaces of the SMI tubes become dirty over time. Dirty tubes can cause a fluid monitoring sensor error.

Parts, tools, and materials

Replacement kit, SMI tubes,
DynaMAX 550P/560P/575P
Refer to the DynaMAX standard tool kit.

Do this task when the pump is off.

1. Disconnect a tube by pulling the tube away from the clip.

2. Disconnect the tube from the push-to-connect fitting on top of the SMI by pushing up on the collar of the fitting while pulling down on the tube.

3. Use the tube cleaning brush to clean the inner surfaces of the tube.

.

Before cleaning After cleaning

4. Rinse the tube with clean water.
5. Connect the tube to the push-to-connect fitting on top of the SMI.
6. Push the tube into the clip.
7. Do this procedure for all 4 tubes.

Replace the Seal Maintenance Indicator tubes

Do this every 1,500 hours.

The inner surfaces of the SMI tubes become dirty over time. Dirty tubes can cause a fluid monitoring sensor error.

Parts, tools, and materials

Refer to Seal Maintenance Indicator™ (SMI) assembly on page 144.

Do this task when the pump is off.

1. Do steps 1 and 2 on page 87 to remove the tubes.
2. Do steps 5 and 6 on page 87 to install the new tubes.

Measure the air pressure in the water accumulator tank

Do this every 500 hours.

Parts, tools, and materials

Air pressure gauge (Schrader valve)

Compressed air source

Do this task when the pump is off.

1. Make sure that the water pressure gauges show 0.0 bar (0 psi).
2. Remove the valve stem cap from the water accumulator tank.

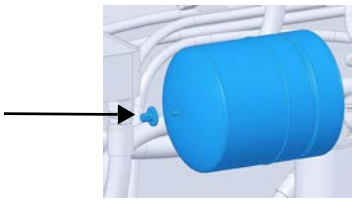

3. Use an air pressure gauge to measure the pressure in the tank.

Pump Category	Optimal pressure
DynaMAX 550P-560P-575P	3.5 bar (50 psi)

4. Add compressed air to increase the pressure in the tank. To reduce pressure in the tank, push on the valve stem to release air.

5. Do this procedure again until the pressure is at the correct value.

6. Install the valve stem cap.

Check the low-pressure water pressure gauges

Replace the water filters after every 1,000 hours of operation or if the difference between the values on the prefilter water-pressure gauge and the postfilter water-pressure gauge is lower than 0.7 bar (10 psi).

The prefilter water-pressure gauge shows the water pressure before the water goes through the filters. The postfilter water-pressure gauge shows the water pressure after the water goes through the filters.

The usual operating range is 2.8 bar to 7.6 bar (40 psi to 110 psi).

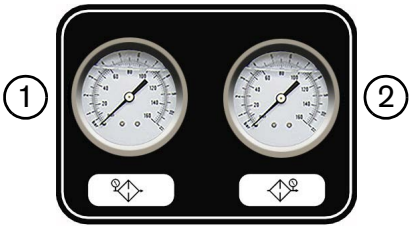

1 Prefilter water-pressure gauge

2 Postfilter water-pressure gauge

Do this task when the pump is running.

1. Subtract the value shown on the postfilter water pressure from the value shown on the prefilter water pressure.

2. Replace the water filters if the difference between the values on the prefilter water-pressure gauge and the postfilter water-pressure gauge is lower than 0.7 bar (10 psi).

Air cooler

Do this task:
- every 1,000 hours
- if you receive a Fault 1: Hydraulic Fluid > 65C alarm

CAUTION	Detergent can give better cleaning results. Think about the environment when selecting and using cleaning chemicals. Detergent must be compatible with aluminum.
CAUTION	Protect the motor and all electronics during the cleaning process.

Parts, tools, and materials

Antiwear (AW) mineral oil or synthetic hydraulic fluid, ISO viscosity grade (VG) 32 or 46

Compressed air source

Pressurized-water source or a steam cleaner

Recommended materials

Aluminum-compatible detergent

Ethylene perchlorate detergent

Clean the air side of the cooler

CAUTION	To prevent damage, the stream of water or air must be parallel to the fin. Point the water stream against the air direction.

Do this when the pump it not running.

1. Refer to the label on the cooler to find the cooler's air direction.
2. Clean oil and grease off of the cooler with compressed air, pressurized water, or a steam cleaner. Direct the cleaning stream against the cooler's air direction.
3. After cleaning, dry the cooler.

Clean the hydraulic fluid side of the cooler

Do this task when the pump is not running.

1. Disassemble the cooler to find the degree of contamination.

2. If contamination is moderate, connect the oil side to a closed cleaning system with a pump and a filter.

i	Ethylene perchlorate detergent can be used. Pump the detergent through the cooler for 210 minutes.

3. If contamination is very bad, use an oil carbon detergent.
4. Rinse cleaned surfaces for 30 minutes.
5. Use compressed air to remove remaining detergent.
6. Rinse the cooler with operation or equivalent oil.

Low-pressure water

Do this every 1,000 hours.

⚠	Replace all of the filters at the same time.

Replace the water filters

Parts, tools, and materials

Water filter cartridge, 0.22 micron, 10 inch

Water filter cartridge, 1.0 micron, 10 inch

Water filter cartridge, 10 micron, 10 inch

Filter wrench
1-12084 DynaMAX 5-series standard Tool kit

Recommended materials

Bucket or pail

Do this task when the pump is not running.

1. Turn **OFF** the water to the pump.
2. Use a filter wrench to loosen each of the filter canisters.
3. Make sure that the filter canisters are empty.
4. Remove the used filter cartridges from the filter canisters.
5. Put a new 0.22-micron filter cartridge in the housing with the plug at the bottom and the gray rubber gasket at the top.
6. Put a new filter cartridge in the 1-micron filter canister and the 10-micron filter canister.

The 1-micron and the 10-micron filters do not have a designated top or bottom.

7. Install the filters and the housings with the 10-micron water filter nearest the rear of the pump.

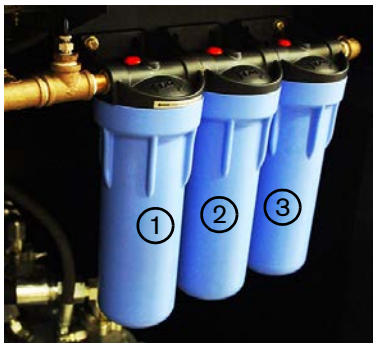

1 10-micron water filter
2 1-micron water filter
3 0.22-micron water filter

8. Discard the used parts.
9. Use a filter wrench to tighten each of the filter canisters.
10. Close the water valve.
11. Turn **ON** the water to the pump.
12. Turn **ON** the pump in cooling mode.
13. Push the water filter purge buttons until water comes out from under each button.

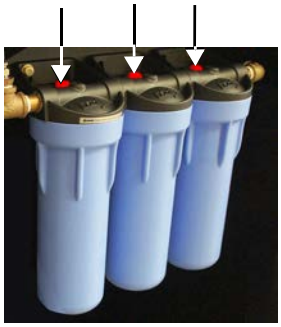

14. On the operator interface, touch the RUN symbol.
15. Make sure that the difference between the values on the prefilter water-pressure gauge and the postfilter water-pressure gauge is lower than 0.7 bar (10 psi).

16. Monitor for leaks.

Test the water quality

Do this every 1,000 hours.

⚠	A TDS level that is lower than 0.0025% (25 ppm) can harm waterjet parts and requires the use of nonmetallic or stainless steel fittings. A TDS value of lower than 0.0005% (5 ppm) can damage stainless steel parts.
⚠	If a water line, a fitting, or a valve could be frozen, do not operate the pump. Thaw the equipment until water moves easily through the water circuit.
!	Treat water with a TDS level that is higher than 0.015% (150 ppm) with reverse osmosis.

Some TDS meters must be calibrated before use. For best results, calibrate the meter at 25°C (77°F). Refer to the instructions supplied with the TDS meter.

If multiple readings are taken, turn **OFF** the TDS meter between readings.

Parts, tools, and materials

TDS meter

Container for a water sample

Clean, deionized water or filtered water

Recommended materials

Bucket or pail

Do this task when the pump is off.

1. Remove a low-pressure water supply tube from the intensifier.

i	When a low-pressure fitting is disconnected, water could spray from the fitting.

2. Turn **ON** the pump in cooling mode.
3. Take a sample of the water from the supply tube. Make sure that the water is clear and odorless.
4. Connect the low-pressure water supply tube to the intensifier.
5. Make sure that the water is clear and odorless.

6. Put the TDS meter in the water sample up to the maximum immersion level (5 cm/2 inches). Tap the meter gently to release air bubbles.

CAUTION	The meter is not waterproof. Do not submerge the unit in water.

Wait approximately 20 seconds for the reading to become stable.

7. Test the pH. the optimal pH measurement is between 6.0 and 8.0.

8. Test the silica ($Si0_2$) content. Compare the reading to the TDS table. The optimal range is 0.0025% to 0.015% (25 ppm to 150 ppm).

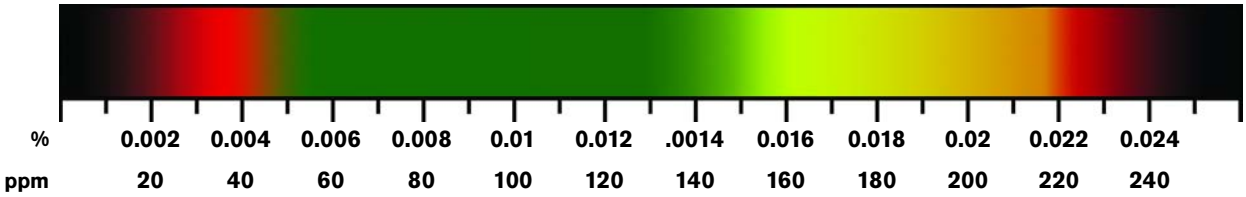

Unsatisfactory	Optimal	Satisfactory	Unsatisfactory
Lower than 0.0025% (25 ppm) Use nonmetallic or stainless-steel fittings	0.0025% to 0.015% (25 ppm to 150 ppm) —	0.015% to 0.022% (150 ppm to 220 ppm) A reverse osmosis system can be used to remove TDS	Higher than 0.022% (220 ppm) A reverse osmosis system should be used to remove TDS

9. Test the water hardness. The result must be equal to or lower than 0.006% (60 ppm/3.5 grains).

10. Test the total dissolved solids (TDS) concentration.

11. Rinse the meter in clean, deionized water or filtered water after use.

Test the total dissolved solids (TDS) concentration

CAUTION	The TDS meter is not waterproof. Do not submerge the meter in water.
i	Some TDS meters must be calibrated before use. For best results, calibrate the meter at 25°C (77°F).

The TDS measures the total concentration of dissolved substances in postfilter water. Dissolved solids cause deposits that can cause damage to check valves, seals, orifices, and other consumables. the optimal range is 0.0025% to 0.015% (25 ppm to 150 ppm).

1. Disengage the intensifier.

a. On the operator interface, touch the adjustment symbol to open the primary adjustments screen.

b. Touch this symbol to open the **Intensifier Control** screen.

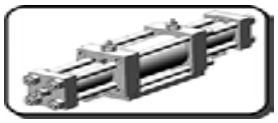

c. Touch the **Intensifier On** box. This engages and disengages the intensifier.

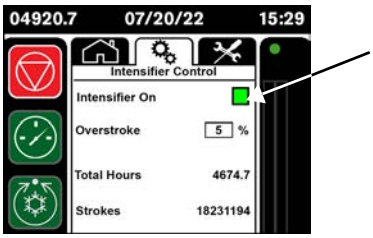

i	Refer to Intensifier Control on page 216 for instructions.

2. Set the target water pressure to 345 bar (5,000 psi).

i	Refer to Operation panel on page 48 for instructions.

3. Turn **ON** the pump in cooling mode.

4. Disconnect a low-pressure water supply tube after the water filter.

i	When a low-pressure fitting is disconnected, water could spray from the fitting.

5. Take a sample of water from the tube.

6. Connect the low-pressure water supply tube.

7. Put the TDS meter in the water sample up to the maximum immersion level (5 cm/2 inches). Tap the meter gently to release air bubbles.

i	Wait 20 seconds for the reading to become stable
i	If multiple readings are taken, turn **OFF** the TDS meter between readings.

8. Compare the reading using the table starting on **page 93**.

9. Rinse the meter in clean, deionized water or filtered water after use.

10. Engage the intensifier.

Intensifier

Every 500 hours ▪ Repair the check valve and the low pressure poppets. ▪ Repair the high-pressure cylinders. ▪ Replace the high-pressure seal cartridges. **Every 1,000 hours** ▪ Replace the high-pressure poppet assemblies. ▪ Replace the low-pressure poppets. **Every 1,500 hours** ▪ Flip the high-pressure cylinders.	**Every 3,000 hours** ▪ Replace the high-pressure cylinders. ▪ Replace the check valve assemblies. **Every 6,000 hours** ▪ Replace the output adapters. ▪ Replace the seal housing assemblies. **Every 6,000 hours** ▪ Replace the spacer tubes. ▪ Repair the hydraulic center section.

CAUTION	To prevent causing damage or premature failure, use 2 wrenches when loosening or tightening a high-pressure connection. Always tighten fittings to the specified torque.
CAUTION	Do not use an adjustable wrench on high-pressure fittings.
i	Use clean hands when changing high-pressure parts.
i	To reduce downtime, Hypertherm recommends doing preventive maintenance on both ends of the intensifier at the same time.

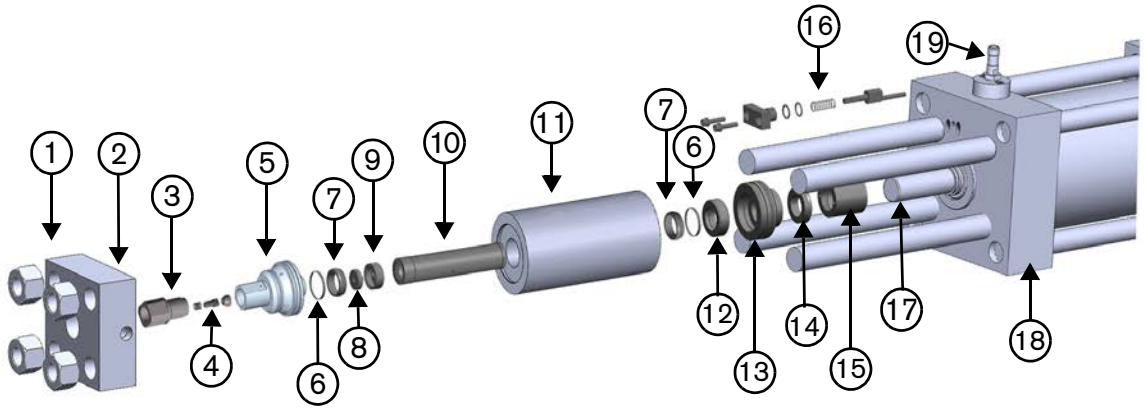

1 High-pressure end cap and High-pressure end cap nut (4)
2 High-pressure end cap gasket, not visible
3 Output adapter
4 Bleed-down valve poppet assembly
   - High-pressure poppet seat
   - High-pressure poppet
5 Check valve assembly
6 High-pressure hoop
7 High-pressure water seal
8 Low-pressure poppet (spring not shown)
9 Low-pressure poppet basket
10 Spacer tube
11 High-pressure cylinder
12 High-pressure seal backup (bronze)
13 Seal housing
14 Hydraulic rod seal, 1 inch
15 Plunger bearing
16 Indicator pin assembly
   - Indicator pin
   - Indicator pin cap

   Indicator pin spring
17 Plunger
18 Hydraulic end cap
19 Proximity switch

Prepare to do maintenance on the intensifier

WARNING	Use 2 wrenches when loosening or tightening a high-pressure connection to prevent causing damage or premature failure. Do not tighten a fitting too much. The fitting can fail.
WARNING	Do not use an adjustable wrench on high-pressure fittings.
	Use clean hands when changing high-pressure parts.

Parts, tools, and materials

13/16-inch open-ended wrench or socket
(for the high-pressure water fitting)

1-inch open-ended wrench
(for the output adapter)

1-1/16-inch open-ended wrench
(for the high-pressure water fitting)

Do this task when the pump is running in cooling mode.

1. On the operator interface, touch the maintenance symbol to open the primary maintenance screen.

2. Touch the pump maintenance symbol to open the intensifier maintenance screen.
3. Touch a symbol to shift the intensifier plunger to the left or to the right.

i	Doing maintenance on the high-pressure end is easier when the plunger is moved to that end.

4. Turn **OFF** the pump.
5. Turn **OFF** power from the primary utility source. Use standard lock out–tag out procedures.
6. Turn **OFF** the water to the pump.
7. Make sure that the water pressure gauges show 0.0 bar (0 psi).

8. Push the button on the quick-disconnect fitting to remove the high-pressure tubing from the intensifier.

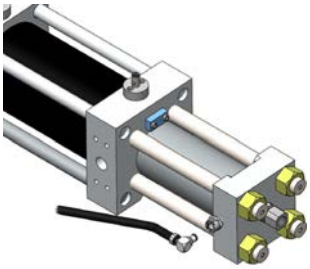

Disassemble the intensifier

⚠	Clean and examine parts that will be replaced to identify wear patterns or damage that can show other problems.
⚠	Clean each part with a towel and isopropyl alcohol. Examine all parts for deterioration, corrosion, or damage. Do not use soap, detergent, or solvents.
⚠	Put the parts on a clean, dry surface.

Refer to Parts lists on page 137.

Remove the output adapter and the bleed-down valve poppet assembly

Replace the bleed-down valve poppet assemblies every 1,000 hours.

Replace the output adapter every 6,000 hours.

⚠	The high-pressure poppet seat can cause cracks, erosion marks, or dents in the output adapter.
⚠	If a poppet part is damaged, replace all 3 components.

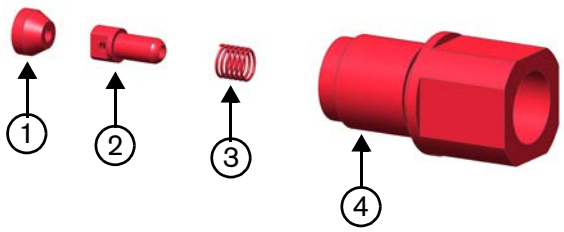

1 High-pressure poppet seat
2 High-pressure poppet
3 High-pressure poppet spring
4 Output adapter

Parts, tools, and materials

Clean towels

Isopropyl alcohol

1-inch open-ended wrench

Cotton-tipped applicator

1. Use an open-ended wrench to loosen the output adapter. Remove the output adapter from the check valve.
2. Use a cotton-tipped applicator to guide the high-pressure poppet seat out of the check valve. Tap the output adapter gently on a wooden or other soft surface to eject the poppet from the output adapter.

Remove the high-pressure end cap

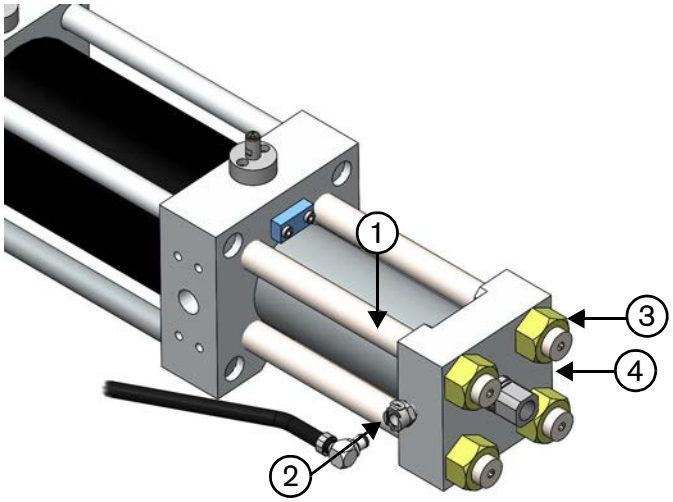

1	Stud	**3**	High-pressure end cap nut
2	Low-pressure water fitting	**4**	High-pressure end cap

Parts, tools, and materials

Clean towels

Isopropyl alcohol

Square drive socket, 1-1/2 inch × 3/4 inch (included in the 1-12084 DynaMAX 5-series standard Tool kit.

1. Remove the end cap nuts.
2. Pull the high-pressure end cap off.
3. Remove the end cap gasket.

Remove the high-pressure cylinder assembly and the check valve assemblies

Replace the check valves every 2,000 hours.

Replace the high-pressure cylinder assemblies:

- every 3,000 hours
- if the cylinder is chipped or cracked

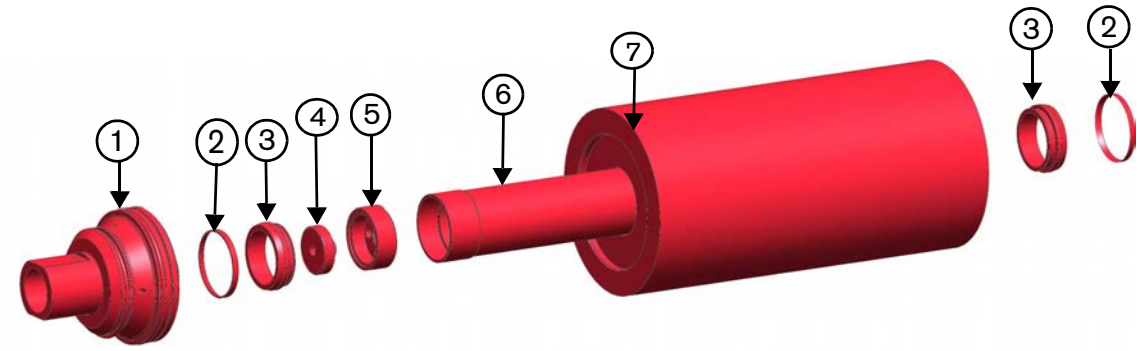

1 Check valve assembly
2 High-pressure hoop
3 High-pressure water seal
4 Low-pressure poppet
5 Low-pressure poppet basket
6 Spacer tube
7 High-pressure cylinder

Parts, tools, and materials

Clean towels

Isopropyl alcohol

Seal installation tools

Rubber mallet

1. Remove the high-pressure cylinder and the check valve from the plunger.
2. Remove the check valve by rolling the cylinder and tapping the check valve with a rubber mallet. Tap at an angle away from the cylinder.
3. Tilt the cylinder so that the low-pressure poppet comes out.
4. Put the cylinder on the seal-locating ring.
5. Put the stepped end of the push tool against the seal and tap on the end of the push tool with a rubber mallet to push the bottom seal and the hoop out of the high-pressure cylinder.
6. Turn the cylinder over and put it on the locating ring.
7. Prevent the spacer tube from sliding out when the cylinder is turned over.

8. Put the nonstepped end of the push tool against the spacer tube and tap on the end of the push tool with a rubber mallet to push the seal and the hoop out of the high-pressure cylinder.

9. Take the spacer tube out of the cylinder.

10. Disassemble all of the parts.

Remove the plunger bearing and the seal housing assembly

Replace the plunger bearings:
- every 3,000 hours
- when replacing the high-pressure cylinder

Replace the seal housing assemblies every 6,000 hours.

i	Remove the proximity switch from the hydraulic end cap to make this procedure easier.

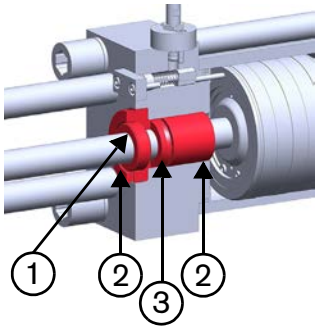

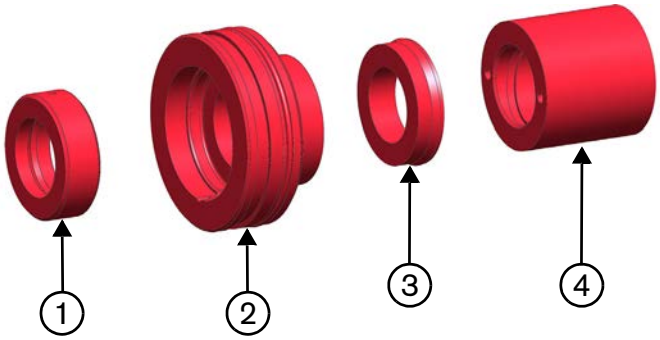

1 High-pressure seal backup (bronze)
2 Seal housing
3 Hydraulic rod seal, 1 inch
4 Plunger bearing

Parts, tools, and materials

Clean towels

Isopropyl alcohol

Two 10-32 stainless steel screws
(to remove the plunger bearing)

Seal housing removal tool

1/8-inch hex wrench
(for the seal housing removal tool)

O-ring pick (or similar tool)

1. Put the seal housing removal tool into the groove on the seal housing.

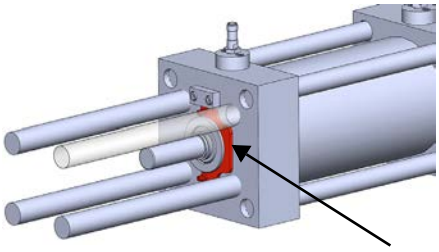

2. Use a hex wrench to turn the screws on the seal housing removal tool.

Turn the screws on one side and then the other so that the tool pulls the housing straight out of the hydraulic end cap.

3. Pull the seal housing and the high-pressure seal backup off the plunger.

i	If the rod seal does not come out of the hydraulic end cap with the seal housing, use an O-ring pick or a similar tool to pry it out. Be careful to not scratch the plunger.

4. Remove the high-pressure seal backup and the O-ring from the seal housing.

5. Install the 10-32 stainless steel screws in the threaded holes in the plunger bearing. Use the screws to pull the plunger bearing out of the hydraulic end cap.

6. Remove the plunger bearing from the plunger.

Remove the indicator pin assembly

Replace the indicator pin springs every 3,000 hours.

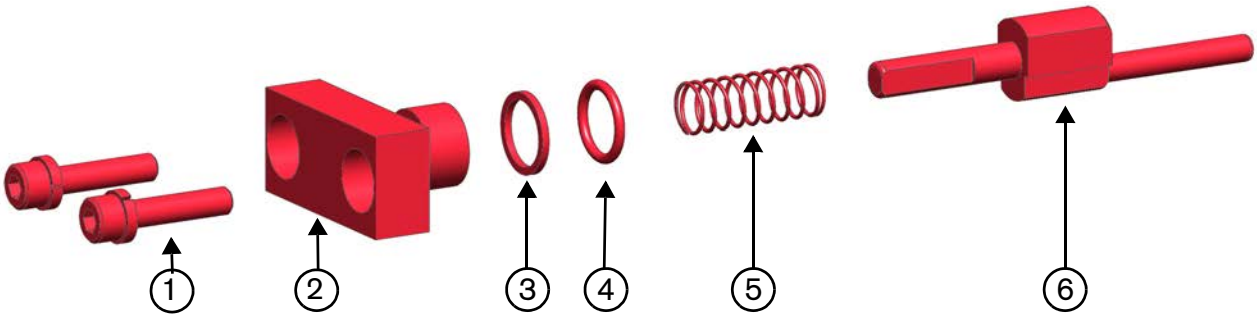

1 Cap screw and lock washer
2 Indicator pin cap
3 O-ring backup, -013
4 Indicator pin O-ring, -013
5 Indicator pin spring
6 Indicator pin

Parts, tools, and materials

Clean towels

Isopropyl alcohol

5/32-inch hex wrench

1. Use a hex wrench to remove the socket-head cap screws and the lock washers from the indicator pin cap.
2. Pull the indicator pin cap out of the hydraulic end cap.
3. If the O-ring backup and the O-ring are being replaced, remove them from the indicator pin cap.
4. Remove the spring from the indicator pin.
5. Remove the indicator pin from the indicator pin hole in the hydraulic end cap.

Repair the check valves and the low-pressure poppets

Repair the check valves every 500 hours. Replace the low-pressure poppets every 1,000 hours.

⚠	Do not rock the part or use too much pressure. Doing so can cause damage to the part face.

This procedure is for a moderately worn check valve. Replace very worn components.

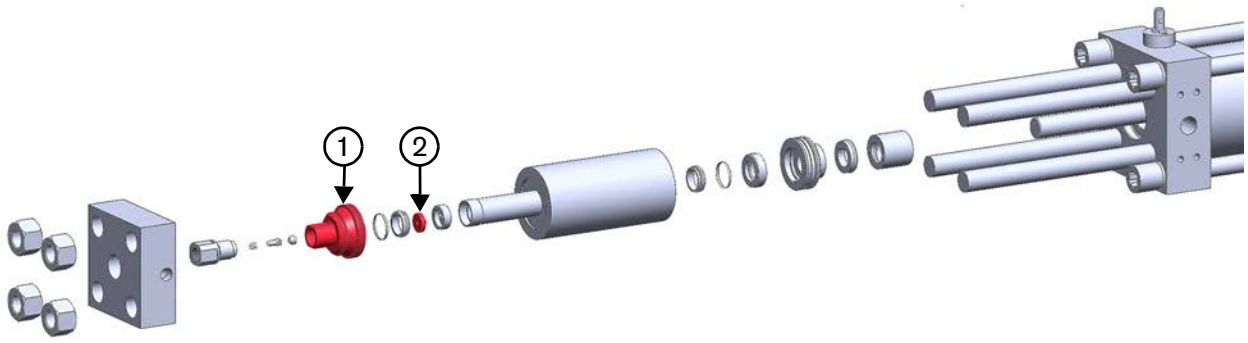

1 Check valve assembly

2 Low-pressure poppet

Parts, tools, and materials

12-micron lapping paper
(included in the DynaMAX standard tool kit.)

Granite lapping block
(included in the DynaMAX standard tool kit.)

Masking tape

Isopropyl alcohol

Clean towels

1. Tape a sheet of lapping paper on a granite lapping block. Make sure that the paper is smooth and flat.
2. Put the check valve or poppet face flat on the lapping paper and move it back and forth. Apply light pressure.

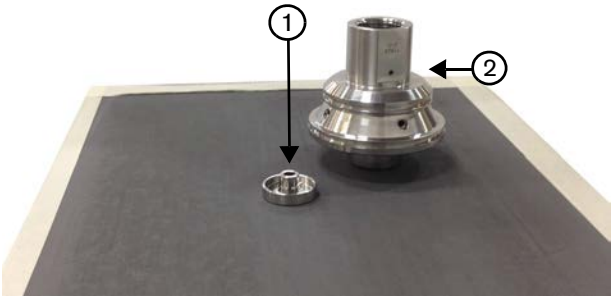

3. After each stroke, turn the flat face of the part 45°.
4. Do this procedure again until the face is smooth and flat and has an almost mirrored finish.

Repair the high-pressure cylinders

Repair the high-pressure cylinders every 500 hours.

Replace the high-pressure cylinders:

- every 3,000 hours
- if the cylinder is chipped or cracked

⚠	Debris in the cylinder can cause the seals or the poppets to fail.

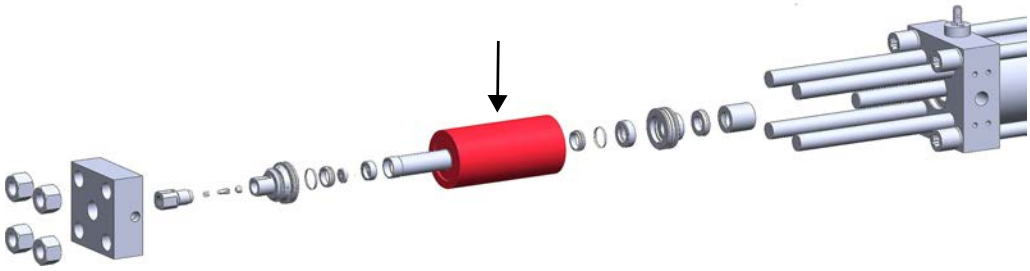

Parts, tools, and materials

Lapping paper, 12 micron

Clean towels

Nonstick scouring pad

Isopropyl alcohol

Emery cloth (no coarser than 120 grit)

1. Put the cylinder on a flat surface.
2. Examine the end of the cylinder. If the area around the bore is marked or pitted, remove the defects with emery cloth and then with a nonstick scouring pad.
3. Examine the edges of the cylinder bore. If the bore has rough edges or burrs, remove the defects with an emery cloth.
4. Cut the nonstick scouring pad in half. Put half of the pad in each end of the cylinder. Put 1 thumb in each end of the cylinder on top of the pad and push down. Push evenly on the pad while rolling the cylinder back and forth.

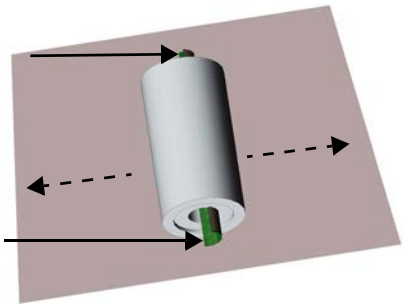

Nonstick scouring pad

5. Cut 2 pieces of lapping paper, each approximately 3 cm (1-1/4 inches) wide by 8 cm (3-1/4 inches) long.
6. Put the lapping paper into the ends of the cylinder with the abrasive side touching the cylinder.
7. Do the rolling procedure again with the lapping paper.
8. Clean the inner surfaces of the cylinder with a towel and isopropyl alcohol.

Assemble the intensifier

WARNING	Use 2 wrenches when loosening or tightening a high-pressure connection to prevent causing damage or premature failure. Do not tighten a fitting too much. The fitting can fail.
	Put the parts on a clean, dry surface.
	Before assembling high-pressure or hydraulic parts, clean the parts to remove grease and other contamination.

⚠	Examine parts that are being replaced to identify wear patterns or damage that can show other problems.
⚠	Clean each part with a towel and isopropyl alcohol. Examine all parts for deterioration, corrosion, or damage. Do not use soap, detergent, or solvents.
❗	Use clean hands when changing high-pressure parts.

Refer to Parts lists on page 137.

Repair the hydraulic center section

Repair the hydraulic center section every 12,000 hours.

The hydraulic center section includes the piston, the plungers, the hydraulic cylinder, the hydraulic end caps, the low-pressure seals, and the proximity switches.

Preventive maintenance on these parts requires special tools. Contact a Hypertherm Technical Service Associate for information and support regarding the installation, operation, maintenance, and repair of this equipment.

Install the indicator pin assembly

Replace the indicator pin springs every 3,000 hours.

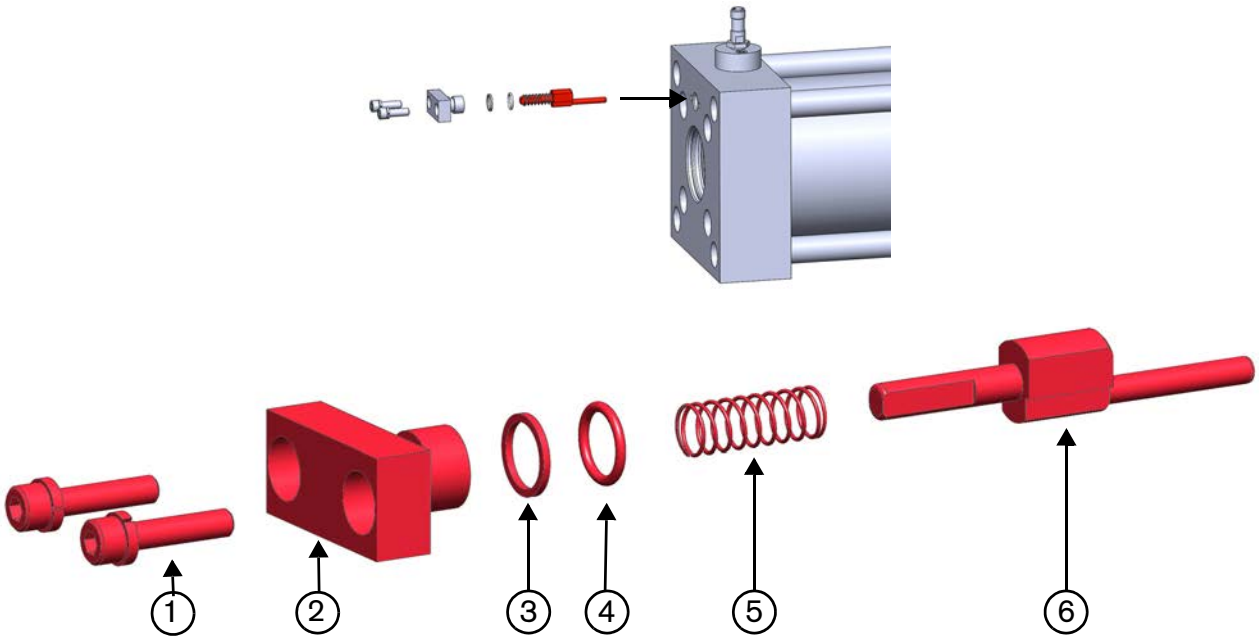

1 Cap screws and lock washers
2 Indicator pin cap
3 O-ring backup, -013
4 Indicator pin O-ring, -013
5 Indicator pin spring
6 Indicator pin

Parts, tools, and materials

Indicator pin

Indicator pin spring (included in 1-12084 DynaMAX 5-series standard Tool kit)

Antiseize bolt lubricant (white lithium grease)

Antiwear (AW) mineral oil or synthetic hydraulic fluid, ISO viscosity grade (VG) 32 or 46

Torque wrench

5/32-inch hex wrench or hex-bit socket

1. Put the indicator pin into the indicator pin hole in the hydraulic end cap. Turn the pin so that the offset post goes into the opening at the back of the hole.
2. Put the spring on the indicator pin.
3. Put the O-ring backup on the indicator pin cap.
4. Put a small quantity of hydraulic fluid on the O-ring.
5. Put the O-ring on the indicator pin cap.

6. Put the indicator pin cap into the hydraulic end cap.
7. Put antiseize bolt lubricant on the cap screws.
8. Put the lock washers on the cap screws. Torque the cap screws to 11 N·m (8 lbf·ft). Refer to Indicator pin cap screw on page 180

Install the seal housing assembly and the plunger bearing

Replace the plunger bearings:
- every 3,000 hours
- when replacing the high-pressure cylinder

Replace the seal housing assemblies every 6,000 hours.

CAUTION	Water can enter the hydraulic system if the weep holes in the dynamic seal backup or the seal housing are blocked. Make sure that there is no debris in the weep holes.

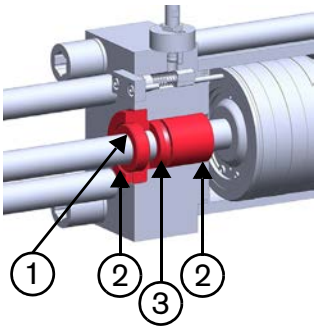

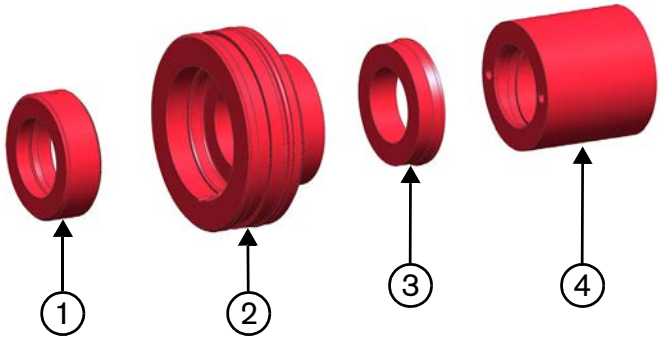

1 High-pressure seal backup (bronze)
2 Seal housing
3 Hydraulic rod seal, 1 inch
4 Plunger bearing

Parts, tools, and materials

DynaMAX premium high-pressure seal repair kit

Plunger bearing

Seal housing

Petroleum-based O-ring lubricant, 56 g (2 oz.)

Antiwear (AW) mineral oil or synthetic hydraulic fluid, ISO viscosity grade (VG) 32 or 46

1. Examine the seal housing and the high-pressure seal backup. Make sure that the weep holes and the inner grooves are clean.

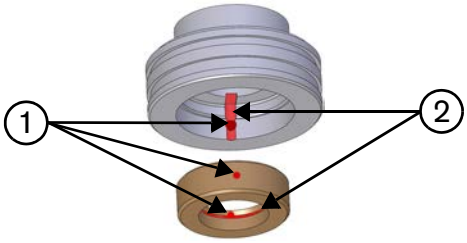

1 Weep holes

2 Grooves

2. Put O-ring lubricant on the backup ring and the seal housing O-ring.

3. Put the seal housing O-ring backup and the seal housing O-ring on the seal housing. Put the O-ring on the side nearer the narrow end of the seal housing.

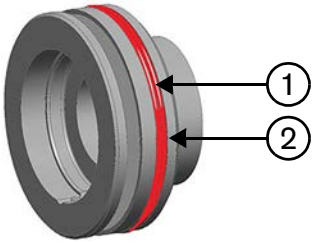

1 O-ring backup, -035

2 Seal housing O-ring, -035

i	The seal housing O-ring backup has a flat side and a concave side. Make sure the flat side of the O-ring backup faces the wide end of the seal housing. The O-ring fits into the concave groove on the O-ring backup.

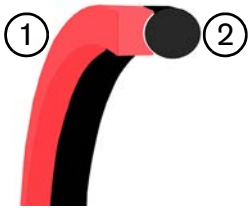

4. Put the plunger bearing on the plunger. Push the plunger bearing into the hydraulic end cap.

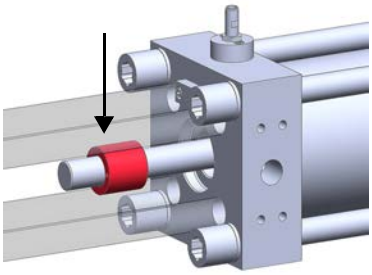

5. Put a small quantity of clean hydraulic fluid on the inner and the outer surfaces of the rod seal.
6. Put the rod seal onto the plunger with the wider side toward the hydraulic end cap.

i	Do not push the rod seal into the hydraulic end cap.

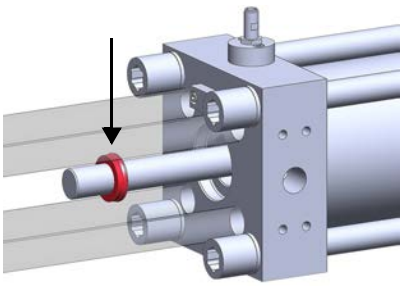

7. Put hydraulic fluid in the narrow end of the seal housing.
8. Put the seal housing on the plunger with the narrow end toward the hydraulic end cap.
9. Push the rod seal into the seal housing.
10. Turn the seal housing so that the weep hole faces down.
11. Push the seal housing tightly against the plunger bearing.
12. Turn the high-pressure seal backup so that 1 weep hole is in line with the seal housing weep hole.
13. Put the high-pressure seal backup on the plunger and push it against the seal housing.
14. Make sure that the bottom weep holes are aligned.

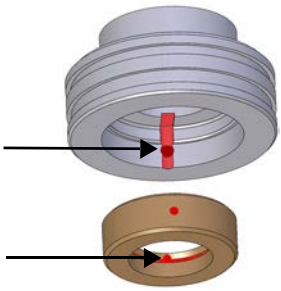

15. If the proximity switch was removed for this procedure, reinstall it.

Install the high-pressure hoops, the high-pressure water seals, the high-pressure cylinders, and the check valves

⚠	Do not put grease or lubricant on the check valve face or in the cylinder bore. These components are designed for dry contact.

Repair the high-pressure cylinders and the check valves every 500 hours.

Repair the high-pressure hoops and the high-pressure water seals every 500 hours.

Replace the check valves every 2,000 hours.

Replace the high-pressure cylinders:

- every 3,000 hours
- if the cylinder is chipped or cracked

Install a new plunger bearing when replacing the high-pressure cylinder.

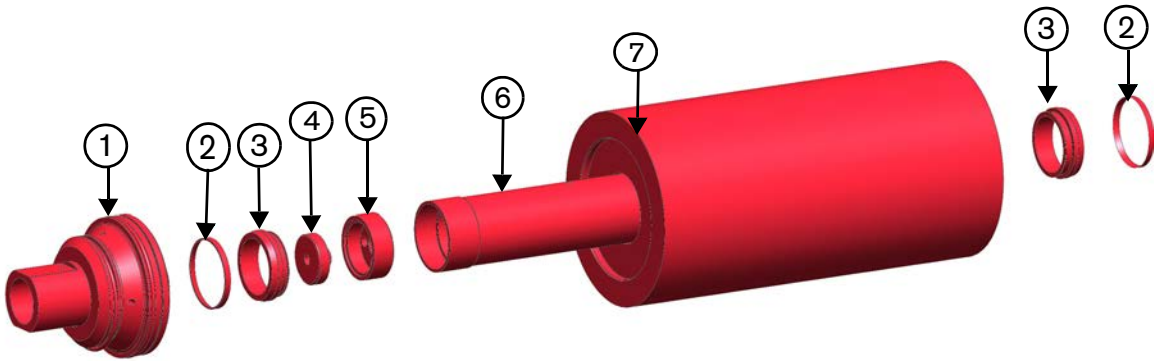

1 Check valve assembly
2 High-pressure hoop
3 High-pressure water seal
4 Low-pressure poppet
5 Low-pressure poppet basket
6 Spacer tube
7 High-pressure cylinder

Parts, tools, and materials

DynaMAX premium high-pressure seal repair kit.

DynaMAX poppet repair kit

Check valve assembly

Low-pressure poppet basket

Spacer tube

High-pressure cylinder

High-pressure antiseize lubricant such as Blue Goop or PURE Goop

Seal installation tools (Refer to 1-12084 DynaMAX 5-series standard Tool kit).

Rubber mallet

1. Put the seal installation spacer tool on a clean, dry surface.

2. Put the high-pressure cylinder over the spacer tool so that the tool fits in the cylinder bore.

3. Put the low-pressure poppet into the low-pressure poppet basket.

!	Keep the poppet and the poppet basket clean. Grease can cause the poppet to stick.

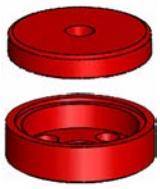

4. Make sure that the poppet moves easily.

5. Put the low-pressure poppet basket with the low-pressure poppet into the spacer tube.

6. Put the spacer tube into the high-pressure cylinder.

7. Put the seal installation locator tool on top of the cylinder.

8. Put the seal installation sleeve in the locator tool with the flat opening toward the cylinder.
9. The beveled opening faces up.

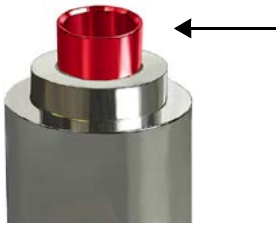

10. Put a small quantity of high-vacuum grease on the red O-ring.
11. Put the red O-ring into the groove on the high-pressure water seal.

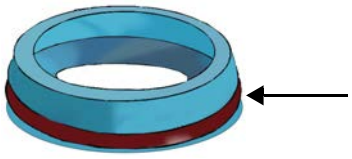

12. Put the high-pressure water seal into the insertion sleeve with the red O-ring toward the cylinder.

13. Put the push tool into the insertion sleeve with the stepped end up. Apply even pressure while holding the sleeve tightly against the cylinder.

14. Remove the push tool from the insertion sleeve.

15. Make sure that the seal is installed in the cylinder correctly.

16. Put the hoop into the insertion sleeve with the sharp edge toward the cylinder.

17. Put the push tool into the insertion sleeve with the stepped end up. Tap the push tool sleeve with a rubber mallet until the push tool touches the sleeve.

18. Hold the sleeve tightly in the cylinder while tapping the push tool.

19. Remove the seal insertion push tool, the sleeve, and the locator.

20. Make sure that the hoop edges are even with the surface of the cylinder. If the edges are not even with the surface of the cylinder, put the nonstepped end of the push tool on the hoop and tap the push tool with a rubber mallet.

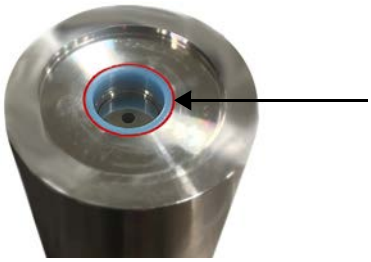

21. Put the end of the check valve into the seal. Tap on the small end of the check valve with a rubber mallet until it is touching the cylinder end.

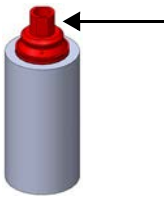

22. Turn the cylinder over so that the check valve is on the bottom. Put 1 hand under the bore at the bottom of the cylinder to catch the spacer tool and to prevent the spacer tube from sliding out.

23. Use the same procedure to install the second seal and the hoop in the high-pressure cylinder.

24. Put the cylinder and the check valve on to the plunger by pushing on the end of the check valve until the cylinder is touching the seal housing.

Install the high-pressure end caps

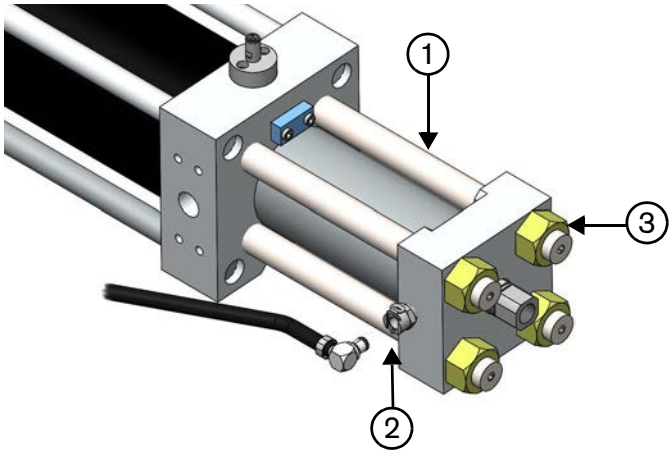

1 Stud

2 Low-pressure water fitting

3 High-pressure end cap nuts

Parts, tools, and materials

Antiseize bolt lubricant (white lithium grease)

High-pressure antiseize lubricant such as Blue Goop or PURE Goop

Torque wrench, 3/4-inch drive, 80 N·m to 400 N·m (60 lbf·ft to 300 lbf·ft)

(included in the 1-12084 DynaMAX 5-series standard Tool kit).

Square drive socket, 1-1/2 inch × 3/4 inch (included in the 1-12084 DynaMAX 5-series standard Tool kit).

Petroleum-based O-ring lubricant

1. Put O-ring lubricant on the check valve O-ring. Put the O-ring on the check valve.

i	The O-rings are installed on the larger outer diameter of the check valve to seal on the inner diameter of the high-pressure end cap.

2. Install the gasket in the groove in the high-pressure end cap. The cutout in the gasket directs fluid down into the drip tray.

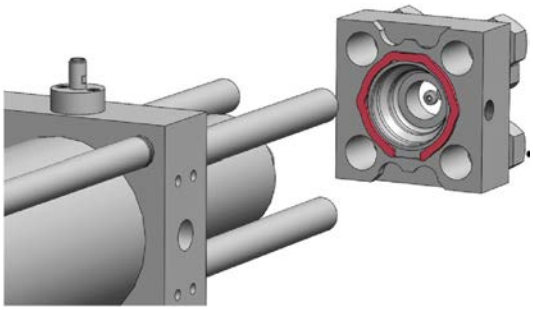

3. Put the high-pressure end cap onto the check valve and the studs with the water fitting pointed toward the attenuator.
4. Put antiseize bolt lubricant on the stud threads.
5. Tighten the nuts on the studs by hand.
6. Put the smooth side of the nut toward the high-pressure end cap.
7. Torque the end cap nuts to 375 N·m (275 lbf·ft). Refer to High-pressure end cap nut on page 180
8. Tighten each fastener in 68 N·m (50 lbf·ft) increments. Use a repeating cross pattern. Refer to Special fasteners on page 180

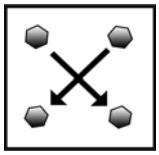

9. Connect the low-pressure water line.

10. Install the drip tray under the high-pressure end.

Install the output adapter and the bleed-down valve poppet assembly

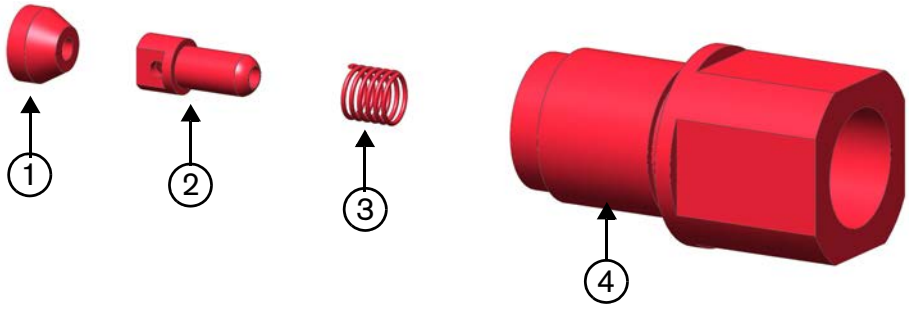

1 High-pressure poppet seat
2 High-pressure poppet
3 High-pressure poppet spring
4 Output adapter

Repair the high-pressure poppet assemblies every 1,000 hours.
Replace the output adapters every 6,000 hours.

Parts, tools, and materials

DynaMAX premium high-pressure seal repair kit.

DynaMAX poppet repair kit

Output adapter

High-pressure antiseize lubricant such as Blue Goop or PURE Goop.

1-inch crowfoot wrench or socket

13/16-inch open-ended wrench

Torque wrench

1. Use a cotton-tipped applicator to put high-pressure antiseize lubricant in the recess in the bottom of the check valve.

2. Use a cotton-tipped applicator to guide the high-pressure poppet seat into the check valve. The wide end of the high-pressure poppet seat faces toward the check valve.

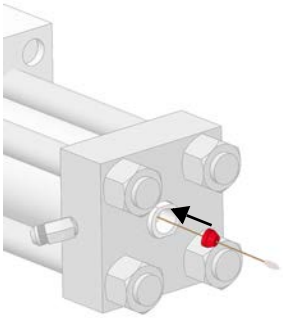

3. Push the high-pressure poppet seat into the high-pressure antiseize lubricant in the check valve.
4. Put high-pressure antiseize lubricant on the threads of the output adapter.

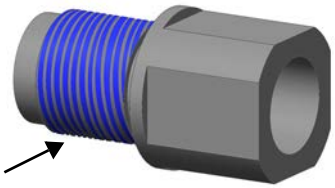

5. Put the high-pressure poppet spring and the high-pressure poppet in the output adapter.
6. Put the output adapter in the check valve and tighten it by hand.

CAUTION	Tightening the output adapter with the poppet in an incorrect position can cause damage. When the output adapter is correctly installed, the gap between the wide part of the output adapter and the check valve is 10 mm (3/8 inch) and no threads are visible. If the gap is too large or if threads are visible, make sure that the poppet parts have not moved.

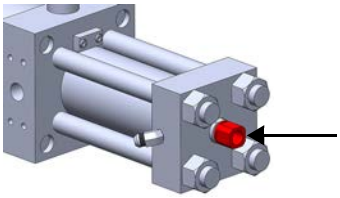

7. Torque the output adapter to 115 N·m (85 lbf·ft). Refer to Output adapter on page 185
8. Put high-pressure antiseize lubricant on the high-pressure connector threads.
9. Connect the high-pressure tubing.

	Make sure that some of the threads on the high-pressure tubing are visible at the fitting. Refer to Special fasteners on page 180.

10. Torque the high-pressure water fitting to 68 N·m (50 lbf·ft). Refer to High-pressure water fittings (gland nuts) on page 185

Bleed-down valve

Repair the bleed-down valve:

- Every 1,000 hours
- If water leaks from the **WASTE WATER OUT** connection or from the weep holes while the pump is operating

Replace the bleed-down valve every 3,000 hours.

Refer to 1-17434 Bleed-down valve repair kit on page 140.

WARNING	Do not tighten a fitting too much. The fitting can fail.
	Identify the source of a leak and correct the problem. Refer to Leaks on page 155. A leak can cause damage to the water fittings.
	Put the parts on a clean, dry surface.
	Examine parts that are being replaced to identify wear patterns or damage that can show other problems.
	Clean each part with a towel and isopropyl alcohol. Examine all parts for deterioration, corrosion, or damage. Do not use soap, detergent, or solvents.

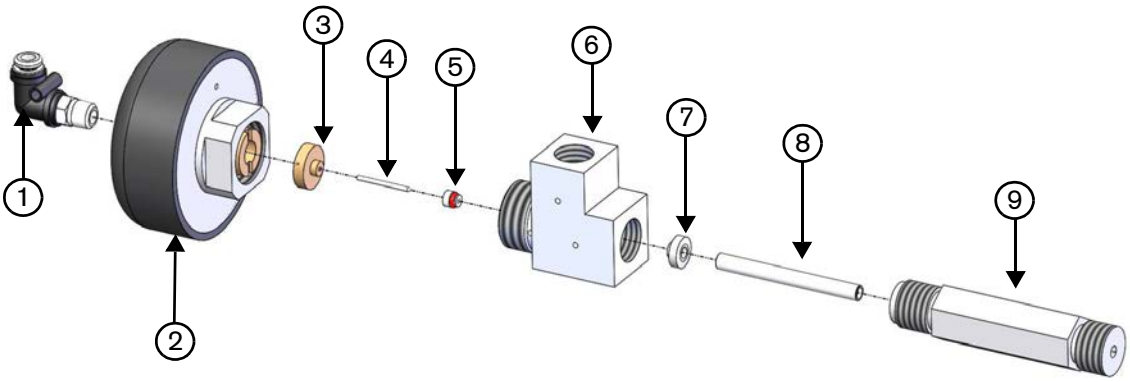

1 Air fitting
2 Actuator
3 Needle bushing
4 Needle
5 High-pressure valve seal
6 Bleed-down valve body
7 Bleed-down valve poppet seat
8 Air-actuated bleed-down valve flow reducer
9 Outlet adapter

Repair the bleed-down valve

Parts, tools, and materials

Bleed-down valve repair kit

3/4-inch open-ended wrench

5/8-inch open-ended wrench

13/16-inch open-ended wrench

1-inch open-ended wrench

1-1/8-inch open-ended wrench

3/4-inch open-ended crowfoot wrench or socket

Phillips screwdriver

Torque wrench

Clean towels

Isopropyl alcohol

High-pressure antiseize lubricant such as Blue Goop or Pure Goop

Wooden dowel

Recommended Materials

Vise

Do this when the pump is not operating.

Remove the bleed-down-valve from the pump

1. Turn the primary breaker disconnect lever on the electrical enclosure door to **OFF**.
2. Turn **OFF** the supply water to the pump. Make sure that the water pressure gauges show 0.0 bar (0 psi).
3. Turn **OFF** the compressed air source.
4. Turn **OFF** the electrical main (line disconnect switch). Use standard lock out-tag out procedures.
5. Disconnect the compressed air hose from the air fitting on top of the actuator.

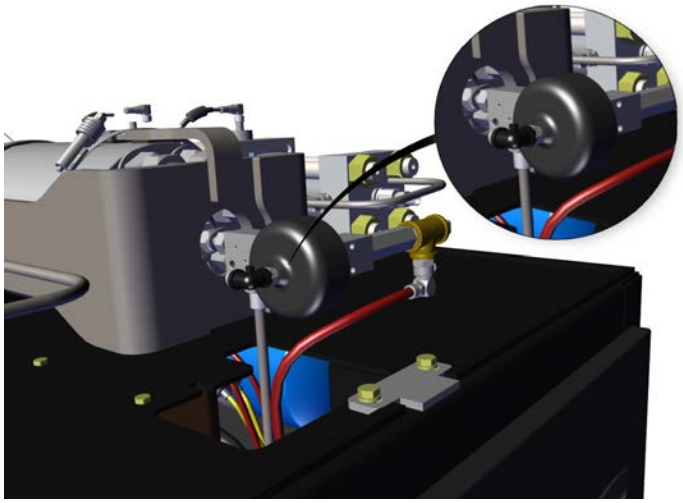

6. Disconnect the water drain tube from the bleed-down valve.

7. Use 13/16-inch open-ended wrench to loosen the high-pressure fittings attached to the bleed-down valve body.

8. Remove the bleed-down valve assembly from the pump.

9. Remove the outlet adapter from the valve body.

Assemble the bleed-down valve

1. Put high-pressure antiseize lubricant on the seal.

2. Put the flow reducer into the outlet adapter.

3. Put the seat into the outlet adapter.

4. Install the outlet adapter in the bleed-down valve body. Torque the adapter to 95 N·m (70 lbf·ft). Refer to Steel JIC 37° on page 183

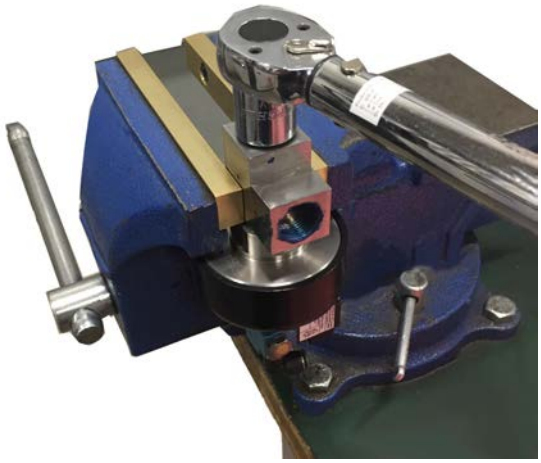

5. Put the needle through the needle guide and the valve seal. Make sure that the point of the needle faces the seal.

6. Put high-vacuum grease on the red O-ring on the valve seal. Make sure that the red O-ring on the valve seal faces away from the needle.

7. Put the needle-and-seal assembly into the valve body until the needle guide is even with the top of the bore.

8. Install the actuator on the valve body. Tighten the actuator by hand.

Install the bleed-down valve

1. Tighten the gland nut on the high-pressure collar at the high-pressure fitting of the valve.

   Refer to Fittings on page 182 for torque values.

2. Connect the water drain tube to the bleed-down valve.

3. Connect the compressed air hose to the fitting on top of the actuator.

4. Turn **ON** the water to the pump.
5. Monitor for leaks.

Start the pump after maintenance

DANGER	Before removing a lock-out tag-out device: ● Obey the employer's energy-control procedure. ● Examine machines and parts to make sure that they are operational. ● Make sure that all personnel are safely away from machines. After removing energy-isolation devices, make sure that all personnel in the area of the equipment know that the devices are removed and that the machine is being energized.
WARNING	A turning motor shaft can be dangerous. Close all doors and replace all covers, including access covers.
WARNING	Do not try to repair a leak with pressure in the system.
WARNING	Remove all tools, towels, and rags from the work area before starting the equipment.
CAUTION	Make sure that all fittings are tight after doing maintenance on or repairs to this equipment.
	Identify the source of a leak and correct the problem. Refer to Leaks on page 155. A leak can cause damage to the water fittings.

Start the pump normally if maintenance is done on the pump was limited to:	**Use the Postmaintenance start procedure if maintenance or repairs have been done on:**
▪ Replacing the water filter. ▪ Replacing the hydraulic filter element. ▪ Replacing the hydraulic fluid. ▪ Repairing or replacing the bleed-down valve. ▪ Working on the electrical system. Refer to Start the pump on page 54 for instructions	▪ The high-pressure water system. ▪ Intensifier components. ▪ The primary motor.

1. Turn **ON** the electrical breaker.
2. Turn **ON** the water to the pump.
3. Monitor for leaks.
4. Turn **ON** the compressed air supply.

5. Turn **ON** the electrical main.
6. Turn the primary breaker disconnect lever on the electrical enclosure door to **ON**.
7. The operator interface screen is on when the pump is energized.
8. Make sure that the **LOCAL/REMOTE** key switch on the operation panel is set to **LOCAL**. Refer to Operation panel on page 48 for information.
   a. Push the **CONTROLS ON** button to turn on the control circuit in the pump.
   b. The pump can not be turned on until the control circuit is on.
9. Turn **ON** the pump in cooling mode.
10. The post-maintenance start program operates. Refer to Postmaintenance start procedure on page 131.
11. Monitor for leaks.

Operator interface: Maintenance screens

The maintenance screens on the operator interface let the user log and track all maintenance performed on the pump and the intensifier.

i	Not all screens are used when doing maintenance on the pump.
i	Touch the current screen symbol to go back 1 screen.

To use the maintenance screens, touch a symbol with a border around it. This usually opens another screen.

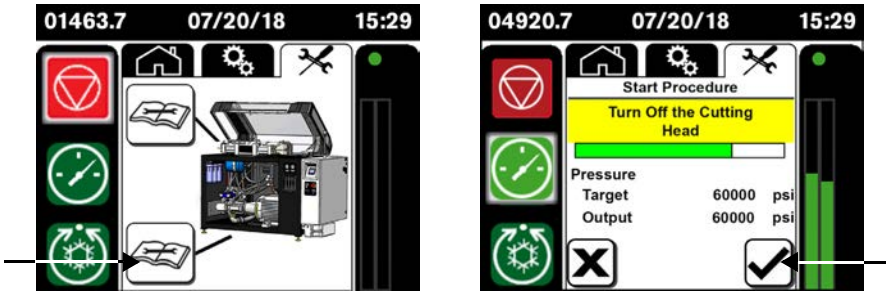

A field with no border shows that the item is informational.

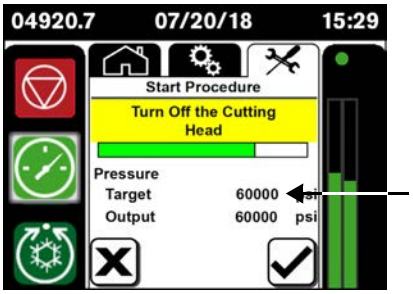

Primary maintenance screen

On the operator interface, touch the maintenance symbol to open the primary maintenance screen.

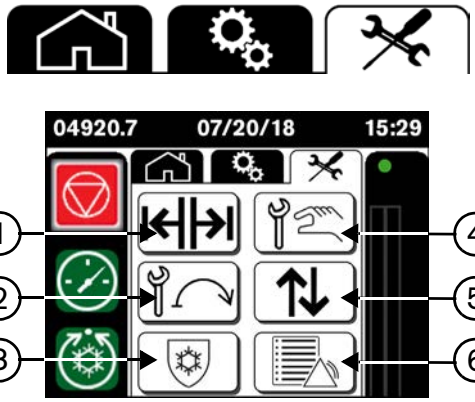

1 Move the plunger
2 Start the pump after maintenance
3 Prepare for storage
4 Record maintenance
5 Inputs and outputs
6 Alarm log

Move the plunger

Touch this symbol to open the ***Move the Plunger*** screen.

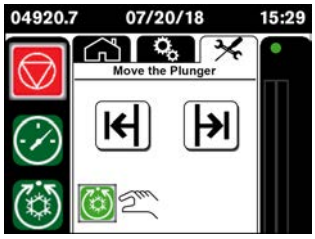

Touch a symbol to shift the intensifier plunger to the left or to the right.

The unit must be in cooling mode. The cooling symbol with a hand flashes as a reminder.

Start the pump after maintenance

Touch this symbol to open the ***Start Procedure*** screen. Refer to page 126 for instructions.

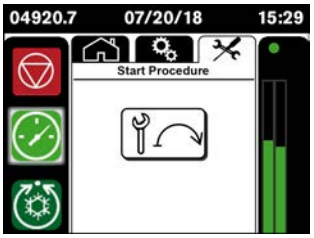

Prepare for storage

Touch this symbol to open the ***Prepare for Storage*** screen. Refer to Prepare for storage on page 134 for instructions.

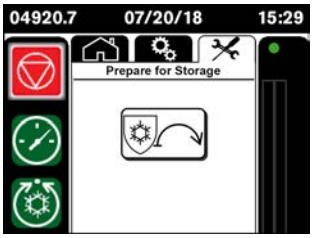

Record maintenance

1. Touch this symbol to open the ***Maintenance Selection*** screen.

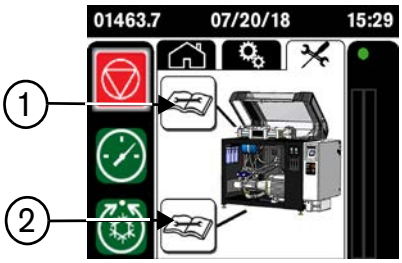

1 Intensifier

2 Pump components

2. To open the ***Intensifier Maintenance*** screen, touch the repair symbol on the top.

   To open the ***Pump Components*** screen, touch the repair symbol on the bottom. Go to *step 7* on page 129.

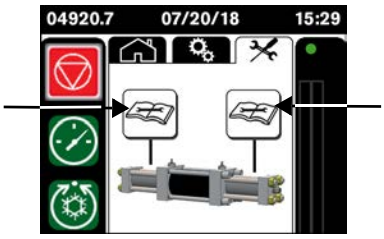

3. Touch the repair symbol for the right or the left end of the intensifier.

   There are 3 ***Intensifier Components*** screens. Touch an arrow symbol at the bottom of a screen to move between the screens.

4. Touch the symbol on the screen for each component that was replaced.

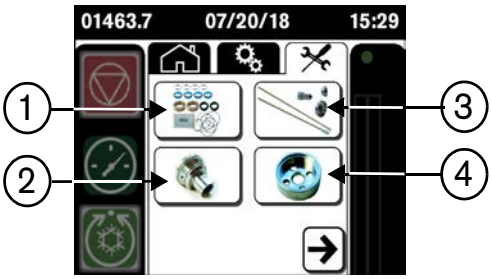

1 DynaMAX premium high-pressure seal repair kit (500 hours)

2 Check valve assembly (1,500 hours)

3 1-12084 DynaMAX 5-series standard Tool kit (1,000 hours)

4 Low-pressure poppet basket (1,500 hours)

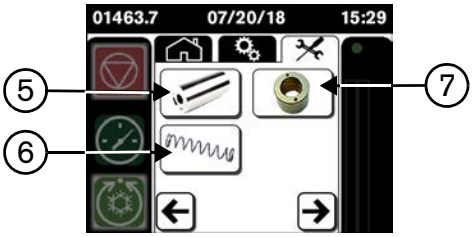

5 High-pressure cylinder (3,000 hours)

6 Indicator pin spring (3,000 hours)

7 Plunger bearing (3,000 hours)

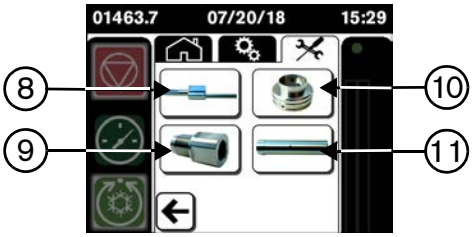

8 Indicator pin (6,000 hours)

9 Output adapter (6,000 hours)

10 Seal housing (6,000 hours)

11 Spacer tube (12,000 hours)

After a symbol is selected, the ***Maintenance Reason*** screen opens.

5. Touch the applicable symbol on the screen to record the reason that the part was replaced. This information is saved as a .CSV file on the SD card.

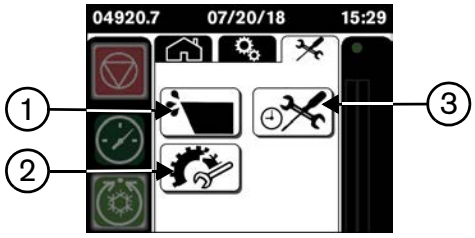

1 Leak
2 Worn or broken part
3 Scheduled preventive maintenance

6. If maintenance is done on both ends of the intensifier, do these steps again for the other high-pressure end.
7. Touch the bottom repair symbol on the ***Record Maintenance*** screen to open the ***Pump Components*** screen.
8. Touch the symbol on the screen for the part that was replaced.

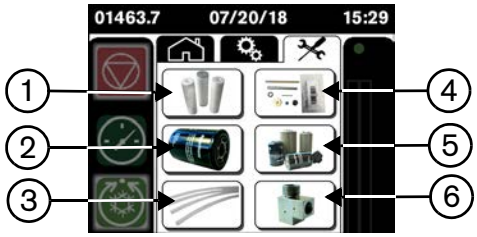

1 Water filter cartridges (1,000 hours)
(0.22 micron)
(1.0 micron)
(10 micron)
2 Hydraulic filter (1,500 hours)
3 Seal Maintenance Indicator tubes replacement kit (2,000 hours)
4 Bleed-down valve repair kit (1,000 hours)
5 Hydraulic fluid service kit (3,000 hours)
6 Bleed-down valve body (3,000 hours)

After a symbol is selected, the ***Maintenance Reason*** screen opens.

9. Touch the applicable symbol on the screen to record the reason that the part was replaced. This information is saved as a .CSV file on the SD card.

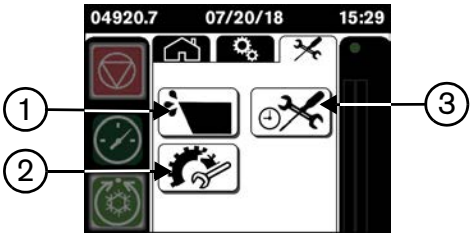

1 Leak
2 Worn or broken part
3 Scheduled preventive maintenance

Inputs and outputs

Touch this symbol to open the screen that shows inputs and outputs for the controller.

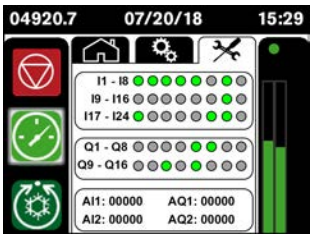

Refer to Controller errors on page 171 for detailed description.

Alarm log

Touch this symbol to open the ***Alarm Log*** screen.

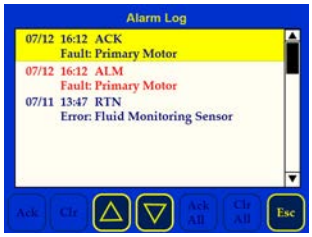

Postmaintenance start procedure

Touch the X symbol to stop the sequence and turn **OFF** the pump.

i	Touch the ☒ symbol to stop the procedure and turn **OFF** the pump.

This automatic start procedure is designed to increase the water pressure gradually and break in the pump after maintenance. A consistent, smooth start procedure after maintenance can improve high-pressure seal life. The procedure takes approximately 6 minutes.

1. Turn **ON** the supply water to the pump.
2. Turn **ON** the compressed air source.
3. Turn **ON** the electrical main (line disconnect switch).
4. Turn **ON** the primary breaker disconnect lever on the electrical enclosure door to **ON**.
5. On the operator panel:
   a. Make sure the emergency stop button is not engaged. If the button is pushed in, turn the button clockwise until it releases.
   b. Make sure the **LOCAL-REMOTE** key switch is set to **LOCAL** .
   c. Push the **CONTROL ON** button.
6. On the operator interface, touch the maintenance symbol to open the primary maintenance screen.

7. Touch the symbol to open the ***Start Procedure*** screen.

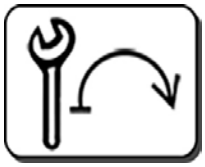

8. Touch the symbol on the screen to start the procedure.

i	While to procedure continues, examine the pump for high-pressure water leaks and hydraulic fluid leaks. Monitor these areas. • Hydraulic connections • Valves • Intensifier bridge and button deck

The operator interface shows the start procedure stage that the pump is in, a progress, bar, and the target and output pressures.

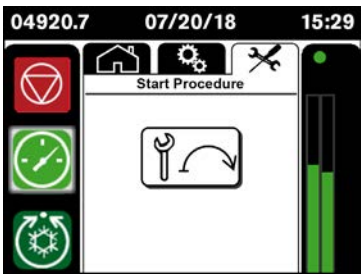	**Stage 1: Supply water pressure** Touch the symbol on the ***Start Procedure*** screen. ■ The beacon light flashes green at 1-second intervals during the start procedure. ■ The primary motor starts. ■ If the system has a boost pump, it turns on. ■ The hydraulic pump operates at minimum pressure. ■ The controller monitors the supply water pressure until the pressure gets to the water manifold pressure setpoint. The setpoint is based on the pump model.
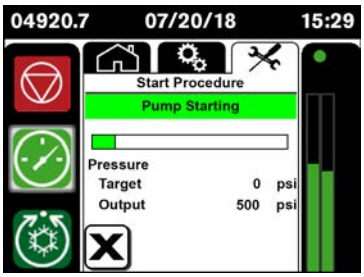	**Stage 2: Remove air from the system** ■ The intensifier starts stroking. ■ ***Pump Starting*** flashes on the screen at 1-second intervals. ■ The intensifier pushes water through the system and pushes air out through the bleed-down valve. ■ Supply water causes the water pressure in the system to increase. ■ The ***Supply Water Start Procedure*** timer expires. ■ The bleed-down valve is open.
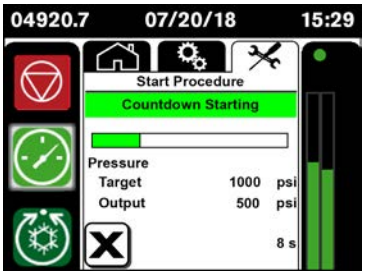	**Stage 3: Charge the system** ■ The bleed-down valve closes. ■ ***Countdown Starting*** flashes on the screen at 1-second intervals. ■ The intensifier strokes to increase the water pressure in the system.
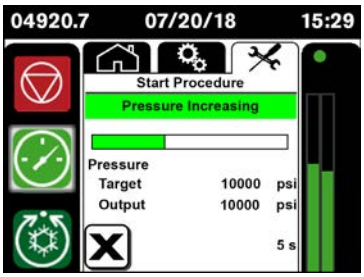	**Stage 4: Pressure Increasing** ■ The target pressure increases to 690 bar (10,000 psi). ■ ***Pressure Increasing*** flashes on the screen at 1-second intervals. ■ The intensifier strokes to increase the water pressure in the system.

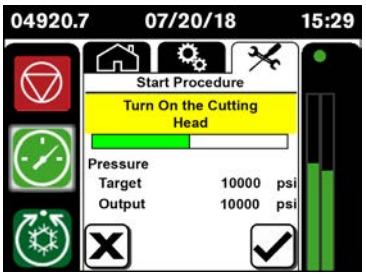	**Stage 5: Turn On the Cutting Head** ***Turn On the Cutting Head*** flashes on the screen at 1-second intervals. **1.** Move the cutting head to a safe location on the table. **2.** Turn **ON** the cutting head. **3.** Touch the ✓ symbol.
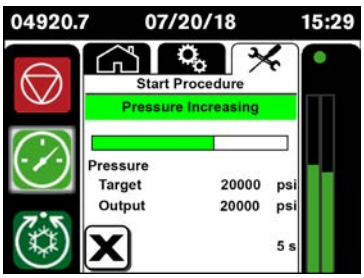	**Stage 6: Pressure Increasing** ***Pressure Increasing*** flashes on the screen at 1-second intervals. ■ The intensifier strokes to increase the water pressure in the system. ■ The target pressure increases to 1,380 bar (20,000 psi). ■ The target pressure increases to 2,070 bar (30,000 psi). ■ The target pressure increases to 2,760 bar (40,000 psi). ■ The target pressure increases to 3,450 bar (50,000 psi). ■ The target pressure increases to 4,140 bar (60,000 psi).
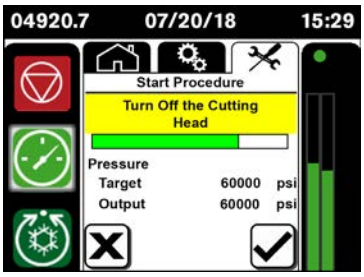	**Stage 7: Close the Cutting Head** ***Turn Off the Cutting Head*** flashes on the PLC screen at 1-second intervals. **1.** Turn **OFF** the cutting head. **2.** Touch the ✓ symbol.
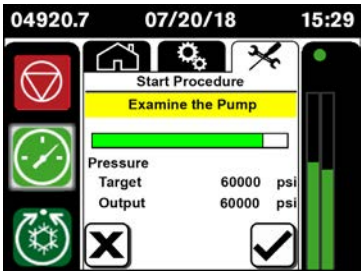	**Stage 8: Examine the Pump** ***Examine the Pump*** flashes on the screen at 1second intervals. **1.** Examine the pump for loose fittings or leaks. **2.** Touch the ✓ symbol. ■ The main motor turns off. ■ The primary operation screen opens.

The pump is ready for operation.

Prepare for storage

CAUTION	High-pressure water can cause eye injuries. Wear approved eye protection when operating or doing work near this equipment. Do not stand over components such as tubes or valves while drying the system.
	Do not dry the cooling circuit of an air-cooled system.

1. Remove the water filters from the filter canisters. Refer to Low-pressure water on page 91.
2. Make sure that the filter canisters are empty.
3. Install the water filter canisters without the filters.
4. Disconnect the compressed air supply hose from the utility panel and connect it to the **CUTTING WATER IN** connection.

   The **CUTTING WATER IN** connection is 1/2-inch female. An adapter (not included) is necessary.
5. Disconnect the **WASTE WATER OUT** hose from the utility panel.
6. On the operator interface, touch the symbol on the ***Prepare for Storage*** screen. Refer to Prepare for storage on page 127.

   The cutting water and the cooling water supply valves open.
7. Turn **ON** the compressed air supply for a minimum of 5 minutes to dry the system.
8. Turn **OFF** the compressed air supply.
9. Disconnect the compressed air supply hose from the **CUTTING WATER IN** connection.
10. Water can collect in the filter canisters when the system is cleared. Make sure that the filter canisters are empty.
11. Install the water filter canisters with the filters.
12. Drain hydraulic fluid from the hoses and the heat exchanger.
13. Do this procedure for a water-cooled system.
    a. Connect the compressed air supply hose to the **COOLING IN** connection.

       The **COOLING IN** connection is 1-inch NPT female. An adapter (not included) is necessary.
    b. Disconnect the **COOLING OUT** hose from the utility panel.
    c. On the operator interface, touch the symbol on the ***Prepare for Storage*** screen.

       The cutting water and the cooling water supply valves open.
    d. Turn **ON** the compressed air supply for at least 2 minutes to dry the system.

e. Disconnect the compressed air supply hose from the utility panel.

f. On the operator interface, touch the X symbol on the screen to close the water valves.

14. Install the fitting caps and the plugs on the utility panel.

Recycling and end of product life

At the end of the life of the product or its parts, recycle or discard materials and parts. Use an environmentally satisfactory method and in accordance with local regulations. If the product contains substances that could cause damage to the environment, remove and dispose of them in accordance with current local regulations. This includes liquids such as hydraulic fluid.

Make sure that dangerous substances are disposed of safely and that the correct personal protective equipment is used. The safety specifications must be in accordance with the current local regulations at all times.

5 Parts lists

Genuine Hypertherm parts are the factory-recommended replacement parts for this pump. It is possible that the Hypertherm warranty will not cover damage caused by nongenuine Hypertherm parts.

To order parts, contact the original equipment manufacturer (OEM).

Tools

1-12084 DynaMAX 5-series standard Tool kit

Part number	Description	Quantity
1-12091	Torque wrench, 3/4-inch drive, 80 N·m to 400 N·m (60 lbf·ft to 300 lbf·ft)	1
1-17490	Breaker bar, 40-inch	1
1-18038	White lithium grease, 44.3 ml (1.5 fluid oz)	1
1-13537	PURE Goop halocarbon-based antiseize lubricant, 28 g (1 oz)	1
1-11111	Blue Goop oil-based antiseize lubricant, 57 g (2 oz)	1
1-13969	O-ring lubricant, petroleum-based, 113 g (4 oz.)	1
1-13972	Wrench, water filter	1
1-12020	Square-drive socket, deep, 3/4 inch × 3/4 inch	1
1-12019	Hex driver, 3/4 inch × 13-1/2 inch	1
1-12021	12-point socket, 3/4-inch square drive, 1-1/2-inch	1
1-13281	Lapping block, granite	1
1-11210-12	Lapping paper, 12 micron, 1 sheet	10
1-17522	Screw, stainless steel, 10-32 (to remove the plunger bearing)	2
1-11558	Tool, seal installation, locator	1
1-11811	Tool, seal installation, sleeve	1
1-11812	Tool, seal installation, push tool	1
1-12932	Tool, seal installation, spacer	1
1-11985	Tool, seal housing removal	1
1-17520	Cleaning brush, SMI tube	3

These tools are shipped with the pump. The tool case contains all of the above items except:

- The torque wrench has a separate case.
- The granite lapping block is shipped in a wooden box.
- The breaker bar is shipped in a bag.

Maintenance and repair kits

1-17482 DynaMAX 5-series standard spare parts kit

Part number	Description	Quantity
1-17437	Repair kit, high-pressure seal, premium	2
1-15568	Repair kit, poppet, DynaMAX S-series and D-series	2
1-17434	Repair kit, bleed-down valve	1
1-15470	Water filter cartridge, 0.22 micron, 10 inch	1
1-11106	Water filter cartridge, 1.0 micron, 10 inch	1
1-11107	Water filter cartridge, 10 micron, 10 inch	1
1-16025	Filter, hydraulic	1
1-15564	Cotton-tipped applicator	2
1-11669	Spring, indicator pin	2
1-11679-013	O-ring, indicator pin, -013	2
1-11680-013	O-ring backup, -013	2

1-17437 DynaMAX 5-series premium high-pressure seal repair kit

Description	Quantity
Hoop, high-pressure, 1 inch	4
Water seal, high-pressure, 1 inch	4
1-11136 High-vacuum grease, 150 g (5.3 oz.)	1
Seal backup, high pressure, bronze	2
Hydraulic rod seal, 1 inch	2
O-ring, check valve and seal housing, -035	4
O-ring, check valve, -031	2
O-ring backup, -035	2
O-ring, -011	2
Gasket, high-pressure end cap	2

1-15568 DynaMAX 5-series poppet repair kit

Description	Quantity
Poppet, high pressure	2
Poppet spring, high pressure	2
Poppet seat, bleed-down valve	2
Poppet, low pressure	2
Cotton-tipped applicator	2

1-17434 Bleed-down valve repair kit

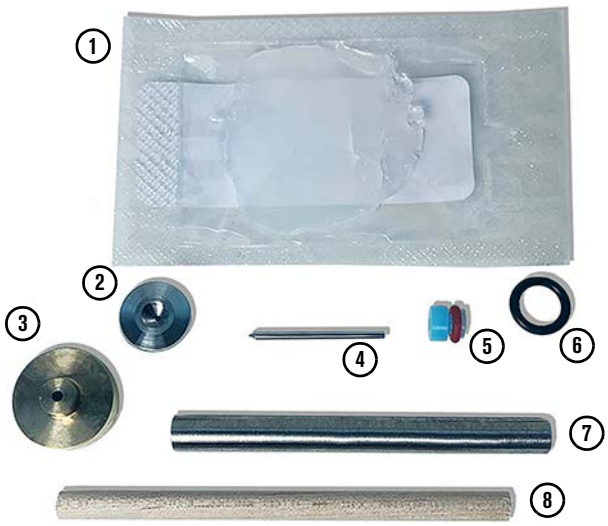

	Description	Quantity
1	High-vacuum grease, 5 g (0.2 oz)	1
2	Poppet seat, bleed-down valve	1
3	Valve seal, high-pressure	1
4	Needle, bleed-down valve	1
5	Needle guide, bleed-down valve	1
6	O-ring, -011	1
7	Flow reducer insert, bleed-down valve, air actuated	1
8	Dowel, wooden	1

1-17473 Hydraulic fluid replacement kit

Description	Quantity
Suction strainer, 2-1/2 inch	1
Suction strainer, 1-1/2 inch	1
Cap, filler-breather	1
Washer, flat, 5/8-inch (crush washer for hydraulic tank access cover)	1
Gasket, hydraulic tank cover	1
Filter, hydraulic	2

Optional equipment

Part number	Description
1-16968	Air-cooled system kit, 230V, HyPrecision P-50/P-50S
1-16957	Air-cooled system kit, 400 V/460 V, DynaMAX 550P
1-16958	Air-cooled system kit, 400 V/460 V, HyPrecision P-60/P-75S
1-17310	Electrical interlock kit, DynaMAX 550P/560P/575P
1-17293	Electrical interlock bracket, DynaMAX 550P/560P/575P
1-15578	Plumbing kit, external, pump mounted
1-15630	Tube, external plumbing kit, L-shape
1-WJN6601800	Tube, external plumbing kit, straight, 18 inch
1-17407	Key, interlock override

Replacement parts

Top cover

Part number	Description
1-17304	Top cover, DynaMAX 550P/560P/575P

Fittings

Part number	Description
1-13157-60-4	Collar, high pressure, 1/4 inch
1-13157-60-6	Collar, high pressure, 3/8 inch
1-13158-60-4	Gland nut, high pressure, 1/4 inch
1-13158-60-6	Gland nut, high pressure, 3/8 inch
1-13495	Antivibration fitting assembly, high pressure, 1/4 inch
1-14266	Antivibration fitting assembly, high pressure, 3/8 inch

Lubricants

Part number	Description
1-11111	Blue Goop oil-based antiseize lubricant, 57 g (2 oz)
1-13537	PURE Goop halocarbon-based antiseize lubricant, 28 g (1 oz)
1-13969	O-ring lubricant, petroleum-based, 113 g (4 oz.)
1-13186	Antiseize bolt lubricant (white lithium grease), 411 g (14.5 oz.)

Electrical system

Part number	Description
1-11670	Proximity switch
1-17355	Memory card, SDHC MicroSD, 32GB

Hydraulic system

Part number	Description
1-11733	Shift valve and pilot assembly, 24 VDC
1-17348	Transducer, hydraulic
1-17347	Valve and coil, proportional cartridge
1-17349	Relief valve, hydraulic high-pressure, preset
1-12617	Switch, temperature and fluid level
1-11964	Return diffuser, 2 inch
1-16435	O-ring kit, shift valve
1-18054	Service kit, gear pump, DynaMAX 550P/560P/575P
1-18042	Service kit, hydraulic pump, DynaMAX 550P
1-18043	Service kit, hydraulic pump, DynaMAX 560P/575P
1-18046	Service kit, hydraulic shaft seal, DynaMAX 550P
1-18047	Service kit, hydraulic shaft seal, DynaMAX 560P/575P
1-18050	Service kit, hydraulic O-rings, DynaMAX 550P
1-18051	Service kit, hydraulic O-rings, DynaMAX 560P/575P
1-18052	Service kit, compensator

Low-pressure water system

Part number	Description
1-11829	Canister, water filter
1-15470	Water filter cartridge, 0.22 micron, 10 inch
1-11106	Water filter cartridge, 1.0 micron, 10 inch
1-11107	Water filter cartridge, 10 micron, 10 inch
1-12614	Solenoid valve, cooling, 1/2-inch NPT, 24 VDC, brass
1-17361	Solenoid valve, water manifold, low-pressure water drain
1-17362	Solenoid valve, water manifold, supply cutting water
1-17337	Water manifold assembly
1-17359	Relief valve, water manifold
1-17493	Replacement kit, water manifold tubes
1-11835	Tank, water accumulator
1-17385	Container, dirty water
1-17076	Seal Maintenance Indicator™ (SMI) assembly
1-16329	Drip tray, SMI
1-17483	Replacement kit, SMI tubes, DynaMAX 550P/560P/575P
1-17360	Transducer, water manifold
1-17496	Replacement kit, low-pressure tubes and fittings
1-17488	Replacement kit, cooling tubes
1-17435	Replacement kit, inlet water tubes, intensifier
1-17498	Tube, replacement, bleed-down valve
1-17487	Fittings kit, push-to-connect
1-12056	Motor, boost pump, 1/2 hp
1-12057	Boost pump kit, 100 gallons per hour, DynaMAX 550P/560P/575P
1-19168	Boost pump assembly, wet end
1-11832	Gauge, low-pressure water
1-13897	Meter, TDS

High-pressure water system

Part number	Description
1-11501	Intensifier, DynaMAX 5-series
1-14688	End cover, high-pressure tubing sheath, 1/4 inch
1-14687	End cover, high-pressure tubing sheath, 3/8 inch
1-12579	High-pressure tubing sheath, 1/4 inch
1-12580	High-pressure tubing sheath, 3/8 inch
1-13162-60-6F9M	Inlet adapter, 9/16-inch male × 3/8-inch female
1-12280	Attenuator assembly, 1 liter
1-11595	Attenuator assembly, 2 liter
1-17340	Bleed-down valve assembly, air actuated
1-14141	Bleed-down valve body
1-13949	Solenoid, air, bleed-down valve
1-19171	Replacement kit, air tube, bleed-down valve, 1/4 inch
1-11518	Indicator pin
1-11519	Cap, indicator pin
1-11798	Support ring, split

Intensifier high-pressure ends

Part number	Description
1-11530	Output adapter
1-11523	Check valve assembly
1-11521	Spacer tube
1-11522	Cylinder, high pressure
1-11609	Seal housing
1-11520	Poppet basket, low pressure
1-11608	Plunger bearing

6 Troubleshooting

Safety

WARNING	**Read and understand all of the safety guidelines in this manual.** Refer to Safety on page 19 before operating, doing maintenance on, repairing, and installing the pump.
	Keep the work area clean and dry. Clean fluid spills immediately. Use a pan or a tray below areas where water or hydraulic fluid can spill during maintenance or repair procedures.
	Obey local protocols for recycling or disposal of parts, materials, and fluids. National and local environmental rules can apply to disposal. Refer to Recycling and end of product life on page 135.
	Coordinate maintenance and repairs with facility and safety staff.

General

ⓘ	If the problem is not found in this section, contact a Hypertherm Technical Service Associate for information and support.
ⓘ	Keep accurate maintenance records. Records can help with predicting and preventing maintenance problems.
ⓘ	Use SAE (US standard) tools for most procedures.

Normal status

Pump starting

Refer to Start the pump on page 54 for information about the start sequence.

Operator interface	Beacon light	Intensifier	Primary motor
Primary operation screen with the start sequence progress bar	Green, flashing	Engaged	On

Pump on

Operator interface	Beacon light	Intensifier	Primary motor
Primary operation screen	Green, not flashing	Engaged	On

Alarms

The controller monitors the pump while the pump is operating. When the controller senses a problem that is likely to cause damage to the equipment, the operator interface shows the ***Alarms*** screen. and the beacon light flashes.

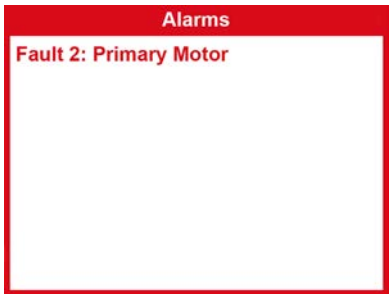

Types of alarms

	Beacon light	Intensifier	Primary motor	Cause of alarm
Warning	Amber, flashing	Engaged	On	The controller senses a condition that can cause a problem or a failure.
Fault 1	Red, flashing	Off	On, pump is in cooling mode	The controller senses a condition that will cause a problem or a failure.
Fault 2	Red, flashing	Off	Off	The controller senses a failure condition.
Fault 3	Red, flashing	Engaged	On	The Seal Maintenance Indicator (SMI) senses a seal failure condition.

To acknowledge an alarm, touch the screen. The ***Alarm Log*** screen opens.

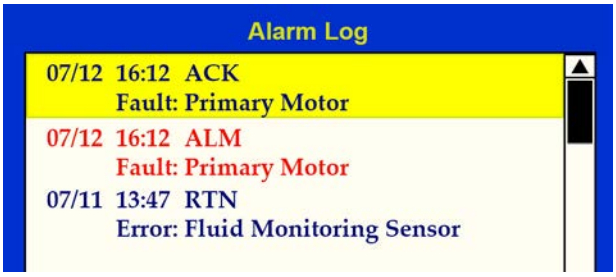

Touch ***Ack*** (acknowledge) or ***Ack All*** (acknowledge all) on the screen.

The beacon light stops flashing and the alarm screen closes.

Warnings

Alarm	Cause	Solution
Warning: Battery Error	The controller battery is not operating correctly.	Contact a Hypertherm Technical Service Associate for information and support.
Warning: Boost Motor **Warning: Fan Motor**	The boost motor or the fan motor did not start because the thermal overload relay has tripped.	Reset the relay. ▪ Find the thermal overload relay on the motor starter. ▪ Turn the knob clockwise to the **ON** position (**I**). ▪ Release the knob. It snaps counterclockwise to the **OFF** position (**O**). ▪ Turn the knob clockwise to the **ON** position (**I**) again.
 On	 Tripped	 Off
Warning: Too Many Motor Starts in 15 Minutes	Starting and stopping the motor rapidly can cause damage to the motor.	Wait longer between stopping and starting the motor.
Warning: Start Procedure Hydraulics **Warning: Start Procedure Ramp to Pierce Pressure** **Warning: Start Procedure Ramp to Cut Pressure**	An error occurred during the start sequence. ▪ The cutting head is on. ▪ The bleed-down valve is leaking. ▪ The bleed-down valve is not receiving air. ▪ The Hydraulics timer setting is too short.	▪ Make sure that the cutting head is off. ▪ Repair or replace the bleed-down valve. ▪ Make sure that the compressed air supply is on. ▪ Adjust the timer on the ***Start-procedure Timers*** screen.
Warning: Hydraulic Fluid >55C	The hydraulic fluid is too hot.	Refer to Hydraulic fluid on page 165.
Warning: Left Dynamic Seal **Warning: Right Dynamic Seal** **Warning: Left Static Seal** **Warning: Right Static Seal**	The SMI senses that the high-pressure seal life remaining is between 8 hours and 50 hours.	Replace the seal.
Warning: Empty the Dirty Water Container	The dirty water container is full.	Empty the container.

Alarm	Cause	Solution
Warning: Fluid Monitoring is Disconnected	The SMI is not plugged in.	Make sure that the SMI cable harness is not damaged and that the connections are not loose. The cable harness connects to the junction box (shown) and to the back of the SMI.
	The SMI is damaged.	Replace the SMI. Contact a Hypertherm Technical Service Associate for information and support.
Warning: Fluid Monitoring Sensor Error	A tube is dirty.	▪ Clean the tubes. Refer to Clean the Seal Maintenance Indicator tubes on page 86. ▪ Replace the tubes.
	An object is blocking the optical sensor.	Remove the object.
	An optical sensor is damaged.	Replace the SMI. Contact a Hypertherm Technical Service Associate for information and support.
	An optical sensor is dirty.	▪ Remove the tubes from the optical sensors. ▪ Liberally clean the optical sensors with isopropyl alcohol. ▪ Dry the optical with compressed air.

Faults

Static seal: The high-pressure seal at the output end of the high-pressure cylinder

Dynamic seal: The high-pressure seal that is nearest the hydraulic center section

Fault conditions cause the pump to turn off.

Alarm	Cause	Solution
Fault 1: Hydraulic Fluid >65C The hydraulic fluid temperature is higher than 65°C (149°F).	The system is not cooling sufficiently.	Refer to Temperature on page 167.
Fault 1: Intensifier 1 Overstroke to Left **Fault 1: Intensifier 1 Overstroke to Right** An overstroke fault occurs when the hydraulic piston travels faster than the pump can sustain.	A poppet (high-pressure or low-pressure) is stuck or is leaking.	Check the low-pressure poppet on the same side as the overstroke. Check the high-pressure poppet on the opposite end from the overstroke. Refer to Overstroke on page 159.
Fault 1: Low Inlet Water Pressure The water pressure at the manifold is lower than the minimum setting.	The supply-water pressure is lower than 2.8 bar (40 psi).	Increase the supply water pressure.
	Pressure is lost because of a leak.	Identify the source of a leak and correct the problem.
	The supply water is off.	Turn **ON** the supply water.
Fault 2: Input to Primary Motor Not Received	The controller did not receive a signal from the starter when the pump was turned on.	▪ If the soft starter fault light is on, look for loose wires. ▪ Make sure the contactor on the starter is operating correctly.
Fault 2: Primary Motor The primary motor did not start.	The motor is not cooling sufficiently.	▪ Clean the air inlet. ▪ Clean the outlet and the cooling fins. ▪ Reduce the ambient air temperature, if possible.
	The motor is being started too frequently.	Wait longer between stopping and starting the motor.
	The motor bearing is too hot.	Lubricate the bearing.
	A fuse in the electrical enclosure has blown.	Replace the fuse.

Alarm	Cause	Solution
Fault 2: Primary Motor The primary motor did not start.	The soft starter sensed a fault.	▪ Turn the primary breaker disconnect ever on the electrical enclosure door to **OFF**. ▪ Turn the primary breaker disconnect ever on the electrical enclosure door to **ON**. It can take e several minutes for the system to reboot.
	The relief valve on the pump manifold has failed.	Contact a Hypertherm Technical Service Associate for information and support.

Alarm	Cause	Solution
Fault 2: Water Pressure Control Error The pump did not get to the target water pressure within the expected time.	The orifice has failed.	Check the condition of the orifice. Replace it, if necessary.
	A component inside the hydraulic center section has failed.	Contact a Hypertherm Technical Service Associate for information and support.
	▪ The hydraulic pressure transducer on the pump manifold has failed. ▪ The pressure control valve on the pump manifold has failed. ▪ The relief valve on the pump manifold has failed. ▪ The hydraulic compensator on the pump has failed.	Contact a Hypertherm Technical Service Associate for information and support.
Fault 2: Hydraulic Fluid Level is Low The float switch in the hydraulic fluid tank monitors the fluid level.	A hydraulic fitting or a hydraulic hose is leaking.	Fix the leak.
Fault 2: Hydraulic Fluid 45C Sensor	The temperature sensor in the hydraulic fluid tank has failed.	Replace the sensor.
Fault 2: Hydraulic Fluid > 65C for > 3 minutes	The hydraulic fluid is too hot.	Refer to Temperature on page 167.
Fault 2: Left Dynamic Seal **Fault 2: Right Dynamic Seal** **Fault 2: Left Static Seal** **Fault 2: Right Static Seal** **Fault 3: Left Dynamic Seal** **Fault 3: Right Dynamic Seal** **Fault 3: Left Static Seal** **Fault 3: Right Static Seal**	The SMI senses an imminent high-pressure seal failure.	Replace the seal.

A warning or a fault occurs during the start sequence

The start sequence timers are adjustable. Refer to Start Procedure Timers on page 209 for information.

Intensifier

Leaks

WARNING	If a high-pressure poppet part is damaged, replace the assembly (high-pressure poppet, spring, and seat).
	Identify the source of a leak and correct the problem. A leak can cause damage to the water fittings.
	If a fitting leaks after tightening it to the maximum torque value, disassemble the parts. Repair or replace parts that show deterioration, corrosion, or damage.
	Blocked weep holes in the dynamic seal backup or the seal housing cause water to go into the hydraulic system. Make sure that the weep holes are clean.
	Weep holes throughout the high-pressure water system let water or hydraulic fluid escape from leaking parts. Fluid leaking from a weep hole is a sign of a defective part or a loose connection.
	The SMI monitors the rate of fluid drops from the static seal and the dynamic seal.

Damage to the high-pressure water seals and the hoops is the most common cause of water leaking from the intensifier. Water dripping from the high-pressure cylinder shows that seal replacement will soon be necessary.

	Numbers pointing to items in the illustration correspond with numbers in the table.

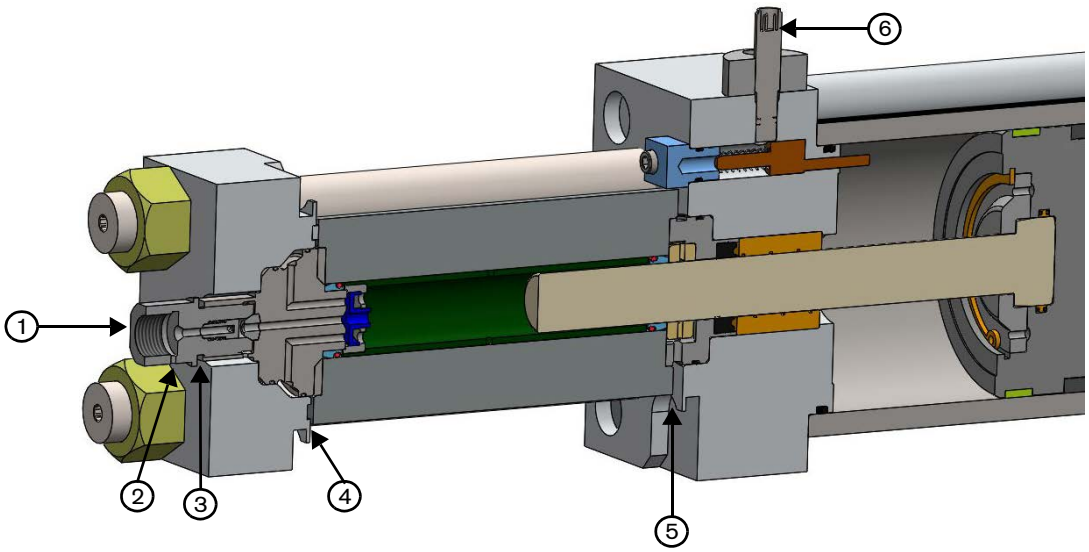

	Symptom	Cause	Solution
1	**The fitting or the output adapter is hot.**	The high-pressure water fitting is not installed correctly.	Make sure that some of the threads on the high-pressure tubing are visible at the fitting.
		The high-pressure poppet is leaking.	▪ Disassemble the parts and look for flaws, deterioration, erosion marks, or cracks. ▪ Make sure that the mating surfaces are smooth and clean. ▪ If damage is found, replace the component.
2	**Water leaks from the output adapter weep hole.**	A high-pressure tubing connection is loose or damaged.	▪ Examine the connection. ▪ Make sure that the fitting is tightened correctly and to the correct torque value.
		The tube end is cracked or damaged.	Replace the component.
		The output adapter has failed.	

	Symptom	Cause	Solution
3	**Hot water leaks from the high-pressure seat weep hole.**	The output adapter is loose.	Make sure that the adapter is tightened to the correct torque value.
		The high-pressure poppet seat has failed.	▪ Disassemble the parts and look for flaws, deterioration, erosion marks, or cracks. ▪ Make sure that the mating surfaces are smooth and clean. ▪ If damage is found, replace the component.
		The face of the check valve is cracked.	Replace the check valve. If the leaking water is hot, replace the seat and the poppet.
	Cold water leaks from the high-pressure seat weep hole.	The O-ring on the check valve body has failed.	Replace the O-ring.
4	**Cold water leaks from the static seal weep hole.**	A fitting connection is bad.	Make sure that the fitting is tightened to the correct torque value.
		A high-pressure seal has failed.	Replace the component.
		The check valve O-ring nearest to the high-pressure seal has failed.	
	The fitting is warm or the low-pressure water line is pulsing.	The low-pressure poppet is leaking.	Repair or replace the poppet.
			The check valve is cracked. Replace the check valve.
5	**Hydraulic fluid leaks from between a high-pressure end cap and a high-pressure cylinder.**	The hydraulic end cap bolts are not tightened.	Make sure that the end cap bolts are tightened to the correct torque value.
	Water leaks from the dynamic seal housing weep hole.	The rod seal has failed. The O-ring or O-ring backup on the seal housing has failed.	Replace the component.
		A high-pressure seal is damaged or has failed.	▪ Disassemble the parts and look for flaws, deterioration, erosion marks, or cracks. ▪ Make sure that the mating surfaces are smooth and clean. ▪ If damage is found, replace the component.
6	**Hydraulic fluid leaks from the system.**	The O-ring on the proximity switch has failed.	Replace the O-ring or the sensor.
—	**Water leaks at a rate of more than 30 ml/minute.**	The high-pressure seal has failed.	Replace the seal.
	Hydraulic fluid leaks at a rate of more than 30 ml/minute.	The hydraulic seal has failed.	

	Symptom	Cause	Solution
—	**Water leaks from the system.**	The high-pressure cylinder has failed.	Replace the cylinder.
		The check valve body has failed.	Replace the check valve body.
—	**Hydraulic fluid leaks from anywhere on the intensifier.**	An O-ring or an energized seal spring has failed.	Replace the component.
			If the high-pressure seal is removed from the plunger when you disassemble the intensifier, replace the seal.
		The collar on a high-pressure water fitting is not correctly installed.	Install the fitting correctly.
		A fitting on the high-pressure tubing is not tight enough.	▪ Tighten the fitting to the maximum torque value. ▪ Disassemble the parts and look for flaws, deterioration, erosion marks, or cracks. Make sure that the mating surfaces are smooth and clean. ▪ If damage is found, replace the component.
		A tubing end is cracked or damaged.	Replace the tubing.

A leaking high-pressure seal in the intensifier can push water past the rod seal and into the hydraulic fluid.

Hydraulic fluid contaminated with water has a milky appearance. Contaminated hydraulic fluid can cause damage to the hydraulic pump.

Replace the hydraulic fluid and examine all of the parts, including the inner surfaces of the hydraulic fluid tank, the hydraulic hoses, and the seals.

It could be necessary to drain and flush other areas such as the shift valve, the hydraulic manifolds, and the hydraulic pump.

Overstroke

Is the bleed-down valve hot?

Yes	The bleed-down valve has failed.	Repair or replace the bleed-down valve.
	The bleed-down valve is not getting air.	▪ Make sure that the compressed air source is on. ▪ Make sure that the compressed air hose is not damaged. ▪ Make sure that the compressed air hose is connected correctly.
No	The difference between the values on the prefilter water-pressure gauge and the postfilter water-pressure gauge is lower than 0.7 bar (10 psi).	Replace the water filters.
	The prefilter water-pressure gauge shows that the low-pressure water is lower than 2.8 bar (40 psi).	▪ Make sure that the water to the pump is on. ▪ Make sure that the low-pressure water line is connected to the intensifier. ▪ If the pump has a boost pump, examine the 10-micron water filter. If the filter is black, the boost pump has failed and must be replaced. Contact a Hypertherm Technical Service Associate for information and support. ▪ While the pump is operating, make sure that the LED on the low-pressure water drain valve solenoid is on. The light shows that the solenoid is closed.
	Low water pressure can cause an overstroke without triggering the low-pressure alarm for the low-pressure water.	

If 1 side of the intensifier is stroking too fast, is there a leak from a weep hole on the intensifier?

Yes	High-pressure seal	Inspect the high-pressure seal.
	Check valve weep hole	Check the output adapter torque.
		Check the high-pressure fitting torque.
	High-pressure endcap and high-pressure cylinder	Check the torque.
		The check valve or the high-pressure cylinder is cracked
		Inspect the check valve O-ring.

No	Is the output temperature hot?	
	Yes	Inspect the high-pressure poppet.
	No	Inspect the low-pressure poppet. ▪ Examine the low-pressure poppet and the check valve body. ▪ Make sure that the mating surfaces are clean and smooth with a mirror like finish. ▪ Repair or replace the low-pressure poppet. ▪ Repair or replace the poppet retainer. ▪ Make sure that the low-pressure poppet fits in the poppet retainer without sticking. Shake the assembly and listen for the poppet moving inside.
	Is the overstroke is to the left?	A poppet is sticking, worn, or damaged. ▪ Check the low-pressure poppet on the left side of the intensifier. ▪ Check the high-pressure poppet on the right side of the intensifier.
	Is the overstroke is to the right?	A poppet is sticking, worn, or damaged. ▪ Check the low-pressure poppet on the right side of the intensifier. ▪ Check the high-pressure poppet on the left side of the intensifier.

If both sides of the intensifier are stroking too fast, is a leak visible?

Yes	The high-pressure tubing or a fitting is leaking.	Identify the source of a leak and correct the problem.
	A high-pressure water seal is worn or damaged. If the high-pressure seal is removed from the plunger when you disassemble the intensifier, replace the seal.	▪ Disassemble the intensifier. ▪ Examine the parts. Look for flaws, deterioration, erosion marks, corrosion, or cracks. ▪ Make sure that the mating surfaces are smooth and clean. ▪ If damage is found, replace the component.
	The bleed-down valve is leaking or has failed.	Repair or replace the bleed-down valve.
	The needle and the seat in the cutting head are leaking. ▪ The on-off valve has failed. ▪ The cutting head has failed.	▪ Examine the parts. Look for flaws, deterioration, erosion marks, corrosion, or cracks. ▪ Make sure that the mating surfaces are smooth and clean. ▪ If damage is found, replace the component.
No	The orifice is worn, has failed, or is incorrectly installed. A worn or damaged orifice can increase the demand for high-pressure water from the intensifier. The orifice is the wrong size.	Replace the orifice.
	The low-pressure water relief valve is venting water to the drain.	Remove the 3/8-inch tube from the valve at the outlet fitting and monitor for leaks.

The intensifier does not stroke to either side

Cause	Solution
Intensifier control is off. When intensifier control is off, the primary screen shows a red × on the intensifier symbol.	Turn intensifier control on. Refer to Intensifier Control on page 216.
The cutting head is off.	Turn on the cutting head.
A proximity switch or the proximity switch cord has failed.	Replace the component. Contact a Hypertherm Technical Service Associate for information and support.
An indicator spring is broken or damaged. **An indicator pin is stuck.**	If the amber lights are on at the same time, a proximity switch might have failed, an indicator spring could be broken, or an indicator pin might be stuck. Examine all parts to find the cause of the fault.

The intensifier strokes to one side and stops

Cause	Solution
A proximity switch has failed.	▪ Interchange the proximity switches (but not the wires). If the intensifier stalls on the opposite end, replace the proximity switches. ▪ Examine the indicator pin for burrs. The pins should move easily to the bottom of the bore. ▪ Make sure that the indicator pin springs are not broken and that they are the same length.
A shift pin is damaged. The shift pin is found at the ends of the coil on the pilot valve.	While the pump is in cooling mode, push on the shift pin on the stalled side. ▪ If the intensifier strokes to other side, the problem is electrical. ▪ If the intensifier does not move, the problem is mechanical.

The intensifier strokes and does not get to the target water pressure

A pressure transducer in the water manifold senses the supply water pressure. If the pressure decreases to a value that is lower than the setpoint, the monitoring circuit opens and causes a fault.

Cause	Solution
There is a blockage in the high-pressure tubing or at the orifice.	Remove the blockage from the high-pressure tubing. Clean or replace the orifice.
An orifice has failed.	Replace the orifice.
The orifice is not the correct size or too many are being used at the same time.	Make sure that the number of orifices and their sizes are sufficient for the pump's output.
The thimble filter on the on-off valve is clogged or defective.	Clean or replace the component.
A hydraulic piston seal is worn or damaged.	Contact a Hypertherm Technical Service Associate for information and support.
There is a leak in the system.	Identify the source of a leak and correct the problem.
A low-pressure poppet is sticking, worn, or damaged.	▪ Examine the face of the poppet and the mating face on the check valve. Make sure that the faces are smooth and flat and have an almost mirrored finish. ▪ Repair or replace the low-pressure poppet. ▪ Make sure that the low-pressure poppet fits in the poppet basket without sticking. ▪ Repair or replace the check valve.
A high-pressure poppet is sticking, worn, or damaged.	Replace the high-pressure poppet, the spring, and the seat.

Cause	Solution
A component in the high-pressure end has failed.	▪ Check the temperature of the high-pressure cylinders. ▪ If 1 is hot, disassemble it and look for flaws, deterioration, erosion marks, or cracks in the parts, including the check valve and piston seal. ▪ Disassemble the check valve and look for flaws, deterioration, erosion marks, or cracks. Make sure that the mating surfaces are smooth and clean with a mirror like finish. ▪ If damage is found, replace the component.
The bleed-down valve has failed.	If the bleed-down valve feels hot or if water comes out of the drain hose, repair or replace the bleed-down valve.
A water filter is clogged.	Replace the water filters.
The boost pump has failed.	If the filter is black, the boost pump has failed and must be replaced. Contact a Hypertherm Technical Service Associate for information and support.

High-pressure water seal life is short

If the high-pressure seal backups have a short life, make sure that the plunger bearing is not worn.

Cause	Solution
A component is damaged or has failed.	▪ Do preventive maintenance according to the recommended schedule. ▪ Examine the high-pressure cylinder, the plunger, and the high-pressure water seals and hoops. ▪ Look for flaws, deterioration, erosion marks, corrosion, or cracks. ▪ Make sure that the mating surfaces are smooth and clean. ▪ If damage is found, repair or replace the component.
The supply-water flow or pressure is too low.	Make sure that the supply-water flow and pressure are sufficient. Refer to the Specifications section in this manual.
The proportional control valve is not operating correctly.	Contact a Hypertherm Technical Service Associate for information and support.
The water quality is not sufficient.	Make sure that the water is clear and orderless. Refer to Test the water quality on page 93.
Hydraulic fluid leaks from anywhere on the intensifier	An O-ring has failed. Replace the component.
The pressure in the water accumulator tank is too low.	Check the air pressure in the water accumulator tank.

Hydraulic fluid

Problem	Cause	Solution
The cooling water temperature is too high.		
Water-cooled system	The cooling water is not turned on.	Turn **ON** the cooling water.
	The cooling water is too warm.	If the cooling water or the supply water temperature is higher than 24.0°C (75°F), cool the water before use.
Air-cooled system	The ambient temperature is too high.	Consider supplemental cooling.
	The fan is not generating enough airflow.	▪ Make sure that the fan motor breaker is not tripped. ▪ Make sure that the heat exchanger fins are not dirty or clogged.
	The thermal overload relay turned off the fan motor.	Refer to Warnings on page 150.
The sensor is not sensing the correct temperature.	The cord for the hydraulic fluid temperature/level sensor is unplugged or damaged.	▪ Plug in the sensor. ▪ Replace the cord.
	The temperature sensor is faulty or damaged.	Replace the sensor.
The hydraulic fluid pressure is too low.	There is a leak in the system.	Examine the pump for hydraulic fluid leaks. Monitor these areas: ▪ Hydraulic fluid tank access cover ▪ Hydraulic connections ▪ Valves ▪ Top and bottom decks
	The hydraulic fluid level is too low.	▪ Make sure that the hydraulic fluid level is at the top mark on the sight gauge. ▪ Add hydraulic fluid, if necessary.
	The cut pressure is not set correctly.	Make sure that the cut pressure is set correctly.
	The pump is in pierce-pressure mode.	Make sure that the pump is in cut-pressure mode.
	The relief valve on the hydraulic manifold has failed.	Contact a Hypertherm Technical Service Associate for information and support.

Problem	Cause	Solution
The hydraulic fluid level is too low. A float switch in the hydraulic fluid tank causes an alarm when the hydraulic fluid level is too low. Make sure that the hydraulic fluid level is at the top mark on the sight gauge.	A hydraulic fitting or a hydraulic hose is leaking.	▪ Fix the leak. ▪ Tighten the fitting to the correct torque value. ▪ Replace the hose. ▪ Replace the O-ring.
	Hydraulic fluid was lost during maintenance.	Add hydraulic fluid.
Water leaks into the hydraulic fluid.	In water-cooled systems, water can enter the hydraulic system through the heat exchanger.	Contact a Hypertherm Technical Service Associate for information and support.
The hydraulic fluid in the tank has a milky appearance.	A leaking high-pressure seal in the intensifier can push water past the energized seal spring energized seal spring and into the hydraulic fluid. Contaminated hydraulic fluid can cause damage to the hydraulic pump.	Replace the hydraulic fluid.
	Water-cooled system The heat exchanger has failed. It could be necessary to drain and flush other areas such as the shift valve, the hydraulic manifold, and the hydraulic pump.	Examine the parts, including the inner surfaces of the hydraulic fluid tank, the hydraulic hoses, and the seals. Look for flaws, deterioration, erosion marks, corrosion, or cracks. If damage is found, replace the component.

Temperature

ⓘ	A sensor monitors the hydraulic fluid temperature in the tank. Increased temperature can mean that there is a problem with the cooling system. Hydraulic fluid that is too hot is thin, which can accelerate wear on the parts, increase the formation of sludge, degrade the fluid, and decrease its lubrication and protective qualities.
ⓘ	Hydraulic fluid that is too cool is thick and causes increased friction and poor lubrication.
ⓘ	High altitude and ambient air temperatures can have an effect on the temperature of hydraulic fluid.

Hydraulic fluid temperature alarms

When the hydraulic fluid temperature is 55°C (131°F):	▪ At 45°C (113°F), a switch closes to start the cooling fan.
	▪ The operator interface shows **WARNING: HYDRAULIC FLUID >55C.**
	▪ The beacon light flashes amber.
	▪ The fan operates for 10 minutes.
	  ▪ If the hydraulic fluid temperature is lower than 55°C (131°F) after 10 minutes, the fan turns off.
	  ▪ If the hydraulic fluid temperature is higher than 45°C (113°F) after 10 minutes, the fan continues operating.

When the hydraulic fluid temperature is 65°C (149°F):	▪ The operator interface shows **FAULT 1: HYDRAULIC FLUID >65C.** ▪ The beacon light flashes red. ▪ The intensifier turns off. ▪ The pump operates in cooling mode for 3 minutes.
If the temperature remains at or higher than 65°C (149°F):	▪ The operator interface shows **FAULT 2: HYDRAULIC FLUID >65C FOR >3 MINUTES.** ▪ The primary motor turns off.

Problem	Cause	Solution
The operator interface shows a hydraulic fluid temperature alarm.		
Water-cooled system	The cooling water supply or the chiller is turned off.	Turn **ON** the water supply or the chiller.
	The cooling water is too warm.	If the cooling water or the supply-water temperature is higher than 24°C (75°F), cool the water before use.
	The heat exchanger is not operating correctly.	▪ Make sure that the heat exchanger fins are not dirty or clogged. ▪ Flush the heat exchanger.
Air-cooled system	The ambient air temperature is too high.	Consider adding a chiller to the system for supplemental cooling.
	The fan is not generating enough airflow.	▪ Make sure that the fan motor breaker is not tripped. ▪ Clean the air cooler.
	The thermal overload relay turned off the fan motor.	Reset the relay.
	The sensor is not sensing the correct temperature.	▪ Plug in the sensor. ▪ Replace the cord.
	The temperature sensor is faulty or damaged.	Replace the sensor.

The pump makes noise during operation

Air in the hydraulic system can make the pump noisy during operation.

1. Use a 13-mm socket or wrench to tighten the hose clamps on the suction hose that goes from the hydraulic fluid tank to the bottom of the hydraulic pump.
2. Use a torque wrench to tighten the hose clamps to a maximum of 29 N·m (22 lbf·ft).

If the pump is still noisy after tightening the hose clamp, contact a Hypertherm Technical Service Associate for information and support.

Low-pressure water

Problem	Cause	Solution
The supply water pressure is too low. A pressure transducer in the water manifold senses the supply water pressure. If the value on the prefilter water-pressure gauge is lower than 2.8 bar (40 psi), the water pressure going to the intensifier is too low. When the pressure is at a value that is lower than the setpoint, the monitoring circuit opens and causes a fault.	The orifice is defective.	Replace the orifice.
	There is a leak in the system.	Make sure that the intensifier does not stroke when it is in cut-pressure mode with the cutting head turned off. If it does stroke, check the bleed-down valve and the high-pressure tubing for leaks.
	A check valve is damaged.	Examine the check valves. Repair or replace them, if necessary.
	The pump is in pierce-pressure mode or is set incorrectly.	Put the pump in cut-pressure mode. Make sure that the cut pressure is set correctly.
	The supply water is not turned on.	Turn **ON** the supply water.
	A water filter is clogged.	Replace the water filters.
	The relief valve on the pump manifold has failed.	Contact a Hypertherm Technical Service Associate for information and support.
	The supply-water pressure or flow is not sufficient.	Make sure that the supply water meets the requirements found in the Specifications section of this manual.
The supply-water pressure is too high. If the value on the prefilter water-pressure gauge is higher than 7.6 bar (110 psi), the water pressure is too high.	A water filter is clogged.	Replace the water filters.
	The boost pump bypass relief valve is not adjusted correctly.	Contact a Hypertherm Technical Service Associate for information and support.
	The boost pump is not needed.	The low-pressure water parts are rated for a maximum pressure of 8.6 bar (125 psi). In environments with high supply-water pressure, the boost pump can increase the water pressure to higher than the maximum. This can cause damage to the water filter and other parts. If the value on the prefilter water-pressure gauge is higher than 4.8 bar (70 psi): ▪ In the electrical enclosure, turn the switch on the boost pump motor contactor to **0**. ▪ On the operator interface, turn **OFF** boost pump monitoring.

Seal Maintenance Indicator (SMI)

The SMI monitors the rate of fluid leaking from the static seal and the dynamic seal.

Alarms

The controller monitors the pump while it is operating. When the controller senses a problem that is likely to cause damage to the equipment, the operator interface shows an ***Alarms*** screen and the beacon light flashes.

After the alarm is acknowledged, a box on the intensifier symbol shows where the leaking seal is. A yellow box with a 1 in it means that it is a warning. A red box with a 2 in it means that it is a fault.

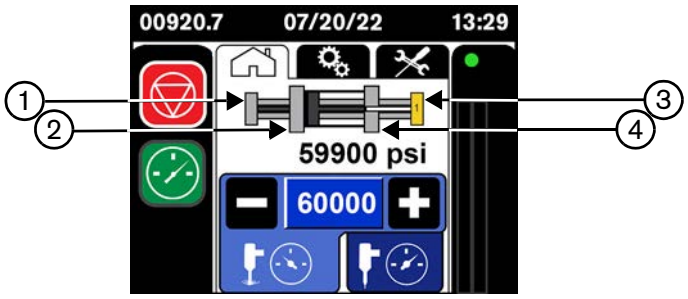

1 Left static seal
2 Left dynamic seal
3 Right static seal
4 Right dynamic seal

Replace the seal.

If the **RUN** symbol is touched after a fault condition, the ***Seal Change*** screen shows on the operator interface.

- Touch the ✓ symbol to acknowledge that a seal was replaced.
- Touch the X symbol to close the screen. The fault alarm shows on the screen after 2 hours.

Controller errors

Input-output status

This screen shows the status of inputs to and outputs from the controller.

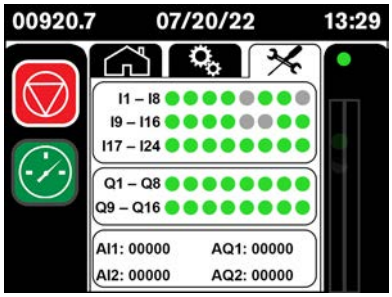

Status: = On = Off

This table describes the assigned inputs and outputs. These can be helpful for troubleshooting.

I1	Hydraulic fluid level
I2	Hydraulic fluid temperature is higher than 55°C (131°F)
I3	Hydraulic fluid temperature is higher than 65°C (149°F)
I4	Hydraulic fluid temperature is higher than 45°C (113°F)
I5	Not used
I6	Intensifier left proximity switch
I7	Intensifier right proximity switch
I8	Not used
I9	SMI address 0
I10	SMI address 1
I11	SMI operating out
I12	SMI fault
I13	Not used
I14	Not used
I15	Controls on
I16	Remote mode on
I17	Remote pump on
I18	Remote pump off
I19	Remote cooling on
I20	Remote pierce-pressure on
I21	Primary motor fault
I22	Primary motor on
I23	Boost pump on
I24	Heat exchanger fan on

Q1	Low pressure on
Q2	Proportional control output
Q3	Low-pressure dump valve
Q4	Pump on
Q5	Fan motor on
Q6	Bleed-down valve available
Q7	Left shift-valve solenoid
Q8	Right shift-valve solenoid
Q9	Beacon light – amber
Q10	Supply cooling water
Q11	Reset remote
Q12	Primary motor on
Q13	Boost pump motor on
Q14	Remote fault light
Q15	Beacon light – red
Q16	Beacon light – green

AI1	Hydraulic pressure
AI2	Remote pressure control
AQ1	Not used
AQ2	Not used

7 Specifications

When applicable, measurements are given in metric units or International System of Units (SI) units followed by US Customary units in parentheses.

1 bar (15 psi) *10 mm (3/8 inch)* *115 N·m (85 lbf·ft)*

This equipment is manufactured in the US, so a metric equivalent is not always available because of inexact conversion.

All DynaMAX 5-series pumps

Environmental conditions

Ambient air temperature	4°C to 35°C (40°F to 95°F)
Relative humidity Noncondensing	95%
Storage temperature Water not drained	2°C to 55°C (35°F to 131°F)

Hydraulic fluid

Type	Antiwear (AW) mineral oil or synthetic hydraulic fluid, ISO viscosity grade (VG) 32 or 46
Hydraulic fluid tank capacity	151 L (40 gallons) If the pump is air cooled, increase the hydraulic fluid volume to fill the hoses and the heat exchanger.
Maximum pressure Set at the factory	224 bar (3,250 psi)
Normal operation temperature	37.8°C to 43.3°C (100°F to 110°F)

If it is not practical to analyze a sample of the hydraulic fluid, Hypertherm recommends replacing the hydraulic fluid every 3,000 hours. Refer to Replace the hydraulic fluid on page 81.

Utilities

Electrical power

ℹ	The system schematic drawings are shipped in an envelope that is found inside the electrical cabinet.

The motor size determines the full load amperes, the overload settings, and the wire sizes. Refer to the specific pump model in this section of the manual or to the system schematic drawing.

The pump uses 3-phase alternating current (AC) electricity. Some components, such as valve solenoids and sensors, use 24-volt direct current (VDC) electricity from a power supply in the electrical enclosure.

Supply water

The quality of the water supplied to the intensifier has a direct effect on the life of the intensifier and the consumables. Bad water quality increases operating costs by causing unnecessary wear on pump parts and shortening maintenance intervals. Mineral deposits can clog the cooling fins in the heat exchanger.

Softened water is necessary for most systems. Get advice from a specialist for recommendations for choosing a water treatment system. Reverse osmosis systems are available from Hypertherm.

Water quality

Test	Optimal range
pH	6.0 to 8.0
Silica (SiO_2)	Lower than 0.0015% (15 ppm)
Water hardness	Equal to or lower than 0.006% (60 ppm / 3.5 grains per gallon)
Total dissolved solids (TDS)	0.0025% to 0.015% (25 ppm to 150 ppm)

Refer to Test the water quality on page 93.

Water temperature

If the cooling water or the supply water temperature is higher than 24°C (75°F), cool the water before use. Water that is too warm can shorten high-pressure seal life.

Compressed air

	Minimum	Maximum
Pressure	5.17 bar (75 psi)	8.27 bar (120 psi)

Air pressure that is too low can prevent the bleed-down valve from closing and can cause the intensifier to overstroke.

Air pressure that is too high can cause damage to the needle and the seat in the bleed-down valve.

DynaMAX 550P

Dimensions and weights

Length	196 cm (77 in.)
Width	97 cm (38 in.)
Height	155 cm (61 in.)

Shipping weight	1,350 kg (3,000 lb)
Operating weight	1,300 kg (2,800 lb)

The shipping weight is for the pump, the pallet, and the packaging. Exact weights are measured at shipment. Operating weight is for an unpackaged pump with hydraulic fluid.

Electrical

37 kW, 50 hp	50 Hz	60 Hz	
Voltage	400 V	208 V to 230 V	460 V
Full-load current	73.8 A	138.2 A to 125.8 A	62.9 A
Primary circuit breaker rating	80.0 A	150.0 A	80.0 A

Water

	Minimum	Maximum
CUTTING WATER IN		
Flow	7.6 L/minute (2 gallons/minute)	—
Pressure	2.8 bar (40 psi)	7.6 bar (110 psi)
CUTTING WATER OUT		
Flow	—	3.8 L/minute (1 gallon/minute)
Pressure	345 bar (5,000 psi)	4,140 bar (60,000 psi)
Cut-pressure factory setpoint	—	4,140 bar (60,000 psi)
Pierce-pressure factory setpoint	1,380 bar (20,000 psi)	—
COOLING IN and COOLING OUT		
Flow	11.4 L/minute (3.0 gallons/minute)	—
Pressure	2.8 bar (40 psi)	7.6 bar (110 psi)

DynaMAX 560P

Dimensions and weights

Length	196 cm (77 in.)
Width	97 cm (38 in.)
Height	155 cm (61 in.)

Shipping weight	1,550 kg (3,400 lb)
Operating weight	1,450 kg (3,200 lb)

The shipping weight is for the pump, the pallet, and the packaging. Exact weights are measured at shipment. Operating weight is for an unpackaged pump with hydraulic fluid.

Electrical

45 kW, 60 hp	50 Hz	60 Hz
Voltage	400 V	460 V
Full-load current	90.7 A	74.4 A
Primary circuit breaker rating	100.0 A	100.0 A

Water

	Minimum	Maximum
CUTTING WATER IN		
Flow	9.5 L/minute (2.5 gallons/minute)	—
Pressure	2.8 bar (40 psi)	7.6 bar (110 psi)
CUTTING WATER OUT		
Flow	—	4.9 L/minute (1.3 gallons/minute)
Pressure	345 bar (5,000 psi)	4,140 bar (60,000 psi)
Cut-pressure factory setpoint	—	4,140 bar (60,000 psi)
Pierce-pressure factory setpoint	1,380 bar (20,000 psi)	—
COOLING IN and COOLING OUT		
Flow	11.4 L/minute (3.0 gallons/minute)	—
Pressure	2.8 bar (40 psi)	7.6 bar (110 psi)

DynaMAX 575P

Dimensions and weights

Length	196 cm (77 in.)
Width	97 cm (38 in.)
Height	155 cm (61 in.)

Shipping weight	1,600 kg (3,500 lb)
Operating weight	1,500 kg (3,300 lb)

The shipping weight is for the pump, the pallet, and the packaging. Exact weights are measured at shipment. Operating weight is for an unpackaged pump with hydraulic fluid.

Electrical

56 kW, 75 hp	50 Hz	60 Hz
Voltage	400 V	460 V
Full-load current	110.3	89.6 A
Primary circuit breaker rating	125 A	100.0 A

Water

	Minimum	Maximum
CUTTING WATER IN		
Flow	11.4 L/minute (3 gallons/minute)	—
Pressure	2.8 bar (40 psi)	7.6 bar (110 psi)
CUTTING WATER OUT		
Flow	—	5.7 L/minute (1.5 gallons/minute)
Pressure	345 bar (5,000 psi)	4,140 bar (60,000 psi)
Cut-pressure factory setpoint	—	4,140 bar (60,000 psi)
Pierce-pressure factory setpoint	1,380 bar (20,000 psi)	—
COOLING IN and COOLING OUT		
Flow	11.4 L/minute (3.0 gallons/minute)	—
Pressure	2.8 bar (40 psi)	7.6 bar (110 psi)

Orifices

US Customary (inches)

Number of orifices	DynaMAX 550P	DynaMAX 560P	DynaMAX 575P
1	0.014	0.016	0.017
2	0.010	0.011	0.012
3	0.008	0.009	0.010
4	0.007	0.008	0.009
5	0.006	0.007	0.008
6	0.005	0.006	0.007

Torque values

!	Use only enough torque to make a sufficient seal. Torque values can vary depending on thread condition. A sufficient seal can be made at values much lower than the maximum values shown in the table.
!	If a fastener or a fitting leaks after tightening it to the maximum torque value, disassemble the parts. Repair or replace parts that show deterioration, corrosion, or damage.

Fasteners

WARNING	Do not use more torque than the values specified in these tables for load-carrying fasteners.

Because of high pressure in the intensifier, all fasteners used on hydraulic and high-pressure water parts are grade 8. Lock washers are necessary for fasteners that are used for cyclic loading.

Special fasteners

These torque values are for fasteners that are coated with antiseize bolt lubricant (white lithium grease).

	N·m	lbf·ft	Wrench size
Indicator pin cap screw	5	4	5/32-inch hex
Proximity switch cap screw	11	8	3/16-inch hex
Hydraulic fluid tank access cover	27	20	15/16 inch
Intensifier cap screw	373	275	7/8 inch
High-pressure end cap nut	373	275	1-1/2-inch socket

Tighten each end cap nut in 68 N·m (50 lbf·ft) increments. Use a repeating cross pattern.

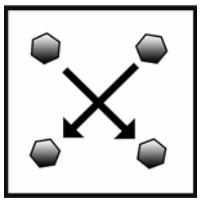

SAE J518 flange bolts

Lubricate O-rings with hydraulic fluid or O-ring lubricant before installing them.

These torque values are for fasteners that are coated with antiseize bolt lubricant (white lithium grease).

1/16-inch dash size	Bolt size (inch)	Code 61 grade 8 (low pressure)		Code 62 grade 8 (high pressure)	
		N·m	lbf·ft	N·m	lbf·ft
-08	5/16-28	33	24	33	24
-12	3/8-16	60	44	60	44
-16	3/8-16	60	44	92	68
-20	7/16-14	92	68	150	111
-24	1/2-13	150	111	296	218

Install a flange

Parts, tools, and materials

Hydraulic fluid or O-ring lubricant

Antiseize bolt lubricant (white lithium grease)

Open-ended wrench
(refer to the table on page 180)

Torque wrench

1. Examine the parts. Look for flaws, deterioration, erosion marks, corrosion, or cracks. Make sure that the mating surfaces are smooth and clean.

   If damage is found, replace the component.

2. Put the O-ring in the flange groove.

3. Put the flange halves together.

4. Lubricate the bolt threads with antiseize bolt lubricant.

5. Put the lock washers on the bolts.

6. Install the bolts. Tighten the bolts by hand.

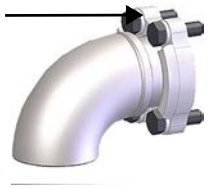

!	To make a good seal, the sealing face must be parallel to the mating surface and the bolt tension must be even.

7. Use a torque wrench to tighten the bolts to the specified value.

!	Tighten each bolt in small increments. Use a repeating cross pattern.

Fittings

WARNING	Do not tighten a fitting too much. The fitting can fail.
	Some torque specifications are found on the technical drawings.

Hydraulic fittings

NPT

	Hypertherm recommends thread sealant for all NPT fittings.
	This table shows maximum values. The torque necessary to make a sufficient seal depends on the condition of the pipe threads and can be much lower than the maximum.

Size (inch)	Maximum torque value					
	Standard		With thread sealant (75% of standard maximum)		For a male tapered pipe thread with a female straight or parallel pipe thread (50% of standard maximum)	
	N·m	lbf·ft	N·m	lbf·ft	N·m	lbf·ft
1/4	34	25	26	19	18	13
3/8	47	35	35	26	24	18
1/2	61	45	46	34	31	23
3/4	75	55	56	41	38	28
1	88	65	66	49	45	33
1-1/4	108	80	81	60	54	40
1-1/2	129	95	96	71	65	48

This table shows maximum values. The torque necessary to make a sufficient seal depends on the condition of the pipe threads and can be much lower than the maximum.

Steel JIC 37°

Lubricate the threads of steel JIC fittings with hydraulic fluid.

This table shows maximum values. The torque necessary to make a sufficient seal depends on the condition of the pipe threads and can be much lower than the maximum.

1/16-inch dash size	Minimum		Maximum	
	N·m	lbf·ft	N·m	lbf·ft
-04	14	10	15	11
-06	23	17	26	19
-08	46	34	52	38
-10	68	50	76	56
-12	95	70	106	78
-16	127	94	141	104
-20	168	124	187	138
-24	212	156	235	173

SAE O-ring boss

Do not use thread sealant on SAE hydraulic fittings.

Lubricate O-rings with hydraulic fluid or O-ring lubricant before assembly.

1/16-inch dash size	Minimum		Maximum	
	N·m	lbf·ft	N·m	lbf·ft
-04	14	10	16	12
-06	24	18	27	20
-08	43	32	47	35
-10	62	46	68	50
-12	88	65	95	70
-16	125	92	136	100
-20	169	125	190	140
-24	203	150	224	165

High-pressure water fittings

WARNING	High-pressure water fittings are designed to make a tight seal. If a fitting is installed incorrectly, it can fail. To prevent causing damage or premature failure, use 2 wrenches when loosening or tightening a high-pressure connection.
	Do not use an adjustable wrench on high-pressure fittings.
	Use only enough torque to make a sufficient seal. Torque values can vary depending on thread condition. A sufficient seal can be made at values much lower than the maximum values shown in the table.
	If a fitting leaks after tightening it to the maximum torque value, disassemble the parts. Repair or replace parts that show deterioration, corrosion, or damage.
	Use a high-pressure antiseize lubricant such as Blue Goop or PURE Goop on high-pressure water fittings.

	N·m	lbf·ft	Wrench size
Output adapter	115	85	1 inch
High-pressure water fittings (gland nuts)			
1/4 inch	34	25	5/8 inch
3/8 inch	68	50	13/16 inch
9/16 inch	150	110	1-3/16 inch

Install a gland nut

Parts, tools, and materials

High-pressure antiseize lubricant such as Blue Goop or PURE Goop

Open-ended wrench

Torque wrench

1. Put high-pressure antiseize lubricant on the gland nut threads, the threads inside the collar, and on the cone and the threads on the high-pressure tube.

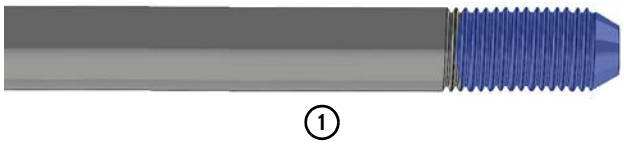

1 High-pressure tube

2 Gland nut

3 Collar

2. Put the gland nut on the high-pressure tube.

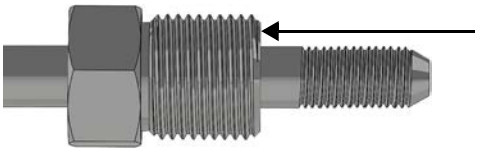

3. Put the collar on the high-pressure tube.

!	Make sure that some of the threads on the high-pressure tube are visible at the fitting.

Incorrectly installed collar: The collar interferes with the sealing surface.

Correctly installed collar: The sealing surface is showing.

4. Push the high-pressure tube fully into the fitting.
5. Tighten the gland nut by hand.
6. Use a torque wrench to tighten the gland nut to the specified value.

Low-pressure water fittings

	Do not use lubricants on low-pressure water fittings.

All low-pressure water connections use push-to-connect fittings.

8 Installation

Safety

WARNING	**Read and understand all of the safety guidelines in this manual.** Refer to Safety on page 19 before operating, doing maintenance on, repairing, and installing this pump.
WARNING	Permit only approved personnel to operate, maintain, and repair this machinery.
	High-pressure water can cause cuts, abrasions, and punctures. Precision parts can have sharp corners or edges. Wear approved hand protection when operating or doing work near this equipment and when touching parts.
	Some materials can cause airborne contamination or particles when cut. Wear approved respiratory protection when operating or doing work near this equipment.
	All installation, repairs, and maintenance of the electrical and plumbing systems must obey national and local codes. This work should be done only by an approved technician. It is the buyer's responsibility to investigate and obey all local codes.
	Obey all safety requirements and applicable safety laws and regulations.

ℹ	Use SAE tools for most procedures.
ℹ	Keep the work area clean and dry. Clean fluid spills immediately. Use catch basins under areas where water or hydraulic fluid can spill during maintenance or repair procedures.

Buyer responsibilities

WARNING	Use supports for plumbing to prevent damage to plumbing from bending stress and fatigue from vibration.
WARNING	This pump can supply water pressure of up to 4,140 bar (60,000 psi). Only use tubing that is rated for this pressure.

The buyer is responsible for these obligations.

- Cooperate with Hypertherm and the Hypertherm original equipment manufacturer (OEM) regarding the installation of the equipment.
- Obey all setup and first-time start up instructions in this manual.
- Research and obey all local codes, including requirements for waste water disposal.
- Install high-pressure tubing.
- Install water-treatment equipment before the pump is installed.
- Make sure that all utilities are available during installation. The site must have sufficient electrical power, air, water, and drain access.
- Make all connections to the pump.
- Fill the hydraulic fluid tank.
- Perform user qualification and training. Refer to User qualification and training on page 20.

Requirements

Location

WARNING	Some locations can be dangerous if the atmosphere contains explosive gas, vapors, or dust. Refer to requirements from the National Electric Code (NEC), the International Electrotechnical Commission (IEC), the Occupational Safety and Health Administration (OSHA), and other national and local codes for information about environmental criteria.
	Do not install this equipment in an area where the temperature is below freezing. Freezing can cause damage to the pump.
	Make sure that there is a minimum clearance of 91 cm (36 inches) on all sides of the equipment. This lets air movement help cool the machine and keeps space available for doing maintenance and repairs.
	Hypertherm recommends installing the pump on a level surface with a difference in height of no more than 8 cm (1/4 inch) between opposite ends.

Install the pump on a solid, flat surface that can hold the weight of the equipment and is thick enough to resist vibration.

Make sure that there is sufficient space for auxiliary equipment such as a water softener, a reverse osmosis system, or a chiller.

Cooling

	Do not use a glycol solution in a chiller at a concentration higher than 25%. Glycol can be added to the cooling circuit to prevent freezing, but glycol is less efficient for cooling than water. Using a chiller with a water-glycol solution can have an effect on the performance of the heat exchanger.
	If this pump is installed in a small space or in a high-temperature location, consider adding a chiller to the system for supplemental cooling.

If the cooling water or the supply water temperature is higher than 24°C (75°F), cool the water before use. Water that is too warm can shorten high-pressure seal life.

Use this table to calculate the cooling load.

DynaMAX pump model	kW (minimum)	Refrigeration tons (minimum tons)	Heat removal requirement (minimum Btu/hour)
550P	9	2.70	32,000
560P	11.5	3.30	40,000
575P	14	4.00	48,000

Hydraulic fluid

Hypertherm does not always ship the pump with hydraulic fluid in the tank.

Domestic pumps usually ship from the factory with AW 32 hydraulic fluid.

Type	Antiwear (AW) mineral oil or synthetic hydraulic fluid, ISO viscosity grade (VG) 32 or 46.
Hydraulic fluid tank capacity	151 L (40 gallons). If the pump is air cooled, increase the hydraulic fluid volume to fill the hoses and the heat exchanger.

High altitude or ambient conditions can have an effect on the temperature of hydraulic fluid. Fluid that is too cool is thick, which causes increased friction and poor lubrication. Fluid that is too hot is thin, which can accelerate wear on the parts, increase the formation of sludge, degrade the fluid, and decrease its lubrication and protective qualities.

Compressed air

Compressed air operates the bleed-down valve.

	Minimum	Maximum
Pressure	5.2 bar (75 psi).	8.3 bar (120 psi).

If the available air pressure is too high, install an air regulator (not included) to reduce the pressure.

Utilities

Electrical power

WARNING	A line disconnect switch for incoming electrical power must be installed near the power supply. This is a supply-voltage disconnecting device or an energy-isolating device.
CAUTION	The primary feed circuit breaker or fuse must be the correct size to control inrush and steady-state current. Use a motor-start circuit breaker or an equivalent if time-delay high-inrush fuses are not permitted by national or local codes.
	The system schematic drawings are shipped in an envelope that is found inside the electrical cabinet.

The motor size determines the full load amperes, the overload settings, and the wire sizes. Refer to the specific pump model in the Specifications section of this manual or to the system schematic drawing.

The pump uses 3-phase alternating current (AC) electricity. Some components, such as valve solenoids and sensors, use 24-volt direct current (VDC) electricity from a power supply in the electrical enclosure.

Supply water

	Do not use deionized water unless the system has stainless steel water fittings. Deionized water can cause the plumbing parts to fail.
	Local codes can require a backflow prevention valve to separate the pump from the facility's potable water.

Water quality

	Water quality reports that show pH, silica, and hardness levels are frequently available for no charge from public utility water suppliers.
	Reverse osmosis systems are available from Hypertherm.

The quality of the water supplied to the intensifier has a direct effect on the life of the intensifier and consumables. Bad water quality increases operating costs by causing unnecessary wear on pump parts and shortening maintenance intervals.

Before installing this equipment, test the quality of the supply water. Refer to Test the water quality on page 93 for instructions. Softened water is necessary for most systems. Get advice from a water specialist for recommendations for choosing a water treatment system.

Receive and unpack the equipment

CAUTION	Lifting must be done by a trained operator. Obey all work site safety requirements, the safety instructions for the lifting equipment, and the safety information in this manual.
	For easy reference, write the pump information in the back of this manual.
	Boxes and parts are frequently packed in the pump, or in crates, boxes, and packaging. Look for accessories and spare parts before discarding the packaging.

1. Examine containers, crates, and pallets for damage.
2. Remove the equipment from the shipping crates and pallets.
3. Examine the equipment to make sure that it was not damaged during shipping. If the equipment is damaged, a claim must be filed with the carrier.
4. Make sure that the delivery and shipping documents match the equipment that was ordered and what was received. Report shortages or damages to the OEM or to Hypertherm Waterjet within 10 days of receipt of the equipment.
5. Make sure that these items are included with the pump.
   - Dirty water container
   - Intensifier repair tools
   - These items are usually shipped inside the electrical enclosure:
     - Key for the **LOCAL-REMOTE** key switch
     - Key for the electrical interlock (optional)
     - MicroSD card adapter
     - System schematic drawings
   - Optional items
     - Standard tool kit
     - Spare parts kit
     - Repair and service kits (refer to the Parts lists section of this manual)

Install the pump

CAUTION	Hydraulic, water, and electrical connections can become loose during shipping and normal operation. Examine all connections at installation and during regular maintenance. Make sure that all connections, fasteners, locking devices, hoses, and fittings are tight before starting the pump.
	To connect the pump directly to an external control device, such as a CNC, refer to the CNC manual.
	These instructions are for a typical installation. It could be necessary to install the components in a different order.

Install the pump in a location that agrees with the requirements and recommendations for this equipment. Refer to the specific pump model in the Specifications section of this manual.

Level the pump

	Hypertherm recommends installing this pump on a level surface with a difference in height of not more than 8 cm (1/4 inch) between opposite ends.

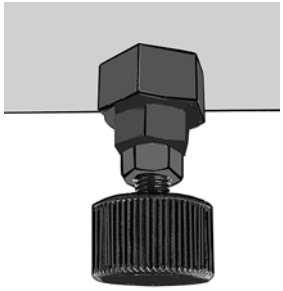

Parts, tools, and materials

Two 1-1/8-inch open-ended wrenches

Level

When the pump is in position, level the unit. There are 2 nuts on each leveling foot on the corners of the frame. Use the lower nut to set the height. The upper nut tightens against the pump frame to keep the leveling foot from moving.

Install the pump-mounted plumbing kit (optional)

Parts, tools, and materials

Pump-mounted plumbing kit

Set of standard wrenches

1. Find the mounting holes for the plumbing kit on the rear of the pump.

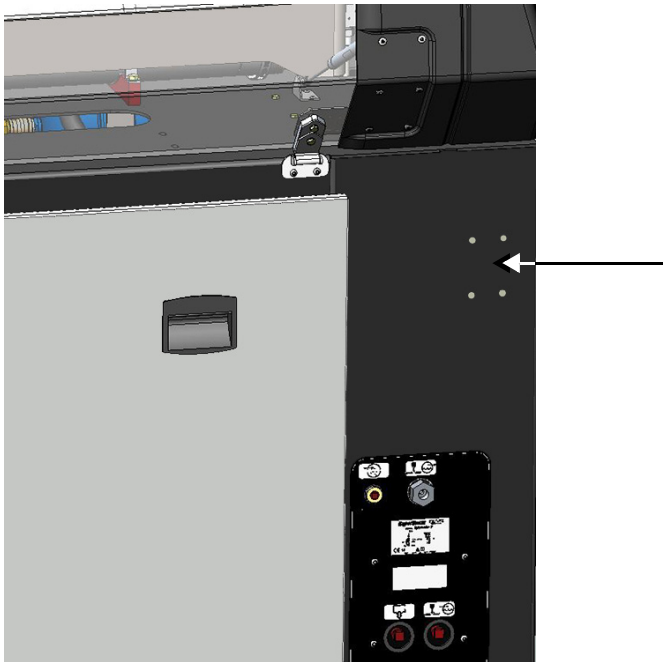

2. Install the angle plate on the pump frame.
3. Use the included hardware to mount the high-pressure tubing whip bracket on the angle plate.

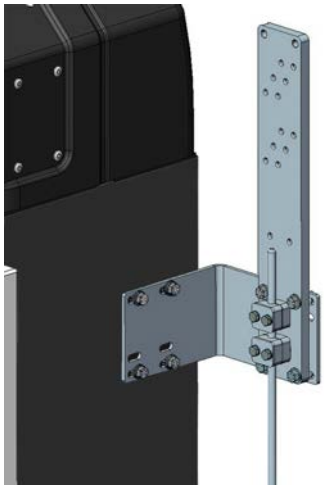

4. After the high-pressure tubing is connected to the utility panel, install the high-pressure tubing clamps on the whip bracket.

Install the external heat exchanger (optional)

DynaMAX pumps have 1-inch hydraulic hoses with 1-5/8-inch hex fasteners.

Parts, tools, and materials

Air-cooled system kit

24 mm or 15/16-inch open-ended wrench (for the cord grip base)

1-1/16-inch open-ended wrench (for the sealing locknut)

1. Use the attached mounting bars to secure the heat exchanger to the ground or on an elevated platform.
2. Locate the wiring access hole in the bottom of the electrical enclosure.

3. Remove the wing nut holding the hole plug.

Keep these parts to use if the pump is stored or shipped.

4. Put the cord grip connector on the cord.

5. Put the cord and the threaded end of the cord grip connector through the wiring access hole.
6. Put the lock nut on the cord grip connector.

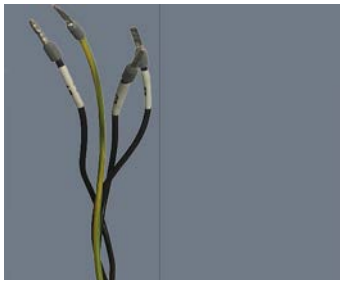

7. Connect the motor wires (L1, L2, and L3) to the motor starter. Connect the ground wire to the grounding lug (PE).

8. Tighten the gland nut on the cord.

Connect the utilities to the pump

CAUTION	Compressed air is an energy source that can eject with force. Be careful when connecting to and disconnecting from this energy source.
CAUTION	**Water-cooled system** **Do not connect the WASTE WATER OUT hose and the COOLING OUT line together.** Connecting these hoses can cause cooling water to back up into the system, which can cause damage to the bleed-down valve and intensifier parts.
CAUTION	**AIR-cooled system** If the **COOLING IN** hose and the **COOLING OUT** hose are not connected to the external heat exchanger before starting the motor, the hydraulic hoses can be damaged.
CAUTION	To prevent dirty water from entering the bleed-down valve, install the **WASTE WATER OUT** hose so that it is below the bleed-down valve fitting.
!	Refer to Torque values on page 179 for torque values and information about how to correctly install high-pressure water fittings.
i	Hydraulic, water, and electrical connections can become loose during shipping and normal operation. Examine all connections at installation and during regular maintenance.
i	The diagram on page 32 shows the flow of water through the pump system.
i	**COOLING IN** and **COOLING OUT** are sometimes referred to as the cooling loop. The cooling loop keeps the hydraulic fluid in the pump at its optimal temperature.
i	The utility connections are identified by hang tags with symbols on them.

Parts, tools, and materials

5/8-inch open-ended wrench

13/16-inch open-ended wrench

1-1/2-inch open-ended wrench

Torque wrench

High-pressure antiseize lubricant such as Blue Goop or PURE Goop

3/8-inch high-pressure male fitting

NPT male fitting

Two 1/2-inch NPT male fittings

Water-cooled system

Two 1-inch NPT male fittings

1. Remove the caps from the fittings and the plugs from the utility connections.

	Keep these parts to use if the pump is stored or shipped.

2. Connect the utilities to the pump.

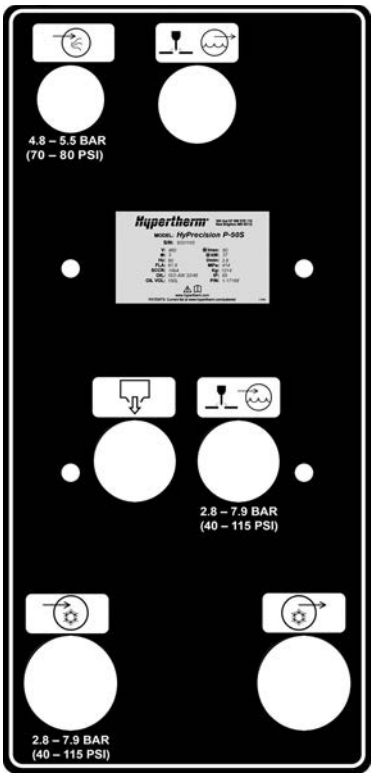

	Refer to Fittings on page 182 for torque values and information about how to correctly install water fittings.
	All low-pressure water connections use push-to-connect fittings.

	CUTTING WATER OUT	
	This tubing carries high-pressure water from the intensifier to the cutting table.	▪ Connect 1 end of the high-pressure tubing to the cutting head. ▪ Connect the other end to the fitting on the pump's utility panel.
	Factory-installed connection: 3/8-inch high-pressure female	
	COMPRESSED AIR	
	The bleed-down valve uses compressed air to operate.	Connect the other end to the fitting on the pump's utility panel.
	Factory-installed fitting: 1/4-inch NPT female	
	WASTE WATER OUT	
	This hose carries water from the bleed-down valve to a drain.	▪ Connect 1 end of this hose to the drain. ▪ Connect the other end to the fitting on the pump's utility panel.
	Factory-installed connection: 1/2-inch NPT female	
	CUTTING WATER IN	
	This line carries low-pressure water from a water softener, a reverse osmosis system, a well, or a public utility to the pump.	▪ Connect 1 end of this line to the supply water. ▪ Connect the other end to the fitting on the pump's utility panel. All low-pressure water connections use push-to-connect fittings.
	Factory-installed connection: 1/2-inch NPT female	
	COOLING IN	
	Water-cooled system	
	This line carries low-pressure supply water from the local utility or a chiller to the pump's cooling loop.	▪ Connect 1 end of this line to the supply water or to the chiller. ▪ Connect the other end to the fitting on the pump's utility panel.
	Factory-installed fitting: 1-inch NPT female	
	Air-cooled system	
	This hose carries hydraulic fluid from the external heat exchanger to the hydraulic fluid tank.	▪ Connect 1 end of this line to the fitting marked **OUTLET** on the external heat exchanger. ▪ Connect the other end to the ball valve at the heat exchanger inlet.
	Factory-installed fitting: -16 JIC male	

	COOLING OUT
	Water-cooled system This line carries low-pressure water from the heat exchanger to the chiller or to the drain. Factory-installed fitting: 1-inch NPT female ▪ Connect 1 end of this line to the chiller or to the drain. ▪ Connect the other end to the fitting on the pump's utility panel.
	Air-cooled system This hose carries hydraulic fluid from the hydraulic fluid tank to an external heat exchanger. Factory-installed fitting: -16 JIC male ▪ Connect 1 end of this line to the fitting marked **INLET** on the external heat exchanger. ▪ Connect the other end to the heat exchanger outlet.

Check the hydraulic fluid

CAUTION	Make sure that hydraulic fluid is available during installation and for the first start.

Look at the hydraulic sight gauge to check the fluid level.

Add hydraulic fluid, if necessary. Refer to Do the first start on page 200 and Add hydraulic fluid on page 79.

Connect the electrical power

CAUTION	This waterjet pump can leak up to 160 mA. To reduce the effects of a high leakage current, connect the pump to a dedicated supply transformer that has separate windings.
	Use electrical parts that are certified by national or local electrical codes.

1. Attach a ground leg to the grounding lug in the electrical enclosure.

   Use this table to find the minimum cross-sectional area of the external copper ground leg.

If the cross-sectional area (S mm²) of the copper phase conductors supplying the equipment is	The minimum cross-sectional area (Sp mm²) is
equal to or higher than 16	equal to S
higher than 16 and lower than or equal to 35	16
higher than 35	S/2

2. Connect electrical power to the primary circuit breaker. The breaker is labeled on the system schematic drawing and in the electrical enclosure as CB-1.

Do the first start

CAUTION	If a water line, a fitting, or a valve could be frozen, do not operate the pump. Thaw the equipment until water moves easily through the system. Examine the parts for damage. Replace parts, if necessary.
CAUTION	**Air-cooled system** If the **COOLING IN** hose and the **COOLING OUT** hose are not connected to the external heat exchanger before starting the motor, the hydraulic hoses can be damaged.
CAUTION	This procedure could cause damage to the orifice. Do not do the first start with a diamond orifice installed. Hypertherm recommends using a ruby orifice during the first 40 hours of operation.

Use this procedure:

- at installation.
- when putting the equipment into operation after storage or shipping.
- after maintenance or repairs are done on the intensifier, the high-pressure water system, or the low-pressure water system.

Do a preoperation inspection

CAUTION	Make sure that all connections, fasteners, locking devices, hoses, and fittings are tight.

- Look for leaks, deterioration, damage, or other conditions that can interfere with operation.
- Look at the sight gauge on the hydraulic fluid tank. Add hydraulic fluid, if necessary.
- Make sure that all warning decals are visible and legible.

Turn on the utilities

CAUTION	A leak can cause damage to the water fittings. Monitor for leaks during this procedure. Identify the source of a leak and correct the problem.

1. Turn **ON** the supply water to the pump.
2. Turn **ON** the compressed air source. Set the air pressure between 5.2 bar and 8.3 bar (75 psi and 120 psi).

CAUTION	Air pressure that is too low can prevent the bleed-down valve from closing and can cause the intensifier to overstroke. Air pressure that is too high can cause damage to the needle and the poppet seat in the bleed-down valve. If the available air pressure is too high, install an air regulator (not included) to reduce the pressure.

3. Turn **ON** the electrical main (line disconnect switch).
4. Turn the primary breaker disconnect lever on the electrical enclosure door to **ON**.

Make sure that the primary motor turns in the correct direction

CAUTION	It is necessary to have access to a turning shaft for this procedure. Do not put an object or a body part near the shaft while the access cover is off.
CAUTION	**Air-cooled pump** To prevent damage to the pump, connect the hydraulic hoses between the pump and the external heat exchanger before doing a check of the motor direction.
CAUTION	Make sure that the primary motor turns in the correct direction before starting the pump. If the motor turns in the opposite direction, the impeller could turn and loosen.This can cause damage to the hydraulic pump.

Do this task to see the direction the motor turns without fully starting the pump.

1. On the operation panel:
   a. Make sure that the **EMERGENCY STOP** button is not engaged. If the button is pushed in, turn the button clockwise until it releases.
   b. Make sure that the **LOCAL-REMOTE** key switch is set to **LOCAL**.
2. Remove the shaft access cover.

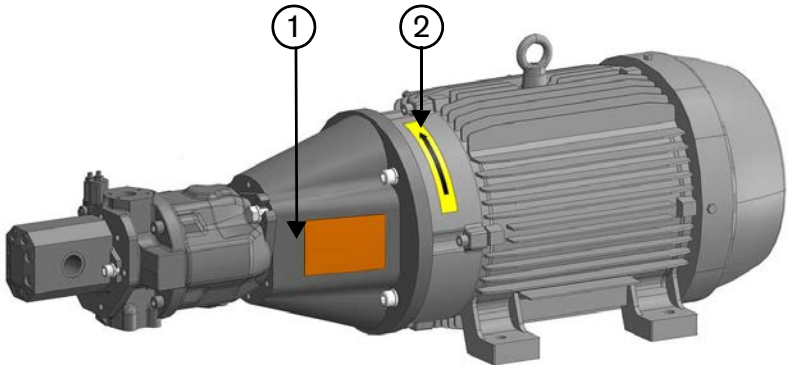

1 Shaft access cover **2** Rotation arrow

3. On the operation panel, push the **CONTROLS ON** button to turn **ON** the control circuit in the pump.
4. On the operator interface, touch the Start symbol to turn **ON** the pump momentarily. Then touch the **STOP** symbol.
5. Make sure that the primary motor turns in the direction shown by the rotation arrow.

   If the pump motor turns the wrong direction

   a. Turn the primary breaker disconnect lever on the electrical enclosure door to **OFF**.

b. Turn **OFF** the electrical main (line disconnect switch).

CAUTION	Use standard lock out–tag out procedures.

c. Inside the electrical enclosure, interchange 2 cables on the top of the primary circuit breaker.

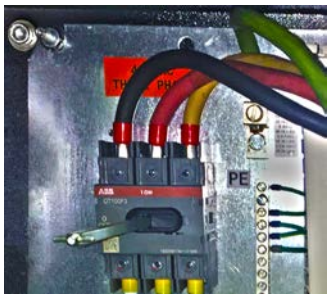

d. Turn **ON** the electrical main (line disconnect switch).

e. Turn the primary breaker disconnect lever on the electrical enclosure door to **ON**.

f. On the operation panel, push the **CONTROLS ON** button to turn **ON** the control circuit in the pump.

g. On the operator interface, touch the **START** symbol to turn **ON** the pump momentarily. Then touch the **STOP** symbol.

h. Make sure that the primary motor turns in the direction shown by the rotation arrow.

6. Install the shaft access cover.

Make sure that the heat exchanger fan motor turns in the correct direction

1. Operate the pump until the fan turns on.
2. Make sure that the fan motor turns in the direction shown by the rotation arrow.

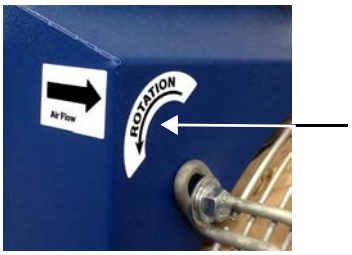

If the fan motor turns in the wrong direction

a. Disconnect the electrical power to the pump.
b. In the electrical enclosure, interchange 2 wires on the bottom of the motor starter.

Turn on the pump

CAUTION	A leak can cause damage to the water fittings. Identify the source of a leak and correct the problem.

1. Set the pressure to 345 bar (5,000 psi).
2. On the operator interface, touch the **COOLING MODE** symbol to turn **ON** the pump.
3. Let the pump operate for 2 to 3 minutes.
4. Monitor for leaks.

Adjust the boost pump pressure

CAUTION	Do not set the boost pump pressure higher than 7.6 bar (110 psi). The supply water components are rated for a maximum of 8.6 bar (125 psi). High pressure can cause damage to the components.
	If the supply water is from a reverse osmosis system, contact a Hypertherm Technical Service Associate for information and support.

Do this task when the pump is operating in cooling mode.

1. Make sure that the value on the prefilter water-pressure gauge is between 6.9 bar and 7.6 bar (100 psi and 110 psi).Remove the rear cover of the pump.
2. Pull out the boost pump pressure regulator knob on the water manifold. Turn it clockwise to increase the pressure or counterclockwise to decrease pressure.

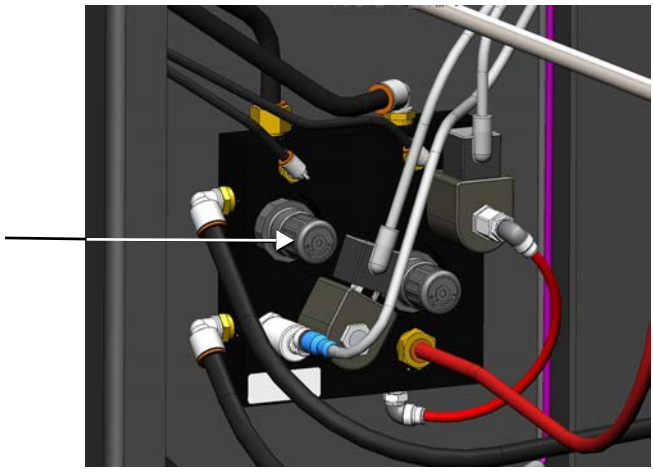

Measure the air pressure in the water accumulator tank

Refer to Low-pressure water on page 91 for instructions.

Flush the pump and the high-pressure tubing

CAUTION	This procedure can cause damage to the on-off valve needle and the seat and to the orifice. Keep spare parts and orifices available.
	If this pump was purchased through an OEM, the OEM could recommend a different procedure to flush out the high-pressure tubing.

It is common for small pieces of metal and debris to be present in newly installed high-pressure tubing. Flush the system to prevent damage to orifices, on-off valve parts, and other components of the high-pressure system.

1. Remove the cutting head and the orifice.
2. Make sure that the on-off valve is closed.
3. Turn **ON** the pump.
4. Set the pressure to 1,380 bar (20,000 psi).
5. On the operator interface, touch the **START** symbol.
6. Make a program that turns the valve on and off in 1-second increments. Operate the program in a loop for 15 minutes.

CAUTION	If a program is not available, turn the cutting head on and off in 1-second intervals for 15 minutes. This loosens debris in the high-pressure tubing.

7. Turn **OFF** the pump.
8. Install a ruby orifice in the cutting head.
9. Turn **ON** the pump.
10. On the operator interface, touch the **START** symbol.
11. Increase the pressure to 2,760 bar (40,000 psi). Operate the program in a loop for 15 minutes.
12. Increase the pressure to 4,140 bar (60,000 psi). Operate the program in a loop for 15 minutes.

	If the on-off valve leaks, examine the needle, the seat, the seals, and the orifice for damage. Replace parts, if necessary.

The pump is ready for operation.

Operator interface: Adjustment screens

ℹ	Not all screens are used when installing the pump.

The adjustment screens on the operator interface let the user change the system configuration.

On the operator interface, touch the adjustments tab to open the primary adjustments screen.

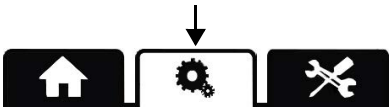

Pump Adjustments on page 207

Intensifier Control on page 216

Seal Maintenance Indicator on page 214

Pressures on page 217

Enter or change the time and date on page 215

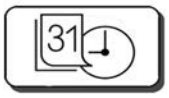

SD Card on page 218

Pump Adjustments

Pump Information on page 208

Remote Configuration on page 211

Start Procedure Timers on page 209

Stop Procedure Timers on page 212

Pressure Adjustments on page 210

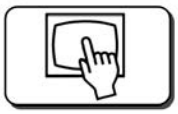

Pump Fault Behavior on page 213

Pump Information

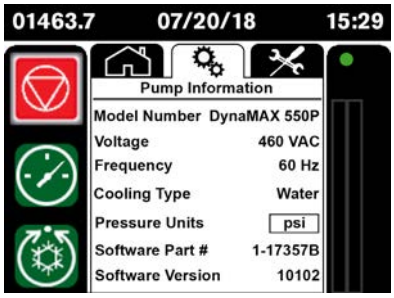

Model Number	This is the model number of the pump.
Voltage	This is the line voltage of the pump
Frequency	This is the line voltage frequency of the pump.
Cooling Type	This the type of heat exchanger the pump uses. ▪ Water: A standard pump has an internal water-cooling system. ▪ Air: An air-cooled pump has an external heat exchanger.
Pressure Units	Touch this field to open a numeric keypad. Touch the up or down arrows to select the units (bar or psi) that show on the operator interface screens.
Software Part #	This is the Hypertherm part number and the revision version for the software installed on the controller.
Software Version	This is the version of the software on the controller.

Start Procedure Timers

All time is in seconds.

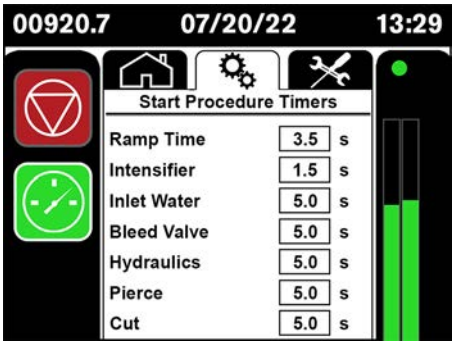

Ramp Time

This is the time that the system takes to increase the high-pressure water pressure from 0 to the target water pressure.

Increase the value to slow the process.

The timer default is between 3 seconds and 8 seconds, based on the pump model.

The value cannot be lower than the default.

Intensifier

The system goes to the next stage when the time between intensifier strokes is this value.

The timer default is 1.5 seconds.

Inlet Water

Stage 1

After the system gets to the minimum water manifold pressure, the inlet water timer starts.

The timer default is 5 seconds.

Bleed Valve

Stage 2

This is the time it takes for the intensifier to push air in the system out through the bleed-down valve.

The timer default is 5 seconds.

Hydraulics

Stage 3

After the bleed-down valve closes, the system has this much time to get to the minimum hydraulic pressure.

The timer default is 5 seconds.

The hydraulic pressure setpoint default is 17 bar (250 psi).

Pierce

Stage 4

The system has this much time to get to the pierce-pressure setpoint.

The timer default is 5 seconds.

Cut

Stage 5

If the pump is in cut-pressure mode, the system has this much time to get to the cut-pressure setpoint.

The timer default is 5 seconds.

Pressure Adjustments

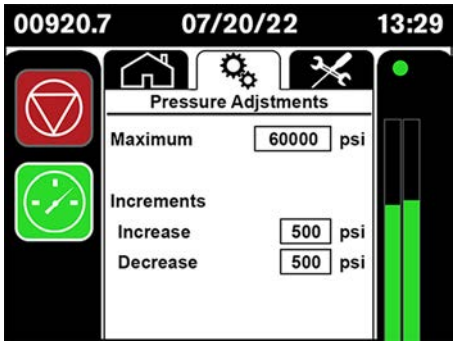

Maximum This is the maximum pressure that the system can be adjusted to.

The default is 4,140 bar (60,000 psi).

Increments

Increase This is how much that the target pressure increases each time the + symbol on the primary operation screen is touched.

The default is 34 bar (500 psi).

The smallest increment is 10 bar (100 psi).

Decrease This is how much that the target pressure decreases each time the – symbol on the primary operation screen is touched.

The default is 34 bar (500 psi).

Remote Configuration

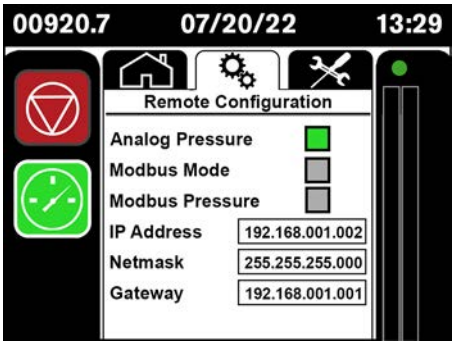

Analog Pressure	This turns the remote analog pressure input on or off.
Modbus Mode	This turns Modbus mode on or off. When this mode is on: ▪ a Modbus symbol shows on the primary operation screen. ▪ the pump is controlled by Modbus TCP over Ethernet.
Modbus Pressure	This turns Modbus control of the pump pressure on or off.
IP Address	Enter a static IP address.
Netmask	Enter the netmask.
Gateway	Enter the gateway.

Stop Procedure Timers

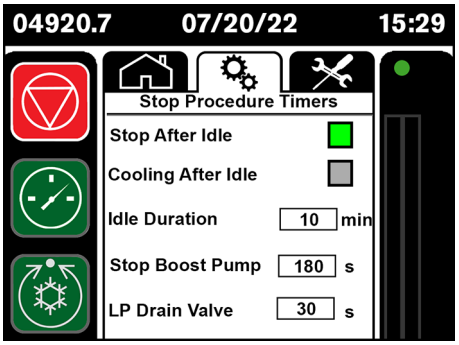

Stop After Idle — The pump is idle when the intensifier stops stroking.

When this feature is on, the pump turns off after the idle duration timer expires.

Cooling After Idle — When this feature is on, the pump goes into cooling mode after the idle duration timer expires.

Idle Duration — This timer determines how long the pump is idle before it turns off or goes into cooling mode.

The default is 10 minutes.

Stop Boost Pump — This timer determines how long the pump is idle before the boost pump turns off.

The default is 180 seconds.

LP Drain Valve — This timer determines how long after the pump turns off the low-pressure (LP) drain valve opens and releases the low-pressure water from the system.

The default is 30 seconds.

Pump Fault Behavior

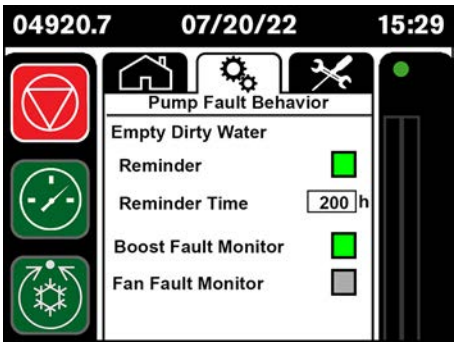

Empty Dirty Water

Reminder	This turns the reminder feature on or off.
Reminder Time	This timer determines how long the pump operates before the reminder is displayed. The default is 200 hours.
Boost Fault Monitor	The system can monitor a boost pump for fault conditions. This turns monitoring on or off.
Fan Fault Monitor	The system can monitor a heat exchanger for fault conditions. This turns monitoring on or off.

Seal Maintenance Indicator

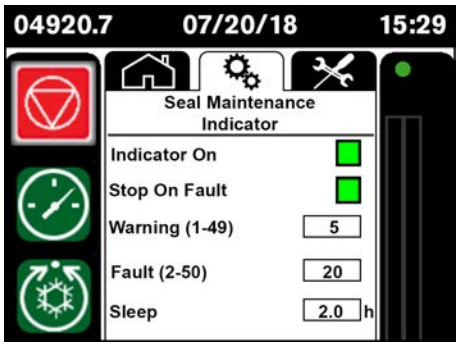

For information about faults and warnings, refer to the **Troubleshooting** section of this manual.

Indicator On	This turns the Seal Maintenance Indicator (SMI) on or off.
Stop On Fault	This turns the Stop On Fault feature on or off. When this feature is on, the pump operates for 30 minutes after a fault is sensed and then turns off.
Warning	The Seal Maintenance Indicator senses leaks from the intensifier. This value determines the number of units that cause a warning. The default is 5 units.
Fault	This value determines the number of units that cause the system to turn off. The default is 20 units.
Sleep	If a fault occurs and the Stop On Fault feature is not on, this timer determines how long after a fault is acknowledged that the system pauses before showing the Alarms screen again. The default is 2.0 hours.

Enter or change the time and date

Change how the time and the date show on the operator interface.

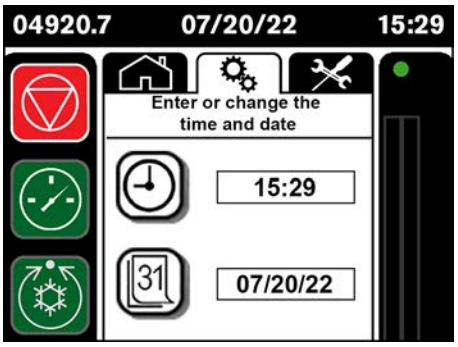

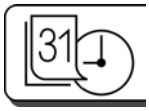

Time symbol and field

Touch the symbol to change the time format.

Options are a 12-hour clock or a 24-hour clock.

Touch the field next to the symbol to open a numeric keypad. Use the keypad to change the time.

Date symbol and field

Touch the symbol to change the date format.

Options are DD-MM-YY or MM/DD/YY.

Touch the field next to the symbol to open a numeric keypad. Use the keypad to change the date.

Intensifier Control

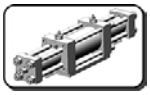

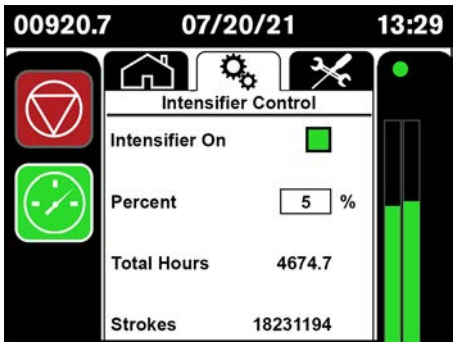

Intensifier On

Touch the box to engage and disengage the intensifier.

When intensifier control is on, the **Intensifier On** box is green.

When intensifier control is off:

- the **Intensifier On** box is gray.
- the primary screen shows a red X on the intensifier symbol.

Percent

Overstroke percent is the increased stroke rate that is permitted before an overstroke fault condition occurs.

The maximum intensifier stroke rate is calculated using the motor wattage and the size of the hydraulic pump. The rate can be adjusted to compensate for variations in plumbing configurations and flow rates.

Touch the field to open a keypad.

Enter the maximum overstroke percentage permitted before a fault occurs.

Total Hours

This shows the total hours that the intensifier has been in operation.

Strokes

This shows the total number of strokes on the intensifier.

A stroke is counted each time a proximity switch is activated.

Pressures

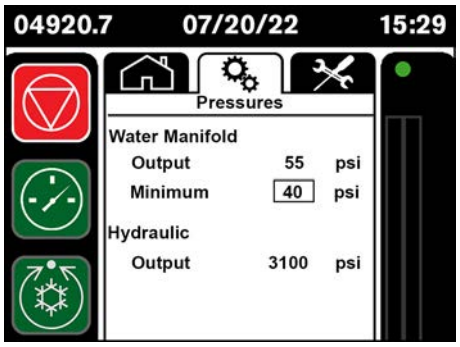

Water Manifold

Output This shows the pressure coming out of the water manifold.

Minimum Touch this field to open a keypad.
Enter the minimum pressure permitted before a fault occurs.

The setpoint is based on the pump model.

DynaMAX 550P	2.0 bar (29 psi)
DynaMAX 560P	1.7 bar (25 psi)
DynaMAX 575P	1.5 bar (21 psi)

Hydraulic

Output This shows the hydraulic pressure in the system.

SD Card

The microSD card stores the current program, the alarm log files, and the maintenance log.Touch the microSD card symbol to see the contents of the card.

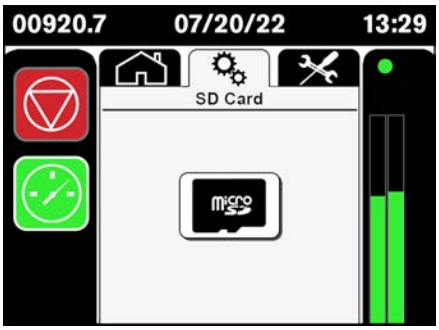

The microSD card stores the current program, the alarm log files, and the maintenance log.

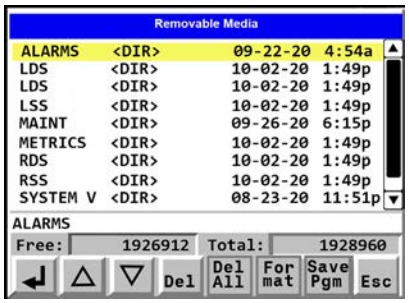

If the microSD card is missing or damaged, the screen shows **SD Card Not Found**.

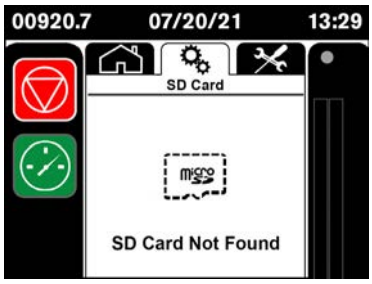

Remote operation

To connect the pump directly to an external control device, such as a CNC, refer to the CNC manual and contact a Hypertherm Technical Service Associate for information and support.

Storage

Refer to Prepare for storage on page 134 for information about storing this equipment.

9 Declaration of Incorporation

To see the Declaration of Incorporation in English and other languages:

1. Go to www.hypertherm.com/docs.
2. Under “Select your product,” choose **Waterjet Family** in the dropdown list.
3. Go to the **Regulatory information section** and click the **+**.
4. Click on the Declaration of Incorporation for your product.

   A PDF of the document downloads to your device.

	These navigation instructions can change without notice.
	For information about this document, refer to Certification test marks on page 13.

Hypertherm Waterjet
305 2nd St NW STE 115
New Brighton, MN 55112 USA
www.hypertherm.com

Hypertherm®

DECLARATION OF INCORPORATION

DATE OF ISSUE: 2021-05-05

PRODUCT: Waterjet Pump

MODEL:

DynaMAX 550P	DynaMAX 560P	DynaMAX 575P
HyPrecision P-50S	HyPrecision P-60S	HyPrecision P-75S

The referenced product meets essential requirements of the following Directives and the relevant sections of harmonised standards:

Directive 2006/42/EC (Machinery)
Annex I: 1.1.2-1.1.7, 1.2.2-1.2.4.3, 1.2.5-1.3.4, 1.3.6-1.7.2, 1.7.4-1.7.4.3
Directive 2104/30/EU (EMC)
EN ISO 12100:2010
EN 60204-1:2018
EN1829-1:2010
EN 61000-6-2:2005/AC:2005
EN 61000-6-4:2007/A1:2011

The technical documentation is compiled in accordance with Annex VII, Part B of Directive 2006/42/EC. In response to a reasoned request, relevant information on the referenced product may be provided electronically. The referenced product is partly completed machinery and must not be put into service until the final machinery into which it is to be incorporated has been declared in conformity with the provisions of Directive 2006/42/EC.

AUTHORISED REPRESENTATIVE:
Koen van den Bemd
European Customer Service
Hypertherm Europe B.V.
Vaartveld 9
4704 SE Roosendaal
The Netherlands

SIGNED: Gordon Rice

Gordon Rice
Executive Vice President - Waterjet

10 Technical drawings

The hydraulic and water system drawing is in this section.

ⓘ	The electrical drawings are shipped in an envelope that is found inside the electrical cabinet.
ⓘ	Hypertherm recommends printing these pages on A3-, tabloid-, or ledger-size paper.

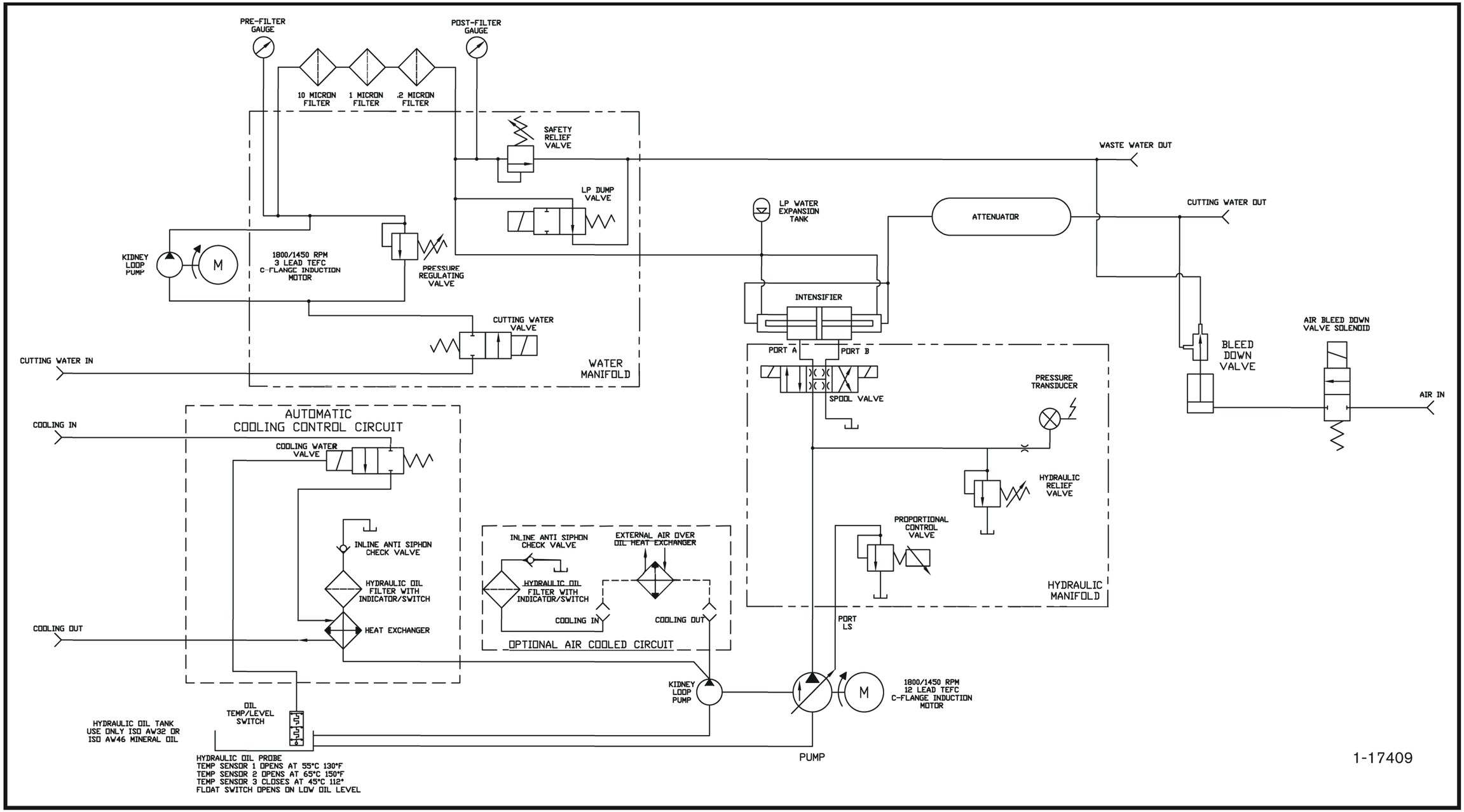
PRE-FILTER GAUGE
POST-FILTER GAUGE
10 MICRON FILTER
1 MICRON FILTER
.2 MICRON FILTER
SAFETY RELIEF VALVE
LP DUMP VALVE
WASTE WATER OUT
LP WATER EXPANSION TANK
ATTENUATOR
CUTTING WATER OUT
KIDNEY LOOP PUMP
M
1800/1450 RPM 3 LEAD TEFC C-FLANGE INDUCTION MOTOR
PRESSURE REGULATING VALVE
INTENSIFIER
CUTTING WATER VALVE
CUTTING WATER IN
WATER MANIFOLD
PORT A
PORT B
SPOOL VALVE
PRESSURE TRANSDUCER
BLEED DOWN VALVE
AIR BLEED DOWN VALVE SOLENOID
AIR IN
COOLING IN
AUTOMATIC COOLING CONTROL CIRCUIT
COOLING WATER VALVE
HYDRAULIC RELIEF VALVE
PROPORTIONAL CONTROL VALVE
INLINE ANTI SIPHON CHECK VALVE
HYDRAULIC OIL FILTER WITH INDICATOR/SWITCH
HEAT EXCHANGER
INLINE ANTI SIPHON CHECK VALVE
EXTERNAL AIR OVER OIL HEAT EXCHANGER
HYDRAULIC OIL FILTER WITH INDICATOR/SWITCH
COOLING IN
COOLING OUT
OPTIONAL AIR COOLED CIRCUIT
HYDRAULIC MANIFOLD
PORT LS
COOLING OUT
KIDNEY LOOP PUMP
M
1800/1450 RPM 12 LEAD TEFC C-FLANGE INDUCTION MOTOR
OIL TEMP/LEVEL SWITCH
HYDRAULIC OIL TANK USE ONLY ISO AW32 OR ISO AW46 MINERAL OIL
HYDRAULIC OIL PROBE
TEMP SENSOR 1 OPENS AT 55°C 130°F
TEMP SENSOR 2 OPENS AT 65°C 150°F
TEMP SENSOR 3 CLOSES AT 45°C 112°
FLOAT SWITCH OPENS ON LOW OIL LEVEL
PUMP
1-17409

Pump information

Model _____

Serial number _____

The serial number is on the data plate, which is found on the back of the pump.

Electrical drawing number _____

The electrical drawing number is found inside the electrical enclosure door on a green label.

Distributor _____

Purchase date _____

Installation date _____

Installed by _____

Thank you

We appreciate hearing from you and receiving your feedback.

Recommend changes for the next update to this manual.

We review your comments and ideas regularly and use them when planning changes. We promise to consider every suggestion. Your satisfaction is our highest priority.

Send this information with your comments to Technical.Service@hypertherm.com.

- DynaMAX 550P/560P/575P Waterjet Pump Operator Manual 811390, revision 0
- Include page numbers, if applicable.
- Tell us the problem or make a suggestion.

Thank you for helping us improve our products.