Powermax45 SYNC®

Service Manual



811480 - Revision 2.1
July 2026

English
Original Instructions

Register your new Hypertherm system

Benefits of registration

- **Safety:** Registration allows us to contact you in the unlikely event a safety or quality notification is required.
- **Education:** Registration gives you free access to online product training content via the Hypertherm Cutting Institute.
- **Confirmation of ownership:** Registration can serve as proof of purchase in case of an insurance loss.

Go to www.hypertherm.com/registration for easy and fast registration.

If you experience any problems with the product registration process, please contact registration@hypertherm.com.

For your records

Serial number: _____

Purchase date: _____

Distributor: _____

Maintenance notes: _____

_____

_____

Warranty information

You can find warranty information for your product at www.hypertherm.com/warranty.

Recycling information

You can find recycling information for your product at www.hypertherm.com/resources/system-support/recycling/.

Contact us

hypertherm.com/contactus


```
Hypertherm, Inc.
 21 Great Hollow Road, P.O. Box 5010
 Hanover, NH 03755 USA
 www.hypertherm.com/contact-us
```

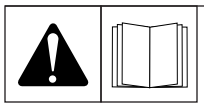

Safety information

WARNING! Before operating any Hypertherm equipment, read the safety instructions in your product's manual, the Safety and Compliance Manual (80669C), Waterjet Safety and Compliance Manual (80943C), and Radio Frequency Warning Manual (80945C). Failure to follow safety instructions can result in personal injury or in damage to equipment.

Copies of the manuals can come with the product in electronic and printed formats. Electronic copies are also on our website. Many manuals are available in multiple languages at www.hypertherm.com/docs.

Pamona is a trademark of Fluke Corporation. TORX is a trademark of Acument Global Technologies, LLC.

FastConnect, FineCut, Hypertherm, Powermax, Powermax45 SYNC, SYNC, and SmartSYNC are trademarks of Hypertherm, Inc. and may be registered in the United States and other countries. All other trademarks are the property of their respective holders.

Environmental stewardship is one of Hypertherm's core values, and it is critical to our success and our customers' success. We are striving to reduce the environmental impact of everything we do. For more information: www.hypertherm.com/environment.

©2024 – 2026 Hypertherm, Inc.

Contents

Electromagnetic Compatibility (EMC)..... 13

1 Prepare to troubleshoot internal components.....15

Where to find information for Powermax45 SYNC.....15
Troubleshooting preparation.....15
Troubleshooting procedures and sequence..... 17
Required test equipment.....18
Do an external inspection.....18
Do an internal inspection.....18
Attach to ground.....19
Frequently used troubleshooting procedures..... 20
Restart the plasma power supply..... 20
Do a cold restart.....20
Do a quick restart.....20
Troubleshooting for gas pressure problems.....20
Install a pressure gauge.....21
Monitor the inlet gas supply.....21
Use a gas hose that is the correct size..... 21
Adjust the pressure manually.....21
Do a gas test to find if the output gas pressure is too low.....21
Keep a clean gas line..... 22
Do a gas test.....23
Stop a gas test..... 24
Do a continuity test on the FastConnect torch receptacle.....24
Do an initial resistance check..... 25

2 Troubleshooting for common problems.....31

Troubleshooting for common problems..... 31
The cut quality is unsatisfactory, or the cut does not sever the workpiece..... 32
There is a problem with the Hypertherm cartridge..... 32
The work lead connection is not satisfactory..... 32
The output current (A) is set too low..... 33
The cut speed is too fast..... 33
The operating mode is incorrect..... 33
There is a gas supply problem..... 33
There is a problem with the torch lead..... 33
An extension cord is not sufficient..... 34
The power PCB is defective..... 34
The power switch is ON, but the power LED is off..... 34
Voltage to the system is missing or incorrect..... 34
The power switch or power PCB is defective..... 34
The solenoid valve is defective..... 34
The fan is defective..... 34
The power LED is on, but no gas flows when you fire the torch..... 35
The torch, torch lead, power PCB, or machine interface connection has damage..... 35
The arc does not transfer to the workpiece..... 36
The work lead connection is not satisfactory..... 36
The pierce height is too high..... 36
Gas flows from the torch when you set the power switch to ON..... 36
The incoming gas pressure is too high..... 36
The solenoid valve or power PCB is defective..... 36
Gas flows when you fire the torch, but there is no plasma arc..... 37
There is a problem with the Hypertherm cartridge, torch, or torch lead..... 37
The gas flow is too high or too low..... 37
The gas quality is unsatisfactory..... 37
The input power is not sufficient..... 38
There is a voltage imbalance on the capacitors..... 38
The plasma arc goes out while you are cutting, or the torch will intermittently not fire..... 38
The work lead is defective or the work lead connection is insufficient for some reason..... 38
The fan is defective..... 38
The plasma arc stopped while cutting, but starts when you fire the torch again..... 39
The Hypertherm cartridge is worn or has damage..... 39
The arc is stretched too far..... 39
The filter element in the air filter is dirty..... 40

The gas pressure is too low or too high....40
The plasma arc makes sputtering and hissing sounds....40
The air filter element is dirty....40
There is moisture in the gas supply line....40
There is a problem with the cartridge....41
The system is not cutting at full cutting power, and the plasma arc does not time out after 5 seconds....41
The work lead connection is not satisfactory....41
The work lead has damage....41
The output current is set too low....41
The power PCB is defective....41
Nothing shows on the 2-digit display, the power switch is set to ON (I), and the Power ON LED is on....42
There is a problem with the voltage or the power source....42
The fan has a short circuit....42
The system changes the gas pressure after you set it manually....43
One of these conditions caused the gas pressure to be changed....43
The system changes the output current (A) or the operating mode after you set them....43
You selected the system setting while the torch was locked....43
The plasma power supply stops (1-phase models)....44
The system energized the trip coil, or the power switch is defective....44

3 Troubleshooting for fault codes....45

Fault icons and fault codes....45
Fault icons....45
Fault codes....46
Operational faults....48
Internal component faults (1-nn-n, 2-nn-n, 3-nn-n)....52
Troubleshooting procedures for fault LEDs and 0-nn-n fault codes....54
Troubleshooting for AC input power that is not stable....54
Fault codes and fault LEDs....55
Corrective action for AC input power that is not stable....55
Troubleshooting for low gas pressure faults....55
Fault codes and fault LEDs....55
Corrective action – gas supply checks....56
Corrective action – more external checks....56
Corrective action – internal checks....57
Verification....57

Troubleshooting for missing gas input faults..... 57
Fault codes and fault LEDs..... 58
Corrective action for the input gas supply..... 58
Corrective action for the solenoid valve and power PCB..... 58
Troubleshooting for TSO and TSC faults..... 61
Fault codes and fault LEDs..... 62
Corrective action for the Hypertherm cartridge..... 62
Corrective action for TSO faults that occur during postflow..... 62
Corrective action for the torch..... 64
Corrective action for the plasma power supply..... 65
Verification..... 67
Troubleshooting for temperature-related faults..... 67
Fault codes and fault LEDs..... 67
Corrective action for temperature faults..... 67
Correction action in the plasma power supply..... 68
Troubleshooting for when the Hypertherm cartridge or torch is not ready to cut..... 68
Fault codes and fault LEDs..... 68
Corrective action for the Hypertherm cartridge and torch..... 68
Corrective action for the torch cap sensor in the torch and torch lead..... 69
Corrective action for the torch cap sensor in the plasma power supply..... 71
Troubleshooting for start signal faults..... 72
Fault codes and fault LEDs..... 72
Corrective action: quick restart..... 73
Corrective action for hand torches..... 73
Corrective action for machine torches and the CNC..... 75
Corrective action for machine torches and the plasma power supply..... 77
Troubleshooting for input voltage faults..... 78
Fault codes and fault LEDs..... 78
Examine the incoming line voltage..... 78
Corrective action for the incoming line voltage..... 78
Corrective action for the power PCB voltage..... 82
Troubleshooting for remote controller faults (0-11-n)..... 84
Fault codes and fault LEDs..... 85
Corrective action for 0-11-0, 0-11-1, and 0-11-2 faults..... 85
Troubleshooting for incorrect output gas pressure conditions (0-12-n)..... 86
Fault codes and fault LEDs..... 86
Corrective action for 0-12-0, 0-12-1, and 0-12-2 faults..... 86
Troubleshooting for Hypertherm cartridge installation faults (0-14-n)..... 87

Fault codes and fault LEDs....87
Corrective action for 0-14-0 faults....87
Corrective action for 0-14-1 faults....88
Troubleshooting for PCB hardware protection faults (0-19-9)....88
Fault codes and fault LEDs....89
Corrective action for 0-19-9 faults....89
Troubleshooting for duty cycle faults (0-40-5)....89
Fault codes and fault LEDs....90
Corrective action for 0-40-5 faults....90
Troubleshooting for torch-lock switch faults (0-50-n)....90
Fault codes and fault LEDs....91
Corrective action for 0-50-1 faults....91
Corrective action for 0-50-2 faults....91
Corrective action for 0-50-3 faults....92
Troubleshooting for torch connection faults (0-52-0)....92
Fault codes and fault LEDs....92
Corrective action for 0-52-0 faults....92
Troubleshooting for an RF communication fault (0-98-1)....93
Fault codes and fault LEDs....93
Corrective action for the Hypertherm cartridge (0-98-1)....93
Corrective action for the torch (0-98-1)....94
Troubleshooting for a plasma power supply or torch communication fault (0-98-2)....96
Fault codes and fault LEDs....96
Corrective action for the plasma power supply (0-98-2)....96
Corrective action for the torch (0-98-2)....97
Troubleshooting procedures for 1-nn-n, 2-nn-n, and 3-nn-n fault codes....101
Troubleshooting for DSP and I/O faults (1-nn-n)....101
Fault codes and fault LEDs....102
Corrective action for 1-00-0 and 1-20-0 faults....102
Troubleshooting for an analog-to-digital converter fault (2-00-0)....102
Fault codes and fault LEDs....102
Corrective action for 2-00-0 faults....103
Troubleshooting for inverter module temperature sensor faults (2-10-n)....103
Fault codes and fault LEDs....103
Corrective action for 2-10-0 and 2-10-1 faults....103
Troubleshooting for solenoid valve pressure sensor faults (2-11-n)....104
Fault codes and fault LEDs....104

Corrective action for electrical interference and pinched wires (2-11-0 and 2-11-1)....104
Corrective action for the power input and solenoid valve coils (2-11-0 and 2-11-1)....104
Corrective action for the solenoid valve sensor and power PCB sensor (2-11-0 and 2-11-1)....106
Troubleshooting for VBUS faults (3-00-0)....107
Fault codes and fault LEDs....107
Corrective action for VBUS faults using test points (3-00-0)....107
Corrective action for VBUS faults using the capacitor terminals (3-00-0)....110
Troubleshooting for fan faults (3-10-n)....111
Fault codes and fault LEDs....112
Corrective action for fan faults (3-10-0 and 3-10-1)....112
Troubleshooting for PFC module temperature sensor faults (3-11-n)....113
Fault codes and fault LEDs....113
Corrective action for 3-11-0, 3-11-1, and 3-11-2 faults....113
Troubleshooting for inverter IGBT faults (3-51-1, 3-52-0)....113
Fault codes and fault LEDs....114
Corrective action for 3-51-1 and 3-52-0 faults....114
Troubleshooting for a power PCB fault (3-60-0)....114
Fault codes and fault LEDs....114
Corrective action for 3-60-0 faults....114

4 Service parts....115

Replacement parts and accessories....115
Plasma power supply, exterior front....115
Plasma power supply, rear....117
Front panel and receptacles, display PCB, power switch....117
Plasma power supply interior, power PCB....119
Plasma power supply interior, pneumatics and fan....120
Plasma power supply interior, wires, CSA 1-phase....121
Plasma power supply interior, wires and EMI PCB, CE/CCC 1-phase....122
Plasma power supply interior, wires, 3-phase....123
Safety critical parts....124
Recommended spare parts....126
Powermax45 SYNC labels....127
Data plate....127
Safety and EMC symbols and marks....128

IEC symbols..... 130

5 Service procedures for the cover, panels, and connectors..... 132

Plasma power supply component replacement safety information..... 132
Replace the plasma power supply cover and handle..... 133
Remove the plasma power supply cover and handle..... 133
Install the plasma power supply cover and handle..... 134
Replace the component barrier..... 136
Remove the component barrier..... 136
Install the component barrier..... 137
Remove and install the front panel..... 139
Loosen the front panel..... 139
Remove the front panel..... 140
Attach the front panel..... 141
Remove and install the rear panel..... 144
Loosen the rear panel..... 144
Remove the rear panel..... 144
Attach the rear panel..... 147
Replace the work lead receptacle..... 149
Remove the work lead receptacle..... 149
Install the work lead receptacle..... 150
Replace the torch quick-disconnect receptacle..... 151
Remove the torch quick-disconnect receptacle..... 151
Install the torch quick-disconnect receptacle..... 152
Replace the power switch (1-phase models)..... 153
Remove the power switch (1-phase)..... 153
Install the power switch (1-phase)..... 154
Replace the power switch (3-phase models)..... 155
Remove the power switch (3-phase)..... 155
Install the power switch (3-phase)..... 155

6 Service procedures for the gas supply..... 158

Replace the air filter bowl and filter element..... 158
Replace the air filter assembly..... 161
Remove the air filter..... 161
Install the air filter..... 161

Replace the fan and fan shroud....162
Remove the fan and fan shroud....162
Install the fan and fan shroud....164
Replace the solenoid valve....166
Remove the solenoid valve....166
Install the solenoid valve....167
Replace the gas supply hoses and 90 degree fitting....169
Remove the gas supply hoses and 90 degree fitting....169
Install the gas supply hoses and 90 degree fitting....170
Replace the gas inlet fittings....171
Remove the gas inlet fittings....171
Install the gas inlet fittings....172

7 Service procedures for the PCBs and related components....174

Replace the display PCB and ribbon cable....174
Remove the display PCB and ribbon cable....174
Install the display PCB and ribbon cable....175
Replace the power PCB....176
Remove the power PCB....176
Install the power PCB....179
Replace the EMI PCB (CE/CCC 1-phase models only)....185
Remove the EMI PCB....185
Install the EMI PCB....187
Replace the bulk capacitors....187
Remove the bulk capacitors....187
Install the bulk capacitors....189
Replace the snubber resistors....190
Remove the snubber resistors....190
Install the snubber resistors....191
Replace internal wires (1-phase models)....192
Remove internal wires (1-phase models)....192
Install internal wires (1-phase models)....194
Replace internal wires (3-phase models)....196
Remove internal wires (3-phase models)....196
Install internal wires (3-phase models)....198
Replace the power cord and strain relief (1-phase models)....200

Remove the power cord (1-phase models)....200
Install the power cord (1-phase models)....201
Replace the power cord and strain relief (3-phase models)....202
Remove the power cord (3-phase models)....202
Install the power cord (3-phase models)....203

8 Change system settings....205
Overview....205
System settings....206
Change system settings....208
Smart mode versus basic mode....209
Smart mode....210
Basic mode....210

9 How the plasma power supply operates....211
Theory of operation....211
Overview....211
Hypertherm plasma power supply ratings....211
200 V – 240 V 1-phase plasma power supply functional description....213
400 V CE/CCC 3-phase plasma power supply functional description....214
480 V CSA 3-phase plasma power supply functional description....214
Plasma power supply system components....215
200 V – 240 V 1-phase plasma power supply....215
400 V CE/CCC and 480 V CSA 3-phase plasma power supply....216

10 System diagrams....218
System diagrams....218
Powermax45 SYNC schematic — 200 V – 240 V 1-phase models....219
Powermax45 SYNC schematic — 400 V CE/CCC and 480 V CSA 3-phase models shown....220
Timing chart for torch start....221

Electromagnetic Compatibility (EMC) introduction

Hypertherm's CE-marked equipment is built in compliance with standard EN IEC 60974-10. The equipment should be installed and used in accordance with the information below to achieve electromagnetic compatibility.

The limits required by EN IEC 60974-10 may not be adequate to completely eliminate interference when the affected equipment is in close proximity or has a high degree of sensitivity. In such cases it may be necessary to use other measures to further reduce interference.

This cutting equipment is designed for use only in an industrial environment.

Installation and use

The user is responsible for installing and using the plasma equipment according to the manufacturer's instructions.

If electromagnetic disturbances are detected then it shall be the responsibility of the user to resolve the situation with the technical assistance of the manufacturer. In some cases this remedial action may be as simple as earthing the cutting circuit, see Earthing of the workpiece. In other cases, it could involve constructing an electromagnetic screen enclosing the power source and the work complete with associated input filters. In all cases, electromagnetic disturbances must be reduced to the point where they are no longer troublesome.

Assessment of area

Before installing the equipment, the user shall make an assessment of potential electromagnetic problems in the surrounding area. The following shall be taken into account:

a. Other supply cables, control cables, signaling and telephone cables; above, below and adjacent to the cutting equipment.

b. Radio and television transmitters and receivers.

c. Computer and other control equipment.

d. Safety critical equipment, for example guarding of industrial equipment.

e. Health of the people around, for example the use of pacemakers and hearing aids.

f. Equipment used for calibration or measurement.

g. Immunity of other equipment in the environment. User shall ensure that other equipment being used in the environment is compatible. This may require additional protection measures.

h. Time of day that cutting or other activities are to be carried out.

The size of the surrounding area to be considered will depend on the structure of the building and other activities that are taking place. The surrounding area may extend beyond the boundaries of the premises.

Methods of reducing emissions

Mains supply

Cutting equipment must be connected to the mains supply according to the manufacturer's recommendations. If interference occurs, it may be necessary to take additional precautions such as filtering of the mains supply.

Consideration should be given to shielding the supply cable of permanently installed cutting equipment, in metallic conduit or equivalent. Shielding should be electrically continuous throughout its length. The shielding should be connected to the cutting mains supply so that good electrical contact is maintained between the conduit and the cutting power source enclosure.

Maintenance of cutting equipment

The cutting equipment must be routinely maintained according to the manufacturer's recommendations. All access and service doors and covers should be closed and properly fastened when the cutting equipment is in operation. The cutting equipment should not be modified in any way, except as set forth in and in accordance with the manufacturer's written instructions. For example, the spark gaps of arc striking and stabilizing devices should be adjusted and maintained according to the manufacturer's recommendations.

Cutting cables

The cutting cables should be kept as short as possible and should be positioned close together, running at or close to the floor level.

Equipotential bonding

Bonding of all metallic components in the cutting installation and adjacent to it should be considered.

However, metallic components bonded to the workpiece will increase the risk that the operator could receive a shock by touching these metallic components and the electrode (nozzle for laser heads) at the same time.

The operator should be insulated from all such bonded metallic components.

Earthing of the workpiece

Where the workpiece is not bonded to earth for electrical safety, nor connected to earth because of its size and position, for example, ship's hull or building steel work, a connection bonding the workpiece to earth may reduce emissions in some, but not all instances. Care should be taken to prevent the earthing of the workpiece increasing the risk of injury to users, or damage to other electrical equipment. Where necessary, the connection of the workpiece to earth should be made by a direct connection to the workpiece, but in some countries where direct connection is not permitted, the bonding should be achieved by suitable capacitances selected according to national regulations.

Note: The cutting circuit may or may not be earthed for safety reasons. Changing the earthing arrangements should only be authorized by a person who is competent to assess whether the changes will increase the risk of injury, for example, by allowing parallel cutting current return paths which may damage the earth circuits of other equipment. Further guidance is provided in IEC 60974-9, Arc Welding Equipment, Part 9: Installation and Use.

Screening and shielding

Selective screening and shielding of other cables and equipment in the surrounding area may alleviate problems of interference. Screening of the entire plasma cutting installation may be considered for special applications.

Chapter 1: Prepare to troubleshoot internal components

Where to find information for Powermax45 SYNC

This service manual includes service parts and procedures for the Powermax45 SYNC® plasma power supply.

For related information, refer to these documents:

- *Safety and Compliance Manual (80669C)*
- *SmartSYNC Torches Service Parts and Procedures Guide (810460)*
- *Powermax45 SYNC Operator Manual (811470)*
- *Powermax45/65/85/105 SYNC Parts Guide (810490)*

The most recent revisions of technical documents are available at www.hypertherm.com/docs.

Technical documentation is current as of the date of its release. Subsequent revisions are possible.

Troubleshooting preparation

The complexity of the circuits requires that service technicians have a working knowledge of inverter power supply theory. In addition to being technically qualified, technicians must perform all testing with safety in mind. If questions or problems arise during servicing, call the Hypertherm® Technical Services team listed in the front of this manual.

⚠ WARNING



ELECTRIC SHOCK CAN KILL

Dangerous voltages in the plasma power supply and at the torch nozzle can cause serious injury or death.



Set the power to OFF (**O**), and disconnect the electric power before removing the cover from the plasma power supply. If the plasma power supply is connected directly to a line-disconnect box, set the line disconnect to OFF (**O**). In the U.S., use a "lock-out / tag-out" procedure until the service or maintenance work is complete. In other countries, comply with appropriate national or local safety procedures.

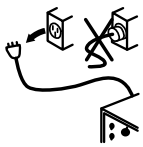

Do not touch live electrical parts! Do not touch the nozzle when the system is powered ON (**I**)! If power is necessary for maintenance, use extreme caution when working near live electrical circuits.

Do not try to repair the power PCB, control PCB, EMI PCB, or solenoid valve PCB. Do not cut away or remove the protective conformal coating from these PCBs. There is a risk of a short circuit between the AC input circuit and the output circuit that can cause serious injury or death.

⚠ WARNING



HOT PARTS CAN CAUSE SEVERE BURNS

Let the temperature of the plasma power supply decrease before you do any maintenance.

⚠ CAUTION



MOVING BLADES CAN CAUSE INJURY

Keep your hands away from moving parts.

Troubleshooting procedures and sequence

This list of resources will help direct you to troubleshooting steps.

When doing the troubleshooting procedures, refer to:

- *Safety and Compliance Manual (80669C)* for detailed safety information
- System diagrams on page 218 for electrical schematics
- Replacement parts and accessories on page 115 for plasma power supply components

Troubleshooting sequence:

1. Power OFF (**O**) and disconnected
2. Do an external inspection on page 18.
3. Do an internal inspection on page 18.
4. Do an initial resistance check on page 25.
5. Power ON (**I**).
6. Refer to Fault icons and fault codes on page 45 and Troubleshooting for common problems on page 31 to help with troubleshooting.

⚠ WARNING



DANGEROUS VOLTAGES CAN CAUSE INJURY OR DEATH

Dangerous voltages in the plasma power supply and at the torch nozzle can cause serious injury or death.

Use extreme caution when working near live electrical circuits.

Live voltages can stay on the DC bus for 30 seconds or more after you disconnect the input power. Let bus voltages dissipate before you start tests. While testing, do not touch the nozzle at the end of the torch.

After you locate and repair the problem, do a test of the plasma power supply for correct operation.

All troubleshooting tests must be done by a qualified service technician. Wear the proper personal protective equipment, and use approved tools and measurement equipment.

Before you purchase a major replacement component, make sure that you have correctly identified the problem with help from Hypertherm Technical Service or the nearest Hypertherm repair facility.

Required test equipment

- Multimeter with a variety of test leads.

The power Printed Circuit Board (PCB) has test points with a diameter of 2.25 mm (0.09 inches) that accept miniature banana plugs (for example, Pamona® 2945 plugs).



Do an external inspection

Examine these components to do a proper external inspection of the system.

1. Inspect the exterior of the plasma power supply for damage to the cover and external components, such as the power cord and plug.
2. Inspect the torch and the torch lead for damage.
3. Inspect the Hypertherm cartridge for damage or wear.
4. Repair or replace components as necessary.

Do an internal inspection

Look inside of the plasma power supply for signs of possible damage.

1. Set the power switch to OFF (**O**), and disconnect the power cord from the power source.
2. Remove the plasma power supply handle and cover.

   Refer to Remove the plasma power supply cover and handle on page 133.

3. Remove the component barrier.

   Refer to Remove the component barrier on page 136.

4. Examine the inside of the plasma power supply:

   - **Power PCB side:** Look for broken or loose wiring connections, burn and char marks, and components that have damage.
   - **Fan side:** Look for gas leaks and loose connections at each pneumatic (gas) connection on the air filter and solenoid valve.

5. Repair or replace components as necessary.

Attach to ground

Make sure that the plasma power supply is grounded correctly before doing troubleshooting procedures.

- Use either the ground clip near the top of the rear panel or the ground screw on the heatsink for all troubleshooting tests where it is necessary to attach the multimeter to ground.

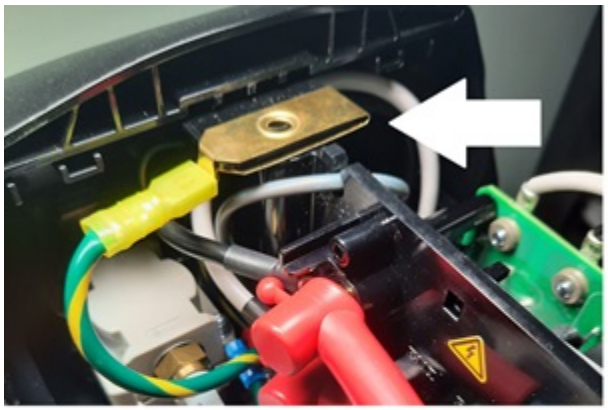

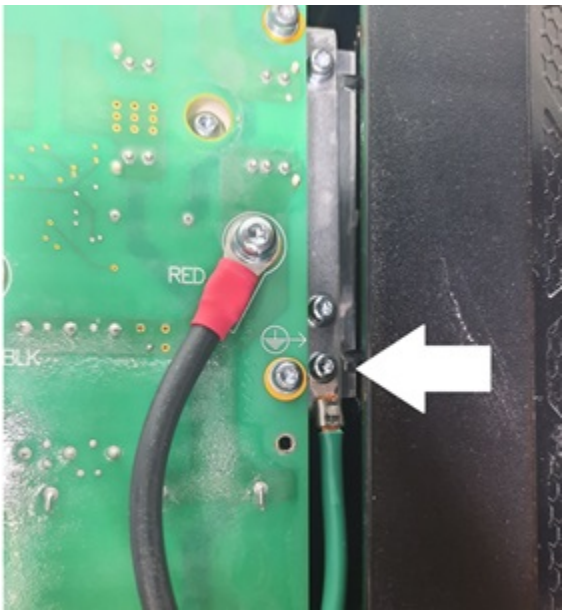

Frequently used troubleshooting procedures

Restart the plasma power supply

- To restart the plasma power supply, set the power switch on the plasma power supply to OFF (**O**) and then set the power switch to ON (**I**).

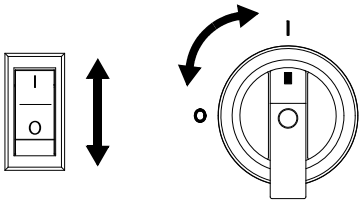

  In some conditions, it is possible that you will be asked specifically to do a "cold restart" or a "quick restart."

Do a cold restart

1. Set the power switch on the plasma power supply to OFF (**O**).
2. Wait approximately 1 minute or until all of the amperage Light Emitting Diode (LED)s on the hand torch go off.
3. Set the power switch on the plasma power supply to ON (**I**).

Do a quick restart

1. Set the power switch on the plasma power supply to OFF (**O**).
2. Immediately set the power switch on the plasma power supply to ON (**I**).

> If a fault occurs while you are using a generator, a quick restart does not always remove the fault. Do a cold restart instead.

Troubleshooting for gas pressure problems

Incorrect gas pressure can cause errors that prevent cutting or that cause problems with cut quality and cut performance.

Install a pressure gauge

- Install an inline pressure gauge at the gas inlet on the rear of the plasma power supply, after all external filtration.
- Use this gauge to monitor the gas pressure during cutting and when the system is idle.
- Make sure that the gas pressure is stable. The pressure reading on the gauge should be stable when you go from idle to cutting and when you go from cutting to idle again.

Monitor the inlet gas supply

- For optimum system performance, make sure that the inlet gas pressure stays between 7.6 bar – 8.3 bar (110 psi – 120 psi) while gas is flowing.

  Never use more than the maximum gas pressure of 9.3 bar (135 psi).

Use a gas hose that is the correct size

- Make sure that the gas hose is the correct size for your system:
  - Use an internal diameter of 10 mm (3/8 inch) or greater for gas hoses that are less than 15 m (50 feet).
  - Use an internal diameter of 13 mm (1/2 inch) or greater for gas hoses that are 15 m – 30 m (50 feet – 100 feet).

Adjust the pressure manually

- The plasma power supply adjusts gas pressure automatically, but you can adjust the gas pressure manually if necessary. To adjust the gas pressure manually, push and hold the Mode button and turn the adjustment knob at the same time.
- When testing is completed, push the Mode button again to go back to the automatic settings mode.

Do a gas test to find if the output gas pressure is too low

- Do a gas test to see if the plasma power supply's actual output gas pressure is lower than the set pressure by more than an acceptable quantity.

  The set pressure is the gas pressure that the system sets to align with the type of Hypertherm cartridge and torch installed. Refer to Do a gas test on page 23.

Keep a clean gas line

It is extremely important to keep a clean, dry gas line to prevent oil, water, dirt, and other contaminants from causing damage to internal components. A clean gas line also helps you to get optimal cut quality and consumable life.

Dirty, oily air is the root cause of many common problems that occur in Powermax® plasma power supplies. In some conditions it can void the warranty on the plasma power supply and torch.

The plasma power supply's built-in air filter can remove particulates as small as 5 microns. It can also remove some moisture from the gas supply.

Before you begin:

- Comply with the gas quality recommendations in Hypertherm plasma power supply ratings on page 211.
- If you work in an environment that is extremely warm and humid, or if work site conditions let oil, vapor, or other contaminants into the gas line, install an external filtration system that cleans the gas supply before it gets into the plasma power supply.

NOTICE

DIRTY, OILY AIR CAN CAUSE DAMAGE TO THE AIR FILTER BOWL

Some air compressors use synthetic lubricants that contain esters. Esters can cause damage to the polycarbonates in the air filter bowl.

Add more gas filtration if necessary.

1. Examine the air filter element in the plasma power supply's built-in air filter.



2. Replace the filter element if it is dirty.
3. Clean the air filter bowl to remove oil, dirt, and other contaminants.

   A yellow residue on the filter bowl shows that oil is getting into the gas supply line.

4. Replace the O-ring at the top of the air filter bowl if it has cracks or other damage.
5. If you use an external air filtration system, clean or replace any parts in it that are possibly dirty.

Do a gas test

Use a gas test to see if sufficient gas pressure is exiting the torch. The gas test lets you see the plasma power supply's actual gas pressure so that you can compare it to the inlet set pressure.

Before you begin:

⚠ CAUTION

GAS WILL FLOW FROM THE TORCH

Point the torch away from you before doing a gas test, as a precaution. Always keep hands, clothes, and objects clear of the torch tip. Never point the torch toward yourself or others.

1. Make sure the correct mode is selected for the process you want to validate (Cut or Gouge).
2. Press-and-hold the Mode button for approximately 5 seconds.

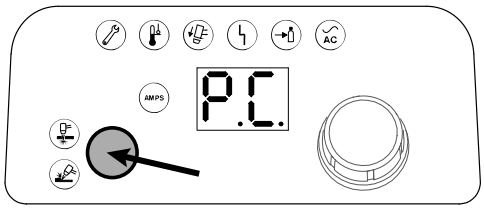

3. Release the Mode button when the 2-digit display shows P.C.

   P.C. indicates pressure check.

   a. The set pressure flashes on the 2-digit display before the actual output gas pressure shows.

   b. Make note of the set pressure so that you can compare it to the actual pressure.

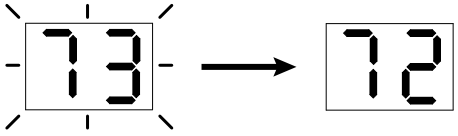

If the 2-digit display shows "0.0" (bar) or "00" (psi) when you enter gas test mode, the torch is not in a "ready to fire"

state. In this case, pull the trigger. The system then emits the warning puffs of air and displays the actual pressure.

During a gas test:

- Air flows continuously from the torch tip.
- The 2-digit display shows the output gas pressure.
- The AMPS LED stays off.

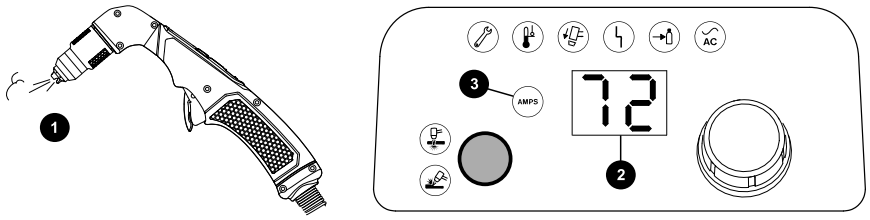

1 Air from the torch tip

2 Two-digit display

3 AMPS LED

Stop a gas test

- To stop a gas test, press the Mode button, or turn the adjustment knob.

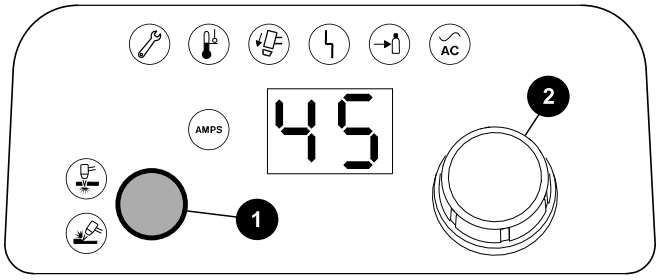

1 Mode button

2 Adjustment knob

When you stop a gas test:

- The 2-digit display shows the output current (A).
- The AMPS LED illuminates.

Do a continuity test on the FastConnect torch receptacle

Use this table to help check continuity between the FastConnect torch receptacle and J19 on the power PCB. If there is no continuity between any two test points, replace the torch FastConnect™ receptacle.

Torch FastConnect receptacle	J19 on power PCB	Wire color
5	1	BLU
7	2	ORG
6	3	VIO
11	4	YEL
12	5	WHT
13	6	RED
9	7	BRN
10	8	GRY
8	9	BLK
14	10	N/A

Do an initial resistance check

The initial resistance check will help determine if there is excessive resistance in the plasma power supply.

Before you begin: All resistance values must be taken with the power cord disconnected and all internal plasma power supply wires attached. Do an internal inspection on page 18 before you continue with this procedure.

- The type of multimeter you use significantly affects the results of the tests in this section. The resistance values in this manual are intended as a general reference point.
- If resistance values indicate a problem based on the range of values provided in this section, isolate the problem by removing wires attached to the resistance check points or component until you find the problem.
- After you locate and repair the problem, refer to Troubleshooting preparation on page 15 to do a test of the plasma power supply for correct operation.

⚠ WARNING

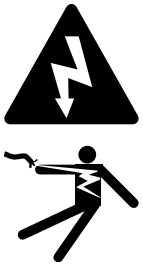

ELECTRIC SHOCK CAN KILL

Let the system release internal voltages before you touch components on the EMI PCB (CE/CCC 1-phase models only). There can be live voltages on the EMI PCB after the system is set to OFF.

1. Set the power switch to OFF (**O**), and disconnect the power cord from the power source.
2. Disconnect the torch from the plasma power supply.
3. Set the power switch to ON (**I**).
4. Measure the resistance across the input leads.

   Pull back the red insulating covers, and measure the resistance where the wires connect to the center panel (or to the Electromagnetic Interference (EMI) PCB, for CE/CCC 1-phase models).

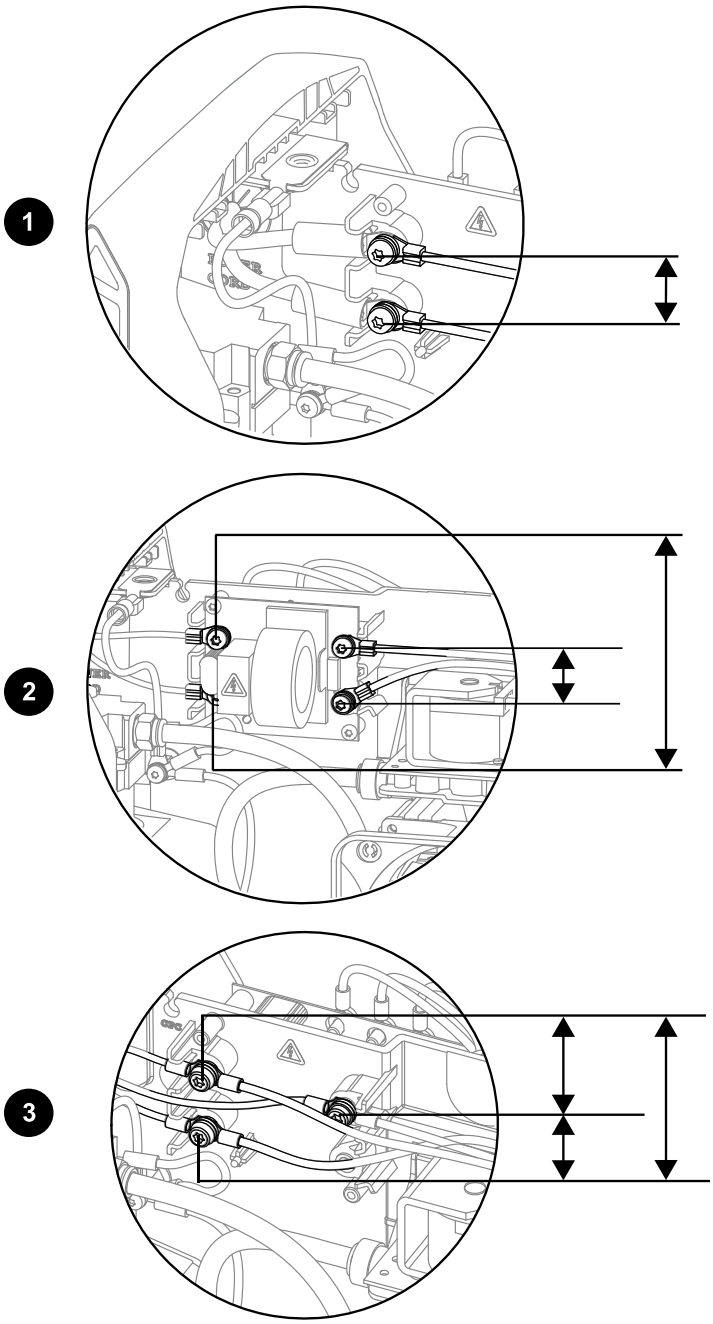

	Plasma power supply model	Resistance across input leads		Plasma power supply model	Resistance across input leads
1	CSA 200 V – 240 V 1-phase	75 kiloohms (kΩ)	**3**	400 V, 480 V 3-phase (all models)	450 kiloohms (kΩ)
2	CE/CCC 200 V – 240 V 1-phase	36.5 kiloohms (kΩ) **1**			

1 The resistance should be consistent when measured on both sides of the EMI PCB.

5. Measure the resistance from the input leads to ground to make sure that it reads as open.
   - For all models, make sure that the resistance from input to ground is >20 megaohms (MΩ).
   - With the electric power disconnected and the power switch set to OFF (**O**), make sure that all circuits read as open.
   - The electrical values shown are ±25%. However, this range is intended only for reference. Resistance values can vary widely depending on the type of multimeter and the polarity used to measure the readings.

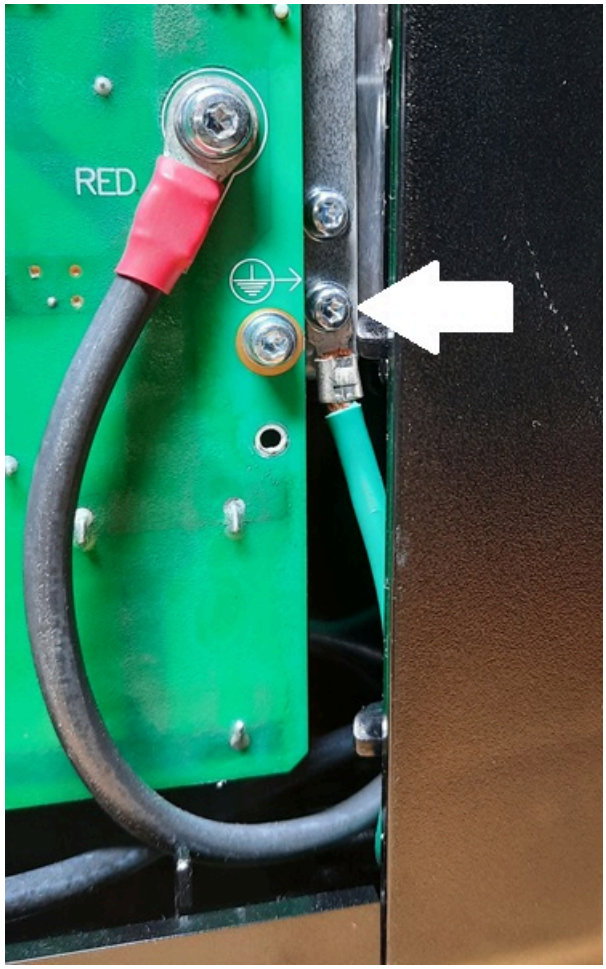

6. Disconnect the torch from the plasma power supply.
7. Measure the output resistance for the values in the table.

   The red nozzle wires connect to J15 (RED) on the power PCB. The white electrode wire connects to J18 (WHT).

Measure resistance from	All models with torch disconnected
Work lead (J23) to nozzle (J15)	200 kiloohms (kΩ)
Work lead (J23) to electrode (J18)	16 kiloohms (kΩ)
Electrode (J18) to nozzle (J15)	200 kiloohms (kΩ)
Work lead (J23), nozzle (J15), and electrode (J18) to ground	>20 megaohms (MΩ)

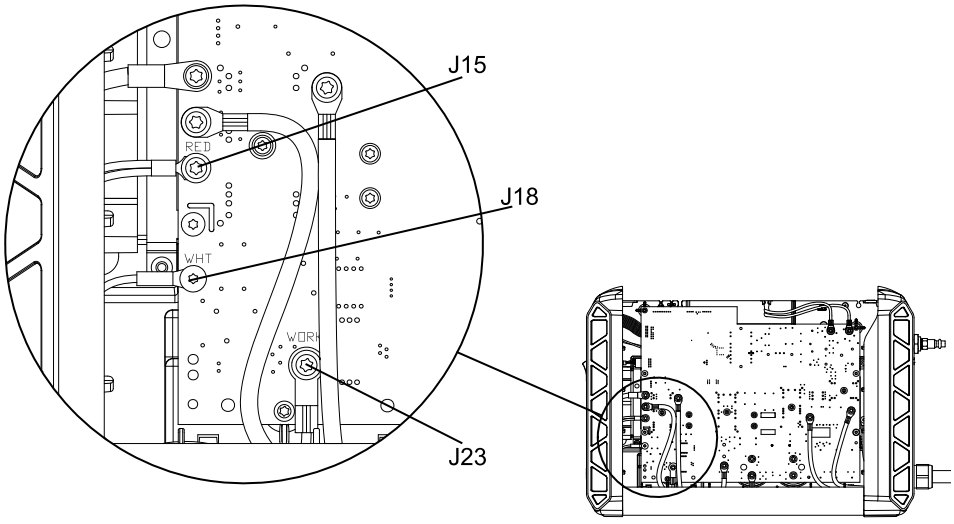

8. Measure the resistance on each snubber resistor.

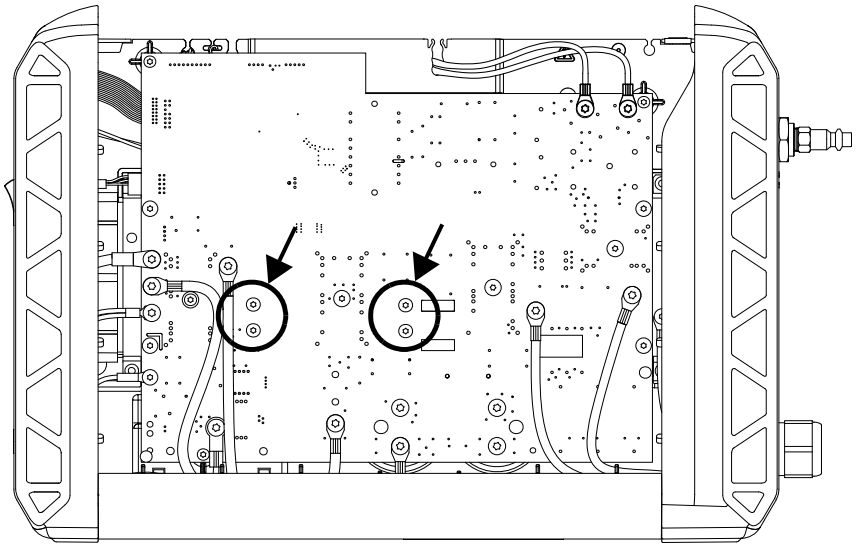

9. Make sure that the resistance is approximately 10 ohms (Ω).
10. If you do not find problems during the visual inspection or the initial resistance check, and the plasma power supply continues to not operate correctly, refer to Troubleshooting for common problems on page 31.

What to do next:

- Before you do recommended troubleshooting steps, make sure that you know the information in System diagrams on page 218 and Overview on page 211.
- Before you purchase a major replacement component, make sure that you speak about the problem with Hypertherm Technical Service or the nearest Hypertherm repair facility.

Chapter 2: Troubleshooting for common problems

Troubleshooting for common problems

Before you do the recommended troubleshooting steps, make sure that you know the information in System diagrams on page 218 and Overview on page 211. Before you purchase a major replacement component, make sure that you speak about the problem with Hypertherm Technical Service or the nearest Hypertherm repair facility.

⚠ WARNING



ELECTRIC SHOCK CAN KILL

Let the system release internal voltages before you touch the capacitors. The capacitors can hold a charge for several minutes after the system is set to OFF.

⚠ WARNING



INSTANT-ON TORCHES – PLASMA ARC CAN CAUSE INJURY, BURNS

Ignition of the plasma arc occurs immediately when you pull the torch trigger. Before changing the cartridge, one of the following steps is necessary. Whenever possible, complete the first step.

Set the power switch on the plasma power supply to OFF (**O**).

OR

Move the torch-lock switch to the yellow lock (**X**) position. Pull the trigger to make sure that the torch does not fire a plasma arc.

The cut quality is unsatisfactory, or the cut does not sever the workpiece

Unsatisfactory cut quality can have many causes. These can be related to the cartridge, the work lead connection, the gas supply, or an incorrect output current, cut speed, operating mode, or extension cord.

There is a problem with the Hypertherm cartridge

- The Hypertherm cartridge is not installed correctly.
- The Hypertherm cartridge is at end-of-life.

1. Make sure that the Hypertherm cartridge is not too loose or too tight.
2. Examine the Hypertherm cartridge for wear or damage.
3. Replace it if it is worn or has damage.

   A higher rate of Torch Stuck Open (TSO) and Torch Stuck Closed (TSC) faults is typical as a Hypertherm cartridge gets near end-of-life.

The work lead connection is not satisfactory

1. If possible, move the work clamp closer to the area of the workpiece you are cutting.
2. Clean the area where the work clamp comes into contact with the workpiece or cutting table, and remove rust, paint, or other residue.

3. Make sure that the cutting table is correctly grounded and has good contact with the workpiece.
4. Examine the work lead for a loose connection at the plasma power supply and at the work clamp.
5. Examine the work clamp, and repair or replace the clamp if necessary.
6. Examine the work lead, and repair or replace the lead if necessary.

The output current (A) is set too low

Increase the output current (A) as necessary.

The cut speed is too fast

Decrease the cut speed as necessary.

The operating mode is incorrect

Use the correct operating mode for the cutting application. Use a Hypertherm gouging cartridge in Gouge mode. Use a Hypertherm cutting cartridge in Cut mode.

There is a gas supply problem

1. For optimum system performance, make sure that the inlet gas pressure stays between 7.6 bar – 8.3 bar (110 psi – 120 psi) while gas is flowing.

   Never use more than the maximum gas pressure of 9.3 bar (135 psi).
2. Examine the inlet gas supply hose for signs of leaks or blockages.
3. Examine the gas filtration system for signs of contaminants that are possibly causing interference with system performance.

There is a problem with the torch lead

1. Make sure that the torch lead is straight and is not twisted.
2. Replace the torch lead if it has damage.

An extension cord is not sufficient

Operate the plasma power supply without using an extension cord. If you must use an extension cord, use a heavy conductor cord of the shortest possible length.

The power PCB is defective

- Do Troubleshooting for input voltage faults on page 78.

The power switch is ON, but the power LED is off

The power switch is set to ON (**I**), but the Power ON LED is off. The voltage to the control circuits is not sufficient, or a power component has a short circuit.

Voltage to the system is missing or incorrect

1. Make sure that the power cord is connected correctly to the power outlet or line-disconnect switch box.
2. Make sure that the power is on at the main power panel or at the line-disconnect switch box.
3. Make sure that the circuit breaker did not open (trip).
4. Make sure that the line voltage is not too low (more than 15% below the rated voltage).

The power switch or power PCB is defective

Do Troubleshooting for input voltage faults on page 78 to do a check of the incoming voltage, the power switch, and the power PCB.

The solenoid valve is defective

Do Troubleshooting for solenoid valve pressure sensor faults (2-11-n) on page 104.

The fan is defective

1. Set the power switch to OFF (**O**), and disconnect the power cord from the power source.
2. Remove the plasma power supply handle and cover.
3. Remove the component barrier.
4. Clean the fan assembly.

5. Make sure that the J7 fan connector is fully connected to the power PCB.
6. Make sure that the fan wires are not pinched and do not have damage.
7. Remove the fan and fan shroud from the plasma power supply.
8. Use pin 1 (red) and pin 4 (black) on the J7 fan connector, and connect the fan to an external 12 V or 24 V power source.

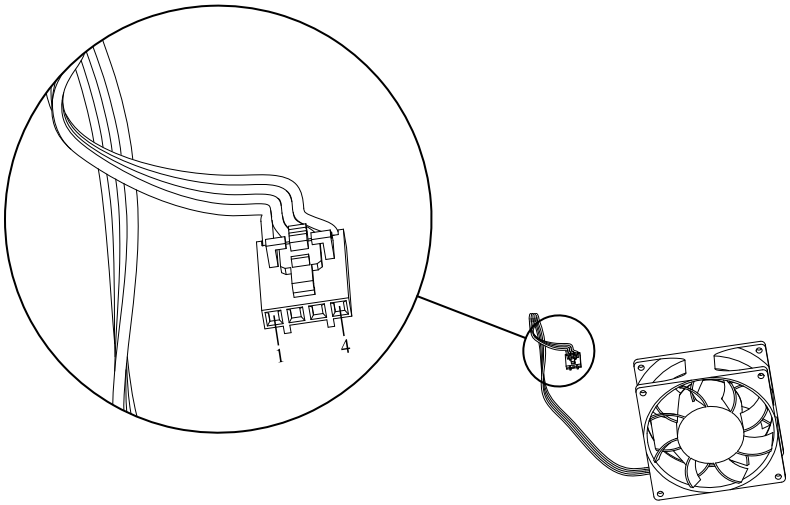

9. Does the fan operate correctly when it is connected to an external power source?

If yes...	Replace the power PCB.
If no...	Replace the fan.

The power LED is on, but no gas flows when you fire the torch

The Power ON LED is on. No fault LED or fault code shows on the front panel, but no gas flows when you fire the torch. The start signal is not getting to the control PCB.

The torch, torch lead, power PCB, or machine interface connection has damage

1. Examine the torch and torch lead for damage.
2. Replace the torch or torch lead if necessary.
3. Do Troubleshooting for start signal faults on page 72.

   The problem can be with the power PCB or with the machine interface connection between the plasma power supply and the Computer Numerical Control (CNC) (if applicable).

The arc does not transfer to the workpiece

The plasma arc does not transfer to the workpiece. The continuity between the work lead and the workpiece is unsatisfactory.

The work lead connection is not satisfactory

1. If possible, move the work clamp closer to the area of the workpiece you are cutting.
2. Clean the area where the work clamp comes into contact with the workpiece or cutting table, and remove rust, paint, or other residue.
3. Make sure that the cutting table is correctly grounded and has good contact with the workpiece.
4. Examine the work lead for a loose connection at the plasma power supply and at the work clamp.
5. Examine the work clamp, and repair or replace the clamp if necessary.
6. Examine the work lead, and repair or replace the lead if necessary.

The pierce height is too high

Decrease the cut height.

Gas flows from the torch when you set the power switch to ON

Gas flows from the torch when you set the power switch to ON (**I**), but you did not fire the torch. The incoming gas pressure is too high, or the system is not adjusting the gas pressure correctly.

The incoming gas pressure is too high

The gas pressure from the air compressor or cylinder is too high.

- **Never use more than the maximum gas pressure of 9.3 bar (135 psi).**

The solenoid valve or power PCB is defective

1. Do Troubleshooting for missing gas input faults on page 57.
2. Do Troubleshooting for solenoid valve pressure sensor faults (2-11-n) on page 104.

Gas flows when you fire the torch, but there is no plasma arc

Gas flows when you fire the torch, but there is no plasma arc, or you lose the arc quickly. The Hypertherm cartridge or torch lead are worn or have damage, there is a problem with the gas flow or gas quality, or the input power is not sufficient.

There is a problem with the Hypertherm cartridge, torch, or torch lead

1. Make sure that the Hypertherm cartridge is not too loose or too tight.
2. Examine the Hypertherm cartridge for wear or damage.
3. Replace it if it is worn or has damage.
4. Do Troubleshooting for TSO and TSC faults on page 61 to identify if the problem is with the Hypertherm cartridge, the torch, or the torch lead.

   A higher rate of TSO and TSC faults is typical as a Hypertherm cartridge gets near end-of-life.

The gas flow is too high or too low

1. For optimum system performance, make sure that the inlet gas pressure stays between 7.6 bar – 8.3 bar (110 psi – 120 psi) while gas is flowing.
2. **Never use more than the maximum gas pressure of 9.3 bar (135 psi).**
3. Examine the gas supply line, and repair gas leaks and blockages as necessary.
4. Adjust the gas pressure on the plasma power supply manually.

The gas quality is unsatisfactory

- The filter element in the air filter is dirty.
- Oil, moisture, or other contaminants are in the gas supply line.

1. Replace the air filter element.
2. Add additional, external filtration that is applicable for the work environment.

   Refer to the *Powermax45 SYNC Operator Manual (811470)*.
3. Flush the gas supply line with nitrogen to remove oil and moisture.

The input power is not sufficient

The electrical supply installation for one or more of the following is not sufficient:

- Circuit breaker or fuse
- Supply wire
- Extension cord

Refer to the installation specifications in the *Powermax45 SYNC Operator Manual (811470)*.

There is a voltage imbalance on the capacitors

The bulk capacitors on the power PCB are defective.

1. Do Troubleshooting for input voltage faults on page 78.
2. If the voltage across the bulk capacitors is not balanced, replace the power PCB.

The plasma arc goes out while you are cutting, or the torch will intermittently not fire

The work lead is defective or the work lead connection is insufficient for some reason

1. If possible, move the work clamp closer to the area of the workpiece you are cutting.
2. Clean the area where the work clamp comes into contact with the workpiece or cutting table, and remove rust, paint, or other residue.
3. Make sure that the cutting table is correctly grounded and has good contact with the workpiece.
4. Examine the work lead for a loose connection at the plasma power supply and at the work clamp.
5. Examine the work clamp, and repair or replace the clamp if necessary.
6. Examine the work lead, and repair or replace the lead if necessary.

The fan is defective

1. Do Corrective action for the power PCB voltage on page 82 to find if the voltage for the fan is in the correct range.

2. Clean the fan assembly.
3. Make sure that the J7 fan connector is fully connected to the power PCB.
4. Make sure that the fan wires are not pinched and do not have damage.
5. Remove the fan and fan shroud from the plasma power supply.
6. Use pin 1 (red) and pin 4 (black) on the J7 fan connector, and connect the fan to an external 12 V or 24 V power source.

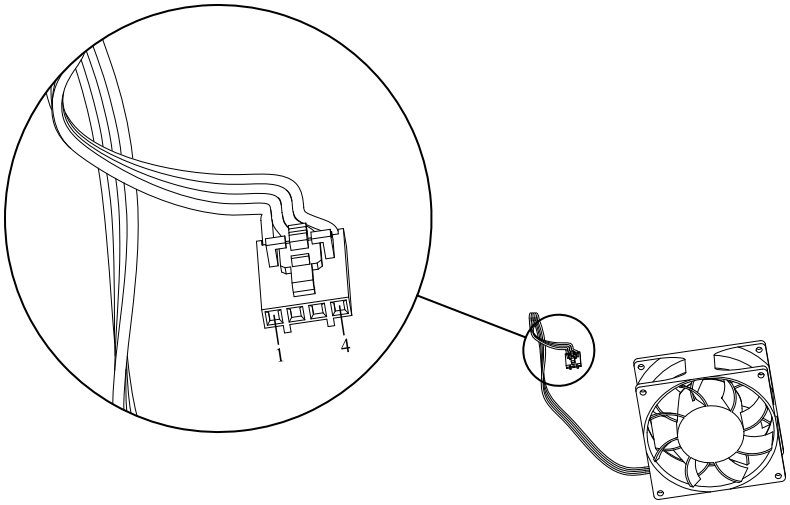

7. Does the fan operate correctly when it is connected to an external power source?

If yes...	Replace the power PCB.
If no...	Replace the fan.

The plasma arc stopped while cutting, but starts when you fire the torch again

There is a problem with the Hypertherm cartridge, the cut height, the air filter element, or the input gas pressure.

The Hypertherm cartridge is worn or has damage

- Replace the Hypertherm cartridge.

The arc is stretched too far

1. Decrease the length of the arc stretch when you cut.

2. When you cut with a hand torch, drag the torch on the workpiece when possible.

The filter element in the air filter is dirty

- Replace the air filter element.

The gas pressure is too low or too high

1. If you manually adjusted the gas pressure before the problem occurred, set the gas pressure back to the default setting.
2. For optimum system performance, make sure that the inlet gas pressure stays between 7.6 bar – 8.3 bar (110 psi – 120 psi) while gas is flowing.

   Never use more than the maximum gas pressure of 9.3 bar (135 psi).
3. Adjust the gas pressure on the plasma power supply manually, as necessary.
4. Make sure that the incoming gas supply hose has an internal diameter that is ≥ 9.5 mm (3/8 inch).
5. Examine the gas filtration system for signs of contaminants that are possibly causing interference with system performance.

The plasma arc makes sputtering and hissing sounds

There is a problem with the air filter element, or it is necessary to clean the input gas supply. There can also be a problem with the Hypertherm cartridge.

The air filter element is dirty

- Replace the air filter element that is in the filter bowl at the rear of the plasma power supply.

There is moisture in the gas supply line

1. Examine the gas supply line moisture.
2. Clean or replace external filtration components as necessary.
3. Flush the gas supply line with nitrogen to remove oil and moisture.
4. If necessary, add additional, external filtration that is applicable for the work environment.

There is a problem with the cartridge

1. Make sure that the Hypertherm cartridge is not too loose or too tight on the torch.
2. Examine the Hypertherm cartridge for wear or damage, and replace it if necessary.

The system is not cutting at full cutting power, and the plasma arc does not time out after 5 seconds

The system is not connected to ground sufficiently. The output from the plasma power supply is too low.

The work lead connection is not satisfactory

1. If possible, move the work clamp closer to the area of the workpiece you are cutting.
2. Clean the area where the work clamp comes into contact with the workpiece or cutting table, and remove rust, paint, or other residue.
3. Make sure that the cutting table is correctly grounded and has good contact with the workpiece.
4. Examine the work lead for a loose connection at the plasma power supply and at the work clamp.
5. Examine the work clamp, and repair or replace the clamp if necessary.
6. Examine the work lead, and repair or replace the lead if necessary.

The work lead has damage

Measure the resistance across the work lead at J23 on the power PCB. If the resistance is greater than 5 ohms (Ω), repair or replace the work lead.

The output current is set too low

Use the adjustment knob to increase the output current (A) as necessary.

The power PCB is defective

It is possible that a sensor on the power PCB is defective, or a component on the power PCB is short-circuited.

- Replace the power PCB if necessary.

Nothing shows on the 2-digit display, the power switch is set to ON (I), and the Power ON LED is on

Voltage to the control circuits is not sufficient, or a power component has a short circuit.

There is a problem with the voltage or the power source

- Voltage to the plasma power supply is incorrect.
- Voltage to the plasma power supply is missing
- There is a blown fuse

1. Make sure that the power cord is connected correctly to the power outlet or line-disconnect switch box
2. Make sure that the power is on at the main power panel or at the line-disconnect switch box.
3. Make sure that the circuit breaker did not open (trip).
4. Make sure that the line voltage is not too low (more than 15% below the rated voltage).

   Refer to the electrical specifications in the *Powermax45 SYNC Operator Manual (811470)*.
5. Examine the fuses in the line-disconnect switch box, and replace bad fuses as necessary.

The fan has a short circuit

1. Set the power switch to OFF (**O**), and disconnect the power cord from the power source.
2. Remove the plasma power supply handle and cover.
3. Remove the component barrier.
4. Disconnect the J7 fan connector from the power PCB.
5. Set the plasma power supply to ON (**I**).
6. Does the 2-digit display come on?

If yes...	Replace the fan.
If no...	Do Troubleshooting for fan faults (3-10-n) on page 111.

The system changes the gas pressure after you set it manually

The plasma power supply will override manual gas mode under some conditions.

One of these conditions caused the gas pressure to be changed

- You installed a different type of Hypertherm cartridge.
- You adjusted the gas pressure before you unlocked the torch.
- You enabled "marking mode" by adjusting the amperage to be less than 20 A with a FineCut® Hypertherm cartridge installed on the torch.

1. Make sure that the torch-lock switch is in the green "ready to fire" position.
2. Set the amperage to be more than 20 A.
3. Manually adjust the gas pressure as necessary.

   The selected cut mode LED on the front panel flashes while the gas pressure is manually set.

The system changes the output current (A) or the operating mode after you set them

You selected the system setting while the torch was locked

The system does not keep changes to the output current (A) or operating mode while the torch-lock switch is in the yellow lock position or while there is an 0-50-n "Hypertherm cartridge off" fault condition.

When you set the torch-lock switch to the green "ready to fire" position, the system automatically sets the amperage and operating mode to match the type of Hypertherm cartridge installed on the torch.



For more information on the 0-50-n fault condition, refer to Troubleshooting for torch-lock switch faults (0-50-n) on page 90.

- Set the torch-lock switch to the green "ready to fire" position **before** you adjust the amperage or operating mode.

The plasma power supply stops (1-phase models)

The 200 V – 240 V CSA/CE/CCC 1-phase plasma power supplies have over voltage protection on the power switch that is supplied by a mechanical trip coil. If voltage from the incoming circuit is more than the maximum voltage, the trip coil sets the power switch to OFF (**O**).

The system energized the trip coil, or the power switch is defective

If the plasma power supply stops operating and goes OFF on its own, do these steps to identify if the power switch must be replaced.

1. Set the power switch to OFF (**O**), and disconnect the power cord from the power source.
2. Set the power switch to ON (**I**).

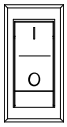

3. Does the power switch stay in position?

If yes...	The trip-coil mechanism is operating correctly.
If no...	Replace the power switch. Refer to Remove the power switch (1-phase) on page 153. The trip coil connects to the component side of the power PCB at J10.

Chapter 3: Troubleshooting for fault codes

Fault icons and fault codes

The Powermax45 SYNC power supply shows faults using a combination of fault icons and fault code numbers. Some faults are shown by the icons only, others are shown by the icons and a fault code number.

Sometimes the icons do not indicate a fault condition. For example, if the Cut Mode icon or the Gouge Mode icons flash, this indicates that the gas pressure has been manually adjusted. After you reset the gas pressure to its default setting, the icons stop flashing.

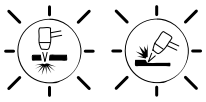

Fault icons

Each fault icon can help identify what the caused the problem.



Service

This icon shows when the transfer (XFR) signal on the machine interface is closed, or when the plasma power supply receives a START signal from a CNC.



Temperature

This icon identifies fault conditions in which the plasma power supply is outside the range of permitted operating temperatures.



Torch Cap sensor

This icon identifies fault conditions in which the Hypertherm cartridge is loose, incorrectly installed, or missing.

This icon also identifies when the SmartSYNC® torch is in the yellow lock (X) position.



Fault

This icon identifies faults that cause the plasma power supply to stop cutting.

This icon also comes on when the torch is set to the yellow lock (X) position.



Gas

This icon identifies fault conditions in which the gas supply is disconnected from the plasma power supply or there is a problem with the gas supply.



Power ON

When flashing, this icon identifies a problem with the AC input power.

Fault codes

When a fault occurs with the plasma power supply or the torch, a fault icon, or a fault icon and a fault code, will show on the 2-digit display.

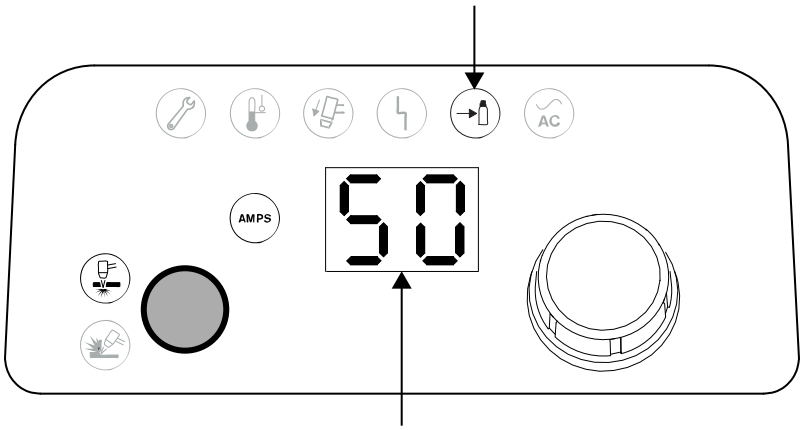

Fault codes give additional information when necessary to make the source of the problem easier to identify.

The codes are divided into three segments (**N-nn-n**), and each segment shows on the 2-digit display in sequence. This is an example of the 0-50-2 fault code:



The status LED on the SmartSYNC hand torch also shows the fault status.

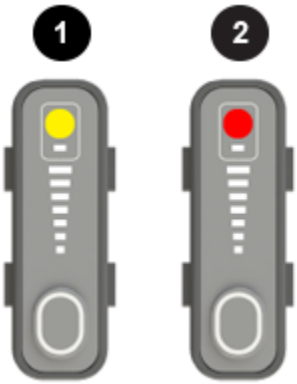

1 **Yellow** = a 0-nn-n fault code, or the torch is locked.

2 **Red** = a 1-nn-n, 2-nn-n, or 3-nn-n fault code.

Operational faults

An operational fault code can be for a notification or for a condition that stops the cutting process. Hypertherm recommends that you do the steps for all faults that occur. Troubleshooting all faults helps you to get optimal cut quality and consumable life.

A label with descriptions for many common fault codes is included with the system. Put the label on the plasma power supply or near your work area for reference.

Fault code	Fault LEDs	Torch LED	Description
None	 Flashes	 Yellow	• The current from the incoming power line is unstable. • Stop power to the system and correct the line resonance problem before continuing. • Refer to Troubleshooting for AC input power that is not stable on page 54.
None	 ON  ON	 Yellow	• The gas pressure is too low. • Refer to Troubleshooting for low gas pressure faults on page 55.
None	 Flashes quickly	 Yellow	• There is no gas supply input. • Refer to Troubleshooting for missing gas input faults on page 57.
None	 Flashes slowly	 Yellow	• There is a TSO condition. • Refer to Troubleshooting for TSO and TSC faults on page 61.
None	 Flashes quickly		• There is a TSC condition. • Refer to Troubleshooting for TSO and TSC faults on page 61.

Fault code	Fault LEDs	Torch LED	Description
None	 ON  ON	 Yellow	• The internal temperature of the plasma power supply is too hot or too cold. • Refer to Troubleshooting for temperature-related faults on page 67.
None	 ON	 Yellow	• The Hypertherm cartridge was off, the torch was disconnected, or the torch was in the yellow lock (X) position during a restart. • Refer to Troubleshooting for when the Hypertherm cartridge or torch is not ready to cut on page 68.
None	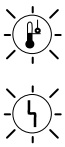 Flash alternately	 Yellow	• The plasma power supply was receiving a signal to start cutting at the same time that the power switch was set to ON (**I**). • Refer to Troubleshooting for start signal faults on page 72.
None	 Flashes  ON	 Yellow	• An AC input voltage phase loss occurred. • This is applicable only for 3-phase models. • Refer to Troubleshooting for input voltage faults on page 78.
None	 Flashes	 Yellow	• The AC input voltage is too low (>10% less than the rated voltage for 1-phase models or >15% less than the rated voltage for 3-phase models). • The AC input voltage is too high (>10% more than the rated voltage for 1-phase models or >15% more than the rated voltage for 3-phase models). • Refer to Troubleshooting for input voltage faults on page 78.

Fault code	Fault LEDs	Torch LED	Description
0-11-0	AC ON	CNC use only	• The remote control operating mode is incorrect or not permitted for the installed Hypertherm cartridge. • The permitted operating modes for Hypertherm cutting cartridges is 1 (Cut mode). • The permitted operating mode for a Hypertherm gouging cartridge is 2 (Gouge mode). • Refer to Troubleshooting for remote controller faults (0-11-n) on page 84.
0-11-1			• The remote control output current (A) is incorrect or not permitted for the installed Hypertherm cartridge. • The permitted values relate to the minimum and maximum output current (A) for the plasma power supply and the installed Hypertherm cartridge. • Refer to Troubleshooting for remote controller faults (0-11-n) on page 84.
0-11-2			• The remote control gas pressure is incorrect or not permitted. • The permitted gas pressure relates to the selected process and operating mode, and to the installed torch, torch lead, and Hypertherm cartridge. • Refer to Troubleshooting for remote controller faults (0-11-n) on page 84.
0-12-1	AC ON	CNC use only	• The output gas pressure is too low. • Refer to Troubleshooting for incorrect output gas pressure conditions (0-12-n) on page 86.
0-12-2			• The output gas pressure is too high. • Refer to Troubleshooting for incorrect output gas pressure conditions (0-12-n) on page 86.
0-12-3			• The output gas pressure is not stable. • Refer to Troubleshooting for incorrect output gas pressure conditions (0-12-n) on page 86.
0-14-0	ON	 Flashes yellow	• There is a problem with the Hypertherm cartridge installation. • Refer to Troubleshooting for Hypertherm cartridge installation faults (0-14-n) on page 87.
0-14-1	AC		• The Hypertherm cartridge is not recognized. • Refer to Troubleshooting for Hypertherm cartridge installation faults (0-14-n) on page 87.

Fault code	Fault LEDs	Torch LED	Description
0-19-9	Only displays on a CNC or when you use the Hypertherm SYNC Cartridge Reader (528083) and app to read data from a Hypertherm cartridge.		• The input power stopped. Or, power PCB hardware protection occurred for components in the plasma power supply. • Refer to Troubleshooting for PCB hardware protection faults (0-19-9) on page 88.
0-40-5	 ON	 Yellow	• The duty cycle for the plasma power supply was exceeded. • Refer to Troubleshooting for duty cycle faults (0-40-5) on page 89.
0-50-1	 ON	 Yellow	• The torch-lock switch is set to the yellow lock (**X**) position. • Refer to Troubleshooting for torch-lock switch faults (0-50-n) on page 90.
0-50-2			• The torch-lock switch is set to the green "ready to fire" position, but the torch is not prepared to fire. • Refer to Troubleshooting for torch-lock switch faults (0-50-n) on page 90.
0-50-3	 ON		• The plasma power supply is reading data from the Hypertherm cartridge. • Refer to Troubleshooting for torch-lock switch faults (0-50-n) on page 90.

Fault code	Fault LEDs	Torch LED	Description
0-52-0	 ON  ON	 None	• The torch is not connected. • Refer to Troubleshooting for torch connection faults (0-52-0) on page 92.
0-98-1	 ON	 Yellow	• A Radio Frequency (RF) communication failure occurred between the Hypertherm cartridge and the torch. • Refer to Troubleshooting for an RF communication fault (0-98-1) on page 93.
0-98-2	 ON	 Flashes yellow	• A communication failure occurred between the torch and the plasma power supply. • Refer to Troubleshooting for a plasma power supply or torch communication fault (0-98-2) on page 96.

Internal component faults (1-nn-n, 2-nn-n, 3-nn-n)

Fault codes in the 1-nn-n, 2-nn-n, and 3-nn-n formats identify possible damage to components inside the plasma power supply.

Fault code	Fault LED	Torch LED	Description
1-00-0	ON	Red	• A Digital Signal Processor (DSP) fault occurred. • Refer to Troubleshooting for DSP and I/O faults (1-nn-n) on page 101.
1-20-0			• An Input/Output (I/O) fault occurred. • Refer to Troubleshooting for DSP and I/O faults (1-nn-n) on page 101.
2-00-0	ON	Red	• An Analog-to-Digital Converter (ADC) value is out of range. • Refer to Troubleshooting for an analog-to-digital converter fault (2-00-0) on page 102.
2-10-0	ON	Red	• An inverter module temperature sensor is open. • Refer to Troubleshooting for inverter module temperature sensor faults (2-10-n) on page 103.
2-10-1			• An inverter module temperature sensor short-circuited. • Refer to Troubleshooting for inverter module temperature sensor faults (2-10-n) on page 103.
2-11-0	ON	Red	• The pressure sensor is open. • Refer to Troubleshooting for solenoid valve pressure sensor faults (2-11-n) on page 104.
2-11-1			• The pressure sensor short-circuited. • Refer to Troubleshooting for solenoid valve pressure sensor faults (2-11-n) on page 104.
3-00-0	ON	Red	• The Direct Current (DC) bus voltage (VBUS) is out of range. • Refer to Troubleshooting for VBUS faults (3-00-0) on page 107.
3-10-0	ON	Red	• The fan speed is less than the minimum speed. • Refer to Troubleshooting for fan faults (3-10-n) on page 111.
3-10-1			• The fan is not operating correctly. • Refer to Troubleshooting for fan faults (3-10-n) on page 111.

Fault code	Fault LED	Torch LED	Description
3-11-0	ON	 Red	• A Power Factor Correction (PFC) module temperature sensor is open. • Refer to Troubleshooting for PFC module temperature sensor faults (3-11-n) on page 113.
3-11-1			• A PFC module temperature sensor is short-circuited. • Refer to Troubleshooting for PFC module temperature sensor faults (3-11-n) on page 113.
3-11-2			• No communication with the temperature sensor circuit. • Refer to Troubleshooting for PFC module temperature sensor faults (3-11-n) on page 113.
3-51-1	ON	 Red	• An inverter saturation fault occurred (the inverter is over current). • Refer to Troubleshooting for inverter IGBT faults (3-51-1, 3-52-0) on page 113.
3-52-0			• An inverter shoot-through fault occurred. • Refer to Troubleshooting for inverter IGBT faults (3-51-1, 3-52-0) on page 113.
3-60-0	ON	 Red	• A power PCB fault occurred. • Refer to Troubleshooting for a power PCB fault (3-60-0) on page 114.

Troubleshooting procedures for fault LEDs and 0-nn-n fault codes

Troubleshooting for AC input power that is not stable

The Power ON LED can flash to identify when the AC input power is not stable and a system shutdown is necessary.

Fault codes and fault LEDs

Fault code	Fault LEDs	Torch LED	Description	Stops the system from operating?
None	 Flashes	 Yellow	The AC input power is not stable.	No, but the system can operate at a decreased capacity in some conditions.
			The current from the incoming power line is unstable. Stop power to the system and correct the line resonance problem before continuing.	Yes

Corrective action for AC input power that is not stable

1. If possible, connect the system to a different AC power source.
2. Make sure that the plasma power supply is not being used on a phase converter.
3. If applicable, disconnect the system from generator power.

Troubleshooting for low gas pressure faults

When the Gas Pressure fault LED and the System Fault LED both illuminate while the system is ON, the gas pressure is less than the minimum pressure for the selected process, operating mode, torch, lead length, and Hypertherm cartridge type.

Fault codes and fault LEDs

Fault code	Fault LEDs	Torch LED	Description	Stops the system from operating?
None	 ON  ON	 Flashes yellow	The gas pressure is too low.	No

Corrective action – gas supply checks

1. Examine all the input gas supply connections, and make sure that there are no leaks or loose connections.
2. Make sure that the internal diameter of the incoming gas supply hose is ≥ 9.5 mm (3/8 inch).
3. Make sure that the gas inlet fitting at the rear of the plasma power supply is connected correctly and is fully tightened.
   - ☐ CSA models: Tighten the 1/4 NPT fitting to 11.3 N m (100 lbf in).
   - ☐ CE/CCC models: Tighten the G-1/4 BSPP adapter to 10.2 N m (90 lbf in).
4. Manually adjust the gas pressure on the plasma power supply, and do a quick restart.
5. Examine the air filter at the rear of the plasma power supply:
   a. Replace the air filter element if it is contaminated.
   b. Clean the air filter bowl, or replace it if it has damage.
6. Start a gas test, and let the gas flow for 3 – 5 minutes to find if the gas pressure remains stable.

   Refer to Do a gas test on page 23.
7. If the actual pressure is different from the set pressure by more than 0.2 bar (3 psi) during the gas test, continue with the next procedure.

Corrective action – more external checks

1. Set the power switch to OFF (**O**), and disconnect the power cord from the power source.
2. Examine the Hypertherm cartridge for wear and damage, and replace it if necessary.
3. Make sure that the torch lead is not kinked or twisted, and replace it if necessary.
4. Make sure that the torch lead has a good connection to the plasma power supply.
5. Examine the torch lead connector and the quick-disconnect receptacle for possible damage to the pins or wires, and replace them if necessary.
6. **Optional:**

   If other devices use the same gas supply, make sure that those devices do not prevent sufficient gas pressure to the plasma power supply.
7. **Optional:**

   Clean or repair external filters, if necessary.
8. **Optional:**

If the plasma power supply is connected to an air compressor, make sure that the compressor is the correct size for this system.

9. To find if electrical interference is preventing the solenoid valve from operating correctly, move the plasma power supply to another location.
10. If you continue to get the low gas pressure fault, continue with the next procedure.

Corrective action – internal checks

1. Set the power switch to OFF (**O**), and disconnect the power cord from the power source.
2. Remove the plasma power supply handle and cover.
3. From the fan side of the plasma power supply, make sure that there are no leaks or loose connections at the connection points on the gas supply line.
4. Examine the two gas hoses that connect to the solenoid valve, and replace them if they have kinks or other damage.
5. Examine the rear of the quick-disconnect receptacle, and replace the receptacle if necessary.
    - ☐ Is the receptacle fully tightened in the front panel?
    - ☐ Are the receptacle wires pinched or twisted, or do they have other damage?
6. Make sure that the solenoid valve wire connections are not loose.

Verification

1. After you have completed all of these troubleshooting steps, do a cold restart.
2. Fire the torch.
3. If the Gas Pressure fault LED and System Fault LED continue to illuminate, replace the solenoid valve.

Troubleshooting for missing gas input faults

The Gas Pressure fault LED flashes quickly when there is no gas supply input to the plasma power supply.

Fault codes and fault LEDs

Fault code	Fault LEDs	Torch LED	Description	Stops the system from operating?
None	 Flashes quickly	 Yellow	There is no gas supply input.	Yes. The fault code goes away when you connect the gas supply to the plasma power supply unless there is a block-age in the gas line.

Corrective action for the input gas supply

1. Make sure that the input gas supply is connected correctly to the plasma power supply.
2. Examine the input gas supply line, and make sure that there are no gas leaks, loose connections, or blockages.
3. Do a quick restart.

Corrective action for the solenoid valve and power PCB

1. Set the power switch to OFF (**O**), disconnect the power cord from the power source, and disconnect the gas supply.
2. Remove the plasma power supply handle and cover.
3. Set the power switch to ON (**I**).
4. With the gas disconnected and the plasma power supply ON, can you hear the solenoid valve make a click?

If yes...	1. Examine the gas hoses that connect to the solenoid valve. 2. Replace the hoses if they have kinks or other damage. 3. Reconnect the input gas supply to the plasma power supply. 4. Set the power switch to ON (**I**). 5. Fire the torch.
If no...	Continue with the next step.

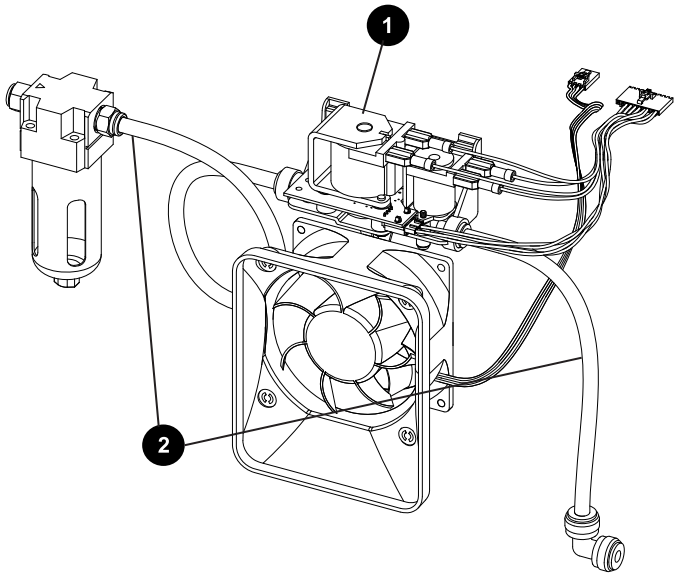

1 Solenoid valve **2** Gas hoses

5. Measure the voltage between pin 1 and pin 7 at J8 on the power PCB.
6. Is the voltage approximately 48 VDC?

If yes...	Continue with the next step.
If no...	Continue with step step 11 on page 60.

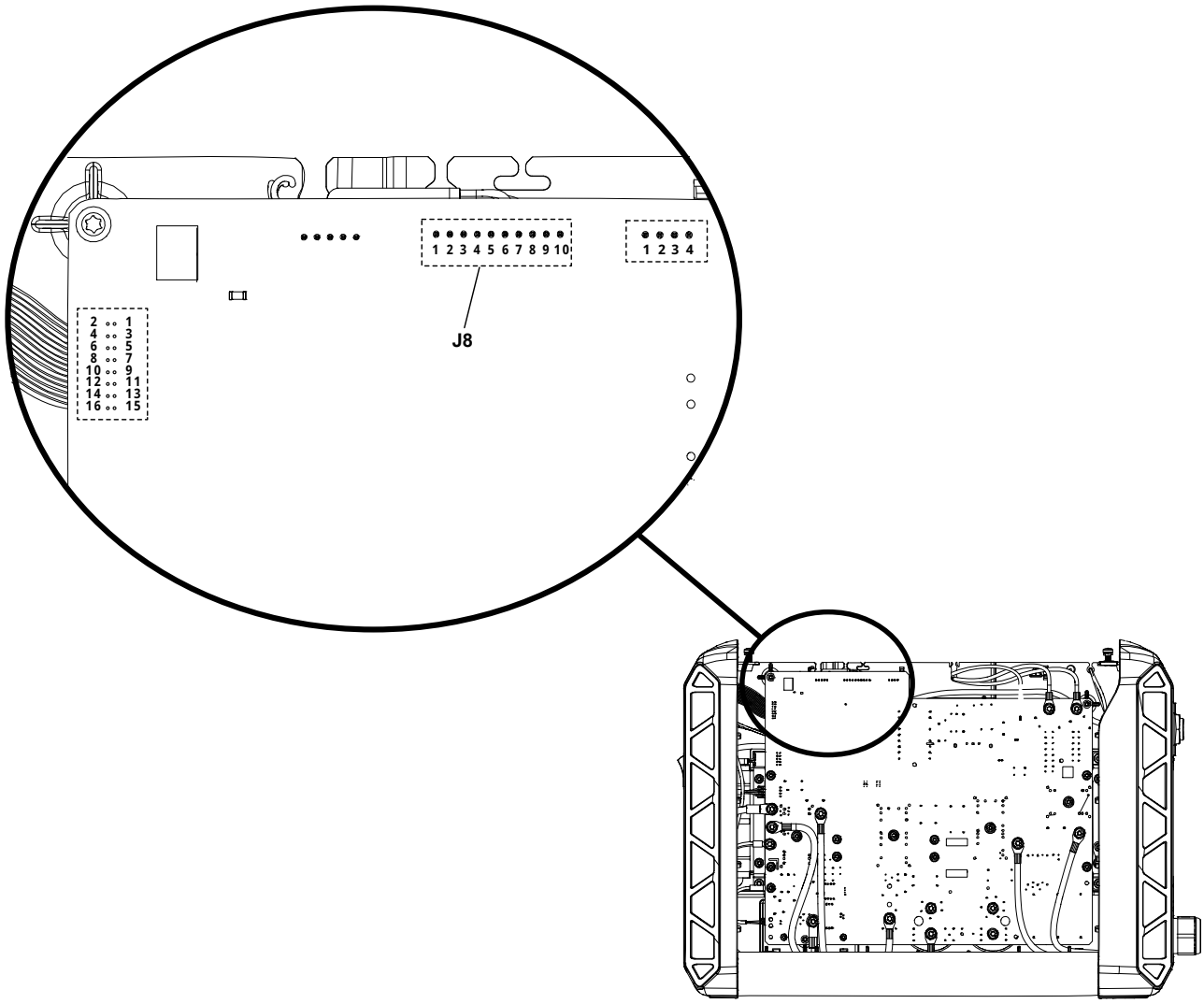

7. Put the test leads on pin 7 and pin 8 at J8.
8. Do a cold restart.
9. Hold the test leads in position for approximately 3 – 5 seconds after the restart.
10. Was there a large increase in voltage after you did the restart?

If yes...	Replace the solenoid valve.
If no...	Replace the power PCB.

11. Disconnect the J8 connector from the power PCB.
12. Measure the voltage again between pin 1 and pin 7 at J8.
13. Is the voltage approximately 48 VDC?

If yes...	Continue with the next step.
If no...	Replace the power PCB.

14. Do a resistance check to make sure that the solenoid valve is defective:
    a. Measure the resistance between pin 7 and pin 8 on the J8 connector.
    b. If the resistance is less than 44 ohms (Ω), ±5 ohms (Ω), replace the solenoid valve.

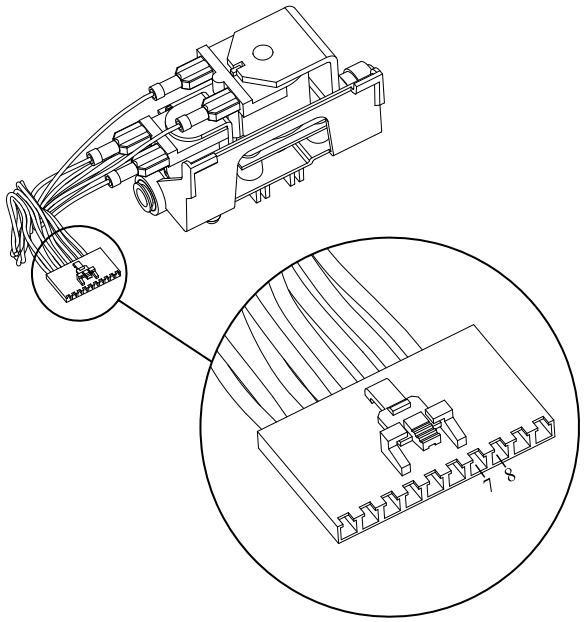

Troubleshooting for TSO and TSC faults

A flashing Torch Cap fault LED identifies either a TSO or a TSC condition.

- **TSO:** The nozzle and electrode components inside the Hypertherm cartridge are not touching after a Start signal is received.
- **TSC:** The nozzle and electrode components inside the Hypertherm cartridge will not disconnect from each other after a Start signal is received.

Fault codes and fault LEDs

Fault code	Fault LEDs	Torch LED	Description	Stops the system from operating?
None	 Flashes slowly	 Yellow	There is a TSO condition.	Yes. These faults stop the torch from firing a plasma arc. In some conditions, you can fire the torch again and continue to cut.
None	 Flashes quickly		There is a TSC condition.	

Corrective action for the Hypertherm cartridge

1. If the Hypertherm cartridge became loose or was removed while the plasma power supply was ON and the torch-lock switch was set to the green "ready to fire" position, set the power switch on the plasma power supply to OFF (**O**), correct the problem, and set the power switch to ON (**I**) to remove the fault.
2. Examine the Hypertherm cartridge to make sure that it is not worn and does not have damage.
3. Are you using a hand torch or a mechanized torch?

Hand torch	1. Move the torch-lock switch to the yellow lock position, then move the torch-lock switch to the green "ready to fire" position. 2. Fire the torch one time to get the warning puffs of air. This can clean away unwanted material that has collected around the tip of the Hypertherm cartridge.
Mechanized torch	Continue with the next step.

4. Remove the Hypertherm cartridge and carefully shake it to remove unwanted material that has collected inside the Hypertherm cartridge.
5. Install a new Hypertherm cartridge.

Corrective action for TSO faults that occur during postflow

A Start signal during postflow causes the remaining air pressure in the torch lead to quickly decrease. If the pressure does not decrease quickly enough, the electrode will possibly not return to its closed position in time to form the pilot arc. A TSO fault occurs.

After each step, try to fire the torch again.

1. Move the torch lock switch to the LOCK position and then back to the "ready to fire" position to reset the torch.
2. Try a different Hypertherm cartridge.
3. Do an inspection of the torch lead.
   - ☐ If the torch lead is installed in a track, remove the torch lead from the track.
   - ☐ Does the torch lead have any kinks or bends? Do not bend the torch lead around a radius that is less than the minimum bend radius of 76 mm (3.0 inches).
   - ☐ Are there cable ties around the torch lead that are too tight?
   - ☐ Are there any signs of a gas leak?

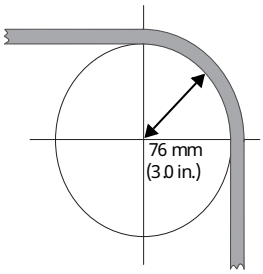

4. Do a gas test to make sure that the inlet gas pressure is sufficient.
5. If possible, do a continuity check on the torch lead with a Hypertherm cartridge installed.
   a. Make sure that a Hypertherm cartridge is installed on the torch and that the torch is not connected to the plasma power supply.

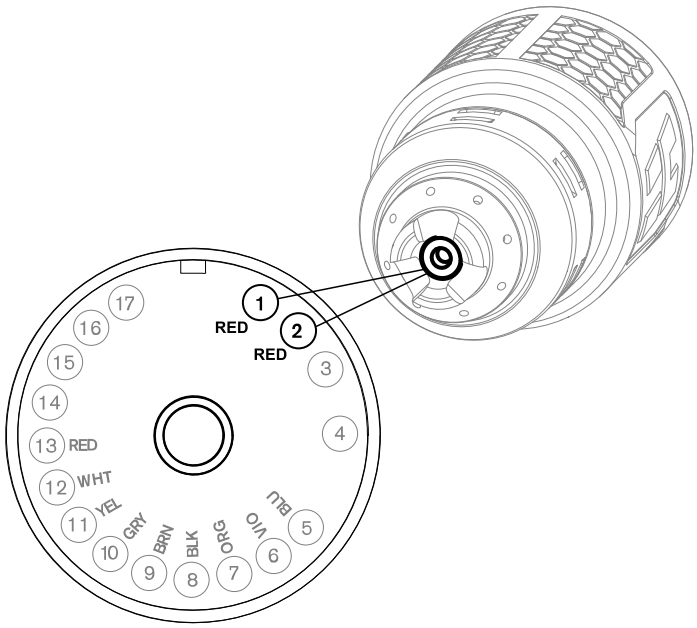

b. Do a check for continuity between pin 1 in the torch connector and the nozzle on the Hypertherm cartridge.

c. Do a check for continuity between pin 2 in the torch connector and the nozzle on the Hypertherm cartridge.

d. Is there continuity on both pins?

If yes...	There could be a problem with the plasma power supply instead of the torch.
If no...	It is possible that a new torch lead is necessary.

Corrective action for the torch

1. Press-and-hold the Mode button for approximately 5 seconds to start a gas test, and keep the system in gas test mode for 2 minutes.
2. Monitor the gas pressure while the gas is flowing.

   If the pressure decreases gradually, look for the following conditions that can cause the pressure to decrease:

   - ☐ Does the torch lead have any kinks?
   - ☐ Are there cable ties around the torch lead that are too tight?
   - ☐ Is there heavy equipment putting too much weight on part of the torch lead?
   - ☐ Are there signs of damage to the torch lead that can cause gas pressure leaks?
3. Connect a different torch to the plasma power supply that is known to operate correctly.

   Does the Torch Cap fault go away?

   - ☐ If yes, continue with the next step.
   - ☐ If no, continue with Corrective action for the plasma power supply on page 65.
4. Do a check for continuity on the original torch:

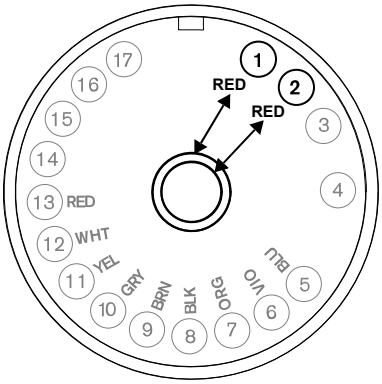

a. Make sure that a Hypertherm cartridge is installed on the torch and that the torch is **not** connected to the plasma power supply.

b. Do a check for continuity between pin 1 in the torch connector and the brass in the center of the connector.

c. Do a check for continuity between pin 2 in the torch connector and the brass in the center of the connector.

5. Is there continuity on both pins?

If yes...	The problem can be with the plasma power supply, not the torch. Continue with Corrective action for the plasma power supply on page 65.
If no...	Replace the torch lead.

Corrective action for the plasma power supply

1. Set the power switch to OFF (**O**), and disconnect the power cord from the power source.

⚠ WARNING



ELECTRIC SHOCK CAN KILL

The plasma power supply contains dangerous electric voltages that can seriously injure or kill you.



Use extreme caution if you do service or maintenance work on a plasma power supply when it is connected to an electric power source and the outer cover or panels are removed.

2. Remove the plasma power supply handle and cover.

3. Remove the component barrier.
4. Measure the resistance between the red wire group and the white wire from the torch receptacle.

   These wires have the labels RED and WHT on the power PCB.

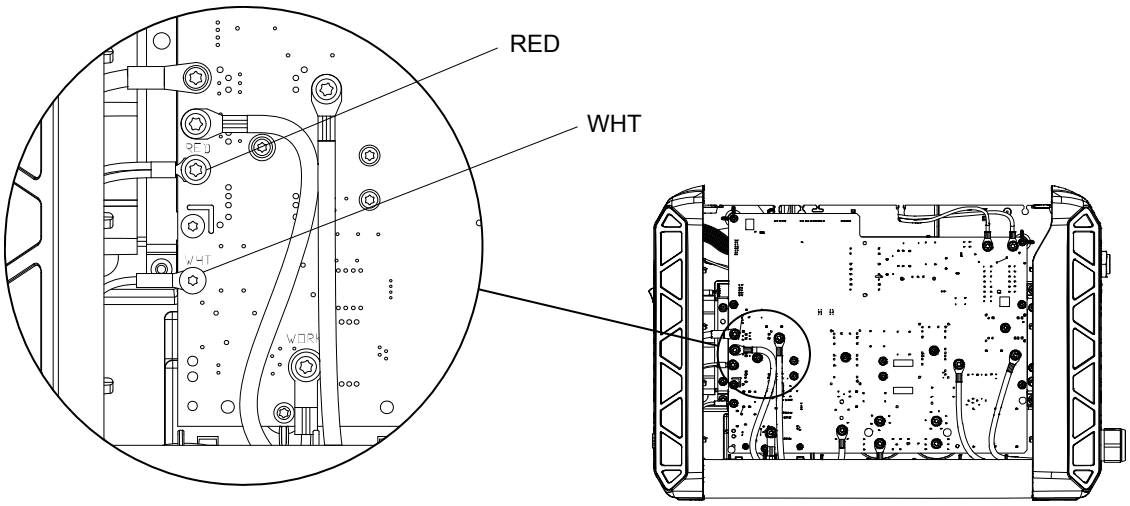

If you see this condition...	Do these steps...
The resistance is very low.	Continue with the next step.
The resistance is open.	1. Install a different Hypertherm cartridge. 2. Examine the torch lead to find if one of the wires in the lead is broken. Replace the torch lead if necessary.

5. Reconnect the power cord.
6. Set the power switch to ON (**I**).
7. Press-and-hold the Mode button for approximately 5 seconds to start a gas test.
8. Is gas flowing?

If yes...	Measure the resistance again between the red wire group (RED) and the white wire (WHT) from the torch receptacle to make sure that the resistance is very high (open circuit). If the resistance is very low (closed circuit) with the gas flowing, the nozzle and electrode are touching or a short-circuit occurred in one of the wires in the torch lead. Replace the Hypertherm cartridge or the torch lead, as necessary.
If no...	Examine the solenoid valve to make sure that it is operating correctly. Do the steps in Troubleshooting for missing gas input faults on page 57 and Troubleshooting for low gas pressure faults on page 55.

9. If possible, connect a different torch that is known to operate correctly.

10. If you continue to get the same fault condition, replace the power PCB.

Verification

- Because TSO and TSC faults can be intermittent, do these troubleshooting steps as many times as necessary.

Troubleshooting for temperature-related faults

When the Temperature fault LED and the System Fault LED both illuminate while the system is ON, the internal temperature of the plasma power supply is too hot or too cold. Hypertherm recommends that you operate the system only in external temperatures between -10°C – 40°C (14°F – 104°F).

Fault codes and fault LEDs

Fault code	Fault LEDs	Torch LED	Description	Stops the system from operating?
None	 ON  ON	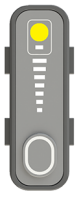 Yellow	The internal temperature of the plasma power supply is too hot or too cold.	Yes. You can continue to use the system when its internal temperature is no longer too hot or too cold.

Corrective action for temperature faults

1. Keep the plasma power supply ON to let the fan decrease the temperature of the internal components.
2. If the internal temperature of the plasma power supply gets near -30°C (-22°F), move the system to a warmer location.
3. Make sure that there is sufficient air flow around the plasma power supply.
4. Make sure that the plasma power supply cover is installed with the louvers in front of the fan.

Correction action in the plasma power supply

1. Make sure that the component barrier is correctly installed on the power PCB side of the plasma power supply.
2. Do the troubleshooting steps in Troubleshooting for fan faults (3-10-n) on page 111 to do a check of the internal fan.

Troubleshooting for when the Hypertherm cartridge or torch is not ready to cut

The Torch Cap fault LED illuminates when the torch or Hypertherm cartridge is not ready to cut or is not able to cut.

Fault codes and fault LEDs

Fault code	Fault LEDs	Torch LED	Description	Stops the system from operating?
None	 ON	 Yellow	The Hypertherm cartridge was off, the torch was disconnected, or the torch was in the yellow lock (X) position during a restart.	Yes

Corrective action for the Hypertherm cartridge and torch

1. Move the torch-lock switch to the green "ready to fire" position.

   This fault can show when you do a restart while the torch-lock switch is in the yellow lock (X) position.
2. Remove the Hypertherm cartridge, and reinstall it correctly.
3. Reconnect the torch to the plasma power supply, and do a quick restart.
4. **Optional:**

   Machine torch: Lock and unlock the torch, or do a quick restart.

   This fault can be caused by removing the Hypertherm cartridge without first setting the torch-lock switch to the yellow lock position or setting the power switch to OFF (**O**).
5. **Optional:**

Mini machine torch: Do a quick restart.

This fault can be caused by removing the Hypertherm cartridge without first setting the power switch to OFF (**O**).

6. If possible, do a test with a different torch that is known to work correctly.
7. Push down the plunger in the torch head and then release.

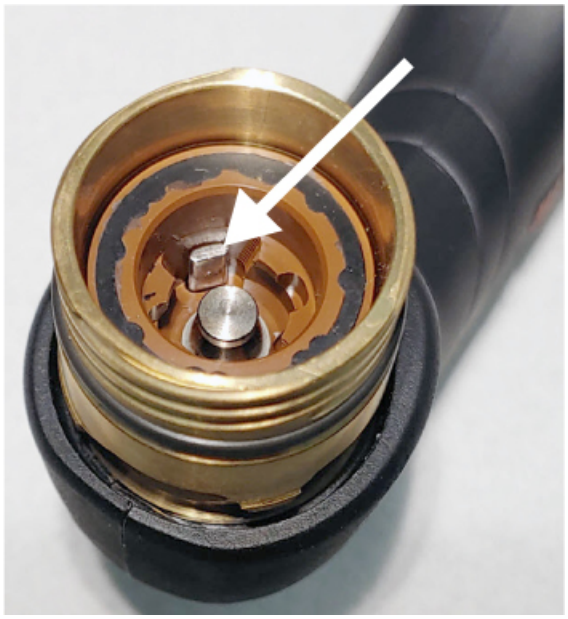

8. Does the plunger move freely and go back to its start position?

If yes...	Continue with the next procedure.
If no...	Replace the torch body.

Corrective action for the torch cap sensor in the torch and torch lead

1. Disconnect the torch from the plasma power supply.
2. Make sure that a Hypertherm cartridge is correctly installed on the torch and is not too loose or too tight.
3. Make sure that the torch is set to the green "ready to fire" position.

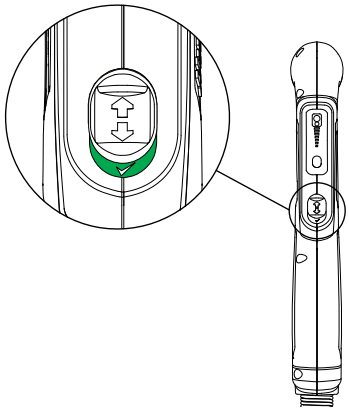

4. Measure the resistance between pin 5 and pin 7 in the torch connector.

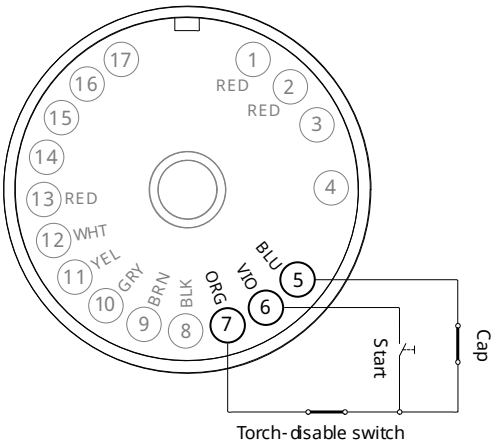

5. Is the resistance very low?

If yes...	Continue with the next step.
If no...	The cap-sensor switch in the torch is open. Continue with step step 9 on page 71.

6. Set the torch to the yellow lock (**X**) position.

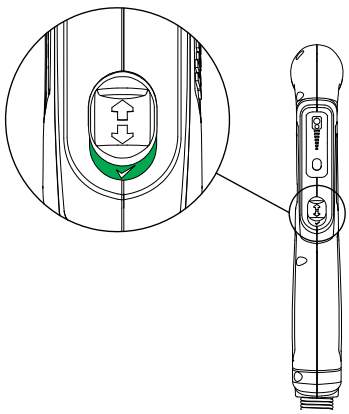

7. Measure the resistance between pin 5 and pin 7 in the torch connector again.
8. Is the resistance open?

If yes...	Continue with Corrective action for the torch cap sensor in the plasma power supply on page 71.
If no...	The cap-sensor switch circuit is closed. Continue with the next step.

9. Do a check for continuity on the torch wires:
    a. Remove the left side of the torch shell.
    b. Do a check for continuity between the blue wire and pin 5 (BLU) in the torch connector.
    c. Do a check for continuity between the orange wire and pin 7 (ORG) in the torch connector.
10. Do both torch wires have continuity?

If yes...	Replace the cap-sensor switch.
If no...	Replace the torch lead.

Corrective action for the torch cap sensor in the plasma power supply

1. Set the power switch to OFF (**O**), and disconnect the power cord from the power source.
2. Remove the plasma power supply handle and cover.
3. Remove the component barrier.
4. Do a check for continuity on the torch receptacle.
5. Does each torch receptacle wire have continuity?

If yes...	Continue with the next step.
If no...	Replace the torch receptacle.

6. Reconnect the torch to the plasma power supply.
7. Make sure that the Hypertherm cartridge is installed correctly on the torch.
8. Make sure that the torch is set to the green "ready to fire" position.
9. Measure the resistance between pin 1 and pin 2 at J19 on the power PCB.

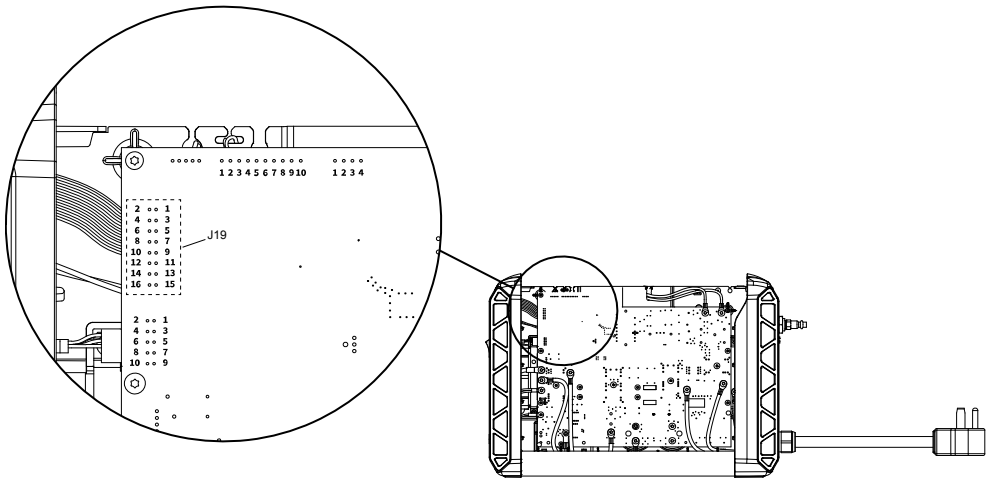

10. Is the resistance very low, approximately 1 ohm (Ω) or less?

If yes...	If you cannot find or correct the problem, a qualified service technician must repair the system. Speak to your distributor or authorized repair facility.
If no...	The cap-sensor switch circuit is open. Replace the power PCB.

Troubleshooting for start signal faults

The Temperature fault LED and the System Fault LED flash alternately when the system receives a Start signal from the torch at the same time that the power switch is set to ON (**I**). This fault can prevent the torch from firing a plasma arc.

Fault codes and fault LEDs

Fault code	Fault LEDs	Torch LED	Description	Stops the system from operating?
None	Flash alternately	Yellow	The plasma power supply received a signal to start cutting at the same time that the power switch was set to ON (**I**). This condition is also referred to as a "stuck start."	Yes. A quick restart is necessary.

Corrective action: quick restart

1. Do you have a hand torch or a machine torch?

Hand torch:	Release the torch trigger.
Machine torch:	Set the Start signal to off.

2. Do a quick restart of the plasma power supply.
3. If the Temperature fault LED and the System Fault LED continue to flash alternately, do the corrective action for hand torches or machine torches.

Corrective action for hand torches

1. If possible, do a test with a different hand torch that is known to operate correctly.
2. Make sure that the torch is set to the green "ready to fire" position.
3. Do the Temperature fault LED and the System Fault LED continue to flash alternately?

If yes...	Continue with step step 7 on page 74.
If no...	Continue with the next step.

4. Disconnect the torch from the plasma power supply.
5. Make sure that the torch trigger is not being pulled, and measure the resistance between pin 6 and pin 7 in the torch connector.



6. Is the resistance very low?

If yes...	• Do a check for short circuits in the torch lead. Replace the torch lead if the wires in it are short-circuited. • Do a check for short circuits in the trigger switch assembly. Replace the trigger switch if it is short-circuited.

If no...	Reconnect the torch to the plasma power supply, and continue with the next step.

7. Do the Temperature fault LED and the System Fault LED continue to flash alternately?

If yes...	Replace the power PCB.
If no...	Disconnect the torch from the plasma power supply, and continue with the next step.

8. Measure the resistance between pin 6 and pin 7 in the torch connector while you are pulling the torch trigger.
9. Is the resistance very high?

If yes...	• Do a check for open circuits in the torch lead. Replace the torch lead if there are open circuits. • Do a check of the trigger switch for open circuits. Replace the trigger switch if there are open circuits.
If no...	Continue with the next step.

10. If the torch continues to not fire a plasma arc, and gas does not flow from the torch, do a check for continuity between the torch and the plasma power supply:
    a. Put the torch on its side, and remove the left side of the torch shell.
    b. Do a check for continuity between pin 4 on the torch PCB (red wire) and pin 3 at J19 on the power PCB.
    c. Do a check for continuity between pin 5 on the torch PCB (orange wire) and pin 2 at J19 on the power PCB.
    d. If you do not have continuity between the pins, replace the power PCB.

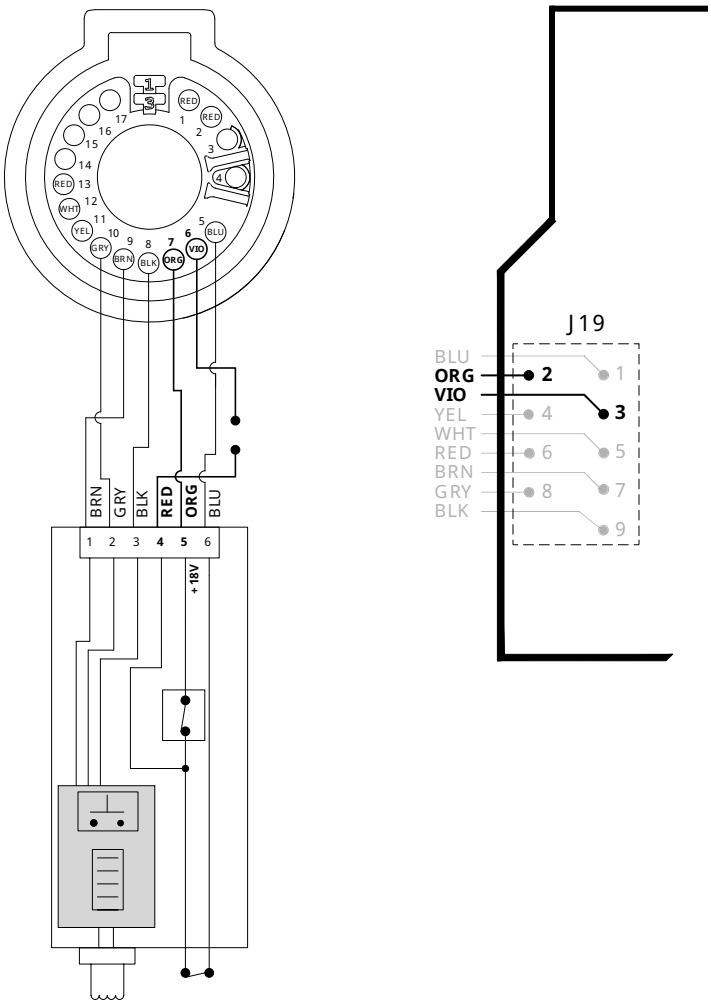

Corrective action for machine torches and the CNC

1. If possible, do a test with a different machine torch that is known to operate correctly.
2. Make sure that the torch is set to the green "ready to fire" position.
3. Do the Temperature fault LED and the System Fault LED continue to flash alternately?

If yes...	Continue with the next step. The problem can be with the CNC or with the machine interface cable.
If no...	Continue with Corrective action for machine torches and the plasma power supply on page 77. There can be a problem with the power PCB or the machine interface receptacle in the plasma power supply.

4. Disconnect the machine interface cable from the rear of the plasma power supply.

   This is the 14-pin cable that connects the plasma power supply to the CNC.
5. Do a quick restart.

6. If the fault code goes away and the system operates correctly, restart the CNC.

   This can remove a start signal if there is one pending.

7. Connect the machine interface cable to the plasma power supply, and do a quick restart.
8. If you continue to see the same fault condition, disconnect the machine interface cable from the plasma power supply again.
9. Do a check for continuity on pin 3 and on pin 4 in the machine interface cable connector.

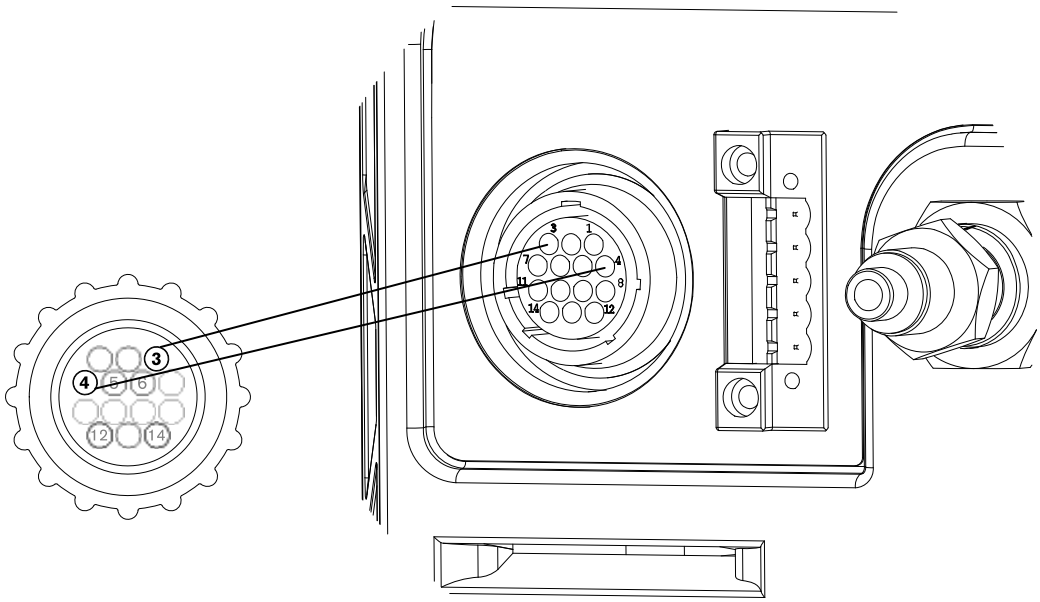

10. Is there continuity on both pins?

If yes...	There can be a problem with the CNC or with the cable. Continue with the next step.
If no...	There can be a problem in the plasma power supply. Continue with Corrective action for machine torches and the plasma power supply on page 77.

11. Do a check for open circuits in the machine interface cable between pin 3 and the CNC and between pin 4 and the CNC.
12. Are the signals open?

If yes...	There can be a problem with the CNC. Go to the last step.
If no...	There can be a problem with the cable. Continue with the next step.

13. Disconnect the machine interface cable from the CNC.
14. Are there short-circuited wires in the cable?

If yes...	Replace the machine interface cable.

If no...	Continue with the next step.

15. If there is not a problem with the machine interface cable, speak to a support technician for the CNC to identify possible problems that can prevent the torch from firing.

Corrective action for machine torches and the plasma power supply

1. Set the power switch to OFF (**O**), and disconnect the power cord from the power source.
2. Remove the plasma power supply handle and cover.
3. Remove the component barrier.
4. Do a check for continuity on pin 1 (red) and pin 2 (black).

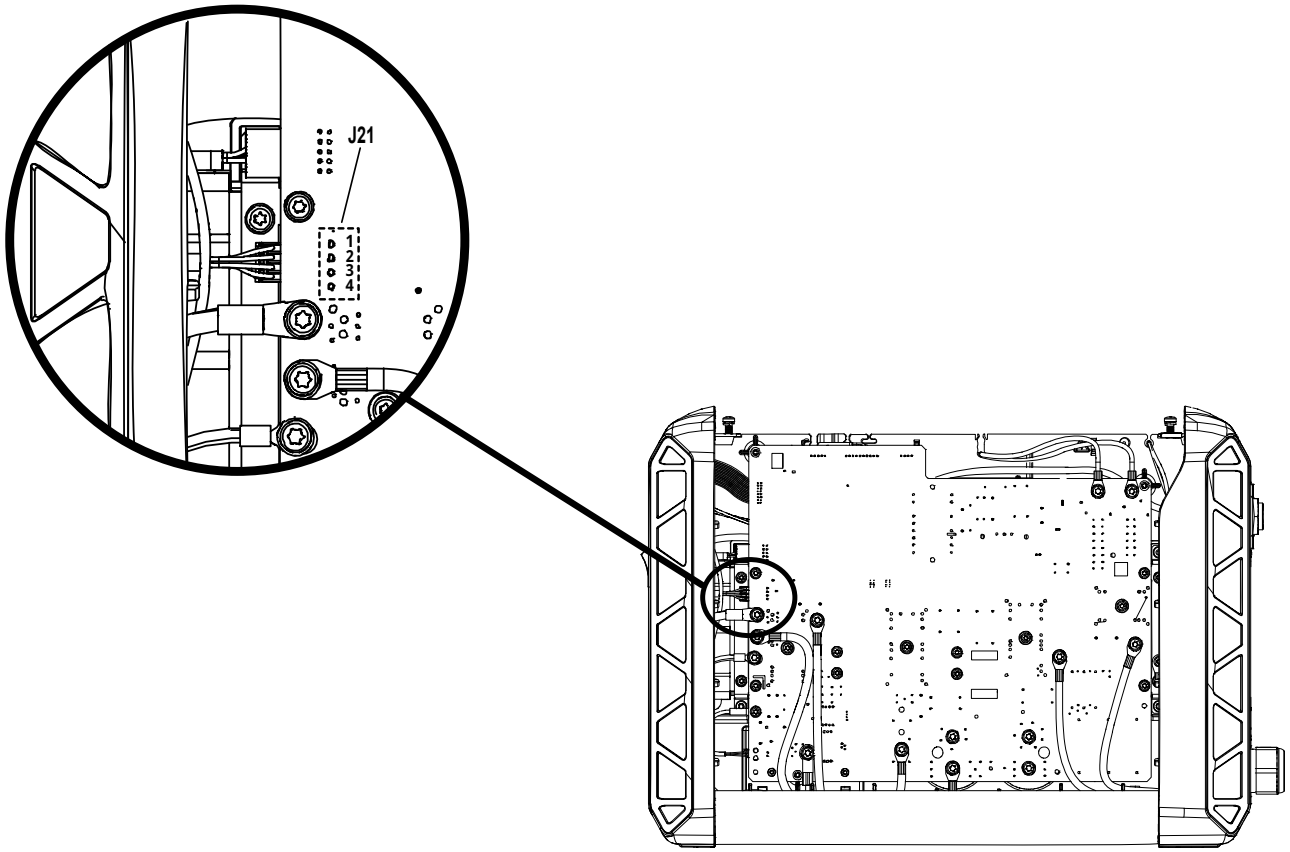

5. Is there continuity on both pins?

If yes...	There is possibly a problem with the wiring harness for the machine interface receptacle. Replace the machine interface receptacle with the voltage divider PCB assembly (223476).
If no...	There is possibly a problem with the power PCB. Replace the power PCB.

Troubleshooting for input voltage faults

A flashing Power ON LED can identify a problem with the input voltage.

Fault codes and fault LEDs

Fault code	Fault LEDs	Torch LED	Description	Stops the system from operating?
None	 Flashes  ON	 Yellow	An AC input voltage phase loss occurred. This is applicable only to 3-phase models.	Yes. A cold restart is necessary.
None	 Flashes	 Yellow	The AC input voltage is too low (>10% less than the rated voltage for 1-phase models or >15% less than the rated voltage for 3-phase models) or too high (>10% more than the rated voltage for 1-phase models or >15% more than the rated voltage for 3-phase models).	Yes. A cold restart is necessary.

Examine the incoming line voltage

1. If applicable, disconnect the system from generator power.
2. What fault LED do you see?

If you see this fault LED...	Do these steps...
The Power ON LED flashes and the System Fault LED is illuminated.	Have an electrical technician examine all input phases, fuses, and breakers for correct voltage (phase-to-phase and phase-to-ground) at the power source and at the plasma power supply.
The Power ON LED flashes.	Have an electrical technician examine the line and increase or decrease the voltage.

3. If you see the same fault condition, continue with the next procedure.

Corrective action for the incoming line voltage

1. Set the power switch to OFF (**O**), and disconnect the power cord from the power source.
2. Remove the plasma power supply handle and cover.

3. Remove the component barrier.

⚠ WARNING

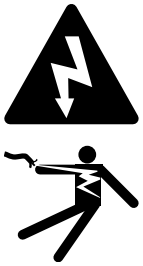

ELECTRIC SHOCK CAN KILL

Let the system release internal voltages before you touch the capacitors. The capacitors can hold a charge for several minutes after the system is set to OFF.

4. From the fan side of the plasma power supply, pull the red insulating covers off the power cord and power switch wires.
5. Reconnect the electric power, but keep the power switch in the OFF (**O**) position.
6. From the fan side of the plasma power supply, examine the line voltage on the power switch wires with the power switch in the OFF (**O**) position.
    a. **1-phase CSA models:** Measure the voltage at the blue and brown wire connections on the center panel.

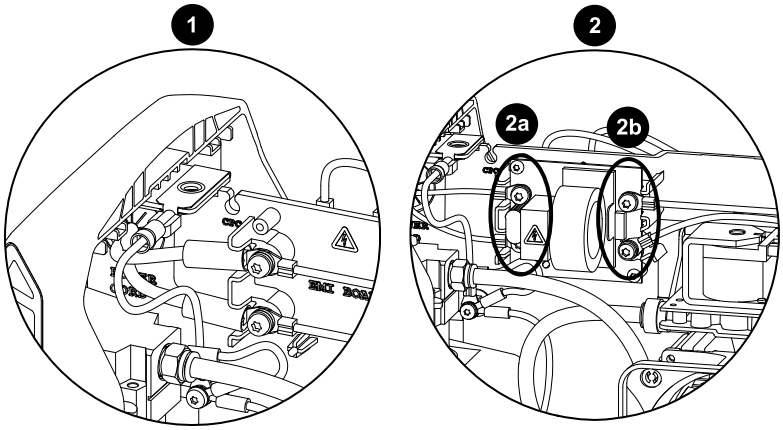

1	CSA 1-phase	**2a**	AC in
2	CE/CCC 1-phase	**2b**	AC out

    b. **1-phase CE/CCC models:** Wait approximately 10 minutes for internal voltages to discharge, and measure the voltage at the blue and brown power switch wire connections on the right side of the EMI PCB that have the label **SW OUT**.

If you get a voltage reading...	Continue with the next step.

If you get no voltage reading, or if the voltage reading is very low...	Measure the voltage at the blue and brown power cord wire connections on the left side of the EMI PCB that have the label **AC IN**.
If the voltage is correct on the power cord wires but incorrect on the power switch wires...	Replace the EMI PCB.

c. **3-phase models:** Measure the voltage at the wire connections on the center panel:

- White wire (WHT) to black wire (BLK)
- White wire (WHT) to brown wire (BRN)
- Black wire (BLK) to brown wire (BRN)

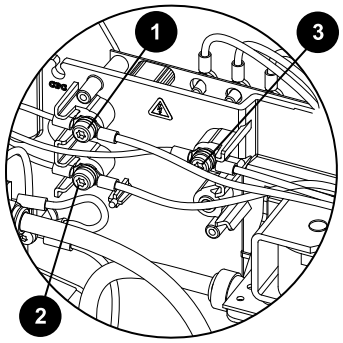

1 Brown

2 Black

3 White

7. Is the voltage the same as the line voltage of the incoming circuit, and is it correct for the model of the plasma power supply?

If yes...	Continue with the next step.
If no...	Do a check to find if you have power to the system. If you do have power, examine the power cord and its plug for damage, and replace it if necessary.

All values can be ±15%. Refer to the *Powermax45 SYNC Operator Manual (811470)* for the voltage requirements of each plasma power supply configuration.

8. If the power source and power cord are operating correctly, set the power switch to ON (**I**).
9. Measure the AC voltage to make sure that the AC voltage is the same as the incoming line voltage.

a. **1-phase models:** Measure the voltage from J1 (WHT) to J2 (BLK).

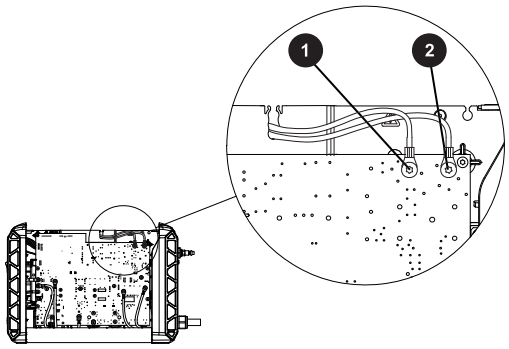

1 J2 (black) **2** J1 (white)

b. **3-phase models:** Measure the voltage:

- J1 (WHT – white wire with black stripe) to J2 (BLK – black wire with white stripe)
- J2 to J4 (BRN – brown wire with white stripe)
- J1 to J4

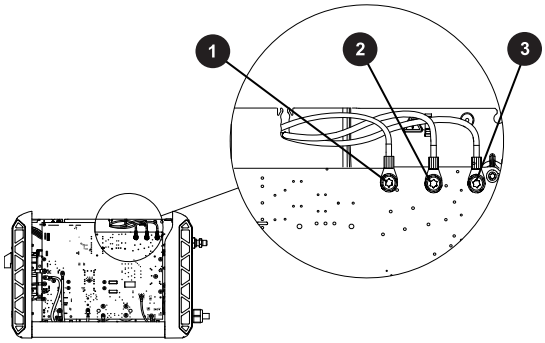

1 J1 (white) **3** J4 (brown)

2 J2 (black)

10. If the voltage reading is too high or too low, set the power switch to OFF (**O**), and disconnect the power cord from the power source.
11. Examine the wires that go from the power switch to the power PCB and from the power switch to the center panel (or EMI PCB).
12. Replace any wires that are frayed or have damage.
13. If the wires are in good condition and are connected securely, examine the power switch:
    a. Make sure that none of the wire connections or screws are loose or have damage.
    b. Make sure that there is no damage to the contacts on the power switch.

c. Do a mechanical check of the power switch by setting it to ON and then OFF multiple times.

14. Replace the power switch if it does not operate correctly and stay in the ON position.
15. If the system does not operate correctly, continue with the next procedure.

Corrective action for the power PCB voltage

1. If necessary:
   a. Set the power switch to OFF (**O**), and disconnect the power cord from the power source.
   b. Remove the plasma power supply handle and cover.
   c. Remove the component barrier.

⚠ WARNING

PROTECTIVE EQUIPMENT IS NECESSARY

Always put on the correct personal protective equipment (PPE) before you do tests on powered equipment.

2. Reconnect the electric power, and set the power switch to ON (**I**).

NOTICE

DO NOT CONNECT -VBUS TO GROUND

Do not connect -VBUS (TP1) to ground. This can cause damage to the plasma power supply so that it becomes unserviceable.

3. Use a multimeter to measure the voltages in the table to make sure that the power PCB (PCB3) is operating correctly.

Component	Pin number to ground	Test	Expected value
Fan	Pin 1 on J7	48 VDC	48 VDC ±10%
Solenoid valve	Pin 7 on J8	48 VDC	48 VDC ±10%
	Pin 5 on J8	24 VDC	24 VDC ±10%

Component	Pin number to ground	Test	Expected value
Display PCB	Pin 1 on J3	3.3 VDC	3.3 VDC ±10%
	Pin 2 on J3	3.3 VDC	3.3 VDC ±10%
	Pin 4 on J3	5.0 VDC	5.0 VDC ±10%

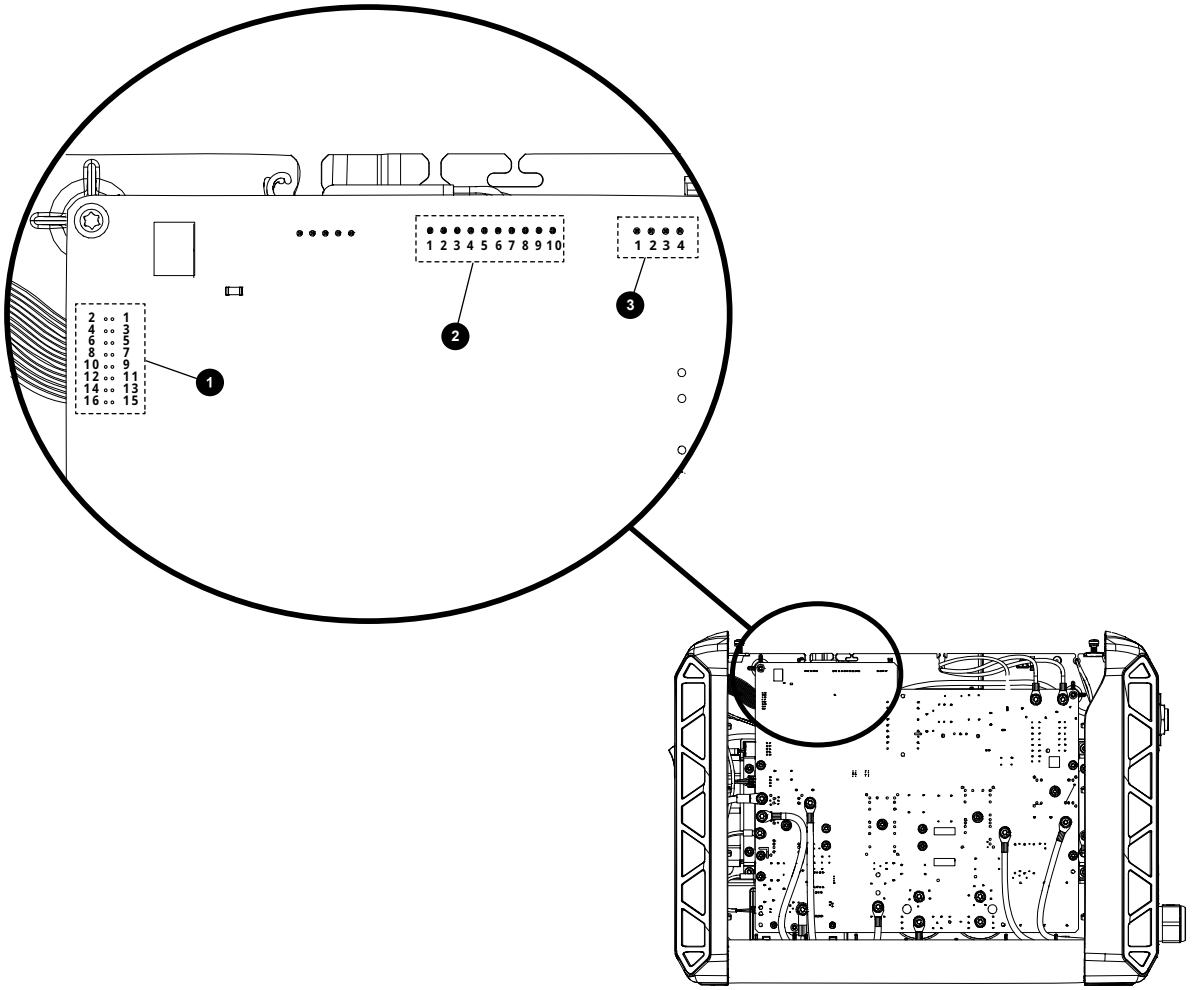

1 J3 display PCB

2 J8 solenoid valve

3 J7 fan

4. Is the 48 VDC voltage for the fan correct?

If yes...	Continue with step step 7 on page 84.
If no...	Continue with the next step.

5. Disconnect the J7 fan connector from the power PCB, and measure the voltage again from pin 1 on J7 to ground.
6. Is the voltage now correct?

If yes...	Replace the fan.
If no...	Continue with the next step.

7. Is the 48 VDC voltage for the solenoid valve correct?

If yes...	Continue with step step 10 on page 84.
If no...	Continue with the next step.

8. Disconnect the J8 solenoid valve connector from the power PCB, and measure the voltage again from pin 7 on J8 to ground.
9. Is the voltage now correct?

If yes...	Replace the solenoid valve.
If no...	Continue with the next step.

10. If the 24 VDC voltage for the solenoid valve is not correct, and if the 3.3 VDC or 5.0 VDC voltage reading at J3 is not correct, disconnect the display PCB ribbon cable from J3 on the power PCB.
11. Measure the voltage again from pin 1, pin 2, and pin 4 on J3 to ground.
12. Are the voltages now correct?

If yes...	Replace the display PCB.
If no...	Replace the power PCB.

Troubleshooting for remote controller faults (0-11-n)

A 0-11-n fault code identifies a problem with the remote controller. There can also be a problem with the software interface to the system. The system cannot interpret the operating mode, output current, or gas pressure information coming from the controller.

Fault codes and fault LEDs

Fault code	Fault LEDs	Torch LED	Description	Stops the system from operating?
0-11-0	 ON	CNC use only	The remote control operating mode is incorrect or not permitted for the installed Hypertherm cartridge. The permitted operating modes for Hypertherm cutting cartridges is 1 (Cut mode). The permitted operating mode for a Hypertherm gouging cartridge is 2 (Gouge mode).	No. These fault codes only apply to remotely controlled plasma power supplies.
0-11-1			The permitted operating modes for Hypertherm cutting cartridges is 1 (Cut mode). The permitted operating mode for a Hypertherm gouging cartridge is 2 (Gouge mode). The permitted values relate to the minimum and maximum output current (A) for the plasma power supply and the installed Hypertherm cartridge.	
0-11-2			The remote control gas pressure is incorrect or not permitted. The permitted gas pressure relates to the selected process and operating mode, and to the installed torch, torch lead, and Hypertherm cartridge.	

Corrective action for 0-11-0, 0-11-1, and 0-11-2 faults

1. Examine the programming code for incorrect process variables.
2. Repair the controller.
3. If you cannot find or correct the problem, a qualified service technician must repair the system.

   Speak to your distributor or authorized repair facility.

Troubleshooting for incorrect output gas pressure conditions (0-12-n)

An 0-12-n fault code identifies a condition where the output gas pressure is too low, too high, or not stable. The 0-12-n fault codes show only on a CNC through an RS-485 serial interface. They do not show on the plasma power supply 2-digit display.

Fault codes and fault LEDs

Fault code	Fault LEDs	Torch LED	Description	Stops the system from operating?
0-12-1	 ON	CNC use only	The output gas pressure is too low.	No
0-12-2			The output gas pressure is too high.	
0-12-3			The output gas pressure is not stable.	

Corrective action for 0-12-0, 0-12-1, and 0-12-2 faults

1. For optimum system performance, make sure that the inlet gas pressure stays between 7.6 bar – 8.3 bar (110 psi – 120 psi) while gas is flowing.

   Never use more than the maximum gas pressure of 9.3 bar (135 psi).

2. Which fault code do you see?

0-12-1	Increase the inlet gas pressure from the gas supply source.
0-12-2	Decrease the inlet gas pressure from the gas supply source.
0-12-3	Adjust the inlet gas pressure from the gas supply source as necessary.

3. Make sure that the gas lines do not have kinks, blockages, or other damage.
4. Do a gas test to find if the plasma power supply's actual output gas pressure is lower than the set pressure by more than an acceptable quantity.

   Refer to Do a gas test on page 23.

5. If the fault continues, examine the gas system and the solenoid valve by doing the troubleshooting steps in Troubleshooting for low gas pressure faults on page 55.

Troubleshooting for Hypertherm cartridge installation faults (0-14-n)

An 0-14-n fault identifies a condition where the Hypertherm cartridge is not recognized or is not operating correctly.

Fault codes and fault LEDs

Fault code	Fault LEDs	Torch LED	Description	Stops the system from operating?
0-14-0	ON AC ON	 Flashes yellow	This fault shows when you install a Hypertherm cartridge, and it cannot send data to the plasma power supply. This fault code stops the system from operating. Electrical noise can cause a bad data connection. For example, high frequency electrical noise from TIG welders can cause interference. Keep electrical noise in the work area as low as possible. To prevent possible damage to the workpiece and Hypertherm cartridge, the system automatically: • Sets the output current to 45 A. • Sets the operating mode to Cut mode. • Sets the output gas pressure to cut pressure. If necessary, you can manually change these settings to cut without a data connection.	Yes
0-14-1	AC ON		This fault shows when a Hypertherm cartridge cannot send data to the plasma power supply for some reason. This fault code does not stop the system from operating. This error code occurs most likely due to poor Hypertherm cartridge installation.	No

Corrective action for 0-14-0 faults

1. Decrease electrical noise in the work area as much as you can.
2. Set the torch-lock switch to the yellow lock (**X**) position and then back to the green "ready to fire" position.

3. Do a quick restart.
4. Install the Hypertherm cartridge again.

Corrective action for 0-14-1 faults

1. When this fault occurs, you can continue to cut or gouge, but **you must set the output current (A) and the operating mode manually**.
2. Lightly blow air into the Hypertherm cartridge to remove dust or other contamination.
3. Make sure that the green ring inside the Hypertherm cartridge is not broken.



4. Install the Hypertherm cartridge again.

Troubleshooting for PCB hardware protection faults (0-19-9)

A 0-19-9 fault code usually occurs when the input power stops or when power PCB hardware protection occurs for components in the plasma power supply.

Fault codes and fault LEDs

Fault code	Fault LEDs	Torch LED	Description	Stops the system from operating?
0-19-9	This fault code only shows on a CNC, or when you use the Hypertherm cartridge reader (528083) and the Cartridge Reader app to read data from the Hypertherm cartridge.		The plasma arc stops. After 10 seconds you can start it again.	Fault 0-19-9 can occur up to nine times before it becomes a 2-nn-n or 3-nn-n fault. A 2-nn-n or 3-nn-n fault stops the plasma power supply from operating.

Corrective action for 0-19-9 faults

1. Decrease electrical noise in the work area as much as you can, and try again to cut when the 0-19-9 fault code goes away.
2. If you use serial communications, wait for one minute for the fault to go away on its own.

   This fault can occur temporarily on the CNC when you set the plasma power supply to OFF (**O**).
3. If the 0-19-9 fault becomes a 2-nn-n fault or a 3-nn-n fault, refer to Internal component faults (1-nn-n, 2-nn-n, 3-nn-n) on page 52 for possible solutions to each fault condition.

   - A 2-nn-n or 3-nn-n fault identifies a hardware fault with an internal component.
   - As long as power to the system is not stopped, the 0-19-9 fault can occur up to nine times before it becomes a 2-nn-n or 3-nn-n fault.
   - A cold restart sets the 0-19-9 fault counter back to zero.

Troubleshooting for duty cycle faults (0-40-5)

A 0-40-5 fault code indicates that the plasma power supply has exceeded its rated duty cycle.

Fault codes and fault LEDs

Fault code	Fault LEDs	Torch LED	Description	Stops the system from operating?
0-40-5	 ON	 Yellow	The plasma power supply has reached its duty cycle limit and must cool down for at least 3.5 minutes.	Yes

Corrective action for 0-40-5 faults

1. Wait for the plasma power supply to cool down.
2. Make sure that there is sufficient air flow around the plasma power supply.
3. Make sure that the fan is operating correctly.
4. If possible, decrease the output current (A), or decrease the period of continuous "arc on" time when you cut.

   These steps can help to keep the system in its duty cycle limits.

Troubleshooting for torch-lock switch faults (0-50-n)

A 0-50-n fault code is usually an indication that the torch-lock switch is set to the yellow lock (X) position or that the system is reading data from the Hypertherm cartridge.

Fault codes and fault LEDs

Fault code	Fault LEDs	Torch LED	Description	Stops the system from operating?
0-50-1	 ON	 Yellow	The torch-lock switch is set to the yellow lock (X) position.	Yes
0-50-2			The torch-lock switch is set to the green “ready to fire” position, but the torch is not prepared to fire.	Yes
0-50-3	 ON		The system is reading data from the Hypertherm cartridge. If the system cannot read the data from the Hypertherm cartridge, a different fault code will show. The usual behavior when this happens is to see a 0-50-2 fault code after 0-50-3 goes away.	Yes

Corrective action for 0-50-1 faults

1. Hand torch:
    a. Move the torch-lock switch to the green “ready to fire” position.
    b. Fire the torch one time to get the warning puffs of air.
    c. Fire the torch again to get a plasma arc.
2. Machine torch:
    a. Move the torch-lock switch to the green “ready to fire” position.
    b. Fire the torch to get a plasma arc.

Corrective action for 0-50-2 faults

1. Hand torch:
    a. Fire the torch one time to get the warning puffs of air.
    b. The 0-50-2 fault code goes off, and the LED on the hand torch changes from yellow to green.

        The torch is now prepared to fire a plasma arc.
2. Machine torch:
    a. Fire the torch to get a plasma arc.

b. **Optional:**

If the 0-50-2 fault code does not go off, send a STOP signal from the CNC to remove the fault.

Corrective action for 0-50-3 faults

1. Wait for the fault code to go away on its own.
2. If a 0-50-2 fault code shows after the 0-50-3 goes away, fire the torch one time to get the warning puffs of air.

   The 0-50-2 fault code goes away. The torch is now prepared to fire a plasma arc.
3. Try a different Hypertherm cartridge.

Troubleshooting for torch connection faults (0-52-0)

The system usually shows a 0-52-0 fault code as an indication that the torch is not connected to the plasma power supply.

Fault codes and fault LEDs

Fault code	Fault LEDs	Torch LED	Description	Stops the system from operating?
0-52-0	 ON  ON  ON	 None	The torch is not connected. If you disconnect the torch while the plasma power supply is set to ON (**I**), you get the 0-52-0 fault code. If you disconnect the torch while the plasma power supply is set to OFF (**O**), you get the 0-50-0 fault code the next time you set the plasma power supply to ON (**I**).	Yes

Corrective action for 0-52-0 faults

1. Make sure that the torch lead is correctly connected to the FastConnect receptacle on the front of the plasma power supply.

2. Do a quick restart.

Troubleshooting for an RF communication fault (0-98-1)

An 0-98-1 fault code identifies a RF communication failure between the Hypertherm cartridge and the torch.

When this fault occurs, the Hypertherm cartridge is not sending data to the system, so the system cannot collect data about the Hypertherm cartridge. The problem can be with the Hypertherm cartridge or with the SmartSYNC torch.

Fault codes and fault LEDs

Fault code	Fault LEDs	Torch LED	Description	Stops the system from operating?
0-98-1	 ON	 Yellow	An RF communication failure occurred between the Hypertherm cartridge and the torch.	No. You can continue to cut or gouge, but you must set the output current (A) and the operating mode manually.

Corrective action for the Hypertherm cartridge (0-98-1)

1. Make sure that the Hypertherm cartridge is installed correctly.
2. Make sure that the green ring inside the Hypertherm cartridge is not broken.



3. If you have a Hypertherm cartridge reader (528083), do a test to identify if the reader can pull data from the Hypertherm cartridge.
4. Install a new Hypertherm cartridge.
5. If a new Hypertherm cartridge does not remove the fault condition, continue with the next procedure.

Corrective action for the torch (0-98-1)

1. Disconnect the SmartSYNC torch from the plasma power supply.
2. Put the torch on its side, and remove the left side of the torch shell.
3. Are the two antenna wires securely connected to the torch PCB?

If yes...	Continue with the next step.
If no...	Adjust the antenna wires as necessary until they connect fully and securely in the connector on the torch PCB.

4. Disconnect the two antenna wires from the torch PCB.

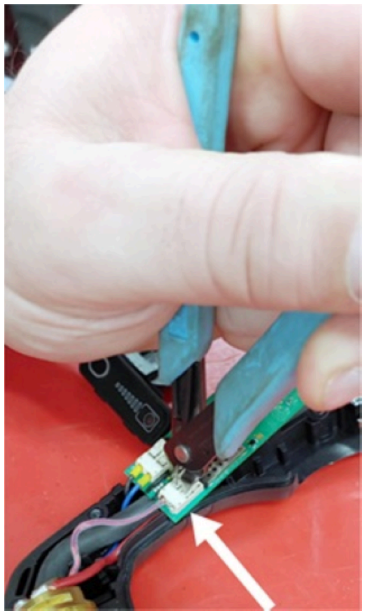

   a. Lightly push down the tabs on the antenna connector on the torch PCB with your thumb or fingers.

      You can also use a tool to push down the tabs if the points are not too sharp. The pliers shown are one example.

   b. While you hold down the tabs, pull the antenna wires out of the connector.

If the antenna connectors look like the one shown here, insert an object such as a paper clip into the holes to release the antenna wires.

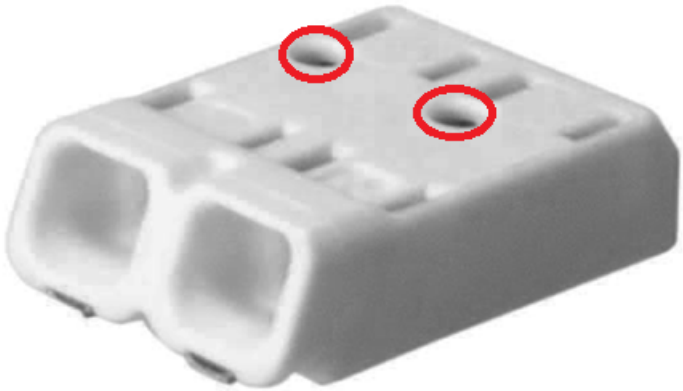

5. With the antenna wires disconnected, measure the resistance of the antenna coil in the connector on the torch PCB.

   Is the resistance less than 1 ohm (Ω)?

If yes...	the antenna wires have possible damage. Replace the torch body.
If no...	the antenna on the torch PCB has possible damage. Replace the torch PCB.



Troubleshooting for a plasma power supply or torch communication fault (0-98-2)

An 0-98-2 fault code identifies a communication failure between the torch and the plasma power supply.

When this fault occurs, the SmartSYNC torch is not sending data to the plasma power supply, so the system cannot collect data about the Hypertherm cartridge. The problem can be with the Hypertherm cartridge or with the SmartSYNC torch. There can be a problem with:

- The PCB in the torch
- The torch lead
- The quick-disconnect receptacle
- The torch communication circuitry on the PCB in the plasma power supply

Fault codes and fault LEDs

Fault code	Fault LEDs	Torch LED	Description	Stops the system from operating?
0-98-2	 ON	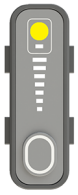 Yellow	A communication failure occurred between the torch and the plasma power supply.	No. You can continue to cut or gouge, but you must set the output current (A) and the operating mode manually.

Corrective action for the plasma power supply (0-98-2)

1. Set the power switch on the plasma power supply to OFF (**O**).
2. Disconnect the SmartSYNC torch from the plasma power supply.
3. Set the power switch on the plasma power supply to ON (**I**).

   A 0-50-0 fault code shows if the torch is disconnected when you set the plasma power supply to ON.
4. In the quick-disconnect receptacle on the front of the plasma power supply, measure the voltage between pin 5 (blue wire) and pin 7 (orange wire).

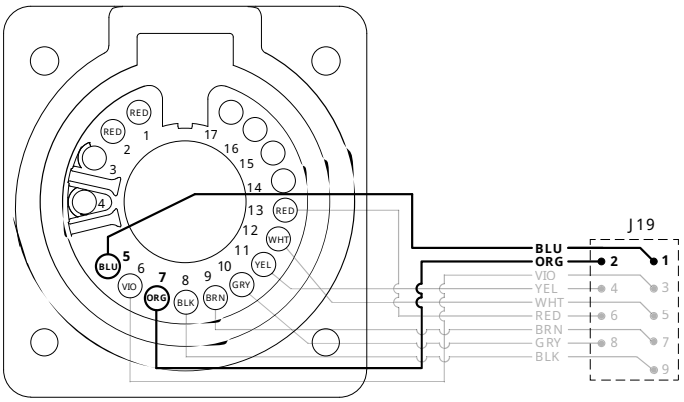

5. Is the voltage approximately 15 VDC?

If yes...	The problem is possibly with the torch. Continue with the corrective action steps for the torch in the next procedure.
If no...	Continue with the next step.

6. At the J19 connector on the power PCB, measure the voltage between pin 1 (blue wire) and pin 2 (orange wire).
7. Is the voltage approximately 15 VDC?

If yes...	Replace the quick-disconnect receptacle.
If no...	Replace the power PCB.

8. If communication faults continue, replace the DSP PCB.

Corrective action for the torch (0-98-2)

1. Connect the SmartSYNC torch to the plasma power supply.
2. Remove the left side of the torch shell.
3. Make sure that all wires are correctly and securely connected to the torch PCB.
4. At the torch lead receptacle on the torch PCB, measure the voltage between pin 3 (black wire) and pin 5 (orange wire).

   Keep the wires from the torch connected, and measure the voltage at the rear of the receptacle, as shown.

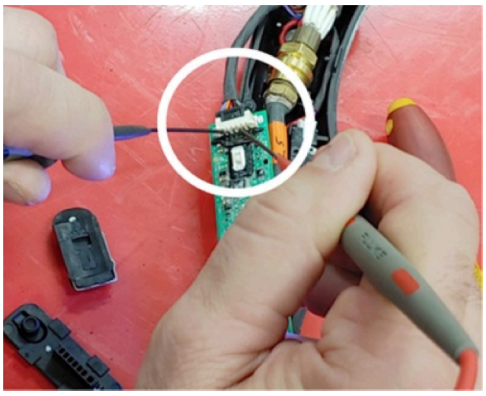

5. Is the voltage approximately 15 VDC?

If yes...	Continue with the next step.
If no...	Continue with step step 9 on page 100.

6. Do a check for continuity between the torch and the plasma power supply:
    a. Do a check for continuity between pin 1 on the torch PCB (brown wire) and pin 7 at J19 on the power PCB.
    b. Do a check for continuity between pin 2 on the torch PCB (gray wire) and pin 8 at J19 on the power PCB.
    c. If there is continuity between the pins, continue with step step 12 on page 101.
    d. If there is not continuity between the pins, continue with the next step.

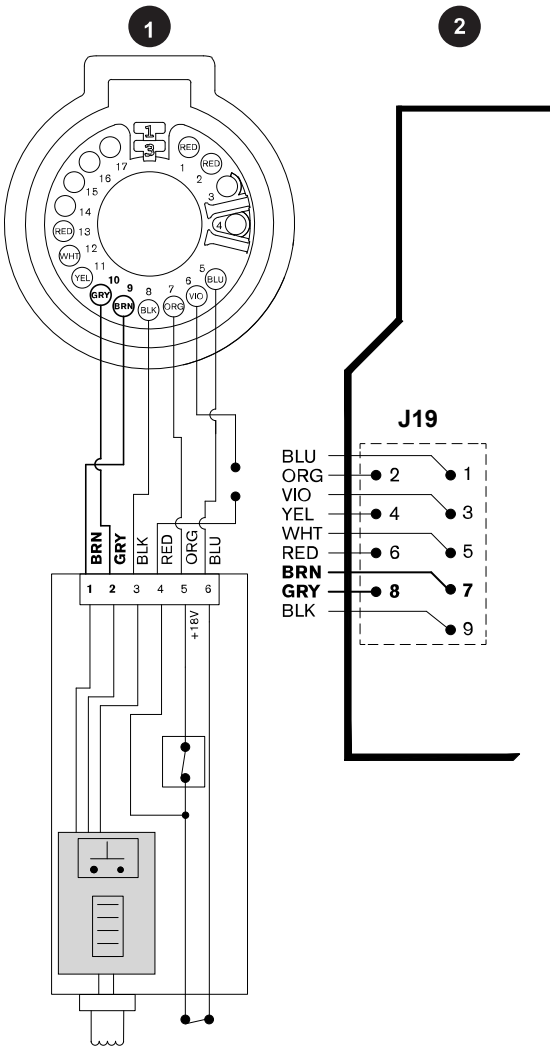

1 Pin 1 and pin 2 on torch PCB

2 Pin 7 and pin 8 on power PCB

7. Disconnect the torch from the plasma power supply.
8. Do a check for continuity on the torch:
    a. Do a check for continuity between pin 1 on the torch PCB (brown wire) and pin 9 in the torch connector.
    b. Do a check for continuity between pin 2 on the torch PCB (gray wire) and pin 10 in the torch connector.
    c. If there is continuity between the pins, continue with step step 10 on page 100.
    d. If there is not continuity between the pins, replace the torch lead.

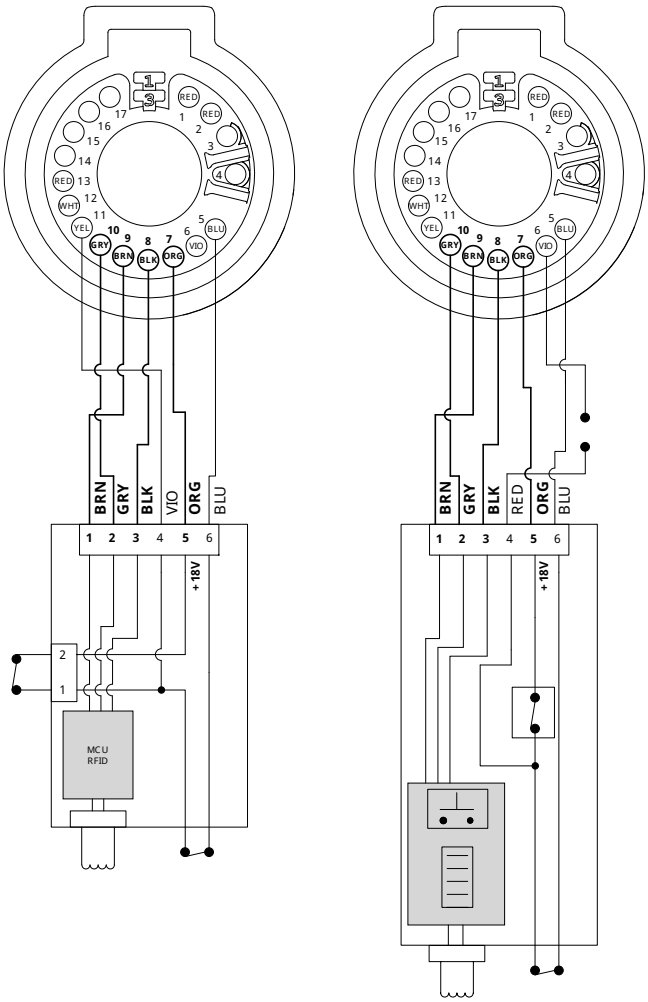

9. Disconnect the torch lead connector from the torch PCB.



10. Put the multimeter leads directly in the sockets for pin 3 and pin 5, and measure the voltage between pin 3 (black wire) and pin 5 (orange wire).

11. Is the voltage approximately 15 VDC?

If yes...	Replace the power PCB.
If no...	Continue with the next step.

12. Connect a different SmartSYNC torch to the plasma power supply that is known to operate correctly.
13. Do you continue to get the 0-98-2 fault?

If yes...	Replace the power PCB.
If no...	There is a possible problem with the original torch. Continue with the next step.

14. Connect the original SmartSYNC torch to the plasma power supply.
15. Is the torch a hand torch or a mechanized torch?

Hand torch	Is there an LED on the torch PCB that is illuminated or flashing? • If yes, replace the torch PCB. • If no, replace the torch lead.
Mechanized torch	Replace the torch PCB. If the 0--98-2 fault does not go away, replace the torch lead.

16. Disconnect the DSP PCB from the power PCB.

    Carefully remove the conformal coating from the pins, if necessary. Too much of this coating can prevent a good connection with the power PCB.

17. If the problem continues, replace the DSP PCB.
18. If the problem continues after a new DSP PCB is installed, replace the power PCB.

Troubleshooting procedures for 1-nn-n, 2-nn-n, and 3-nn-n fault codes

Troubleshooting for DSP and I/O faults (1-nn-n)

1-nn-n fault codes identify possible damage to components inside the plasma power supply.

Fault codes and fault LEDs

Fault code	Fault LEDs	Torch LED	Description	Stops the system from operating?
1-00-0	AC ON ON	 Red	A DSP PCB fault occurred.	Yes
1-20-0			An input/output (I/O) fault occurred.	Yes

Corrective action for 1-00-0 and 1-20-0 faults

1. Do a cold restart.

   In some conditions, a restart can remove the fault condition.

2. Replace the power PCB.

   If restarting the plasma power supply does not remove the fault condition, it is possible that the power PCB must be replaced.

Troubleshooting for an analog-to-digital converter fault (2-00-0)

A 2-00-0 system fault indicates that the analog-to-digital converter value is out of range.

Fault codes and fault LEDs

Fault code	Fault LEDs	Torch LED	Description	Stops the system from operating?
2-00-0	ON	 Red	The ADC value is out of range.	Yes

Corrective action for 2-00-0 faults

1. Do a cold restart.

   In some conditions, a restart can remove the fault condition.

2. Replace the power PCB.

   If restarting the plasma power supply does not remove the fault condition, it is possible that the power PCB must be replaced.

Troubleshooting for inverter module temperature sensor faults (2-10-n)

2-10-n faults could indicate that there is a problem with the power PCB.

Fault codes and fault LEDs

Fault code	Fault LEDs	Torch LED	Description	Stops the system from operating?
2-10-0	 ON	 Red	The inverter module temperature sensor is open.	Yes
2-10-1			The inverter module temperature sensor short-circuited.	Yes

Corrective action for 2-10-0 and 2-10-1 faults

1. Do a cold restart.

   In some conditions, a restart can remove the fault condition.

2. Replace the power PCB.

   If restarting the plasma power supply does not remove the fault condition, it is possible that the power PCB must be replaced.

Troubleshooting for solenoid valve pressure sensor faults (2-11-n)

A 2-11-0 or 2-11-1 fault code identifies a possible problem with the gas pressure sensor in the solenoid valve.

Fault codes and fault LEDs

Fault code	Fault LEDs	Torch LED	Description	Stops the system from operating?
2-11-0	ON	Red	The pressure sensor is open.	Yes
2-11-1			The pressure sensor short-circuited.	

Corrective action for electrical interference and pinched wires (2-11-0 and 2-11-1)

1. Make sure that the torch lead is fully connected in the quick-disconnect receptacle.
2. Move the plasma power supply to another location, and see if the problem continues.
3. Set the power switch to OFF (**O**), and disconnect the power cord from the power source.
4. Remove the plasma power supply handle and cover.
5. Remove the component barrier.
6. Examine the rear of the quick-disconnect receptacle to see if the wires from the receptacle are pinched, twisted, or have other damage.
7. Replace the receptacle if necessary.

   Refer to Remove the torch quick-disconnect receptacle on page 151.

Corrective action for the power input and solenoid valve coils (2-11-0 and 2-11-1)

1. Disconnect the solenoid valve from J8 on the power PCB.
2. Reconnect the power cord.
3. Set the power switch to ON (**I**).
4. Measure the voltage between pin 1 and pin 4 at J8 on the power PCB.

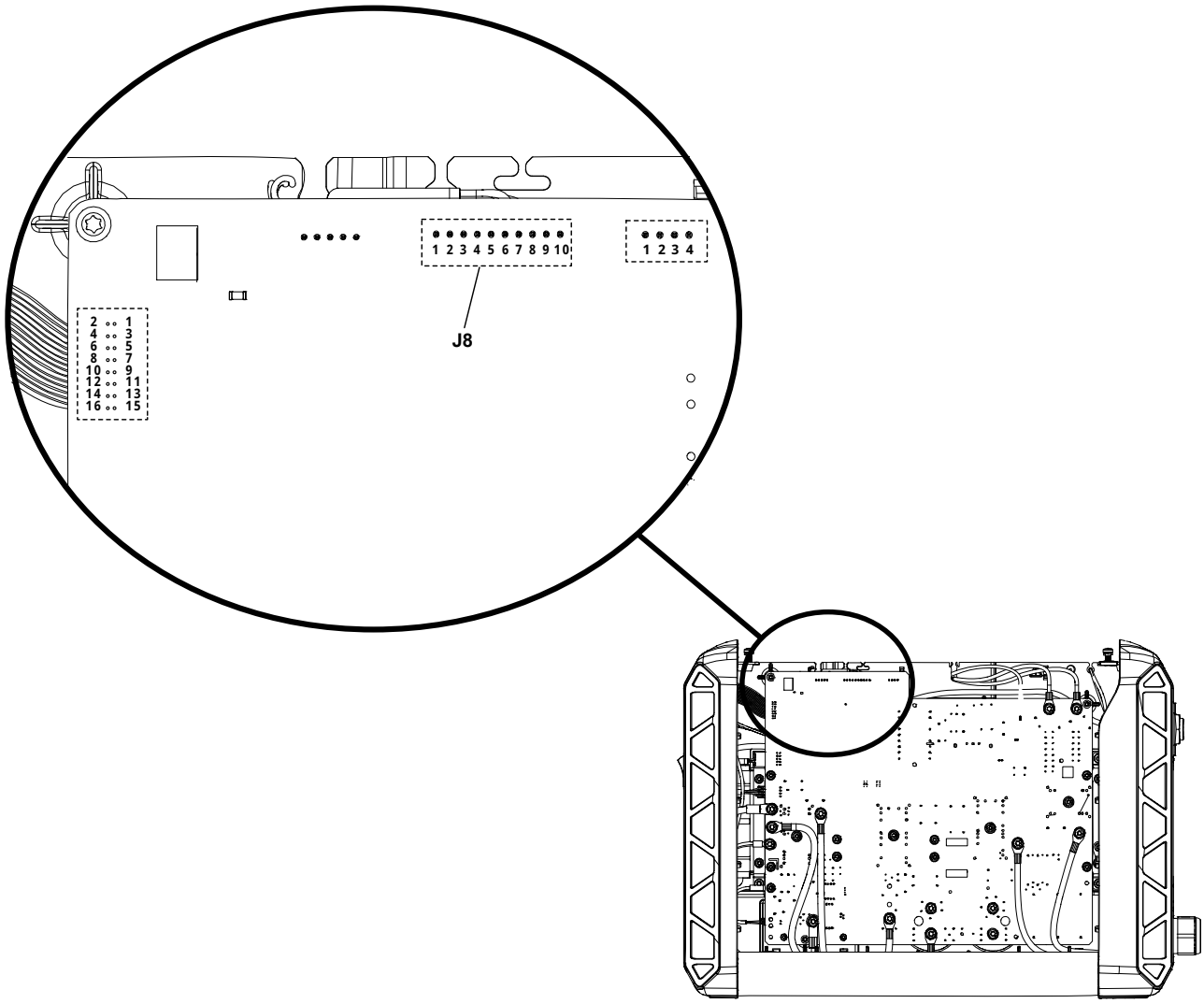

5. Is the voltage approximately 5 VDC?

If yes...	Continue with the next step.
If no...	Replace the power PCB. Refer to Remove the power PCB on page 176.

6. Measure the resistance on the solenoid valve J8 connector:
    a. Make sure that the resistance between pin 5 and pin 6 is approximately 22 Ω (±3 Ω).
    b. Make sure that the resistance between pin 7 and pin 8 is approximately 44 Ω (±5 Ω).

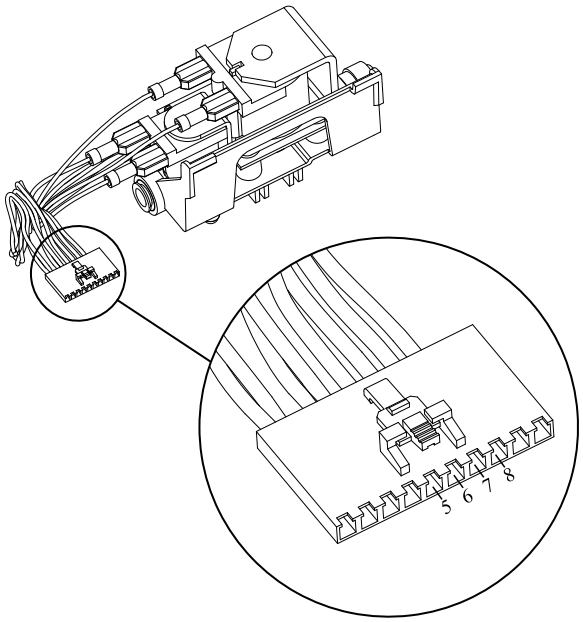

7. Are the resistance values correct?

If yes...	Continue with Corrective action for the solenoid valve sensor and power PCB sensor (2-11-0 and 2-11-1) on page 106.
If no...	Replace the solenoid valve. Refer to Remove the solenoid valve on page 166.

Corrective action for the solenoid valve sensor and power PCB sensor (2-11-0 and 2-11-1)

1. Set the power switch to OFF (**O**).
2. Disconnect the solenoid valve from J8 on the power PCB.

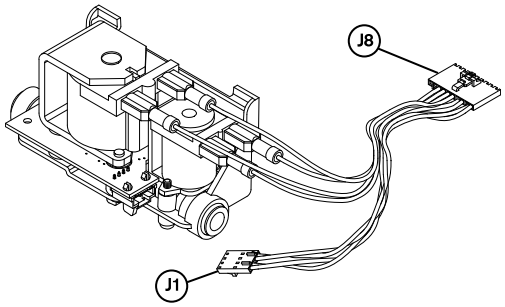

3. Disconnect the J1 connector from the solenoid valve PCB.
4. Do the pins on the connectors or on the solenoid valve PCB have damage?

If yes...	Replace the solenoid valve. Refer to Remove the solenoid valve on page 166.

If no...	Continue with the next step.

5. Reconnect the solenoid valve to J8 on the power PCB.
6. Reconnect J1 to the solenoid valve PCB.
7. Disconnect the gas supply.
8. Set the power switch set to ON (**I**).
9. Measure the voltage between pin 1 and pin 2 on J8.
10. Is the voltage approximately 0.18 V — 0.22 V?

If yes...	Replace the power PCB. Refer to Remove the power PCB on page 176.
If no...	Replace the solenoid valve. Refer to Remove the solenoid valve on page 166.

Troubleshooting for VBUS faults (3-00-0)

A 3-00-0 fault indicates that the DC bus voltage (VBUS) is out of range.

Fault codes and fault LEDs

Fault code	Fault LEDs	Torch LED	Description	Stops the system from operating?
3-00-0	 ON	 Red	The DC bus voltage (VBUS) is out of range.	Yes

Corrective action for VBUS faults using test points (3-00-0)

Do a test of the power PCB to make sure that the circuits are balanced. Use the test points on the power PCB to do the test. There are labels on the rear of the power PCB for the test points (TP1, TP2, TP3).

Use miniature banana plugs to connect to the test points on the power PCB as shown in this procedure. Refer to Required test equipment on page 18.

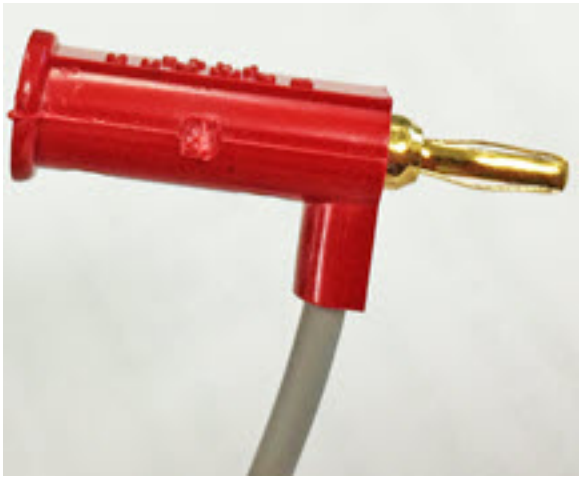

If miniature banana plugs are not available, use small test clips that you can attach to the copper contacts in the test point openings on the power PCB.

NOTICE

DO NOT CONNECT -VBUS TO GROUND

Do not connect -VBUS (TP1) to ground. This can cause damage to the plasma power supply so that it becomes unserviceable.

NOTICE

SHORT CIRCUIT BETWEEN BUS AND HEATSINK IS POSSIBLE

Do not use a multimeter with test leads for this test. This can cause a short-circuit between the BUS and the heatsink. Use mini-banana plugs for this test, and attach them to the test point (TP) openings in the power PCB.

1. Set the power switch to OFF (**O**), disconnect the power cord from the power source, and disconnect the gas supply.
2. Remove the plasma power supply handle and cover.
3. Remove the component barrier.
4. Reconnect the electrical power, but keep the power switch set to OFF (**O**).
5. Measure the voltage between the TP1 and TP2 test points.

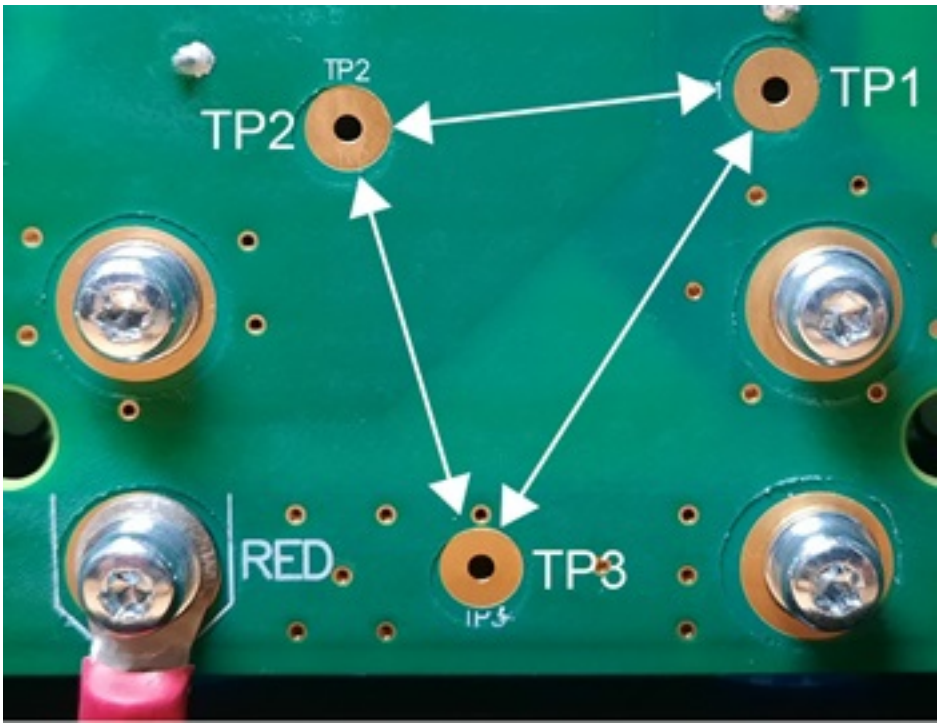

a. Put the mini-banana plugs at TP1 and TP2 on the power PCB.

b. Set the power switch to ON (**I**).

c. Make sure that the voltage is approximately:

- 280 VDC/340 VDC for 200 V/240 V 1-phase models
- 560 VDC for 400 V CE/CCC 3-phase models
- 670 VDC for 480 V CSA 3-phase models

6. Measure the voltage between the TP1 and TP3 test points.

a. Set the power switch to OFF (**O**).

b. Move the mini-banana plugs to TP1 and TP3 on the power PCB.

c. Set the power switch to ON (**I**).

d. Make sure that the value is approximately one-half of the value from step step 5 on page 108:

- 140 VDC/170 VDC for 200 V/240 V 1-phase models
- 280 VDC for 400 V CE/CCC 3-phase models
- 335 VDC for 480 V CSA 3-phase models

All values can be ±10%.

7. Measure the voltage between the TP2 and TP3 test points.
    a. Set the power switch to OFF (**O**).
    b. Move the mini-banana plugs to TP2 and TP3 on the power PCB.
    c. Set the power switch to ON (**I**).
    d. Make sure that the value is approximately one-half of the value from step step 5 on page 108:
        - 140 VDC/170 VDC for 200 V/240 V 1-phase models
        - 280 VDC for 400 V CE/CCC 3-phase models
        - 335 VDC for 480 V CSA 3-phase models
8. Are the voltages in step step 6 on page 109 and step step 7 on page 110 approximately equal, and is the capacitor resistance in the correct range?

If yes...	If you cannot find or correct the problem, a qualified service technician must repair the system. Speak to your distributor or authorized repair facility.
If no...	If the voltage values are different by more than 30 V, and if the capacitor resistance is out of range, replace the power PCB. Refer to Remove the power PCB on page 176.

Corrective action for VBUS faults using the capacitor terminals (3-00-0)

Do a test of the power PCB to make sure that the circuits are balanced. Use the capacitor screws to do the test. There are labels on the rear of the power PCB for the positive (+) and negative (-) capacitor terminals.

⚠ WARNING



ELECTRIC SHOCK CAN KILL

Let the system release internal voltages before you touch the capacitors. The capacitors can hold a charge for several minutes after the system is set to OFF.

1. **Wait approximately 10 minutes for internal voltages to discharge.**
2. Loosen the capacitor screws enough that you can disconnect the capacitors from the power PCB.

3. Measure the resistance across the capacitors, and make sure that the resistance is approximately:
   - 13.5 kiloohms (kΩ) for 1-phase models
   - 18 kiloohms (kΩ) for 3-phase models
4. Do a visual inspection of the capacitors.
5. Replace the capacitors if you do not see white dots in the vent holes next to the capacitors, as shown.

   Always replace both capacitors at the same time.

   Refer to Remove the bulk capacitors on page 187.

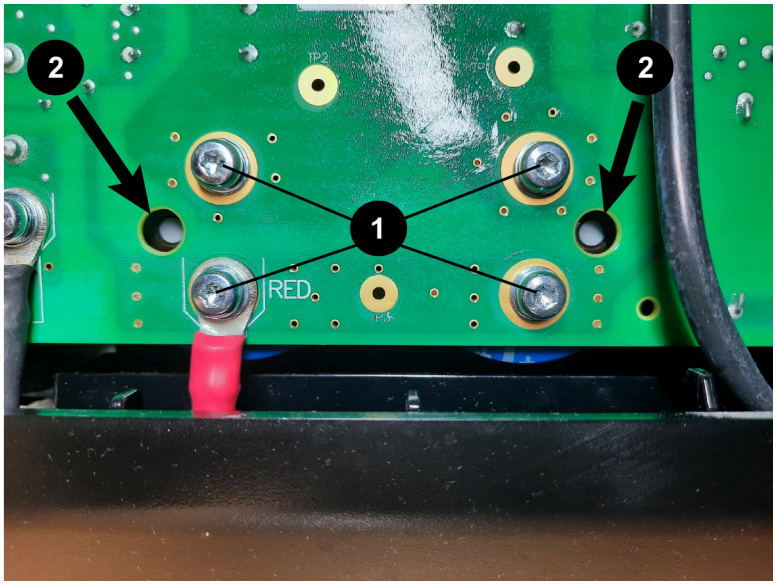

1 Capacitor screws

2 Vent holes

Troubleshooting for fan faults (3-10-n)

A 3-10-0 or 3-10-1 fault code identifies a problem with the system's internal fan.

Fault codes and fault LEDs

Fault code	Fault LEDs	Torch LED	Description	Stops the system from operating?
3-10-0	 ON	 Red	The fan speed is less than the minimum speed.	Yes
3-10-1			The fan is not operating correctly.	

Corrective action for fan faults (3-10-0 and 3-10-1)

1. Set the power switch to OFF (**O**), and disconnect the power cord from the power source.
2. Remove the plasma power supply handle and cover.
3. Remove the component barrier.
4. Clean the fan assembly.
5. Make sure that the J7 fan connector is fully connected to the power PCB.
6. Make sure that the fan wires are not pinched and do not have damage.
7. Remove the fan and fan shroud from the plasma power supply.
8. Use pin 1 (red) and pin 4 (black) on the J7 fan connector, and connect the fan to an external 12 V or 24 V power source.

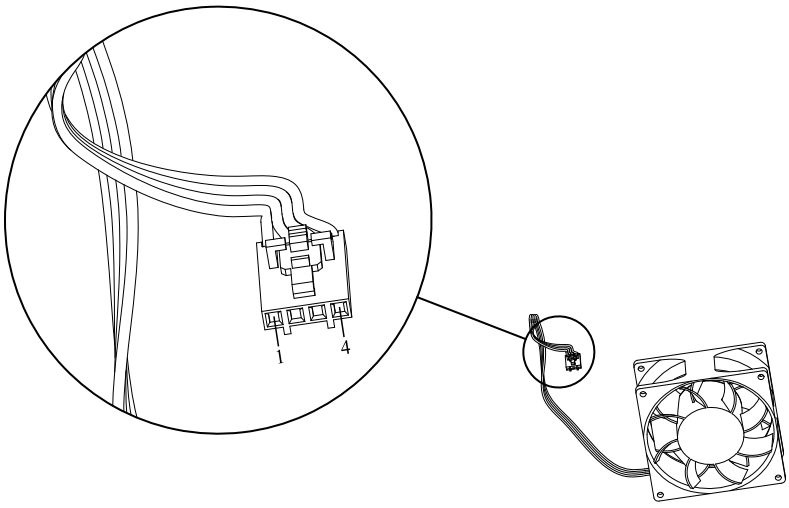

9. Does the fan operate correctly when it is connected to an external power source?

If yes...	Replace the power PCB.
If no...	Replace the fan.

Troubleshooting for PFC module temperature sensor faults (3-11-n)

A 3-11-n fault code indicates a problem with the PFC temperature sensor circuit.

Fault codes and fault LEDs

Fault code	Fault LEDs	Torch LED	Description	Stops the system from operating?
3-11-0	ON AC ON	 Red	The PFC temperature sensor is open.	Yes
3-11-1			The PFC temperature sensor short-circuited.	Yes
3-11-2			No communication with the PFC temperature sensor circuit.	Yes

Corrective action for 3-11-0, 3-11-1, and 3-11-2 faults

1. Perform a cold restart.

   If that does not fix the problem, it is possible that the power PCB failed.

2. Replace the power PCB if necessary.

Troubleshooting for inverter IGBT faults (3-51-1, 3-52-0)

3-51-1 or 3-52-0 fault codes indicate that there is a phase or short circuit problem with the inverter module.

Fault codes and fault LEDs

Fault code	Fault LEDs	Torch LED	Description	Stops the system from operating?
3-51-1	ON	 Red	The inverter IGBT is starting in phase instead of 180° out of phase.	Yes.
3-52-0			A short circuit caused high-current distortion in the inverter IGBT. This is sometimes referred to as a shoot-through.	Yes.

Corrective action for 3-51-1 and 3-52-0 faults

- Replace the power PCB if necessary.

Troubleshooting for a power PCB fault (3-60-0)

A 3-60-0 fault code indicates that the system does not recognize the power PCB.

Fault codes and fault LEDs

Fault code	Fault LEDs	Torch LED	Description	Stops the system from operating?
3-60-0	ON	 Red	The system does not recognize the power PCB.	Yes

Corrective action for 3-60-0 faults

- Make sure that the correct power PCB is installed for the plasma power supply.

  Refer to Plasma power supply interior, power PCB on page 119.

Chapter 4: Service parts

Replacement parts and accessories

Use the part numbers and kit numbers in this section to order replacement parts and accessories for your plasma power supply and torches.

For plasma power supply exterior parts, work leads, work clamps, machine interface kits, serial interface kits, and consumable part numbers, refer to the *Powermax45/65/85/105 SYNC Parts Guide (810490)*.

Plasma power supply, exterior front

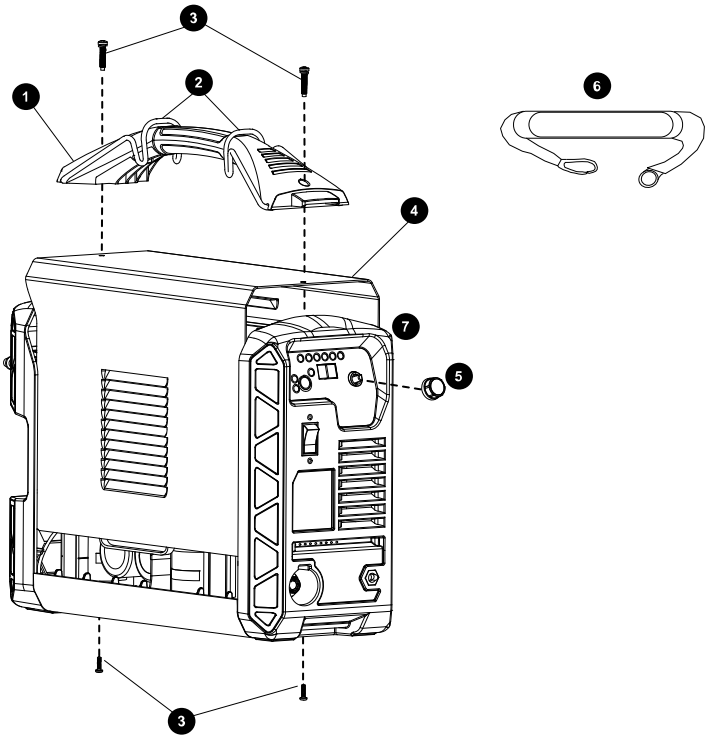

Item	Kit number	Description
1	428663	Kit: Plasma power supply handle with screws (includes clips for shoulder straps)
2	104821	Replacement clips for shoulder strap [1]
3	428662	Kit: Replacement screws for plasma power supply handle, front panel, and rear panel
4	528150	Kit: Plasma power supply cover with labels, CSA (no screws included)
4	528151	Kit: Plasma power supply cover with labels, CE/CCC (no screws included)
5	428143	Kit: Adjustment knob
6	127217	Shoulder strap [2]
7	528136	Kit: Front panel for CSA/CE/CCC 3-phase models
7	528137	Kit: Front panel for CSA/CE/CCC 1-phase models
8	428661	Kit: Rear panel

1 The clips for the shoulder strap come with the system. They are also included in the replacement kit for the plasma power supply handle. They do not come with the shoulder strap itself.

2 Sold separately – not included with the plasma power supply.

Plasma power supply, rear

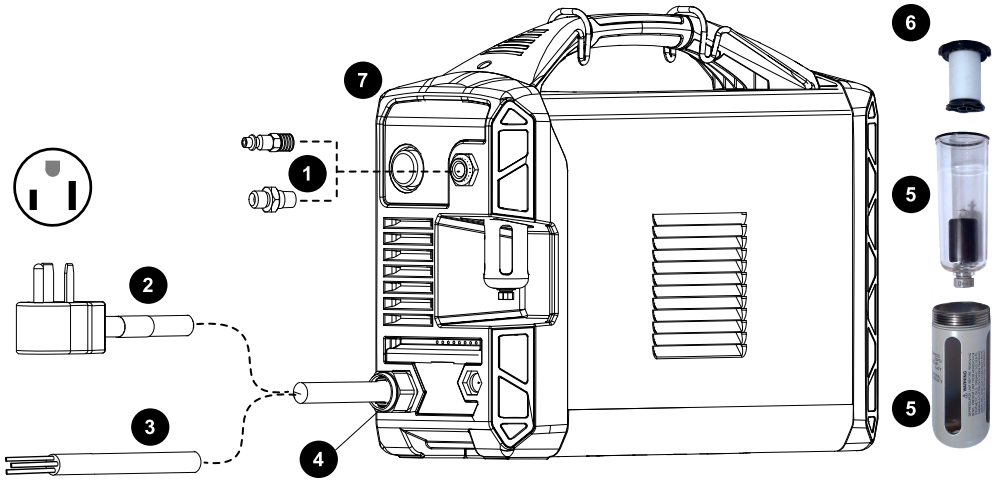

Item	Kit number	Description
1	428685	Kit: Gas inlet fittings: • Industrial interchange quick-disconnect nipple with 1/4 NPT threads • British Pipe Thread adapter G-1/4 BSPP with 1/4 NPT threads
2	428664	Kit: Powermax45 SYNC power cord with strain relief, CSA models, 230 V, 1-phase, 3 m (10 foot) (includes NEMA 6-50P power plug)
3	428667	Kit: Powermax45 SYNC power cord with strain relief, CE models, 230 V, 1-phase, 3 m (10 foot) (no power plug included)
3	428665	Kit: Powermax45 SYNC power cord with strain relief, CSA models, 480 V, 3-phase, 3.5 m (11 foot) (no power plug included)
3	528147	Kit: Powermax45 SYNC power cord with strain relief, CE/CCC models, 400 V, 3-phase, 3 m (10 foot) (no power plug included)
4	228680	Kit: Strain relief for power cords
5	428673	Kit: Air filter bowl (polycarbonate) with metal guard (air filter element sold separately)
6	428378	Kit: Air filter element
7	428661	Kit: Rear panel

Front panel and receptacles, display PCB, power switch

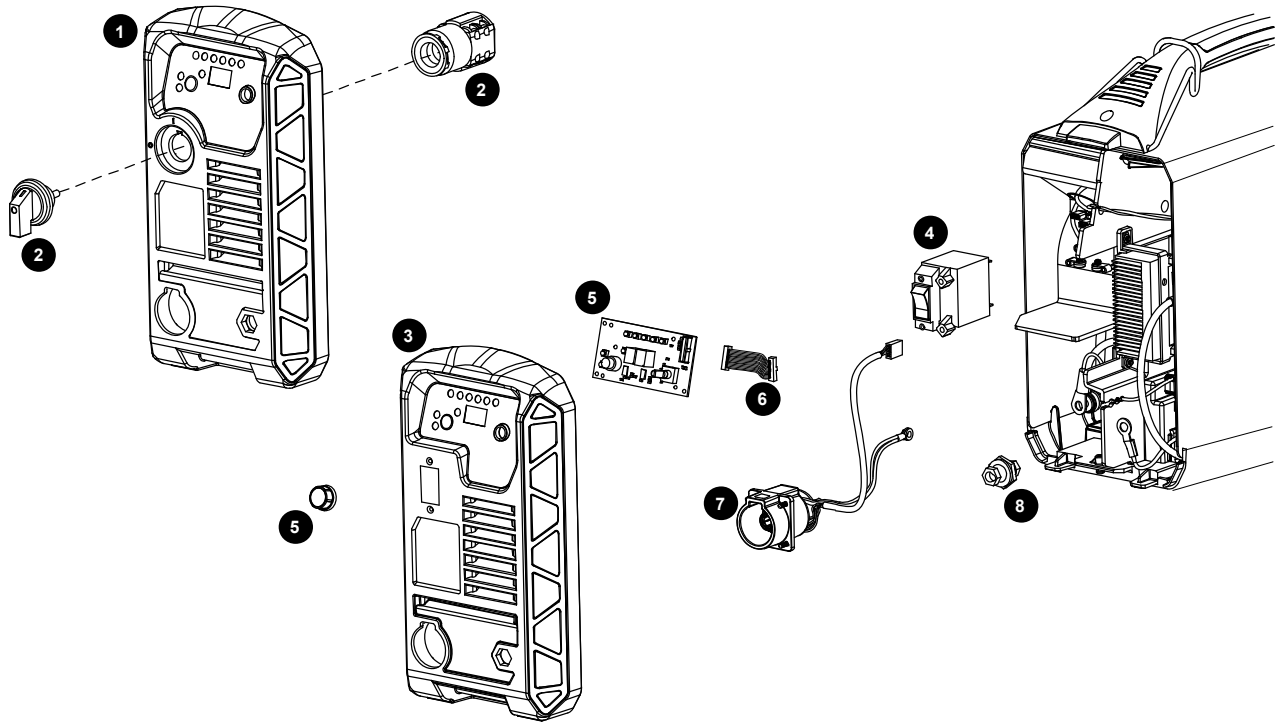

Item	Kit number	Description
1	528136	Kit: Front panel for CSA/CE/CCC 3-phase models
2	428681	Kit: Power switch and knob for 3-phase models (dial switch) (designator: S1)
3	528137	Kit: Front panel for CSA/CE/CCC 1-phase models
4	428680	Kit: Power switch for 1-phase models (rocker switch) (designator: S1)
5	528139	Kit: Display board with adjustment knob (does not include ribbon cable) (designator: PCB1)
6	428709	Kit: Ribbon cable for display board
7	528138	Kit: Quick-disconnect receptacle for torch lead
8	428070	Kit: Work lead receptacle

Plasma power supply interior, power PCB

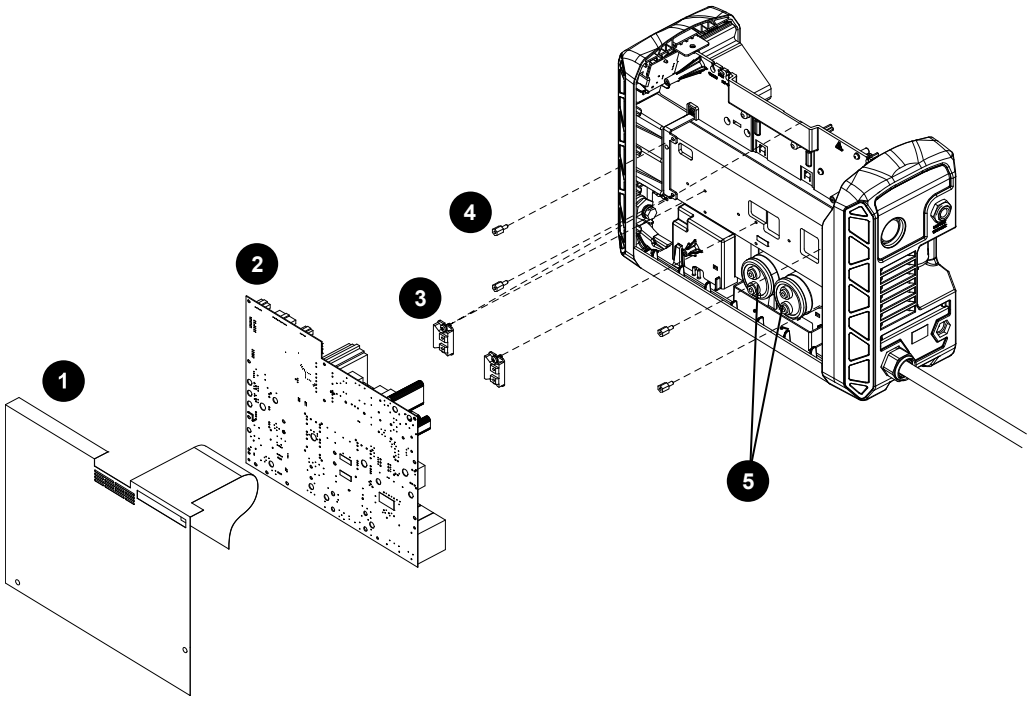

Item	Kit number	Description
1	428672	Kit: Component barrier (insulator)
2	528140	Kit: Power PCB for 200 – 240 V CSA/CE/CCC 1-phase models (designator: PCB3)
2	528141	Kit: Power PCB for 400 V CE/CCC 3-phase models (designator: PCB3)
2	528142	Kit: Power PCB for 480 V CSA 3-phase models (designator: PCB3)
3	428065	Kit: Snubber resistors (2) 10 Ω with thermal grease
4	428411	Kit: Replacement standoffs (5) for power PCB and ground wire
5	228301	Kit: Capacitors (2) for 200 – 240 V CSA/CE/CCC 1-phase power PCBs
5	228426	Kit: Capacitors (2) for 400 V CE/CCC 3-phase power PCBs
5	428080	Kit: Capacitors (2) for 480 V CSA 3-phase power PCBs
	128836	Thermal grease, 1/8 ounce (for electronic components that mount on the heatsink)

Plasma power supply interior, pneumatics and fan

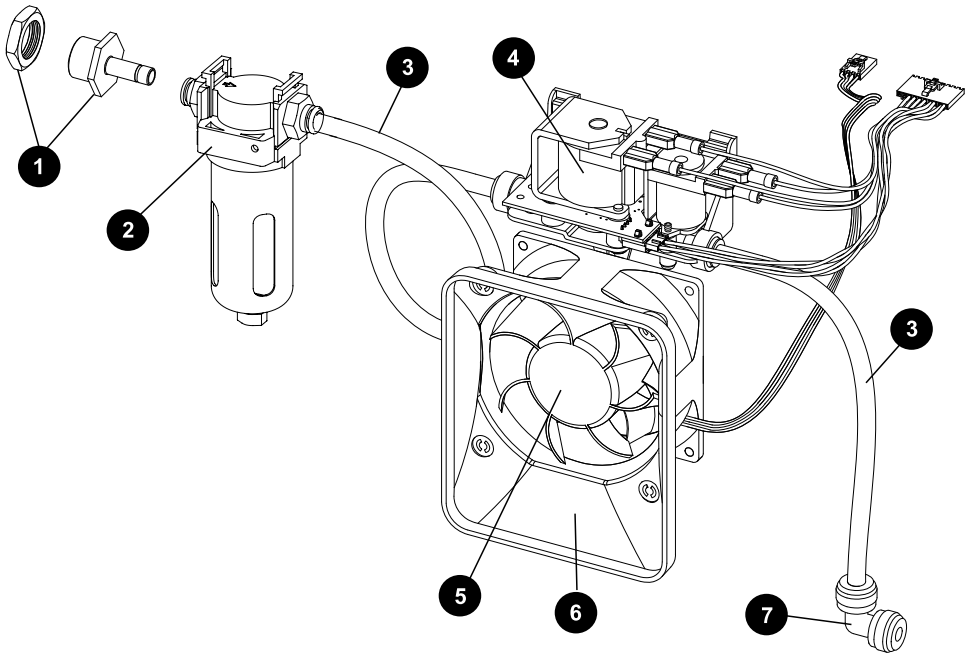

Item	Kit number	Description
1	428732	Kit: 1/4 NPT bulkhead fitting and nut for air filter
2	429248	Kit: Air filter assembly (includes metal guard, filter bowl, filter element, and gas hose)
3	428675	Kit: 2 gas supply hoses
4	428630	Kit: Solenoid valve assembly (includes valve PCB, wiring harness, and both gas supply hoses) (designator: V1)
5	428688	Kit: Fan assembly for 1-phase models (designator: M1)
5	528143	Kit: Fan assembly for 3-phase models (designator: M1)
6	428734	Kit: Plenum for fan
7	428250	Kit: 90° fitting

Plasma power supply interior, wires, CSA 1-phase

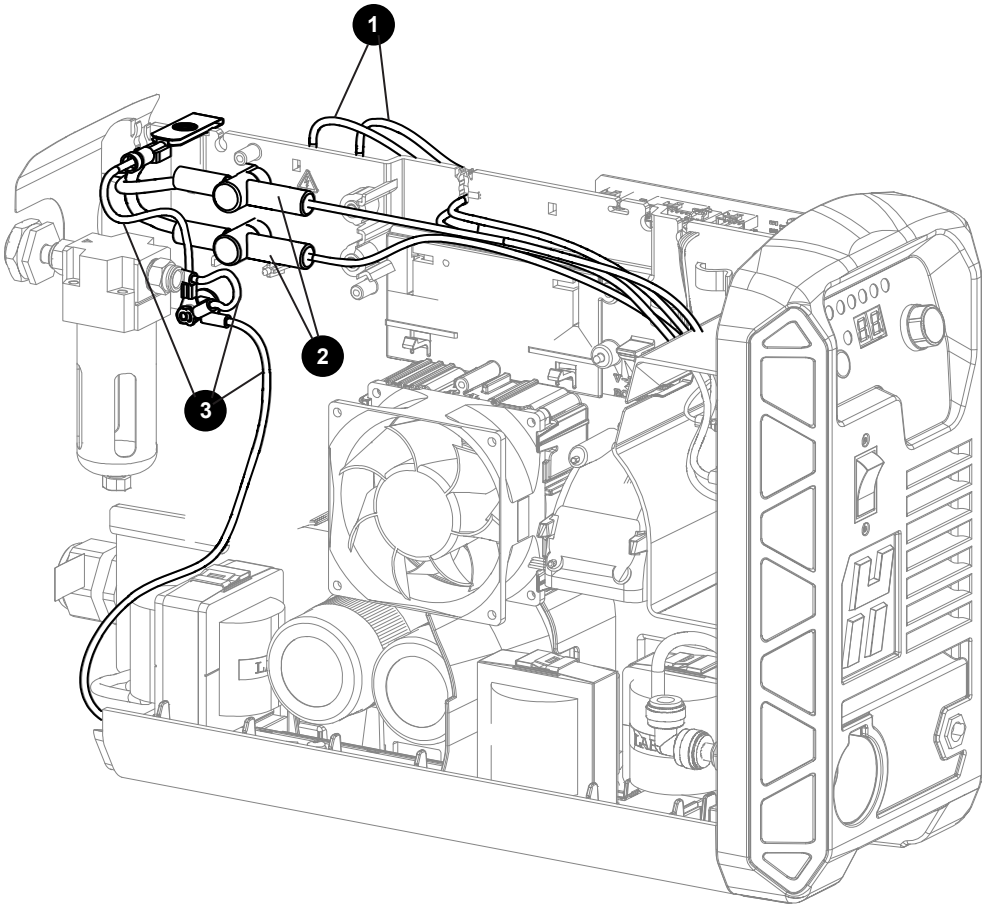

Item	Kit number	Description
	428686	Kit: Wire group for CSA 1-phase models:
1		2 wires from power switch to power PCB (black and white)
2		2 wires from power switch to power cord (CSA) or EMI PCB (CE/CCC) (blue and brown) with protective covers for wire terminals
3		3 ground wires

Plasma power supply interior, wires and EMI PCB, CE/CCC 1-phase

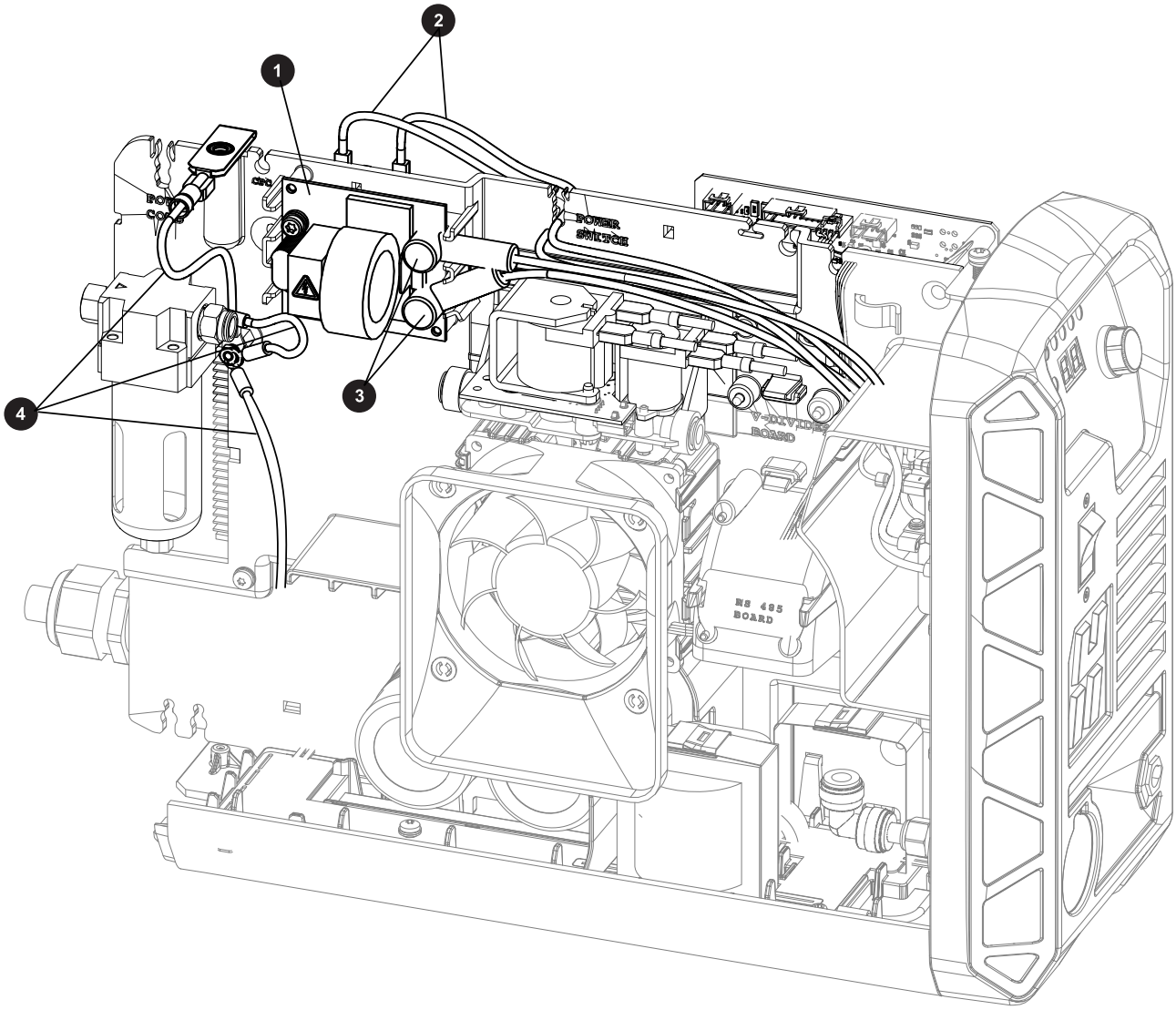

Item	Kit number	Description
1	428721	Kit: EMI PCB for CE/CCC 1-phase models only (includes screws but not wires) (designator: PCB2)
	428686	Kit: Wire group for 1-phase models:
2		2 wires from power switch to power PCB (black and white)
3		2 wires from power switch to power cord (CSA) or EMI PCB (CE/CCC) (blue and brown) with protective covers for wire terminals
4		3 ground wires

Plasma power supply interior, wires, 3-phase

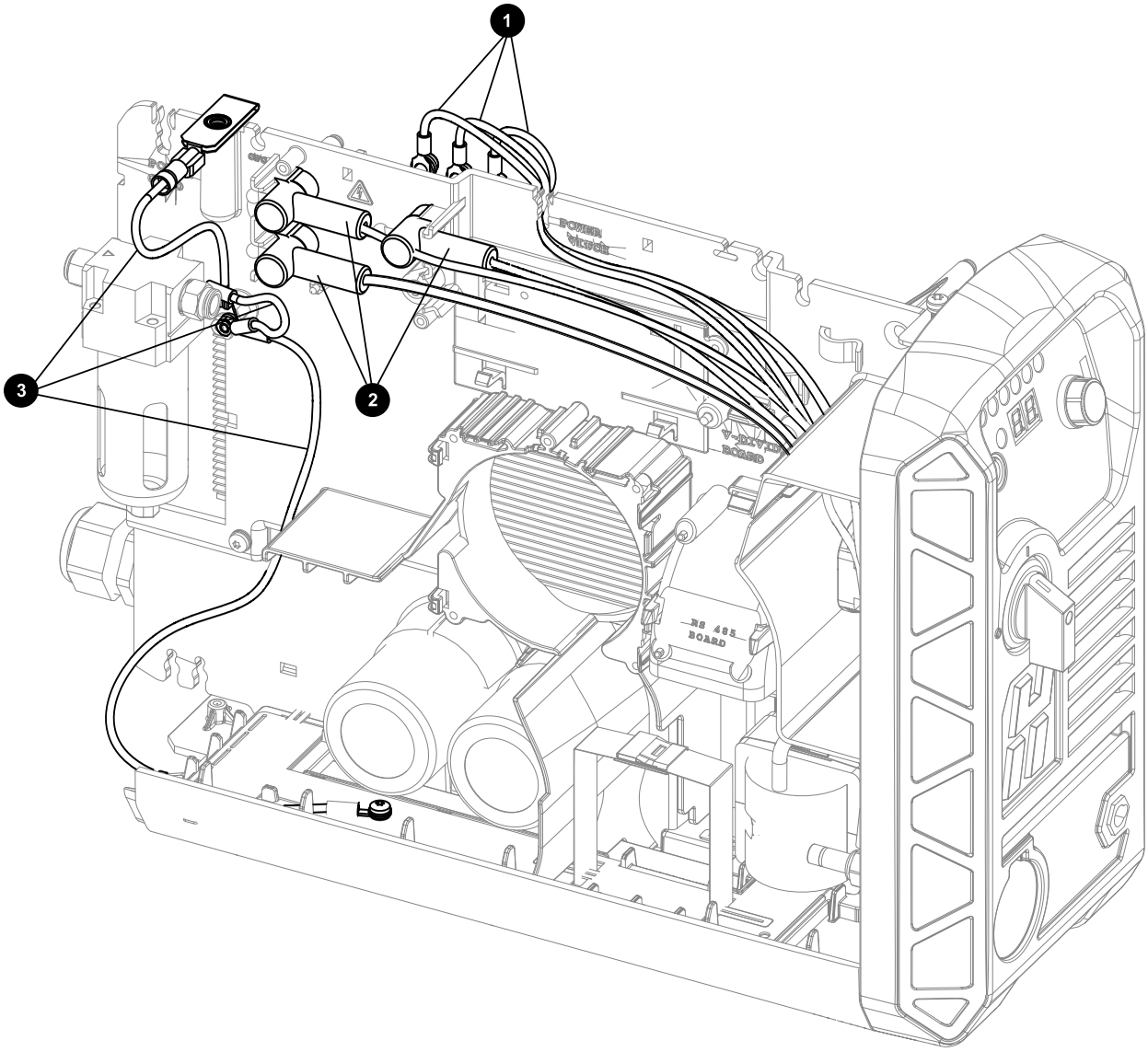

Item	Kit number	Description
	428731	Kit: Wire group for 3-phase models:
1		3 wires from power switch to power PCB (brown with white stripe, white with black stripe, and black with white stripe)
2		3 wires from power switch to power cord (black, white, and brown) with protective covers for wire terminals
3		3 ground wires

Safety critical parts

Genuine Hypertherm parts are factory-recommended parts for your Hypertherm system. Any damage caused by the use of parts that are not from Hypertherm may not be covered by the Hypertherm warranty. In addition, the following parts are safety-critical parts that must be replaced only with genuine Hypertherm parts to maintain the warranty and system certifications, including CE, CSA, and CCC certification.

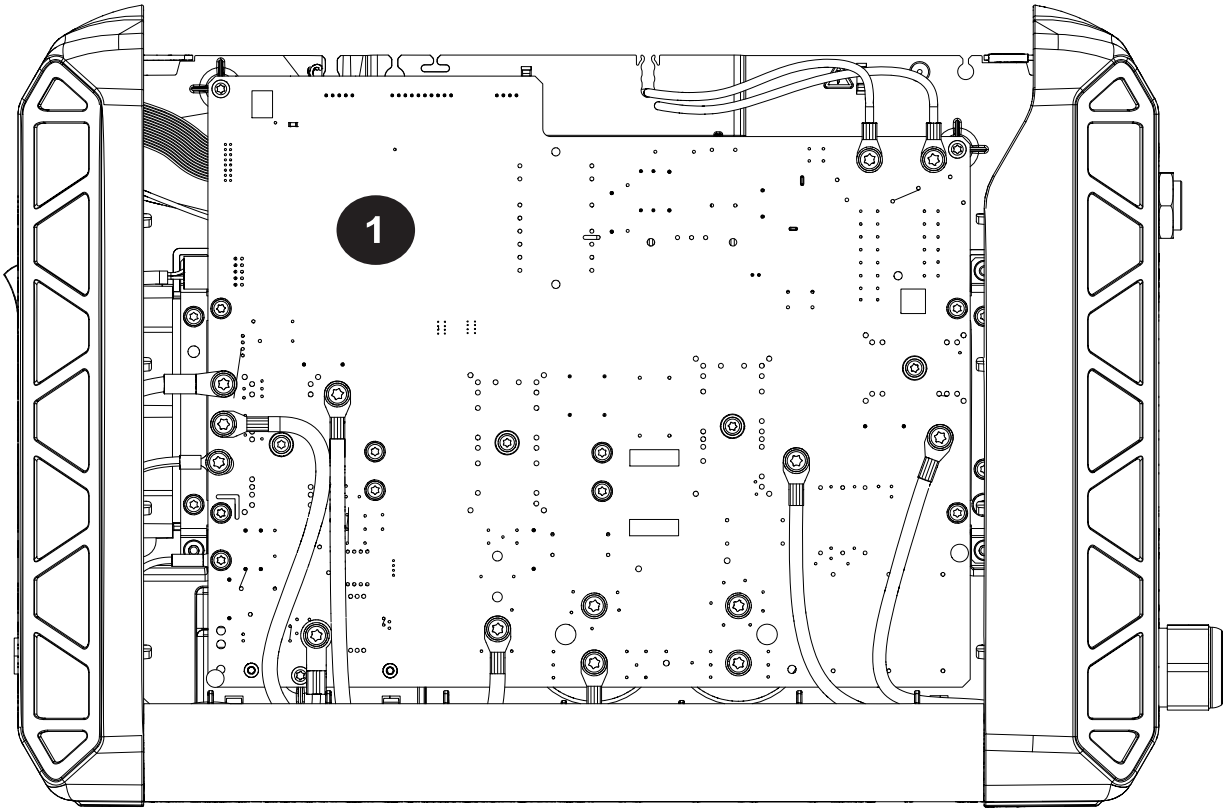

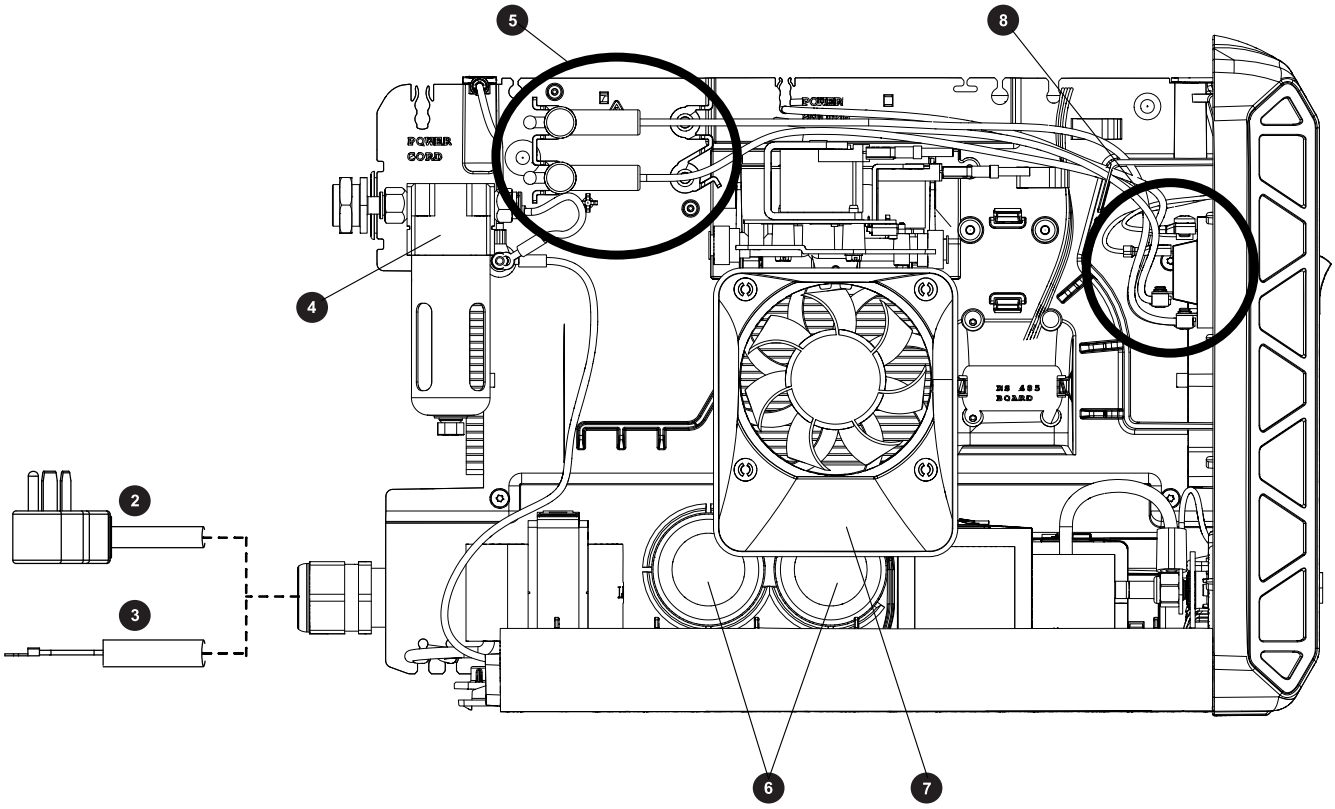

Item	Kit number	Description
(not shown)	528140	Kit: Power PCB for 200 – 240 V CSA/CE/CCC 1-phase models (designator: PCB3)
	528141	Kit: Power PCB for 400 V CE/CCC 3-phase models (designator: PCB3)
	528142	Kit: Power PCB for 480 V CSA 3-phase models (designator: PCB3)
2	428664	Kit: CSA power cord with strain relief, 1-phase, 3 m (10 foot) (includes NEMA 6-50P power plug)
3	428667	Kit: CE/CCC power cord with strain relief, 1-phase, 3 m (10 foot) (no power plug included)
	428665	Kit: CSA power cord with strain relief, 3-phase, 3.5 m (11 foot) (no power plug included)
	528147	Kit: CE/CCC power cord with strain relief, 3-phase, 3 m (10 foot) (no power plug included)
4	429248	Kit: Air filter assembly (includes metal guard, filter bowl, filter element, and gas hose)
5	428721	Kit: EMI PCB for CE/CCC 1-phase models only (includes screws but not wires) (designator: PCB2)

Item	Kit number	Description
6	228301	Kit: Capacitors (2) for 200 – 240 V CSA/CE/CCC 1-phase power boards
	228426	Kit: Capacitors (2) for 400 V CE/CCC 3-phase power PCB
	428080	Kit: Capacitors (2) for 480 V CSA 3-phase power PCB
7	428687	Kit: Fan assembly for 1-phase models (designator: M1)
	528143	Kit: Fan assembly for 3-phase models (designator: M1)
8	428680	Kit: Power switch for 1-phase models (rocker switch) (designator: S1)
	428681	Kit: Power switch and knob for 3-phase models (dial switch) (designator: S1)

Recommended spare parts

Hypertherm recommends that service centers keep the following spare parts on hand for repairs because these parts are critical or are usually subjected to heavy and repeated wear. You may need to revise or expand this list for your customers, based on the conditions and work environments in your region.

Kit number	Description
428143	Kit: Adjustment knob for control panel
223595	Work lead, 7.6 m (25 foot), with work clamp
223596	Work lead, 15 m (50 foot), with work clamp
428680	Kit: Power switch for 1-phase models (rocker switch) (designator: S1)
428681	Kit: Power switch and knob for 3-phase models (dial switch) (designator: S1)
528139	Kit: Display board PCB with adjustment knob (does not include ribbon cable) (designator: PCB1)
428709	Kit: Ribbon cable for display PCB
528140	Kit: Power PCB for 200 – 240 V CSA/CE/CCC 1-phase models (designator: PCB3)
528141	Kit: Power PCB for 400 V CE/CCC 3-phase models (designator: PCB3)
528142	Kit: Power PCB for 480 V CSA 3-phase models (designator: PCB3)
428065	Kit: Snubber resistors (2) 10 Ω with thermal grease
428721	Kit: EMI board for CE/CCC 1-phase models only (includes screws but not wires) (designator: PCB2)
228301	Kit: Capacitors (2) for 200 – 240 V CSA/CE/CCC 1-phase power PCB

Kit number	Description
228426	Kit: Capacitors (2) for 400 V CE/CCC 3-phase power PCB
428080	Kit: Capacitors (2) for 480 V CSA 3-phase power PCB
429248	Kit: Air filter assembly (includes metal guard, filter bowl, filter element, and gas hose)
428378	Kit: Air filter element
428688	Kit: Fan assembly for 1-phase models (designator: M1)
528143	Kit: Fan assembly for 3-phase models (designator: M1)
428630	Kit: Solenoid valve assembly (includes valve PCB, wiring harness, and both gas supply hoses) (designator: V1)
027055	Silicone lubricant, 1/4 ounce (for O-ring on torch body and air filter bowl)
128836	Thermal grease, 1/8 ounce (for electronic components that mount on heatsink)

Powermax45 SYNC labels

For label kits, decals for side panels, and consumable labels, refer to the *Powermax45/65/85/105 Parts Guide* (810490).

Data plate

The data plate on the bottom of the plasma power supply contains 2 sets of ratings:

- The HYP ratings are Hypertherm plasma power supply ratings. They reflect the capability of the system based on Hypertherm's internal testing.
- The International Electrotechnical Commission (IEC) ratings are predefined minimum thresholds that the system was required to meet to fulfill IEC standard 60974-1.

CSA and CE/CCC data plates differ slightly.

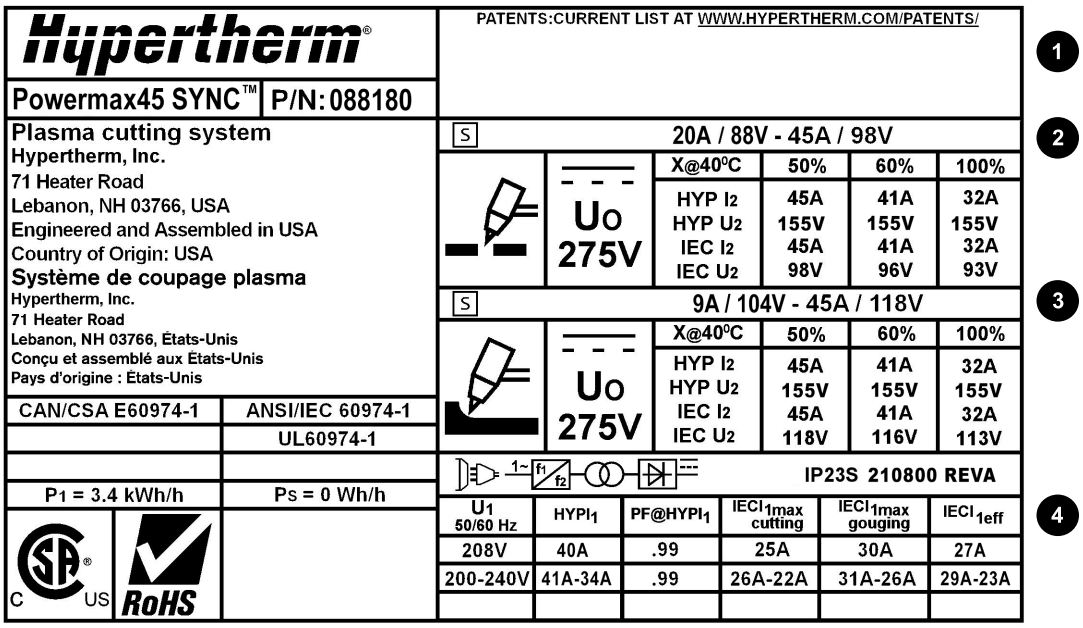

Callout	Description	Symbols	Description
1	Serial number, barcode, and date made.	U_0	Rated no load voltage (V)
2	Plasma cutting ratings	**X**	Duty cycle (%)
3	Plasma gouging ratings	**HYP**	Hypertherm internal rating
4	Symbol for plasma cutting	**IEC**	International Electrotechnical Commission rating
		I_2	Conventional welding current (A)
		U_2	Conventional welding voltage (V)
		IP	Ingress Protection (IP) rating
		U_1	Input voltage (V)
		I_1	Input current (A)
		PF	Power factor

Safety and EMC symbols and marks

You can see different safety and EMC symbols and marks on your system. Each image identifies a specific regional certification.

Your product may have one or more of the following marks on or near the data plate. Because of differences and conflicts in national regulations, not all marks are applied to every version of a product.



S mark

The S mark indicates that the power supply and torch are suitable for operations carried out in environments with increased hazard of electrical shock according to IEC 60974-1.



CSA mark

Products with a CSA mark meet the United States and Canadian regulations for product safety. The products were evaluated, tested, and certified by CSA-International. Alternatively, the product may have a mark by one of the other Nationally Recognized Testing Laboratories (NRTL) accredited in both the United States and Canada, such as UL or TÜV.



CE mark

The CE marking signifies the manufacturer’s declaration of conformity to applicable European directives and standards. Only those versions of products with a CE marking located on or near the data plate comply with European Directives. Applicable directives may include the European Low Voltage Directive, the European Electromagnetic Compatibility (EMC) Directive, the Radio Equipment Directive (RED), and the Restriction of Hazardous Substances (RoHS) Directive. See the European CE Declaration of Conformity for details.



Eurasian Customs Union (CU) mark

CE versions of products that include an EAC mark of conformity meet the product safety and EMC requirements for export to Russia, Belarus, and Kazakhstan.



RCM mark

CE versions of products with an RCM mark comply with the EMC and safety regulations required for sale in Australia and New Zealand.



CCC mark

The China Compulsory Certification (CCC) mark indicates that the product has been tested and found compliant with product safety regulations required for sale in China.



UkrSEPRO mark

The CE versions of products that include a UkrSEPRO mark of conformity meet the product safety and EMC requirements for export to the Ukraine.



Serbian AAA mark

CE versions of products that include a AAA Serbian mark meet the product safety and EMC requirements for export to Serbia.



RoHS mark

The RoHS mark indicates that the product meets the requirements of the European Restriction of Hazardous Substances (RoHS) Directive.



United Kingdom Conformity Assessed mark

CE versions of products that include a UKCA mark of conformity meet the product safety, EMC, RF, and RoHS requirements for export to the UK.

IEC symbols

You can see different IEC symbols on the system. Each image has a specific meaning in the context of operating a plasma cutting system.

The following symbols can appear on the data plate, control labels, and switches.



Direct current (DC)



Alternating current (AC)



Plasma torch cutting



Gouging



AC input power connection



The terminal for the external protective (earth) (PE) conductor

Power is ON



Power is OFF

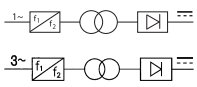

A 1-phase or 3-phase inverter-based power source



Volt/amperage curve, “drooping” characteristic

Chapter 5: Service procedures for the cover, panels, and connectors

Plasma power supply component replacement safety information

⚠ WARNING



ELECTRIC SHOCK CAN KILL

The plasma power supply contains dangerous electric voltages that can seriously injure or kill you. Even if the plasma power supply is turned OFF, you can still get a serious electric shock if the plasma power supply remains connected to an electric power source.

Use extreme caution if you do diagnosis or maintenance tasks when the plasma power supply remains connected to an electric power source and the outer cover or panels are removed. All work that requires removal of the plasma power supply outer cover or panels must be done by a qualified technician. Refer to the *Safety and Compliance Manual (80669C)* for more safety information.

NOTICE

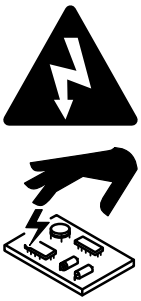

STATIC ELECTRICITY CAN DAMAGE PRINTED CIRCUIT BOARDS

Use precautions when handling printed circuit boards (PCBs) to protect them from static electricity. Correct PCB handling includes the following steps:

- Store PCBs in anti-static containers.
- Wear a grounded wrist strap when handling PCBs.

Replace the plasma power supply cover and handle

Remove the plasma power supply cover and handle

1. Set the power switch to OFF (**O**), disconnect the power cord from the power source, and disconnect the gas supply.
2. Remove the 2 screws from the plasma power supply handle.

   You may need to gently pull up on the handle to remove the screws.
3. Remove the 2 screws from the bottom of the front and rear panels.
4. Gently tilt the tops of the front and rear panels away from the unit to pull the handle out.

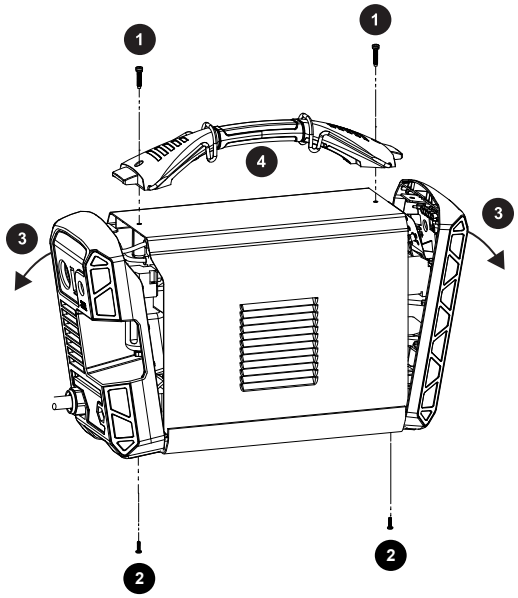

5. Slide the cover off.

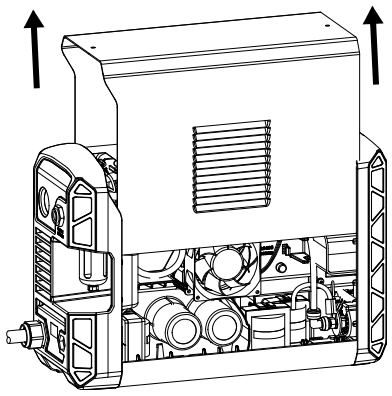

Install the plasma power supply cover and handle

1. Set the front and rear panels in place.
2. Make sure the ground clip is connected to the ground wire.

   The clip should be set in place to accept the screw from the handle.

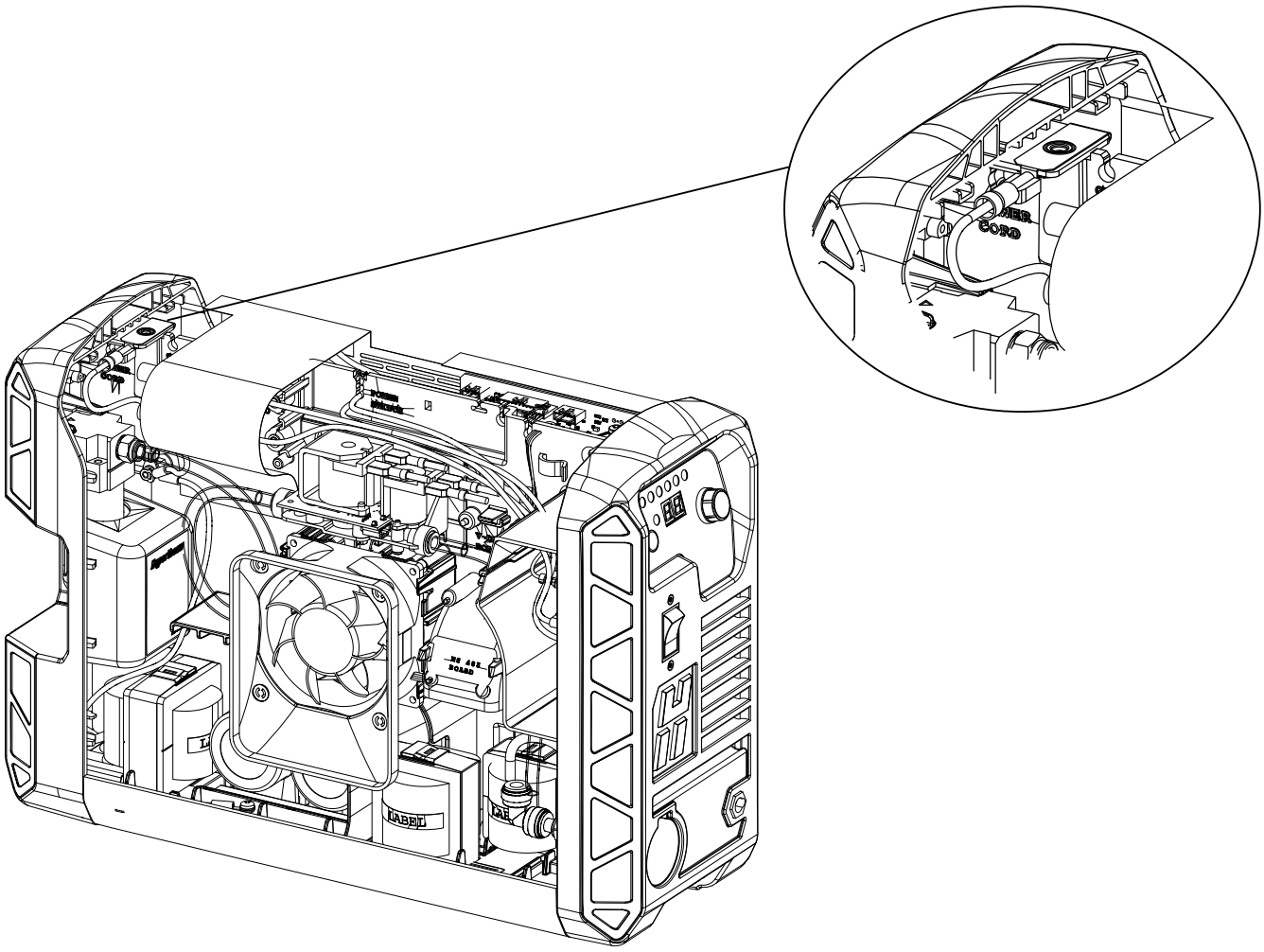

3. Make sure the component barrier is in place and secured to the main power PCB with 2 plastic pins.

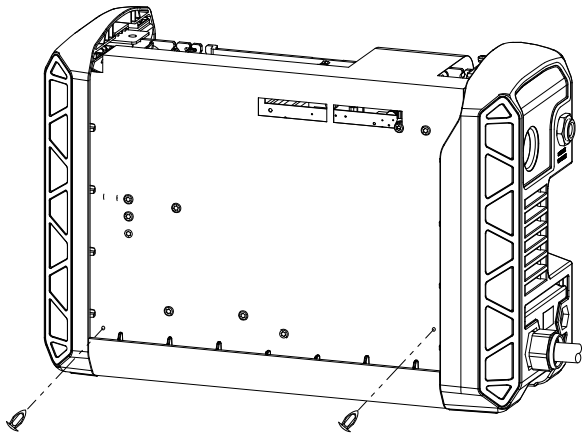

4. Slide the cover back on.

    - Make sure the louvers in the cover align with the fan.

- Be careful not to pinch any wires.

5. Tilt the front and rear panels to reattach the handle.

   Make sure to put the handle over the holes in the top of the cover and put the ends of the handle below the edges of the panels.

6. Install the 2 screws that secure the bottom of the front panel and rear panel and tighten to 1.7 N·m (15 lbf·in).
7. Install the 2 screws that attach the cover and handle and tighten to 2.3 N·m (20 lbf·in).
8. Reconnect the gas supply and the power cord.

Replace the component barrier

Remove the component barrier

1. Set the power switch to OFF (**O**), disconnect the power cord from the power source, and disconnect the gas supply.
2. Remove the plasma power supply cover and handle on page 133.
3. Remove the 2 plastic pins that secure the component barrier to the main power PCB.

   Slide the component barrier off.

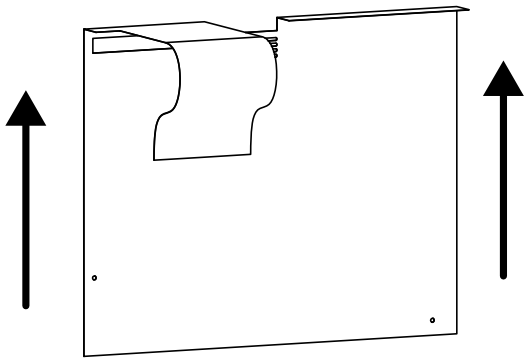

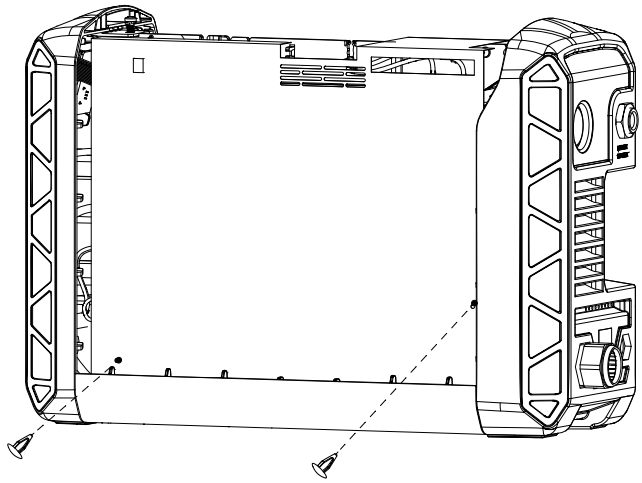

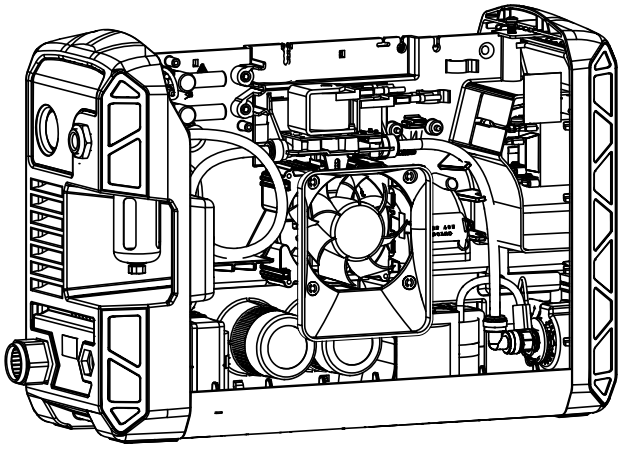

Install the component barrier

1. Set the component barrier in place.

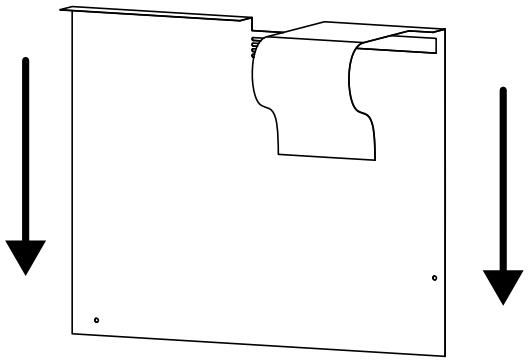

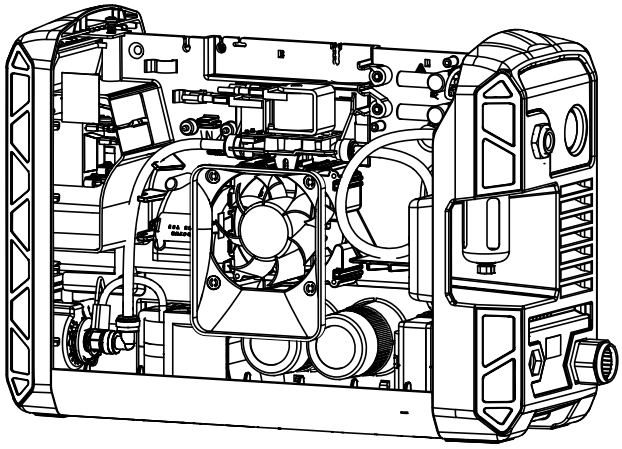

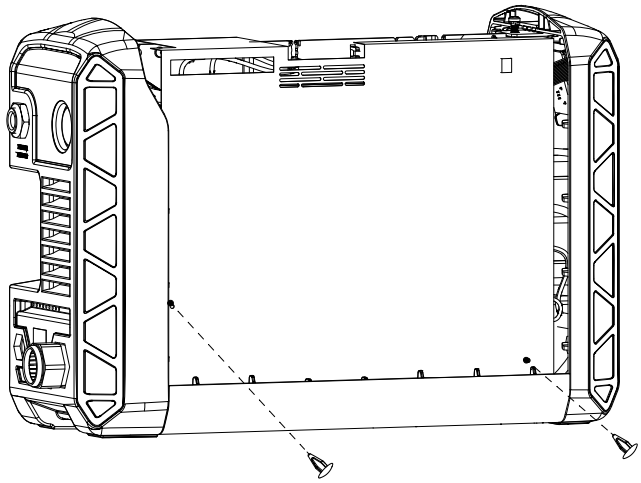

2. Secure the component barrier to the main power PCB with the 2 plastic pins.
3. Wrap the extended portion over the power cord connection points and behind the air hose.

If the machine interface port and RS-485 serial interface are installed, it may be easier to tuck the extended portion of the barrier into the middle of the gas hose loop.

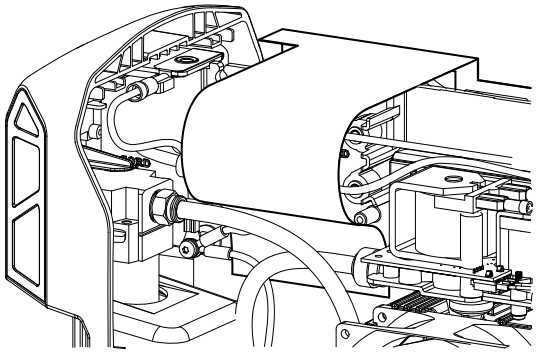

4. Complete the following procedures:
    a. Install the plasma power supply cover and handle on page 134.
    b. Reconnect the gas supply and the power cord.

Remove and install the front panel

Loosen the front panel

Some repairs only require you to loosen the front panel from the plasma power supply. Other repairs require that you remove the front panel from the plasma power supply. To completely remove the front panel, refer to Remove the front panel on page 140.

1. Set the power switch to OFF (**O**), disconnect the power cord from the power source, and disconnect the gas supply.
2. Disconnect the torch and the work lead from the front panel.
3. Remove the plasma power supply cover and handle on page 133.
4. Use a T15 TORX® driver to remove the screw at the bottom center of the panel.
5. Use a blade screwdriver to push in the 2 tabs at the bottom of the panel until the panel detaches from the base.

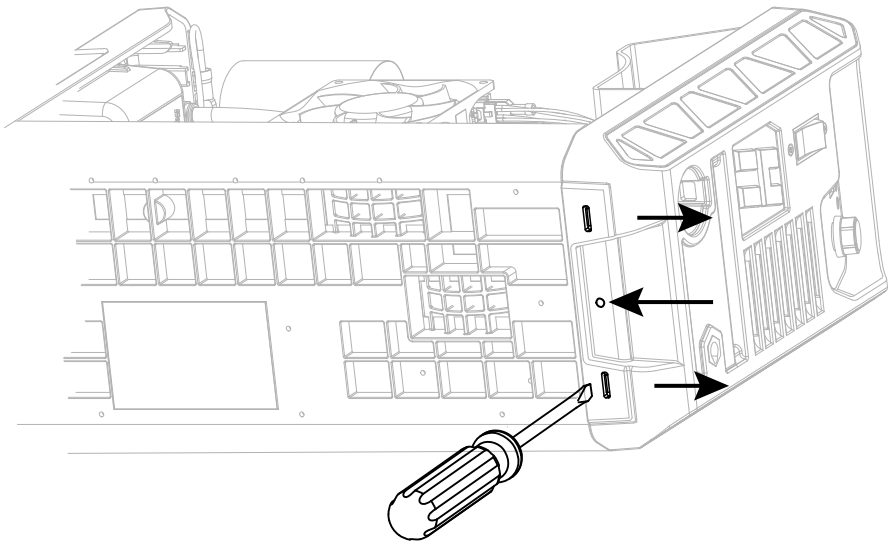

6. Pull the front panel slightly away from the unit.

Remove the front panel

To separate and remove the front panel from the plasma power supply, complete this procedure.

Figure 1 - Front panel parts

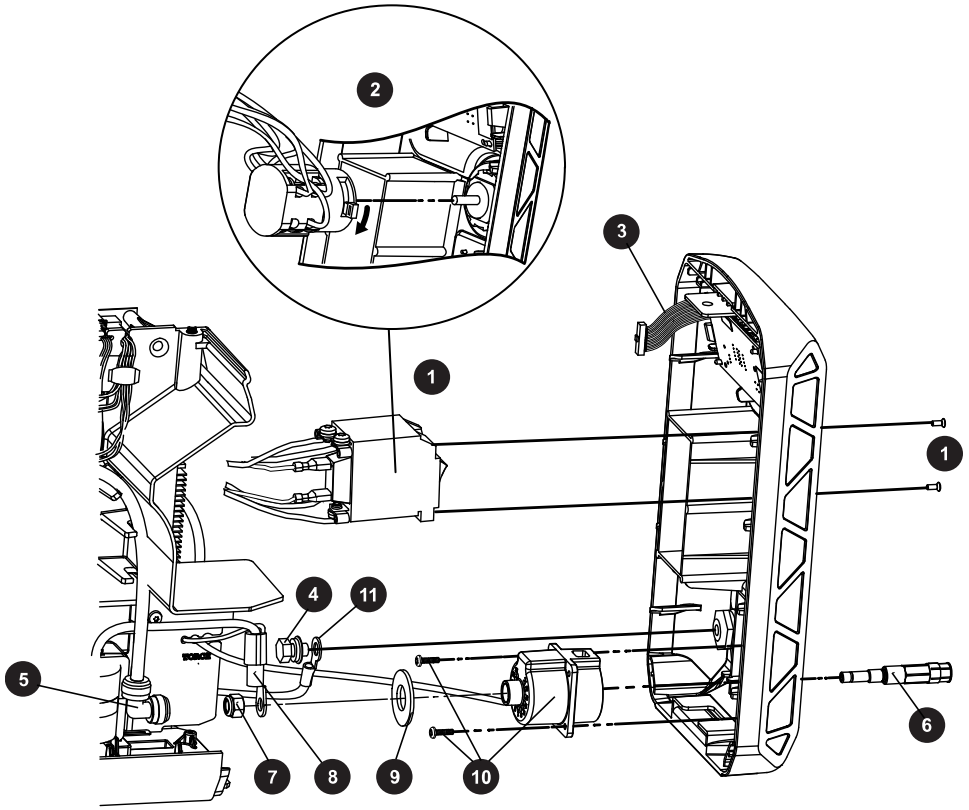

1	1-phase power switch	**7**	Torch receptacle nut
2	3-phase power switch	**8**	Transformer wire
3	Display PCB ribbon cable	**9**	Torch receptacle plastic washer
4	Work lead screw and washers	**10**	Torch receptacle and screws
5	Gas supply hose 90° fitting	**11**	Work lead
6	Brass torch fitting		

1. Loosen the front panel on page 139.
2. Separate the power switch from the front panel.
    - ☐ **1-phase models:** Remove the 2 screws that secure the power switch to the panel.

- **3-phase models:** Hold down the red latch on the power switch body, and pull the assembly out from the shaft on the knob.

3. Disconnect the display board ribbon cable from the main power PCB.
4. Push-to-disconnect the gas supply hose 90° fitting from the brass torch fitting.
5. Unscrew the nut, and remove the transformer wire and the large plastic washer from the fitting.
6. Remove the 2 screws that secure the torch receptacle to the front panel.
7. Remove the screw and washers that secure the work lead wire to the work lead receptacle.

Attach the front panel

Figure 2 - Front panel parts

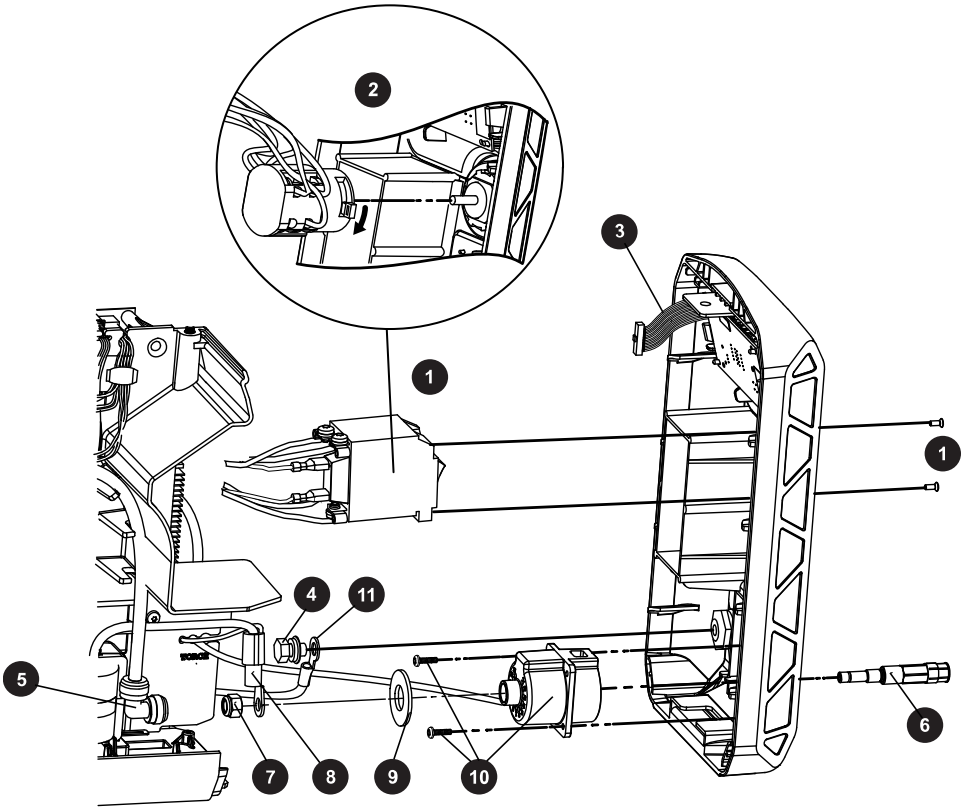

1	1-phase power switch	**7**	Torch receptacle nut
2	3-phase power switch	**8**	Transformer wire
3	Display PCB ribbon cable	**9**	Torch receptacle plastic washer
4	Work lead screw and washers	**10**	Torch receptacle and screws
5	Gas supply hose 90° fitting	**11**	Work lead
6	Brass torch fitting		

1. Attach the screw and washers to secure the work lead wire to the work lead receptacle.

   Tighten to 10.2 N·m (90 lbf·in).
2. Put the torch receptacle into place in the front panel so the red wires are at the top.
3. Screw the torch receptacle to the front panel.

   If there are only 2 screws, mount them at opposite corners. Tighten to 1.7 N·m (15 lbf·in).
4. Place the brass torch fitting into the torch receptacle.

   The fitting slides in from the front of the connector.

5. Slide the large plastic washer over the brass torch fitting.
6. Slide the transformer wire ring terminal over the brass torch fitting.
7. Screw the nut onto the brass torch fitting.

   Tighten to 9.2 N·m (80 lbf·in).
8. Push-to-connect the gas supply hose 90° fitting to the brass torch fitting.
9. Attach the power switch to the front panel:

   - **1-phase models:** Attach the power switch assembly to the front panel using 2 screws. Tighten to 1.1 N·m (10 lbf·in).
   - **3-phase models:** Set the knob to the ON (**I**) position. Press the switch assembly onto the shaft of the power switch knob. The red latch should be in the "LOCK" position as shown. Press until the assembly clicks and is securely held in place.



10. Set the front panel into place so the tabs at the bottom snap into place.

    Make sure no wires are pinched as you put the panel back in place.
11. Complete the following procedures:

    a. Install the plasma power supply cover and handle on page 134.

    b. Reconnect the torch and the work lead to the front panel.

    c. Reconnect the gas supply and the power cord.

Remove and install the rear panel

Loosen the rear panel

Some repairs only require you to loosen the rear panel from the plasma power supply. Other repairs require that you remove the rear panel from the plasma power supply. To completely remove the rear panel, refer to Remove the rear panel on page 144.

1. Set the power switch to OFF (**O**), Disconnect the power cord from the power source, and disconnect the gas supply.
2. Remove the plasma power supply cover and handle on page 133.
3. Use a T15 TORX driver to remove the screw at the bottom center of the panel.
4. Use a blade screwdriver to push in the 2 tabs at the bottom of the panel until the panel detaches from the base.

   Pull the rear panel slightly away from the unit.

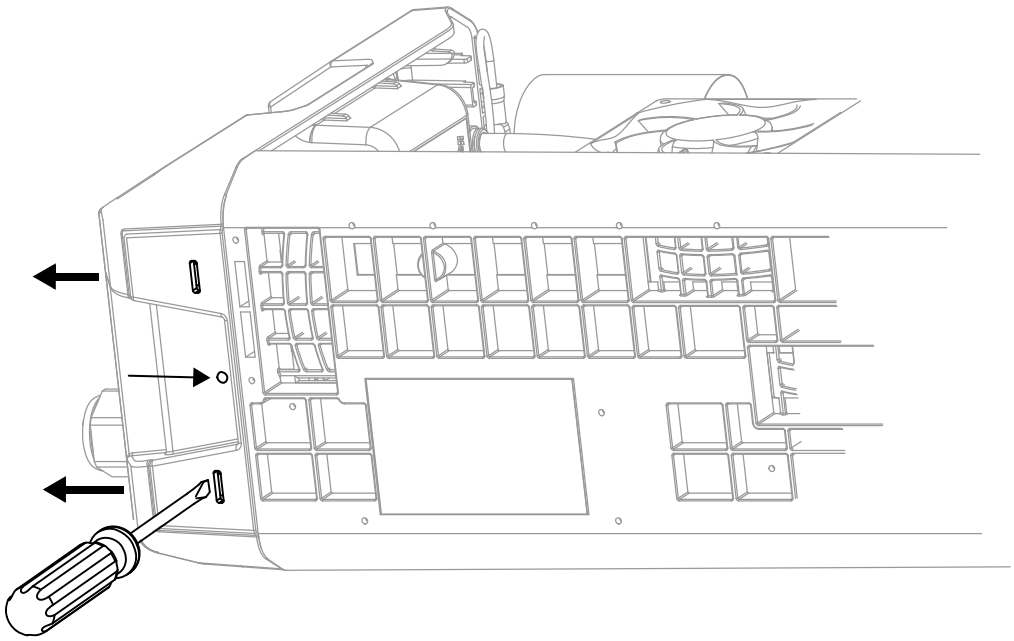

Remove the rear panel

To separate and remove the rear panel from the plasma power supply, complete this procedure.

1. Loosen the rear panel on page 144.
2. Push-to-disconnect the gas supply hose from the air filter assembly.

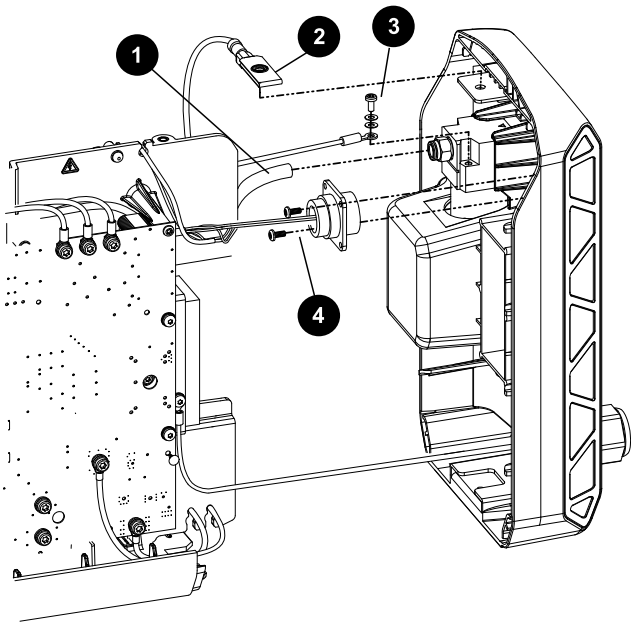

1 Gas supply hose

2 Ground clip

3 Ground wire

4 Machine interface port screws

3. Disconnect the ground clip from the rear panel tab.
4. Disconnect the ground wire from the air filter assembly.
5. Unplug the serial cable from the RS-485 PCB if installed (not shown).
6. Remove the 2 screws that attach the machine interface port to the rear panel if installed. Remove the connector from the panel.
7. Remove the power cord ground wire from the heatsink.

Figure 3 - Power cord connection points

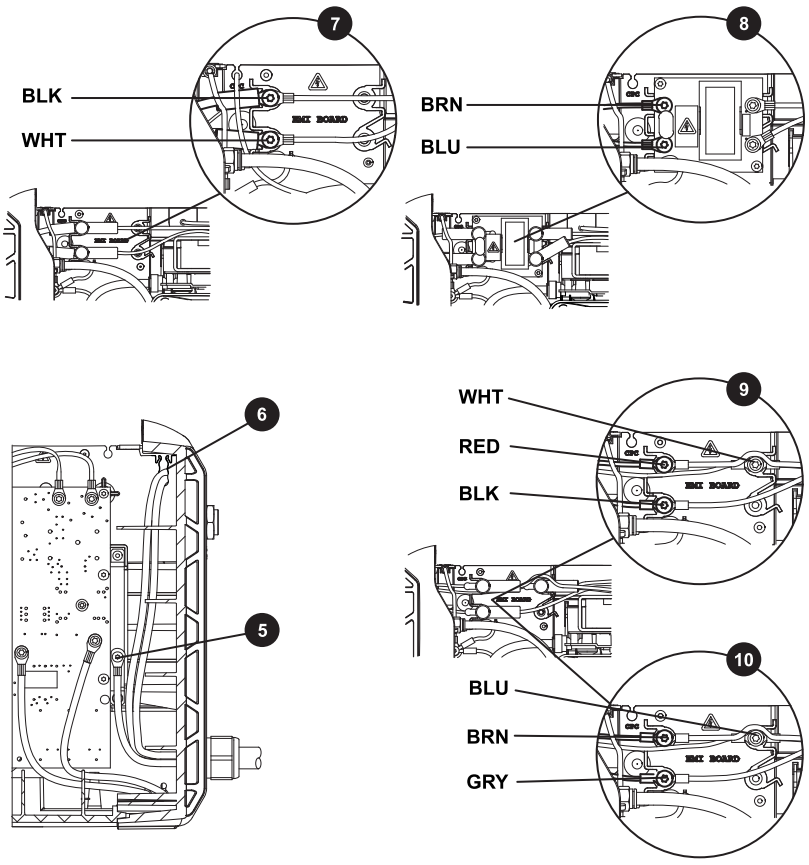

5	Power cord ground wire to heatsink	**8**	CE/CCC 1-phase
6	Power cord pass-through	**9**	CSA 3-phase
7	CSA 1-phase	**10**	CE/CCC 3-phase

8. Remove the red insulating covers, and unscrew the power cord connection points.

   Pull the wires through the center panel grommet.

   a. Disconnect 2 wires for the 1-phase models:

      - CSA models: wires are black (BLK) and white (WHT).
      - CE/CCC models: wires are brown (BRN) and blue (BLU).

   b. Disconnect 3 wires for the 3-phase models:

      - CSA models: wires are white (WHT), red (RED), and black (BLK).
      - CE/CCC models: wires are blue (BLU), brown (BRN), and gray (GRY).

9. Separate the rear panel assembly from the unit.

Attach the rear panel

1. Attach the power cord ground wire to the heatsink.

   Tighten to 2.3 N·m (20 lbf·in).

2. Run the remaining power cord wires through the center panel slot.
3. Attach the power cord leads to the appropriate terminal.

   Tighten to 2.3 N·m (20 lbf·in).

Figure 4 - Power cord connection points

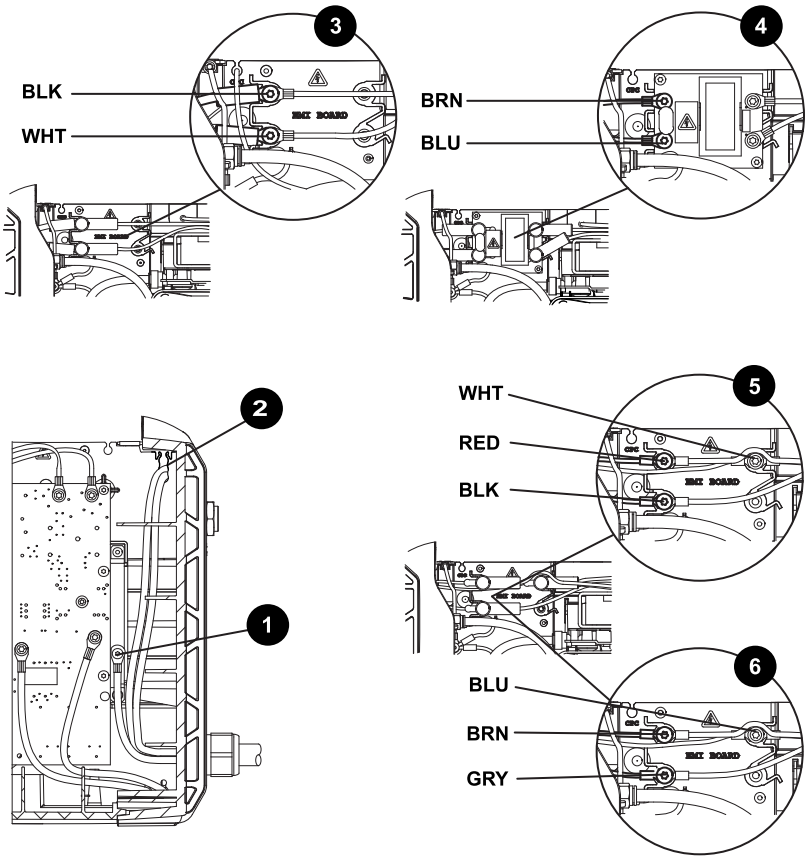

1	Power cord ground wire to heatsink	**4**	CE/CCC 1-phase
2	Power cord pass-through	**5**	CSA 3-phase
3	CSA 1-phase	**6**	CE/CCC 3-phase

   a. Connect 2 wires for the 1-phase models:

      - CSA models: wires are black (BLK) and white (WHT).
      - CE/CCC models: wires are brown (BRN) and blue (BLU).

b. Connect 3 wires for the 3-phase models:

- CSA models: wires are white (WHT), red (RED), and black (BLK).
- CE/CCC models: wires are blue (BLU), brown (BRN), and gray (GRY).

4. Connect the machine interface port using 2 screws if installed.

   Tighten to 1.1 N·m (10 lbf·in).

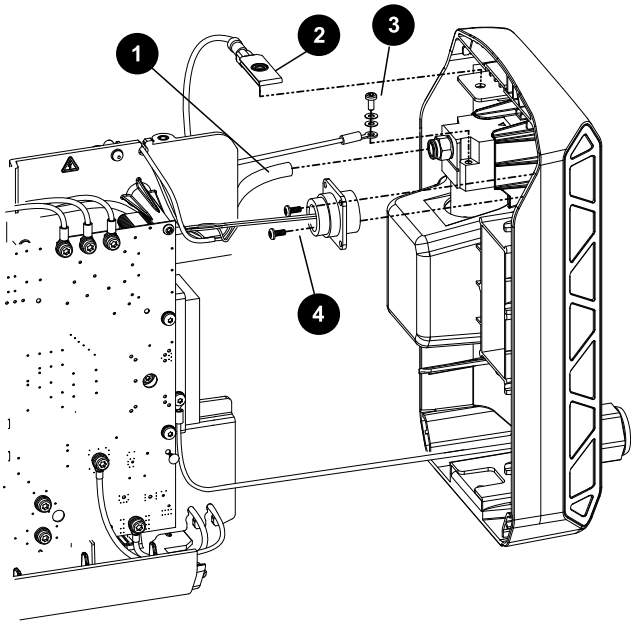

1 Gas supply hose

2 Ground clip

3 Ground wire

4 Machine interface port screws

5. Plug the serial interface cable into the RS-485 PCB if installed.
6. Connect the ground wire to the air filter assembly.

   Tighten to 2.3 N·m (20 lbf·in).

7. Snap the rear panel assembly back into place.

   Make sure no wires are pinched as you put the panel back in place.

8. Push-to-connect the looped gas supply hose to the air filter assembly.

   Insert the hose far enough so the marked line reaches the connector. The bottom of the loop should rest on the plastic shelf to the left of the fan.

9. Make sure the looped gas supply hose is not kinked.

If the gas supply hose is kinked, discard it and replace it with a new hose. The integrity of the hose is compromised once the hose is kinked.

10. Place the ground clip back onto the plastic tab on the rear panel.
11. Complete the following procedures:
    a. Install the plasma power supply cover and handle on page 134.
    b. Reconnect the gas supply and the power cord.

Replace the work lead receptacle

Remove the work lead receptacle

Figure 5 - Components of the work lead receptacle

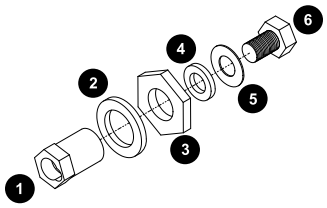

1	Work lead receptacle	4	Washer	**3**	Nut	6	Screw
2	Internal tooth lock washer	5	Washer				

1. Complete the following procedures:
    a. Set the power switch to OFF (**O**), disconnect the power cord from the power source, and disconnect the gas supply.
    b. Remove the plasma power supply cover and handle on page 133.
    c. Remove the component barrier on page 136.
    d. Loosen the front panel on page 139.
2. Remove the nut that secures the work lead receptacle to the front panel.
3. Separate the work lead receptacle from the front panel.

Figure 6 - Work lead receptacle components in the front panel

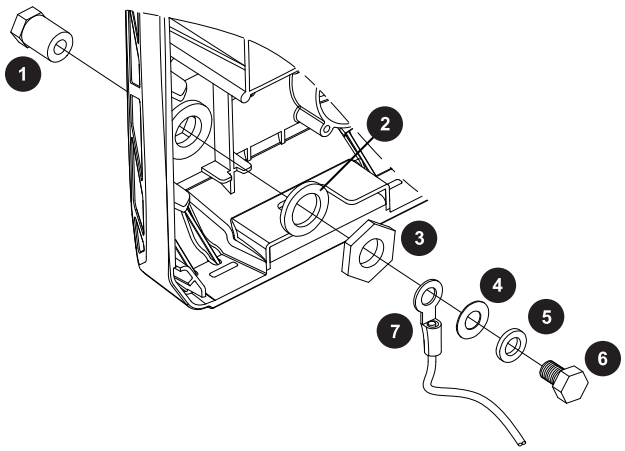

1 Work lead receptacle

2 Internal tooth lock washer

3 Nut

4 Washer

5 Washer

6 Screw

7 Work lead wire from power PCB

Install the work lead receptacle

1. Set the new work lead receptacle into place in the front panel.

   Position the receptacle so the notch faces to the right (when you face the front of the power supply). Refer to Figure 6 on page 150.

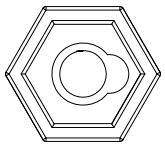

2. Install the nut and washer onto the back of the work lead receptacle.

   Use a 1/2 inch wrench. Tighten to 10.2 N·m (90 lbf·in).

3. Complete the following procedures:

   a. Attach the front panel on page 141.

   b. Install the component barrier on page 137.

   c. Install the plasma power supply cover and handle on page 134.

   d. Reconnect the power cord.

   e. Reconnect the gas supply.

Replace the torch quick-disconnect receptacle

Remove the torch quick-disconnect receptacle

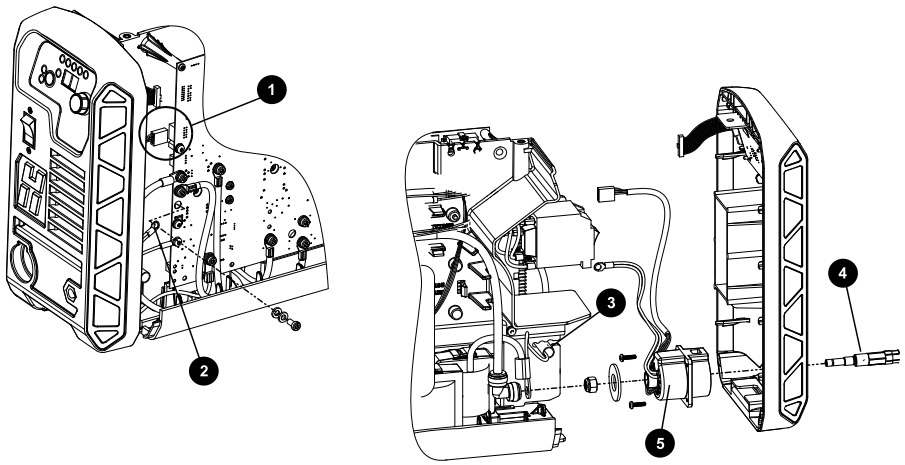

1 Power board J19 connection

2 Red wire pair (J15 connection)

3 Center panel slot

4 Brass torch fitting

5 Torch quick-disconnect receptacle

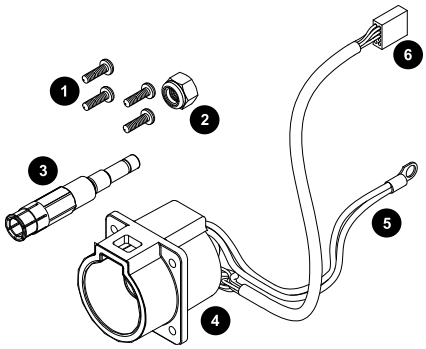

1 Screws

2 Nylon lock nut

3 Brass torch fitting

4 Torch quick-disconnect receptacle

5 Red wire pair (J15 connection)

6 Power PCB J19 connection

1. Complete the following procedures:
    a. Set the power switch to OFF (**O**), disconnect the power cord from the power source, and disconnect the gas supply.
    b. Remove the plasma power supply cover and handle on page 133.
    c. Remove the component barrier on page 136.

d. Loosen the front panel on page 139.

2. Unplug the connector from J19 on the power board PCB.
3. Remove the screw from the RED connection point (J15) on the power PCB.

   This is the red wire pair from the torch quick-disconnect receptacle.
4. Pull the red wire pair through the braided fiberglass sleeve and the pass-through slot in the center panel.
5. Push the brass torch fitting out through the torch quick-disconnect receptacle.
6. Separate the torch quick-disconnect receptacle from the front panel.

Install the torch quick-disconnect receptacle

1. Slide the red wire pair from the new quick-disconnect receptacle through the braided fiberglass sleeve.

   

   It may be easier to remove the sleeve from the center panel pass-through slot when sliding the red wires through it.
2. Make sure the braided fiberglass sleeve is set in the center panel pass-through slot.
3. Connect the red wire pair to the RED (J15) connection point on the power PCB.

   Tighten to 2.3 N·m (20 lbf·in).
4. Connect the cable to J19 on the power PCB.

   Route the cable through the same center panel pass-through as the braided fiberglass sleeve.
5. As you install the new receptacle:

   - Position the receptacle so the red wires are at the top.
   - Place the transformer wire ring terminal between the large plastic washer and the nut.
   - Check all wires to make sure no wires are pinched or frayed.
6. Complete the following procedures using the new parts:

   a. Attach the front panel on page 141.

   b. Install the component barrier on page 137.

   c. Install the plasma power supply cover and handle on page 134.

   d. Reconnect the gas supply and the power cord.

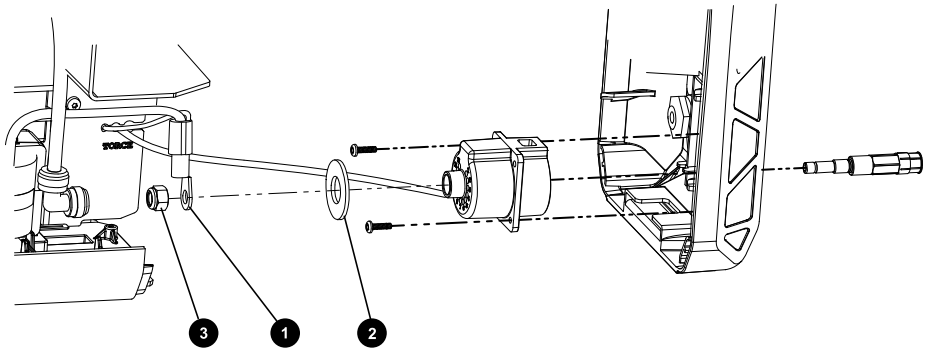

1 Transformer ring terminal

2 Large plastic washer

3 Nut

Replace the power switch (1-phase models)

Remove the power switch (1-phase)

1. Complete the following procedures:
    a. Set the power switch to OFF (**O**), disconnect the power cord from the power source, and disconnect the gas supply.
    b. Remove the plasma power supply cover and handle on page 133.
    c. Loosen the front panel on page 139.
2. Remove the 2 screws that attach the switch to the front panel.
3. Remove the 2 quick-connect terminals from the back of the power switch.
4. Remove the black (BLK) and white (WHT) AC input wires from the screw terminals near the top of the switch.
5. Remove the blue (BLU) and brown (BRN) power wires from the screw terminals near the base of the switch.

Figure 7 - 1-phase power switch wiring

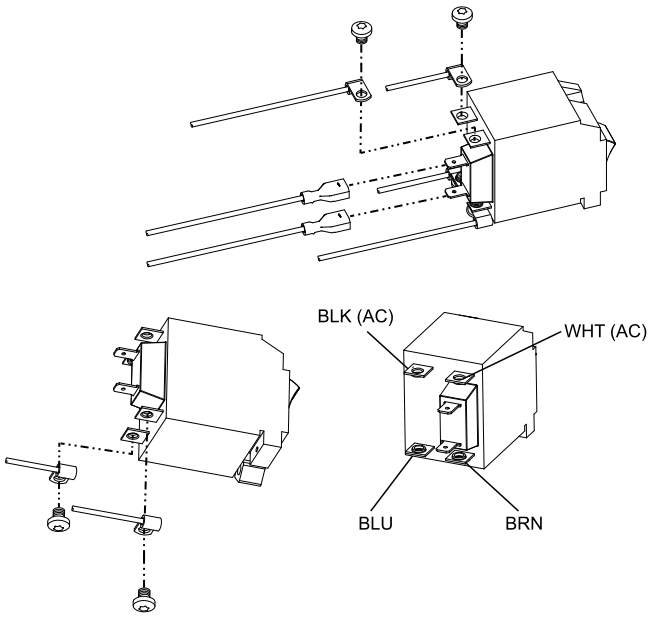

Install the power switch (1-phase)

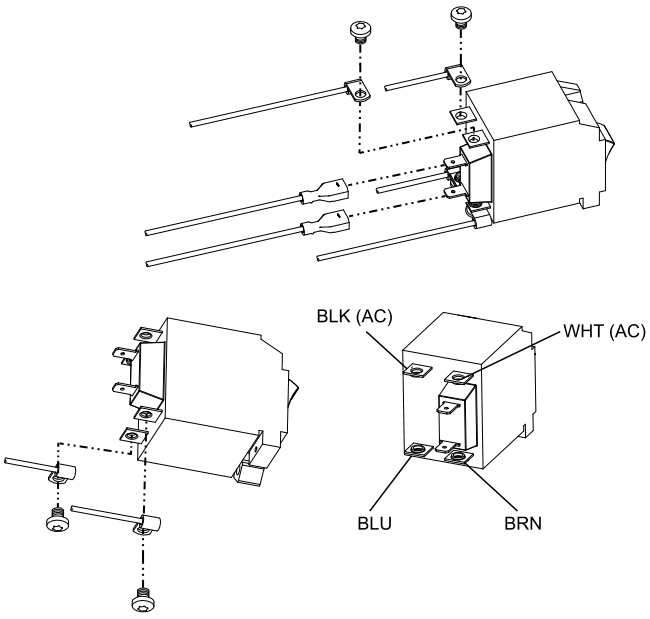

1. Connect the blue (BLU) and brown (BRN) wires from the power cord (CSA models) or EMI PCB (CE/CCC models) to the bottom screw terminal posts on the new power switch assembly.

   Tighten to 2.3 N·m (20 lbf·in).

2. Connect the black (BLK) and white (WHT) AC input wires from the main power PCB to the appropriate screw terminal post on the power switch assembly.

   Tighten to 2.3 N·m (20 lbf·in).

3. Plug the 2 quick-connect terminals onto the tabs on the power switch assembly.
4. Position the switch assembly against the front panel so that the **I** is at the top and the **O** is at the bottom.

   Secure with 2 screws. Tighten to 1.1 N·m (10 lbf·in).

5. Set the power switch to the OFF (**O**) position.
6. Complete the following procedures:
   a. Attach the front panel on page 141.
   b. Install the plasma power supply cover and handle on page 134.
   c. Reconnect the gas supply.
   d. Reconnect the power cord.

Replace the power switch (3-phase models)

Remove the power switch (3-phase)

1. Complete the following procedures:
   a. Set the power switch to OFF (**O**), disconnect the power cord from the power source, and disconnect the gas supply.
   b. Remove the plasma power supply cover and handle on page 133.
   c. Loosen the front panel on page 139.
2. Remove the nut that secures the front panel power switch knob to the front panel.
3. Push the knob out from the rear of the panel.
4. Loosen the screws on the power switch assembly to remove the 6 wires.

Install the power switch (3-phase)

1. Align the tab on the knob with the notch on the front panel.

   Secure the knob to the front panel using the plastic nut. Tighten to 2.3 N·m (20 lbf·in).

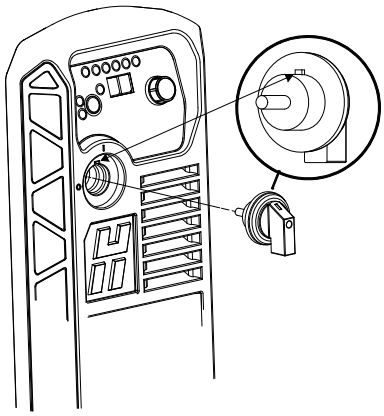

2. Connect the wires to the power switch assembly.

   Tighten to 2.3 N·m (20 lbf·in).

Figure 8 - 3-phase power switch wiring

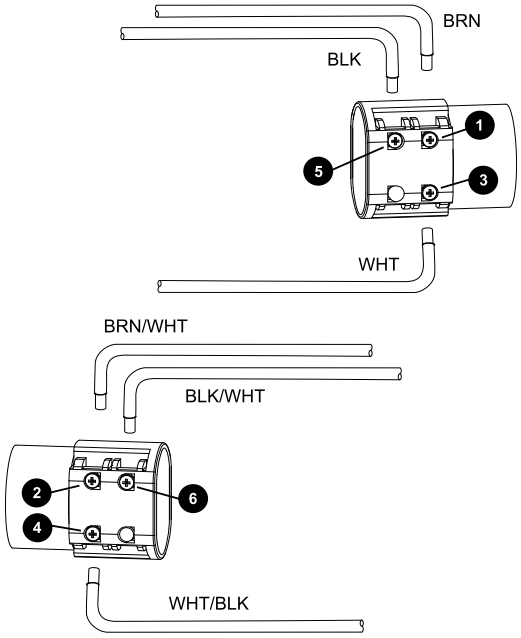

1 Brown (BRN) to contact 1.

2 Brown wire with white stripe (BRN/WHT) to contact 2.

3 Solid white wire (WHT) to contact 3.

4 White wire with black stripe (WHT/BLK) to contact 4.

5 Black (BLK) to contact 5.

6 Black wire with white stripe (BLK/WHT) to contact 6.

3. Set the power switch to the OFF (**O**) position.

4. Complete the following procedures:
    a. Attach the front panel on page 141.
    b. Install the plasma power supply cover and handle on page 134.
    c. Reconnect the gas supply.
    d. Reconnect the power cord.

Chapter 6: Service procedures for the gas supply

Replace the air filter bowl and filter element

It is extremely important to keep a clean gas line in the plasma power supply.

1. Set the power switch to OFF (**O**), disconnect the power cord from the power source, and disconnect the gas supply.
2. Remove the air filter bowl by unscrewing the metal guard until it disconnects from the air filter assembly inside the plasma power supply.

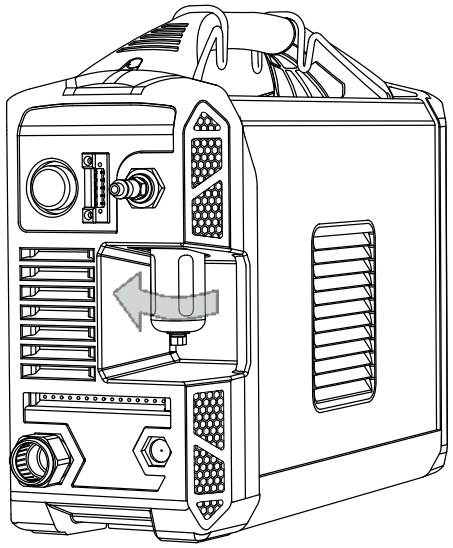

3. Remove the air filter bowl from the metal guard.
4. Gently pry the filter element out of the filter bowl.

Be careful not to damage the O-ring at the top of the bowl.



5. Twist the plastic fittings until they come apart, approximately a 1/4 turn.

   Set the fittings aside.



6. Put the new air filter element in the plastic fittings.

   Twist the plastic fittings until they lock together, approximately a 1/4 turn.

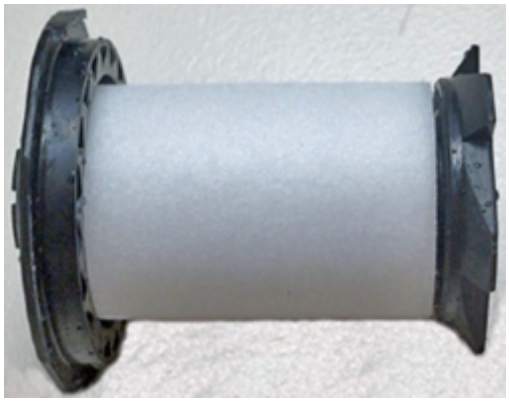

7. Clean the air filter bowl by wiping away any oil, dirt, or other contaminants.

   A yellow residue on the filter bowl can be a sign that oil is getting into the gas supply line.

8. Examine the O-ring, and replace it if it has cracks or other damage.
9. Put the O-ring at the top of the filter bowl.



10. Put the filter element inside the air filter bowl.

    Push down on the top plastic fitting until you hear a click.

11. Put the air filter bowl inside the metal guard.

12. Put the air filter bowl back into place by screwing the metal guard into the air filter assembly that is inside the plasma power supply.

    Keep the metal guard straight so that you do not damage the threads as you install it.

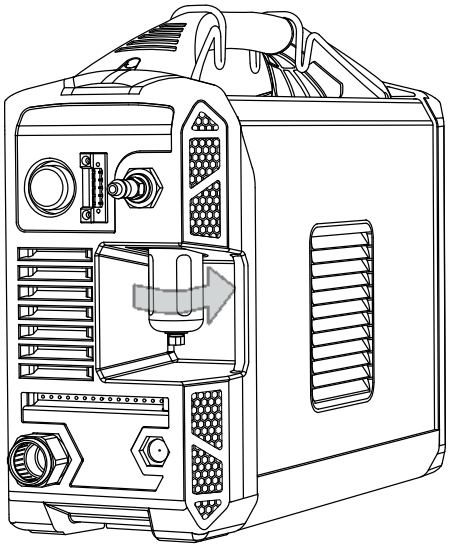

13. Reconnect the gas supply.

14. Reconnect the power cord.

15. Set the power switch to ON (**I**).

Replace the air filter assembly

Remove the air filter

1. Complete the following procedures:
    a. Set the power switch to OFF (**O**), disconnect the power cord from the power source, and disconnect the gas supply.
    b. Remove the plasma power supply cover and handle on page 133.
2. Remove the air filter bowl.

    See Replace the air filter bowl and filter element on page 158.
3. Push-to-disconnect the gas hose from the side of the air filter.
4. From the outside of the rear panel, remove the nut from the brass bulkhead fitting.
5. Pull out the air filter assembly from inside the rear panel.
6. Disconnect the ground wire from the air filter.
7. Push-to-disconnect the brass bulkhead fitting from the side of the air filter.

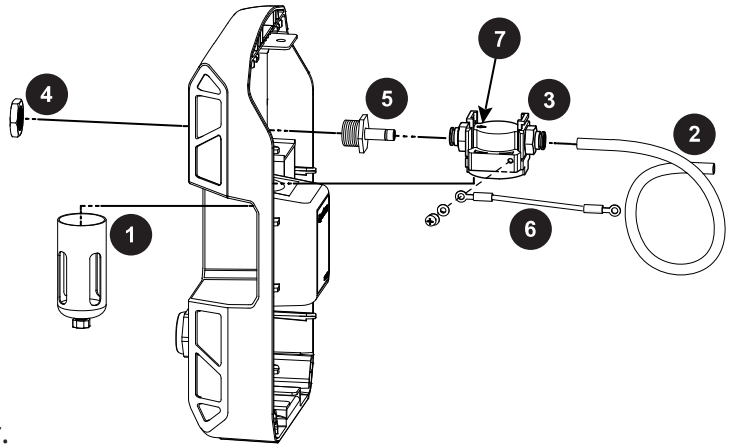

1 Air filter bowl and air filter
2 Gas hose
3 Air filter body
4 Gas connection nut
5 Brass bulkhead fitting
6 Ground wire
7 Brass bulkhead side of the air filter connection

Install the air filter

1. Put the brass bulkhead fitting into place inside of the rear panel.

Make sure the fitting is pushed all the way in against the rear panel.

2. Attach the nut onto the brass bulkhead fitting from the outside of the rear panel.

   Tighten to 13.5 N·m (120 lbf·in).

3. Connect the ground wire to the hole on the side of the new air filter.

   Make sure the other end of the wire is connected to the ground stud on the center panel. Tighten to 1.5 N·m (13 lbf·in).

   Use replacement hardware supplied in kit.

4. Put into place the new air filter with filter bowl and metal guard attached.

   Connect the end with the embossed arrow to the brass bulkhead fitting. Push-to-connect the air filter to the brass bulkhead fitting.

5. Push-to-connect the looped gas supply hose into the side of the air filter.

   Make sure the hose retains a looped shape and is not kinked or cracked.

   If the gas supply hose is kinked, discard it and replace it with a new hose. The integrity of the hose is compromised once the hose kinks.

6. Complete the following procedures:

   a. Install the plasma power supply cover and handle on page 134.

   b. Reconnect the gas supply.

   c. Reconnect the power cord.

Replace the fan and fan shroud

Remove the fan and fan shroud

Follow these steps to remove the fan.

1. Complete the following procedures:

   a. Set the power switch to OFF (**O**), disconnect the power cord from the power source, and disconnect the gas supply.

   b. Remove the plasma power supply cover and handle on page 133.

2. Detach the fan wire connector from J7 on the power PCB.

Lift the top edge of the component barrier to see the connector.

3. Remove the fan wires from the pass-through at the top of the center panel and from the clip on the center panel.

   If you have the RS-485 serial port installed, you may need to disconnect the RS-485 PCB from J11 on the power PCB to untangle the wires from the PCB and the fan.

4. Carefully remove the plenum from the fan casing.

   Release the clips in the top 2 corners of the plenum before releasing the bottom 2 clips.

   If necessary, use needle-nose pliers to compress and release the top 2 corner clips before working the bottom 2 clips free from the fan casing.

NOTICE

DO NOT BREAK THE CLIPS

Be careful not to apply too much pressure to the clips as you disconnect the plenum from the fan.

5. Remove the fan by pushing back the 2 clips on the right side of the fan until the fan assembly is released.

   The fan does not use any mounting screws to attach to the center panel.

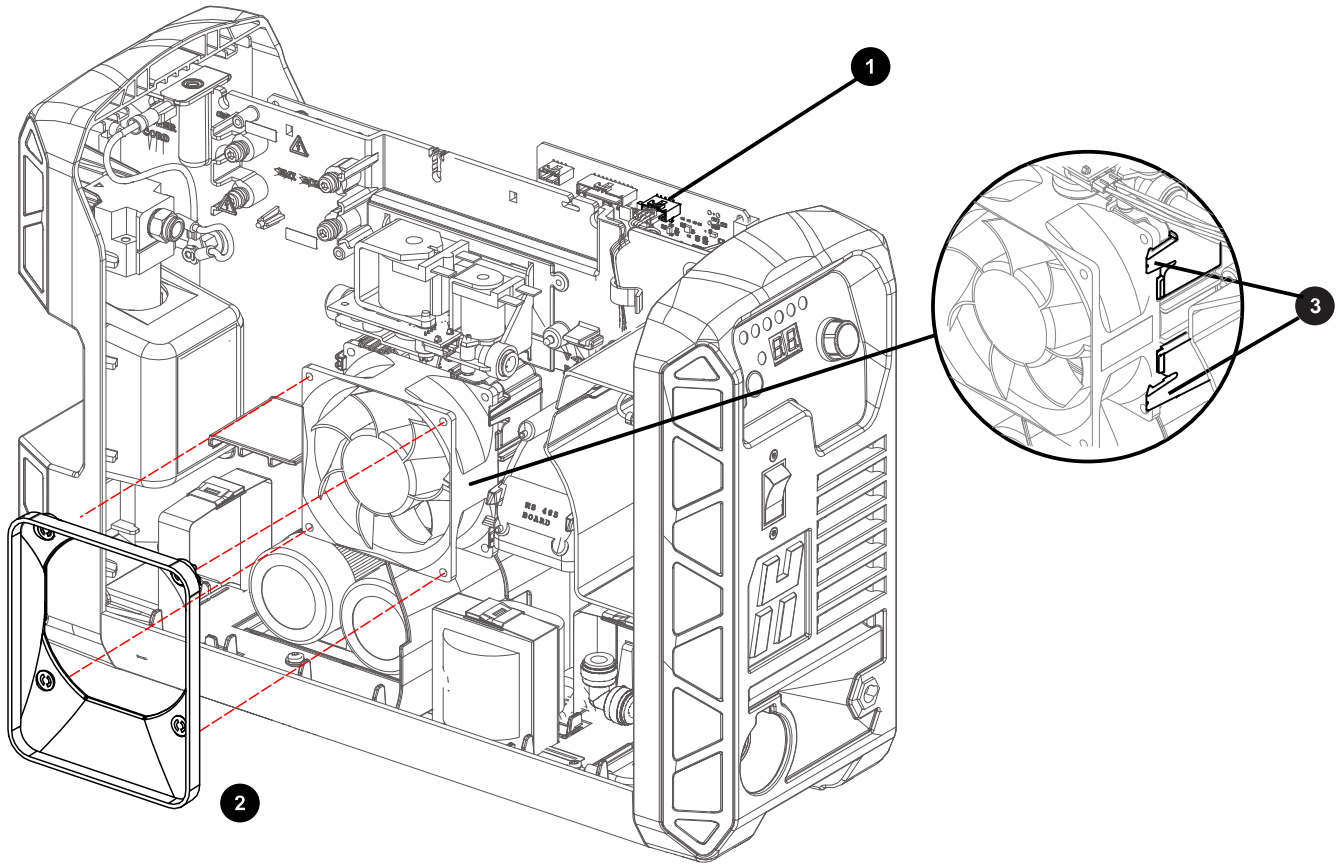

1 Fan wire connector

2 Fan plenum

3 Fan clips

Install the fan and fan shroud

NOTICE

CORRECT WIRE ROUTING IS NECESSARY

Do not put wires below the fan. If wires get pinched behind the fan, this can cause damage to the wires and prevent the fan from operating correctly.

Before you begin: To confirm you have the right fan, check the barcode sticker on the side of the fan. Fans for 3-phase models have a 6-digit Hypertherm part number (429225) on the sticker. Fans for 1-phase models have only the barcode on the sticker.

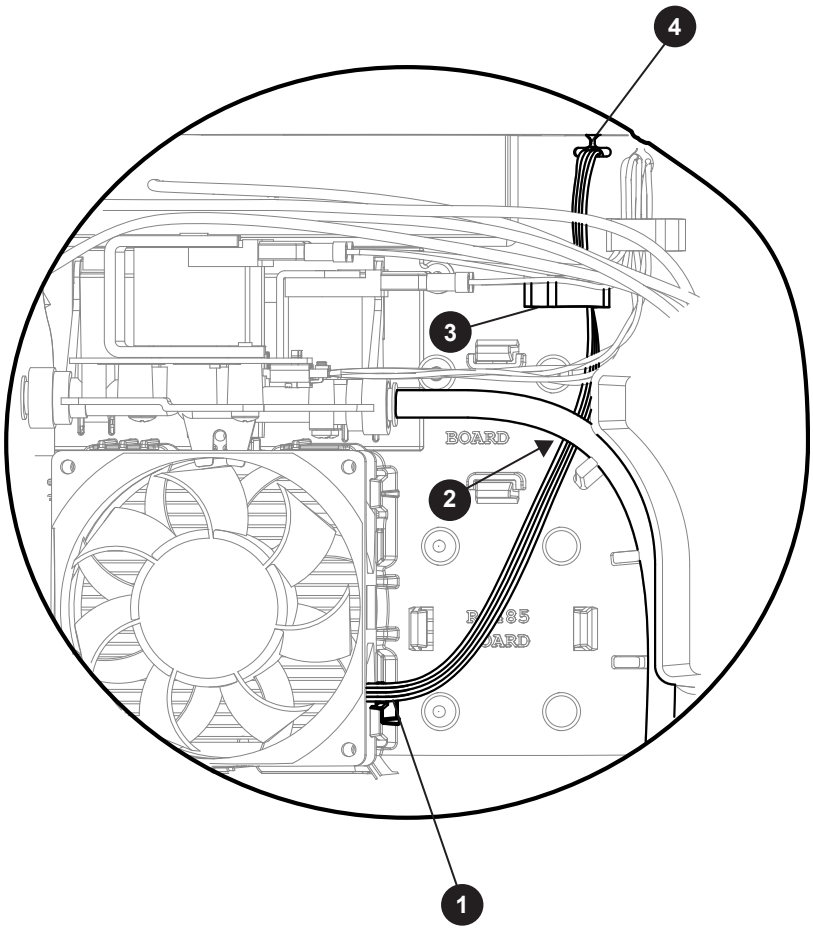

1	Wires on the bottom right corner	**3**	Center panel clip
2	Gas tube	**4**	Pass-through

1. Snap the new fan into place on the center panel.
    a. Position the fan so the wires extend from the bottom right corner as shown.
    b. Put the left side of the fan into place first, then push in the right side of the fan until it snaps into place.
    c. **Make sure no wires are pinched behind the fan**, and check each side and corner around the fan.
2. Route the wires for the fan as follows.
    - ☐ Behind the gas tube and the wires from the solenoid valve.
    - ☐ Through the clip on the center panel.
    - ☐ Through the pass-through labeled "FAN" at the top of the center panel.
3. Plug the wire connector into J7 on the power PCB.

4. Align the 4 clips on the new fan plenum to the slot locations on the fan and press it into place.
5. Complete the following procedures:
    a. Install the plasma power supply cover and handle on page 134.
    b. Reconnect the gas supply.
    c. Reconnect the power cord.

Replace the solenoid valve

Remove the solenoid valve

1. Complete the following procedures:
    a. Set the power switch to OFF (**O**), disconnect the power cord from the power source, and disconnect the gas supply.
    b. Remove the plasma power supply cover and handle on page 133.
    c. Remove the fan and fan shroud on page 162.
2. Push-to-disconnect the 2 gas supply hoses from the solenoid valve assembly.

    Disconnect the gas supply hoses from the air filter assembly and 90° fitting if you are also replacing the hoses.

3. Unplug the solenoid valve connector from J8 on the power PCB.

    Work the wires free from the center panel pass-through and from the plastic clip.

4. Press up from underneath the solenoid valve assembly to release it from the center panel.

    Press on the plastic housing to remove the valve. **Do not press on the valve assembly PCB.**

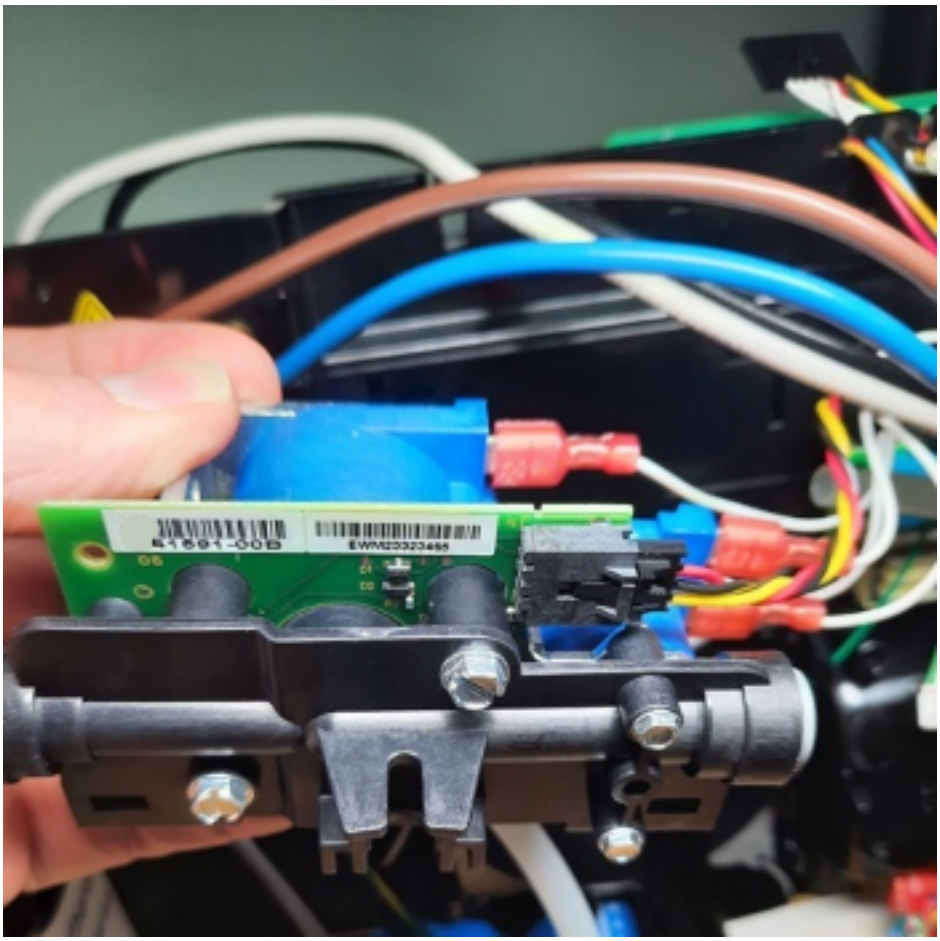

Install the solenoid valve

1. Align the top corner tabs of the solenoid valve assembly to the slots in the center panel.

   Hold the valve at approximately a 45° angle.

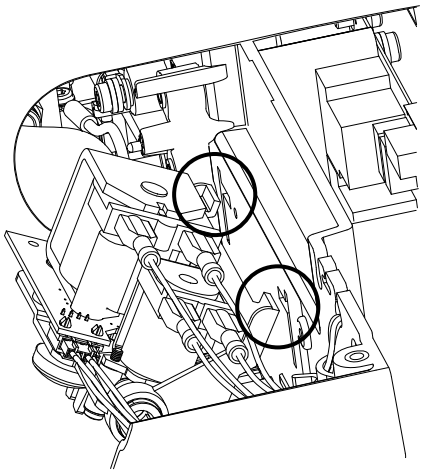

2. Push the top corner tabs into the center panel slots, then rotate the bottom of the valve assembly down until it snaps into place.
3. Route the wires behind the plastic clip and through the center panel pass-through.
4. Plug the solenoid valve connector into J8 on the power PCB.

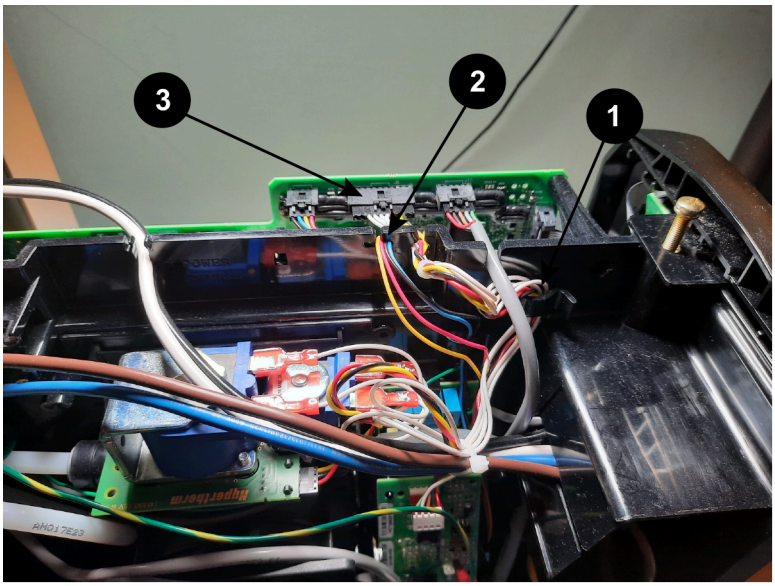

1 Plastic clip

2 Wire pass-through

3 J8 solenoid valve connector

5. Make sure the wire connections on the valve are secure.

   The wire length should allow easy routing to the power PCB and should not be taut.

6. Push-to-connect the 2 gas supply hoses to the solenoid valve assembly.

   Insert each gas supply hose so the marked line reaches the connector. See Install the gas supply hoses and 90 degree fitting on page 170.

   If you are replacing the hoses, connect the new hoses to the air filter assembly and to the 90° fitting. Make sure the gas supply hose from the air filter assembly has a looped shape and is not kinked or cracked. See Remove the gas supply hoses and 90 degree fitting on page 169.

   > If a gas supply hose is kinked, discard it and replace it with a new hose. The integrity of the hose is compromised once the hose is kinked.

7. Complete the following procedures:

   a. Install the fan and fan shroud on page 164.

b. Install the plasma power supply cover and handle on page 134.

c. Reconnect the gas supply.

d. Reconnect the power cord.

Replace the gas supply hoses and 90 degree fitting

Remove the gas supply hoses and 90 degree fitting

1. Complete the following procedures:

   a. Set the power switch to OFF (**O**), disconnect the power cord from the power source, and disconnect the gas supply.

   b. Remove the plasma power supply cover and handle on page 133.

2. Push-to-disconnect the looped gas supply hose from the air filter assembly and from the solenoid valve assembly.
3. Push-to-disconnect the gas supply hose from the solenoid valve assembly and from the 90° fitting.
4. Push-to-disconnect the 90° fitting from the brass torch fitting.

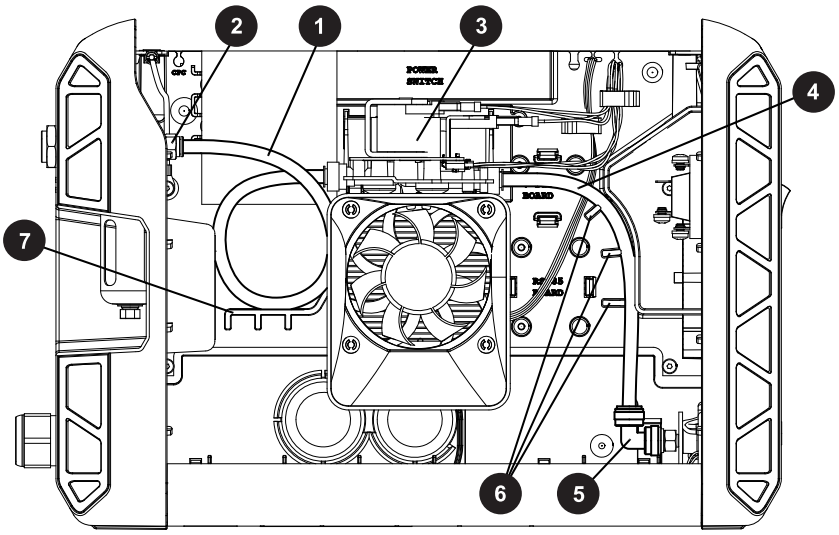

1 Gas supply from the air filter assembly

2 Air filter assembly

3 Solenoid valve assembly

4 Gas supply hose from the solenoid valve assembly

5 90° fitting

6 Plastic chassis divider guides

7 Plastic shelf for looped hose

Install the gas supply hoses and 90 degree fitting

1. Push-to-connect the smaller diameter end of the 90° fitting onto the front panel brass torch fitting.
2. Push-to-connect one end of the of the shorter gas supply hose into the 90° fitting.

   Insert the hose far enough so the marked line reaches the connector, as shown.





3. Push-to-connect the other end of the shorter gas supply hose to the solenoid valve assembly.

   Insert the hose far enough so the marked line reaches the connector.

4. Press the gas supply hose into the plastic chassis divider guides.

5. Push-to-connect one end of the longer or looped gas supply hose to the solenoid valve assembly.

   Insert the hose far enough so the marked line reaches the connector.

6. Loop the gas supply hose around (if needed) and push-to-connect the other end to the air filter assembly.

   Insert the hose far enough so the marked line reaches the connector. The bottom of the loop should rest on the plastic shelf to the left of the fan.

7. Make sure the looped gas supply hose is not kinked.

   If the gas supply hose is kinked, discard it and replace it with a new hose. The integrity of the hose is compromised once the hose is kinked.

8. Complete the following procedures:

   a. Install the plasma power supply cover and handle on page 134.

   b. Reconnect the gas supply.

   c. Reconnect the power cord.

Replace the gas inlet fittings

Remove the gas inlet fittings

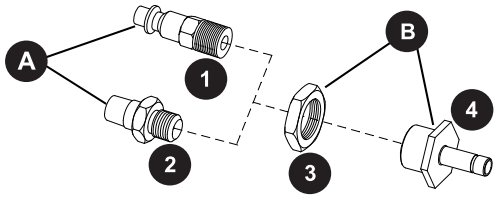

A	Kit: 428685 Air intake fittings	**B**	Kit: 428732 Bulkhead fittings
1	Quick-disconnect nipple 1/4 NPT	**3**	Hex nut
2	G-1/4 BSPP adapter with 1/4 NPT threads	**4**	1/4 NPT x 8 mm brass bulkhead fitting

For these steps, refer to Figure 9 on page 172.

1. Complete the following procedures:
    a. Set the power switch to OFF (**O**), disconnect the power cord from the power source, and disconnect the gas supply.
    b. Remove the plasma power supply cover and handle on page 133.
2. Remove the gas inlet fitting from the back of the plasma power supply.
3. From the outside of the rear panel, remove the nut from the brass bulkhead fitting.
4. Push-to-disconnect the brass bulkhead fitting from the side of the air filter.
5. Discard the fittings that need to be replaced.

Install the gas inlet fittings

Figure 9 - Rear panel with gas inlet fittings

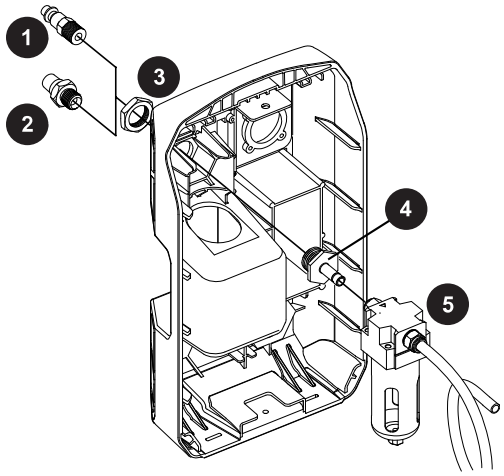

1 1/4 NPT quick-disconnect nipple
2 G-1/4 BSPP adapter
3 Nut
4 Brass bulkhead fitting
5 Air filter

Before you begin:

NOTICE

PTFE TAPE CAN CAUSE CLOGGED VALVES, REGULATORS, AND TORCHES

Never use PTFE tape on any joint preparation. Use only a liquid or paste thread sealant on male thread ends.

1. Put the brass bulkhead fitting into place inside of the rear panel.

   Make sure the fitting is pushed in against the rear panel.
2. Attach the nut onto the brass bulkhead fitting from the outside of the rear panel.
3. Tighten to 13.5 N·m (120 lbf·in).
4. Push-to-connect the air filter to the brass bulkhead fitting.
5. Apply thread sealant if needed.

Fitting	Thread sealant
G-1/4 BSPP adapter	Lightly apply thread sealant. Apply a bead of thread sealant on 2 – 3 threads. To avoid gas line contamination, do not apply too much sealant.
1/4 NPT quick-disconnect nipple	Thread sealant is pre-applied.

6. Attach the gas inlet fitting to the brass bulkhead fitting.

Fitting	Torque
G-1/4 BSPP adapter	Tighten to 10.2 N·m (90 lbf·in).
1/4 NPT quick-disconnect nipple	Tighten to 11.3 N·m (100 lbf·in).

7. Complete the following procedures:
   a. Install the plasma power supply cover and handle on page 134.
   b. Reconnect the gas supply.
   c. Reconnect the power cord.

Chapter 7: Service procedures for the PCBs and related components

Replace the display PCB and ribbon cable

Remove the display PCB and ribbon cable

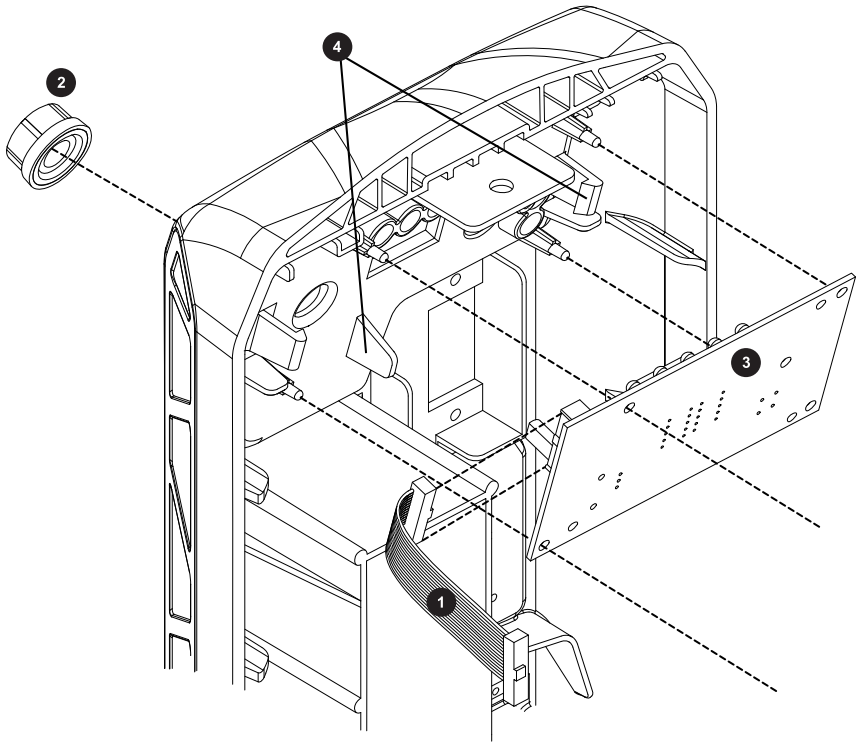

1	Ribbon cable	**3**	Kit: 528139 Display PCB
2	Control knob	**4**	PCB clips

1. Complete the following procedures:
    a. Set the power switch to OFF (**O**), disconnect the power cord from the power source, and disconnect the gas supply.
    b. Remove the plasma power supply cover and handle on page 133.
    c. Loosen the front panel on page 139.
2. Make sure the ribbon cable is disconnected from the power PCB.
3. Pull the adjustment knob off the front panel.
4. Disconnect the ribbon cable from the display PCB.
5. Pull back the plastic clips, and slide the display PCB out of the front panel until it is clear of the 4 mounting posts.

Install the display PCB and ribbon cable

1. Connect the ribbon cable to the display PCB.

2. Put the new display board into place in the front panel by pushing it onto the 4 mounting posts.

   Make sure the clips in the front panel snap into place over the PCB.

3. Push the adjustment knob onto the post on the front panel.
4. Make sure you plug the ribbon cable into the power PCB as you reattach the front panel.
5. Complete the following procedures:
   a. Attach the front panel on page 141.
   b. Install the plasma power supply cover and handle on page 134.
   c. Reconnect the gas supply.
   d. Reconnect the power cord.

Replace the power PCB

Remove the power PCB

Figure 10 - Screws to remove components from the plasma power PCB

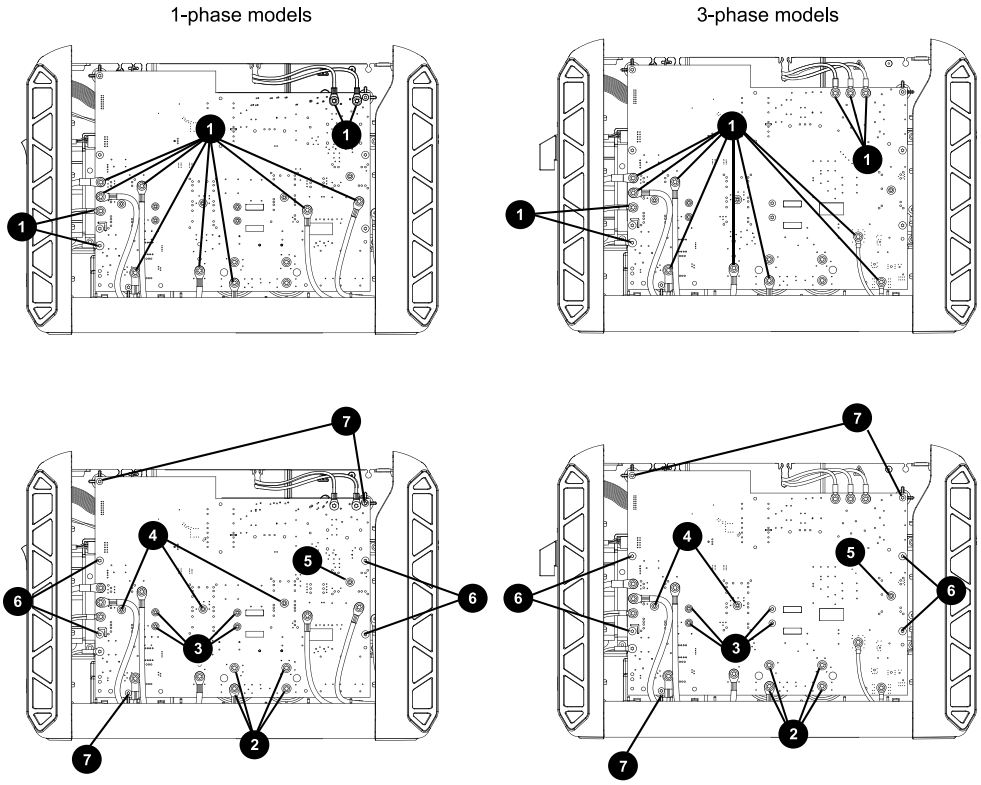

1	Screws that secure wires (12 for 1-phase; 13 for 3-phase)	**5**	Rectifier screw (1)
2	Capacitor screws (4)	**6**	Machine screws – standoff (4)
3	Snubber resistor screws (4)	**7**	Self-tapping screws – standoff (3)
4	Insulated-gate Bipolar Transistor (IGBT) screws (3 for 1-phase; 2 for 3-phase)		

Before you begin: When replacing the power PCB, also check the snubber resistors. Refer to Do an initial resistance check on page 25.

1. Complete the following procedures:
    a. Set the power switch to OFF (**O**), disconnect the power cord from the power source, and disconnect the gas supply.
    b. Remove the plasma power supply cover and handle on page 133.
    c. Remove the component barrier on page 136.
2. Get a photograph of the power PCB so that you have a record of how all the screws and wires are attached.

3. Remove the screw-secured wires from the power PCB.
    - 1-phase models have 12 wires.
    - 3-phase models have 13 wires.
4. Remove the 3 remaining capacitor screws.
5. Remove the 4 snubber resistor screws.
6. Remove the IGBT screws.
    - 1-phase models have 3 IGBT screws.
    - 3-phase models have 2 IGBT screws.
7. Remove the rectifier screw.
8. Remove the standoff screws.

    There are 3 self-tapping screws and 4 machine screws.
9. Unplug all the connectors from the power PCB.

    See Figure 16 on page 185.
10. Slowly pull the power PCB straight back and away from the unit.
    - 1-phase models: Unplug the J10 2-wire connector from the power PCB.
    - 3-phase models: There is no J10 connection.

Figure 11 - J10 connector on the 1-phase power PCB

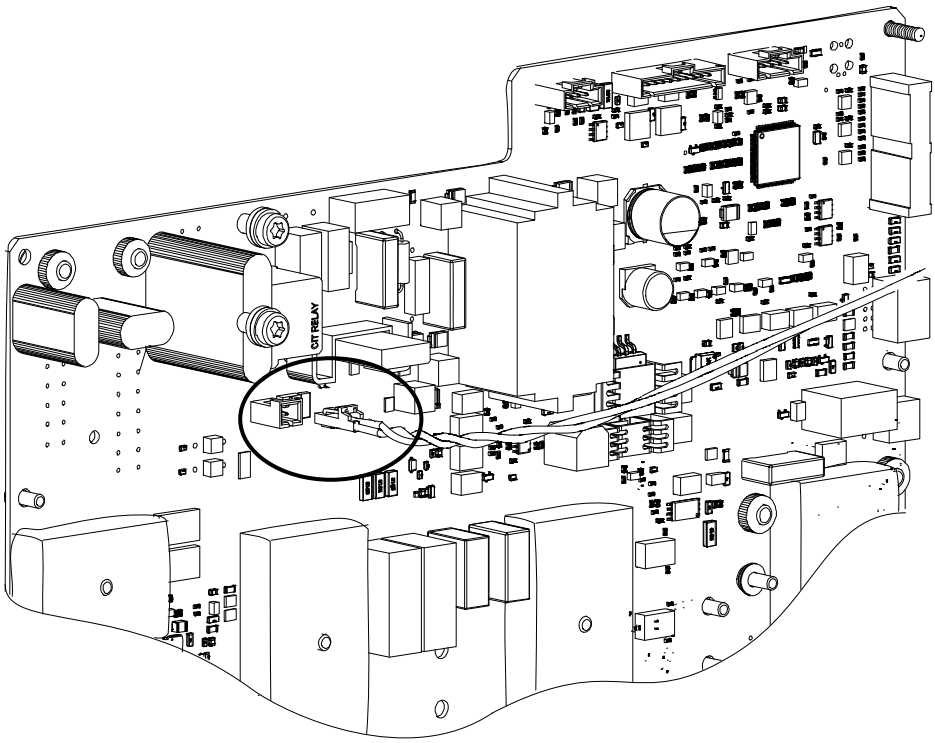

11. Remove the power PCB from the unit.

Install the power PCB

Refer to this image as you do the steps in this procedure.

Figure 12 - Component connections on the power PCB

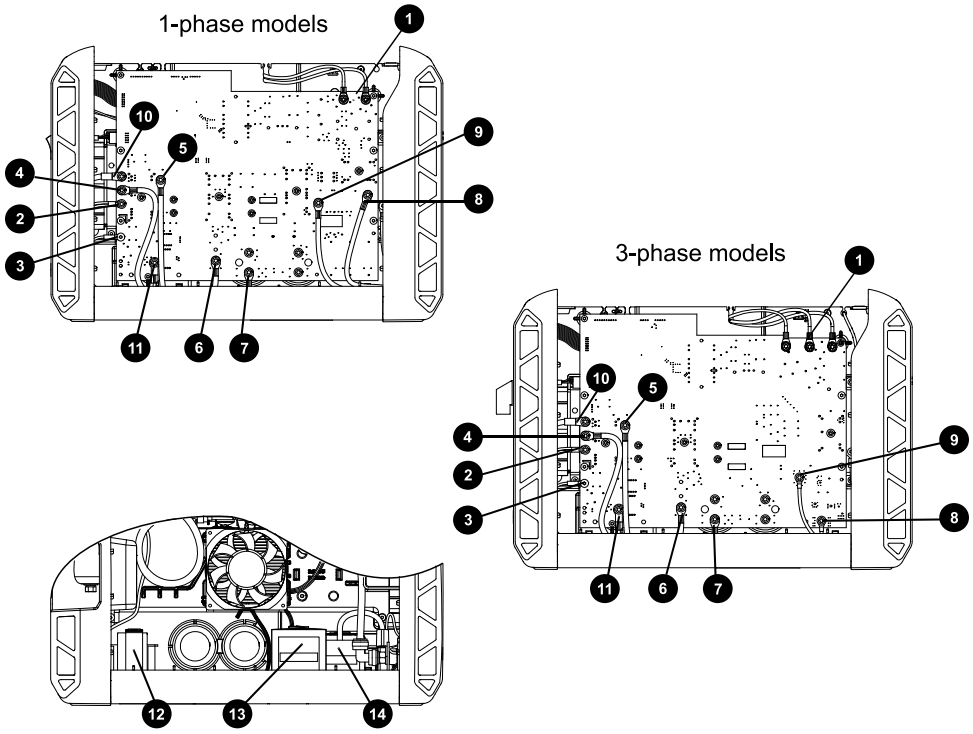

1	Power switch connections (J1 and J2 for 1-phase; J1, J2, and J4 for 3-phase)	**8**	Power transformer primary – red
2	Dual red nozzle wires from torch receptacle (J15)	**9**	PFC inductor – red (J5)
3	White electrode wire from torch socket (J18)	**10**	PFC inductor – black (J4 for 1-phase; J26 for 3-phase)
4	Power transformer secondary – black (J14)	**11**	Output inductor – yellow (J13)
5	Power transformer secondary – red (J12)	**12**	Work lead wire (J23)
6	Power transformer primary – black (J6)	**13**	PFC inductor
7	Power switch connections (J1 and J2 for 1-phase; J1, J2, and J4 for 3-phase)	**14**	Power transformer

Before you begin:

NOTICE

POSSIBLE DAMAGE TO EQUIPMENT

Do not apply too much thermal grease to the components on the power PCB. Too much grease can cause damage to the power PCB and to the plasma power supply.

Apply only a very thin layer of thermal grease as shown in this procedure. **Do not apply all of the 1/8 ounce of grease that is supplied in the kit.**

1. Make sure that you have the correct power PCB for your system.
    - ☐ The replacement kit number for a 200 V – 240 V CSA/CE/CCC system is 528140.
    - ☐ The replacement kit number for a 400 V CE/CCC system is 528141.
    - ☐ The replacement kit number for a 480 V CSA system is 528142.
2. Use isopropyl alcohol to remove the old thermal grease from the heatsink.
3. Evenly apply a 0.0762 mm (0.003 inch) layer of thermal grease, about the thickness of a sheet of paper, on the IGBTs and on the rectifier.

    There are 3 IGBT components and 1 rectifier component for 1-phase models. There are 2 IGBT components and 1 rectifier component for 3-phase models.

4. **1-phase models:** Plug the 2-wire connector from the power switch assembly into J10 on the power PCB.

    The J10 connection is for the trip coil on the power switch. There is no trip coil on 3-phase models.

Figure 13 - J10 connector on the 1-phase power PCB

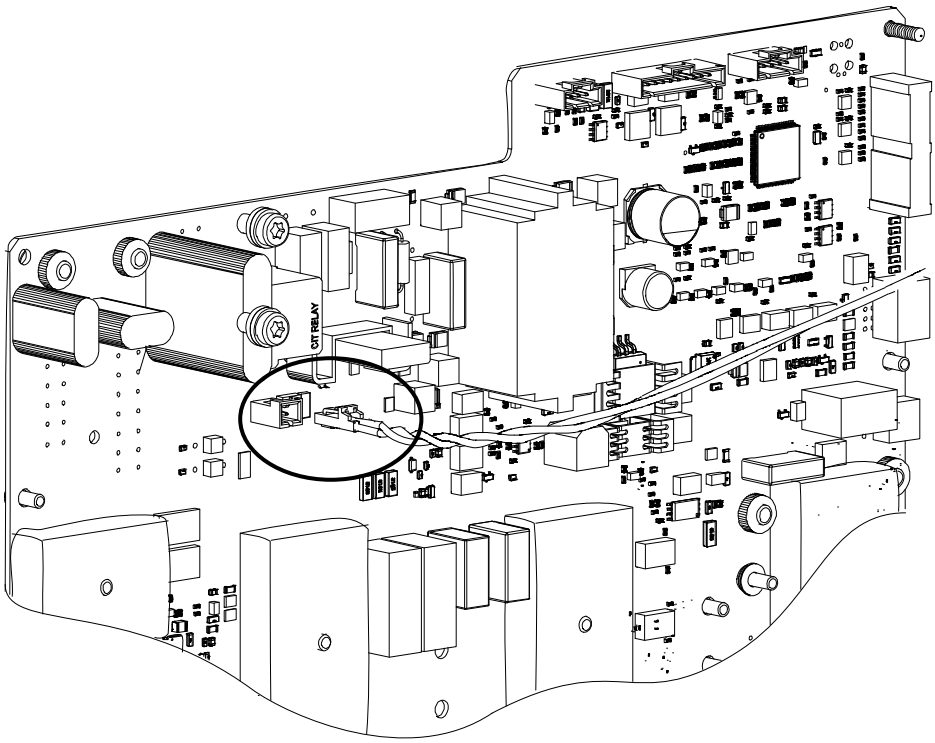

5. Move the wires away from where you will install the power PCB.
6. Put the power PCB into position inside the plasma power supply.

   Make sure that the white polarity dot on each capacitor aligns with the viewing hole on the power PCB.

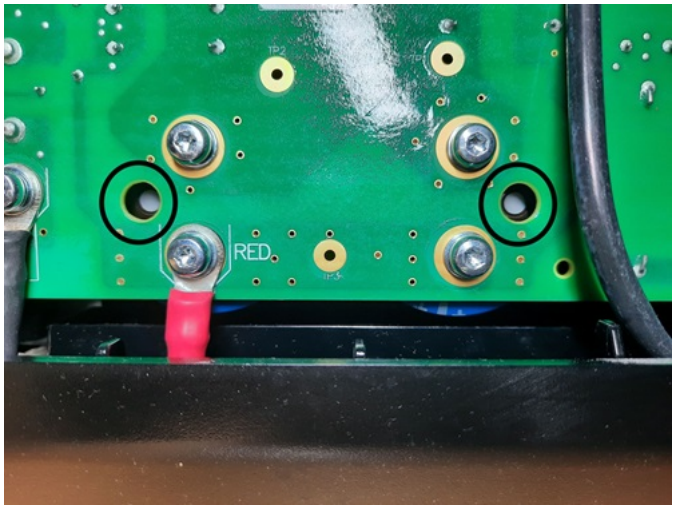

7. Reconnect the screws and wires.

Loosely tighten all the screws with your fingers before fully tightening any of them.

8. Slowly tighten to 2.3 N·m (20 lbf·in) the IGBT screws and the rectifier screw in the sequence shown here.

Figure 14 - 1-phase power PCB sequence for tightening the screws

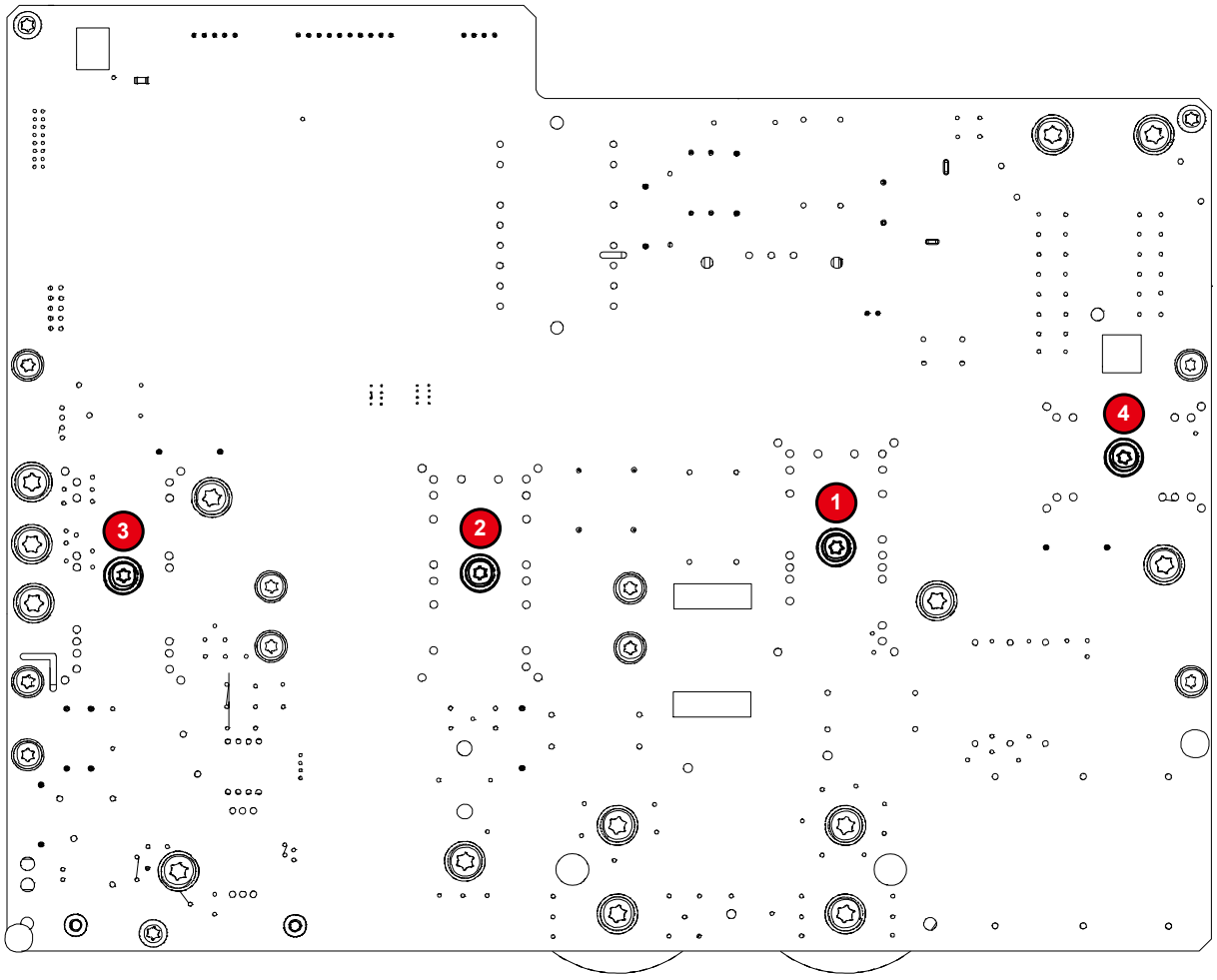

Figure 15 - 3-phase power PCB sequence for tightening the screws

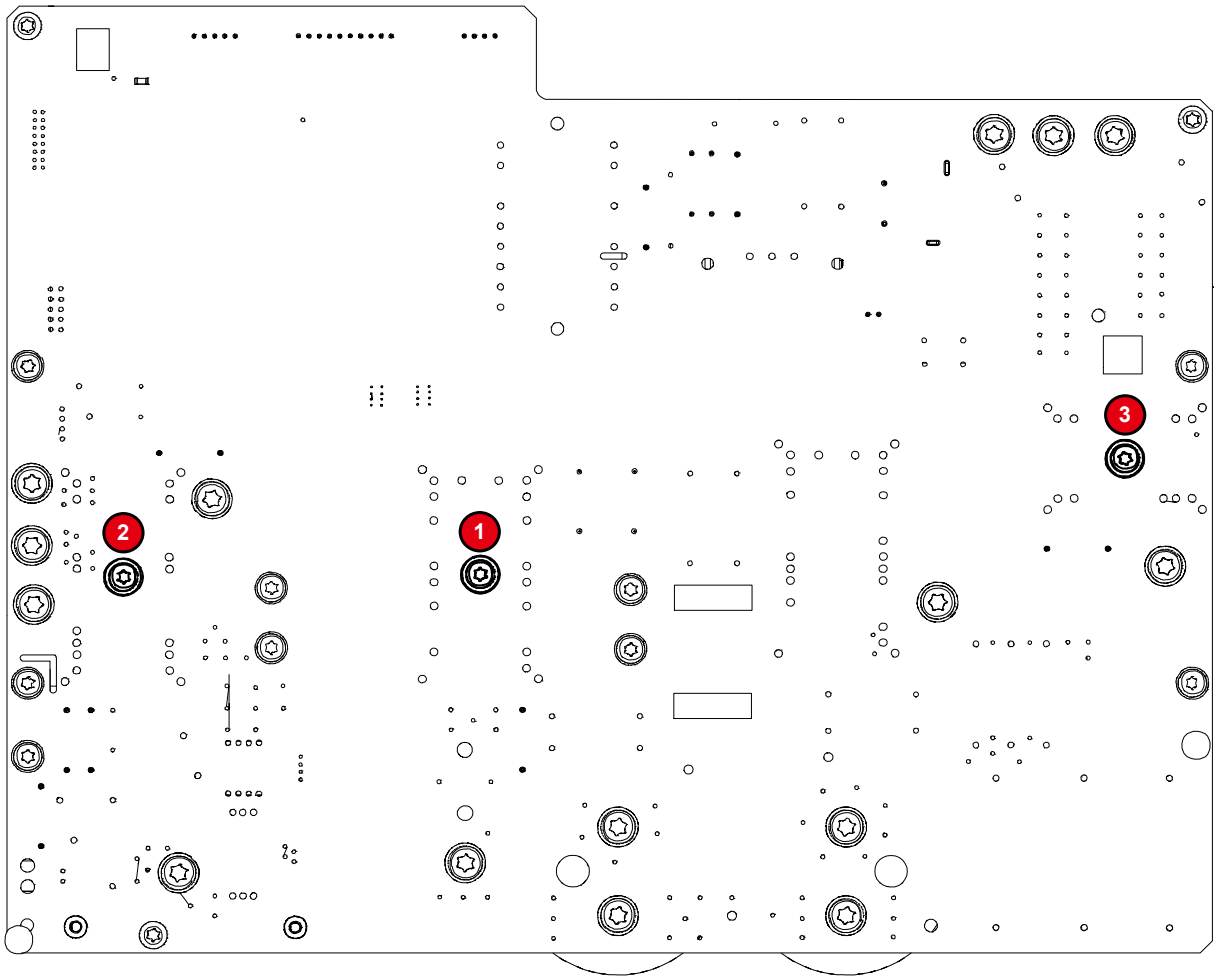

9. Tighten the 4 snubber resistor screws and the 4 machine screws to 1.7 N·m (15 lbf·in).

   Start with the top left and bottom right machine screws.

10. Tighten the 4 capacitor screws to 2.3 N·m (20 lbf·in).
11. Tighten the 3 self-tapping standoff screws.
12. Tighten the screw-secured wires to 2.3 N·m (20 lbf·in).
13. Make the following connections to the power PCB.

Component	Connector on power PCB	Connector type
Solenoid valve assembly	J8	8-pin
Fan	J7	4-pin
RS-485 serial interface	J11	5-pin

Component	Connector on power PCB	Connector type
Machine interface port	J21	4-pin
Voltage divider PCB	J17	2-pin
Torch receptacle	J19	10-pin
Display PCB	J3	Ribbon cable

Figure 16 - More component connections on the power PCB

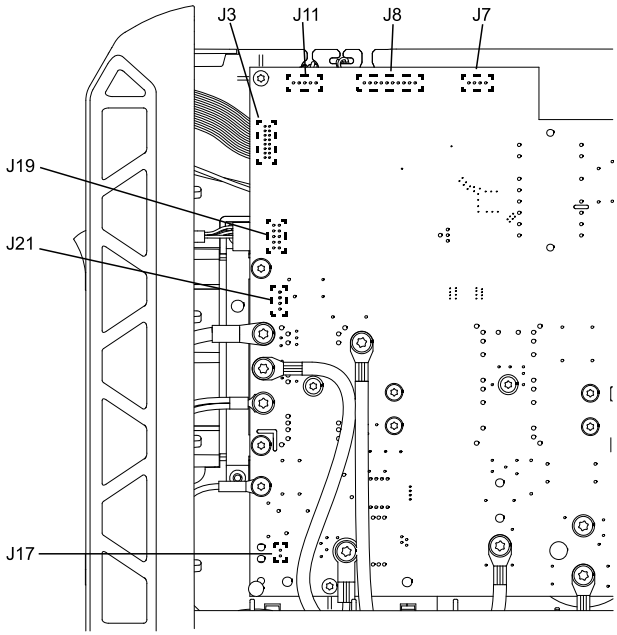

14. Complete the following procedures:

    a. Install the component barrier on page 137.

    b. Install the plasma power supply cover and handle on page 134.

    c. Reconnect the gas supply.

    d. Reconnect the power cord.

Replace the EMI PCB (CE/CCC 1-phase models only)

Remove the EMI PCB

Before you begin:

⚠ WARNING



ELECTRIC SHOCK CAN KILL

Let the system release internal voltages before you touch components on the EMI PCB (CE/CCC 1-phase models only). There can be live voltages on the EMI PCB after the system is set to OFF.

1. Complete the following procedures:
    a. Set the power switch to OFF (**O**), disconnect the power cord from the power source, and disconnect the gas supply.
    b. Remove the plasma power supply cover and handle on page 133.
    c. Remove the component barrier on page 136.
2. Pull back the 4 insulating covers to show the power wire screws.

    Slide the covers down the wires out of the way.
3. Remove the screws securing the 4 power wire ring terminals.
4. Remove the 2 screws that secure the EMI PCB to the center panel.

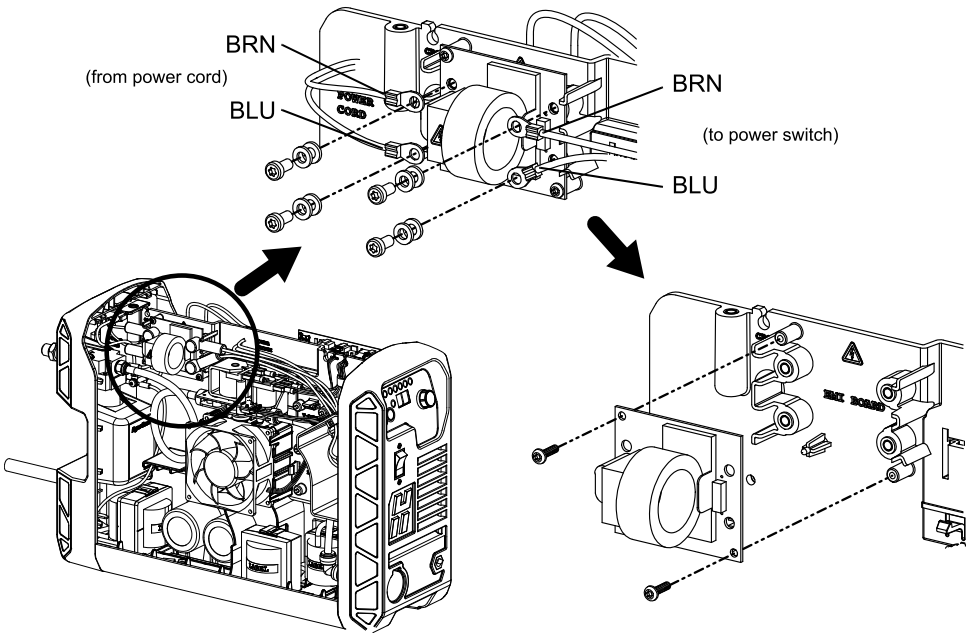

Install the EMI PCB

1. Place the new EMI PCB into position at the location marked "EMI BOARD" on the center panel.

   Make sure the screw holes align and the placement pin aligns with the PCB.

2. Secure the PCB to the center panel with 2 screws.

   Tighten the screws to 1.7 N·m (15 lbf·in).

3. Connect the 4 power wires.

   Tighten the screws to 2.3 N·m (20 lbf·in).

   a. Brown wire (BRN) from the power switch to the top right terminal.

   b. Blue wire (BLU) from the power switch to the bottom right terminal.

   c. Brown wire (BRN) from the power cord to the top left terminal.

   d. Blue wire (BLU) from the power cord to the bottom left terminal.

4. Slide the 4 insulating covers back into place over the power wire screws.

5. Complete the following procedures:

   a. Install the component barrier on page 137.

   b. Install the plasma power supply cover and handle on page 134.

   c. Reconnect the gas supply.

   d. Reconnect the power cord.

Replace the bulk capacitors

Remove the bulk capacitors

Before you begin:

⚠ WARNING



ELECTRIC SHOCK CAN KILL

Let the system release internal voltages before you touch the capacitors. The capacitors can hold a charge for several minutes after the system is set to OFF.

1. Complete the following procedures:
   a. Set the power switch to OFF (**O**), disconnect the power cord from the power source, and disconnect the gas supply.
   b. Remove the plasma power supply cover and handle on page 133.
   c. Remove the component barrier on page 136.
2. Carefully remove the plenum from the fan casing.

   Release the clips in the top 2 corners of the plenum before releasing the bottom 2 clips. See the figure found in this section.

   If necessary, use needle-nose pliers to compress and release the top 2 corner clips before working the bottom 2 clips free from the fan casing.

NOTICE

DO NOT BREAK THE CLIPS

Be careful not to apply too much pressure to the clips as you disconnect the plenum from the fan.

3. Remove the 4 capacitor mounting screws from the power board PCB.
4. From the opposite side of the power supply (fan side), remove the capacitors by pulling them straight out.

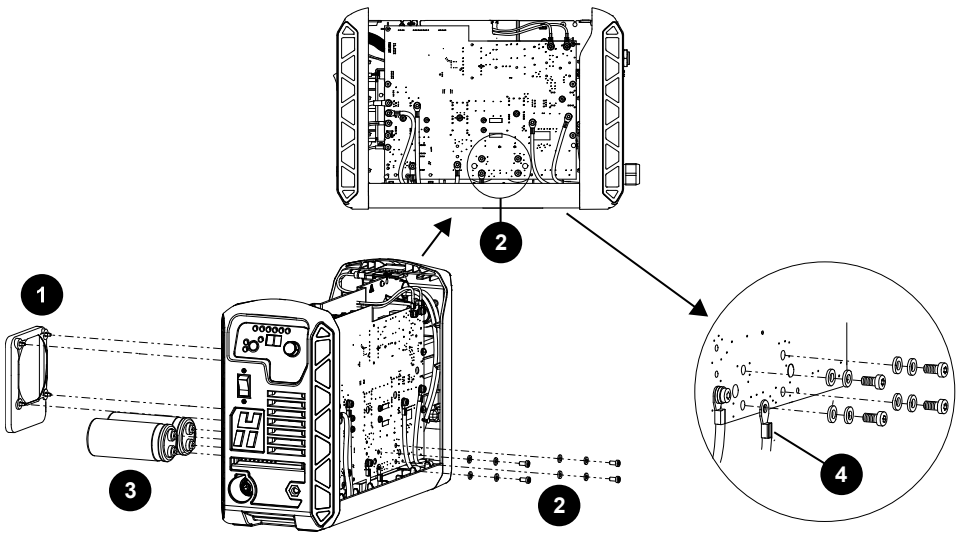

1 Fan plenum

2 Screw locations

3 Bulk capacitors

4 Grounding wire

Install the bulk capacitors

1. Insert the new capacitors from the fan side of the plasma power supply.

   See the figure found in this section.

2. Rotate each capacitor until the polarity dot aligns with the viewing hole on the power PCB.

   See the figure found in this section.

3. Attach the capacitors to the power PCB with the 4 mounting screws.

   Secure the transformer wire to the RED location. Start the 4 screws by hand then tighten to 2.3 N·m (20 lbf·in).

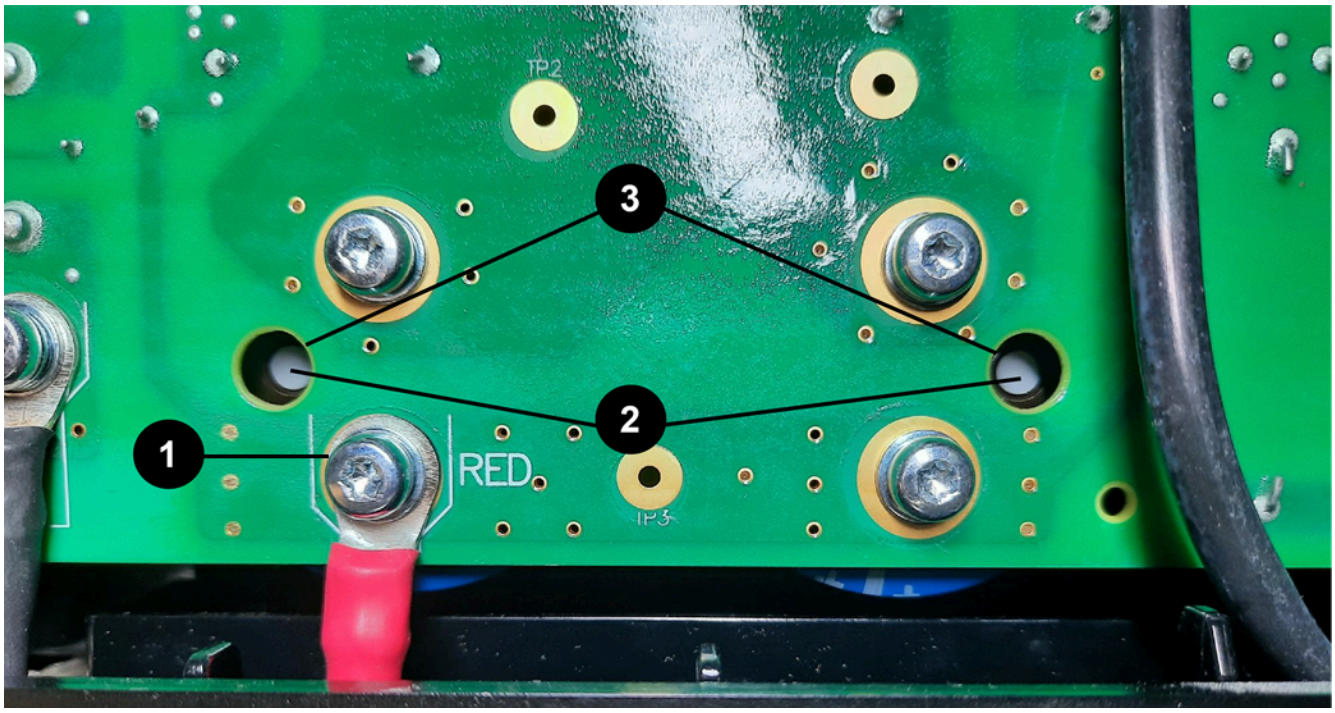

1 Transformer wire

2 Polarity dot

3 Viewing hole

4. Align the 4 clips on the fan plenum to the slot locations on the fan and press it into place.
5. Complete the following procedures:
    a. Install the component barrier on page 137.
    b. Install the plasma power supply cover and handle on page 134.
    c. Reconnect the gas supply.
    d. Reconnect the power cord.

Replace the snubber resistors

Remove the snubber resistors

1. Complete the following procedures:
    a. Set the power switch to OFF (**O**), disconnect the power cord from the power source, and disconnect the gas supply.
    b. Remove the plasma power supply cover and handle on page 133.

c. Remove the component barrier on page 136.

d. Remove the power PCB on page 176.

2. Remove the mounting screws and washers from the snubber resistors.

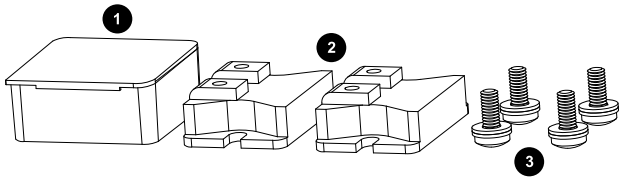

1 Thermal grease

2 Snubber resistors

3 M4 X 10 screws

3. Remove the snubber resistors from the heatsink.

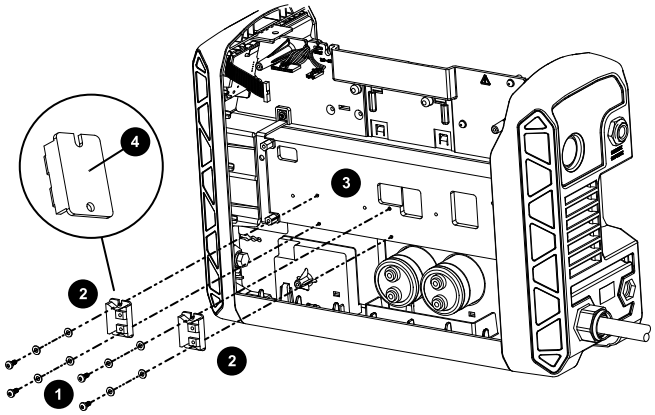

1 M4 X 10 screws

2 Snubber resistors

3 Heatsink

4 Thermal grease

Install the snubber resistors

NOTICE

POSSIBLE DAMAGE TO EQUIPMENT

Do not apply too much thermal grease to the components on the power PCB. Too much grease can cause damage to the power PCB and to the plasma power supply.

Apply only a very thin layer of thermal grease as shown in this procedure. **Do not apply all of the 1/8 ounce of grease that is supplied in the kit.**

1. Clean the area where the snubber resistors were mounted.

   Use isopropyl alcohol to remove the old thermal grease from the heatsink.

2. Apply a 0.0762 mm (0.003 inch) layer of thermal grease, about the thickness of a sheet of paper, evenly on the new snubber resistor mounting surface.

3. Mount the snubber resistors to the heatsink.

   Step-torque the mounting screws to 2.3 N·m (20 lbf·in).

4. Complete the following procedures:

   a. Install the power PCB on page 179.

   b. Install the component barrier on page 137.

   c. Install the plasma power supply cover and handle on page 134.

   d. Reconnect the gas supply.

   e. Reconnect the power cord.

Replace internal wires (1-phase models)

Remove internal wires (1-phase models)

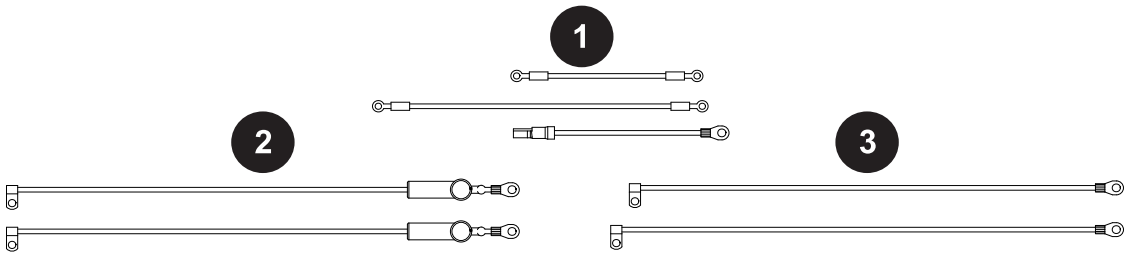

1 Ground wires

2 Wires that go from the power switch to the power cord (CSA) or EMI PCB (CE/CCC)

3 Wires that go from the power switch to the power PCB

Before you begin: For these steps, refer to the images in Install internal wires (1-phase models) on page 194.

1. Complete the following procedures:
    a. Set the power switch to OFF (**O**), disconnect the power cord from the power source, and disconnect the gas supply.
    b. Remove the plasma power supply cover and handle on page 133.
    c. Remove the component barrier on page 136.
    d. Remove the power switch (1-phase) on page 153.
2. From the power board side, disconnect the power switch black wire and white wire from the power board.
3. From the fan side, disconnect the power switch brown wire and blue wire from these locations:
    - **CSA models:** Power cord connection points on the center panel
    - **CE/CCC models:** "SW OUT" side of the EMI PCB
4. Disconnect the 3 ground wires from the ground stud on the center panel.

    If there are ground wires from the machine interface port or RS-485 connector, leave those terminals in place on the ground stud.

5. Disconnect the other end of each ground wire from these locations:
    - Air filter assembly
    - Ground clip on the rear panel
    - Magnetics assembly base plate

Install internal wires (1-phase models)

1. Slide the red insulating covers onto the new brown wire and blue wire.
2. Connect the brown wire and blue wire to these locations:
   - **CSA models:** Power cord connection points on the center panel
   - **CE/CCC models:** "SW OUT" side of the EMI PCB
3. Tighten to 2.3 N·m (20 lbf·in).
4. Slide the red insulating covers up into place so that they cover the screws.
5. Route the wires through the slot to the power switch area behind the front panel.
6. Connect the black wire and white wire to the power PCB.

   Tighten to 2.3 N·m (20 lbf·in).
7. Route the wires through the slot in the middle of the center panel and then through the slot near the power switch.
8. Wrap a cable tie around the 4 new wires (brown, blue, black, and white) above the solenoid valve.

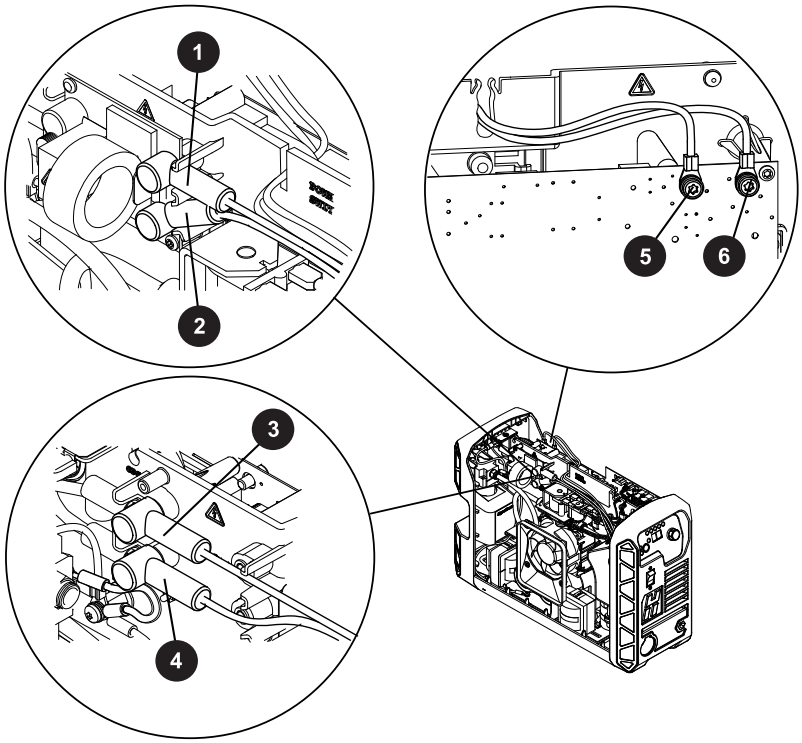

1	Brown wire on CE/CCC models (EMI PCB)	**4**	Blue wire on CSA models
2	Blue wire on CE/CCC models (EMI PCB)	**5**	Black power PCB wire
3	Brown wire on CSA models	**6**	White power PCB wire

9. Connect the 3 green ground wires to the ground stud on the center panel.

   Tighten the screws to 1.7 N·m (15 lbf·in).

   Rotate the ground wire terminals on the stud so that each wire points in a different direction.

10. Connect the short ground wire to the air filter assembly.

    Tighten to 2.3 N·m (20 lbf·in).

11. Connect the long ground wire to the metal base plate for the magnetics assembly.

    Tighten to 1.7 N·m (15 lbf·in).

12. Connect the push-on connector for the third ground wire to the ground clip on the rear panel.

Figure 17 - Internal ground wire connections

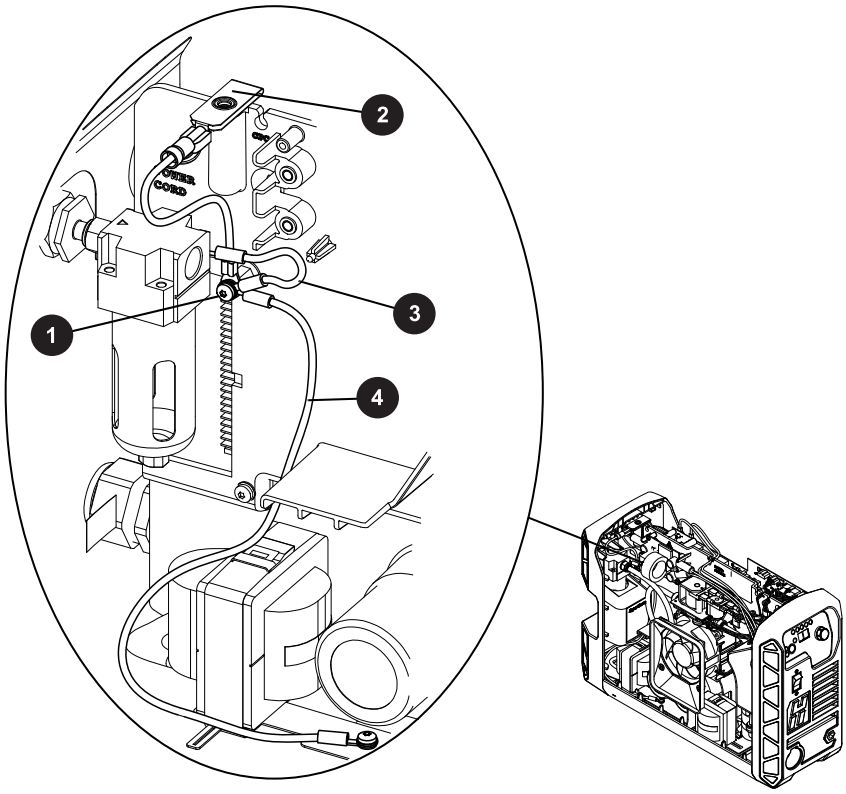

1	Ground stud	**3**	Air filter ground
2	Ground clip	**4**	Magnetics assembly ground

13. Complete the following procedures:
    a. Install the power switch (1-phase) on page 154.
    b. Install the component barrier on page 137.
    c. Install the plasma power supply cover and handle on page 134.
    d. Reconnect the gas supply.
    e. Reconnect the power cord.

Replace internal wires (3-phase models)

Remove internal wires (3-phase models)

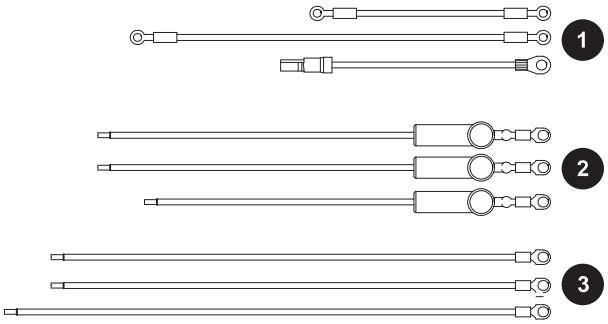

1 Ground wires

2 Wires that go from the power switch to the power cord

3 Wires that go from the power switch to the power PCB

Before you begin: For these steps, refer to Figure 18 on page 200 and Figure 17 on page 196.

1. Complete the following procedures:
    a. Set the power switch to OFF (**O**), disconnect the power cord from the power source, and disconnect the gas supply.
    b. Remove the plasma power supply cover and handle on page 133.
    c. Remove the component barrier on page 136.
    d. Remove the power switch (3-phase) on page 155.
2. From the power PCB side, disconnect the 3 wires that go from the power switch to the power PCB:
    - ☐ Brown wire with white stripe
    - ☐ Black wire with white stripe
    - ☐ White wire with black stripe

    If your system contains a white wire with a brown stripe, replace it with the brown wire with a white stripe contained in the kit.
3. From the fan side, disconnect the 3 wires that go from the power switch to the power cord connection points on the center panel:
    - ☐ Brown wire
    - ☐ White wire
    - ☐ Black wire

4. Disconnect the 3 ground wires from the ground stud on the center panel.

   If there are ground wires from the machine interface port or RS-485 connector, leave those terminals in place on the ground stud.

5. Disconnect the other end of each ground wire from:

   - Air filter assembly
   - Ground clip on the rear panel
   - Magnetics assembly base plate

Install internal wires (3-phase models)

1. From the power PCB side, connect the following 3 wires to the power PCB as shown.

   Tighten to 2.3 N·m (20 lbf·in).

   - Brown wire with white stripe
   - Black wire with white stripe
   - White wire with black stripe

2. Route the wires through the slot in the middle of the center panel and then through the slot near the power switch.
3. Slide the red insulating covers onto the new brown wire, white wire, and black wire.
4. From the fan side, connect the following 3 wires to the power cord connection points on the center panel.

   Tighten to 2.3 N·m (20 lbf·in).

   - Brown wire
   - White wire
   - Black wire

5. Slide the red insulating covers up into place so that they cover the screws.

   Route the wires through the slot in the power switch area behind the front panel.

6. Wrap a cable tie around the 6 new wires above the solenoid valve.
7. Connect the 3 green ground wires to the ground stud on the center panel as shown in Figure 17 on page 196.

   Tighten to 1.7 N·m (15 lbf·in).

Rotate the ground wire terminals on the stud so that each wire points in a different direction.

8. Connect the short ground wire to the air filter assembly.

   Tighten to 2.3 N·m (20 lbf·in).

9. Connect the long ground wire to the metal base plate for the magnetics assembly.

   Tighten to 1.7 N·m (15 lbf·in).

10. Connect the push-on connector for the third ground wire to the ground clip on the rear panel.

11. Complete the following procedures:

    a. Install the power switch (3-phase) on page 155.

    b. Install the component barrier on page 137.

    c. Install the plasma power supply cover and handle on page 134.

    d. Reconnect the gas supply.

    e. Reconnect the power cord.

Figure 18 - The 3-phase wire connections in the plasma power supply

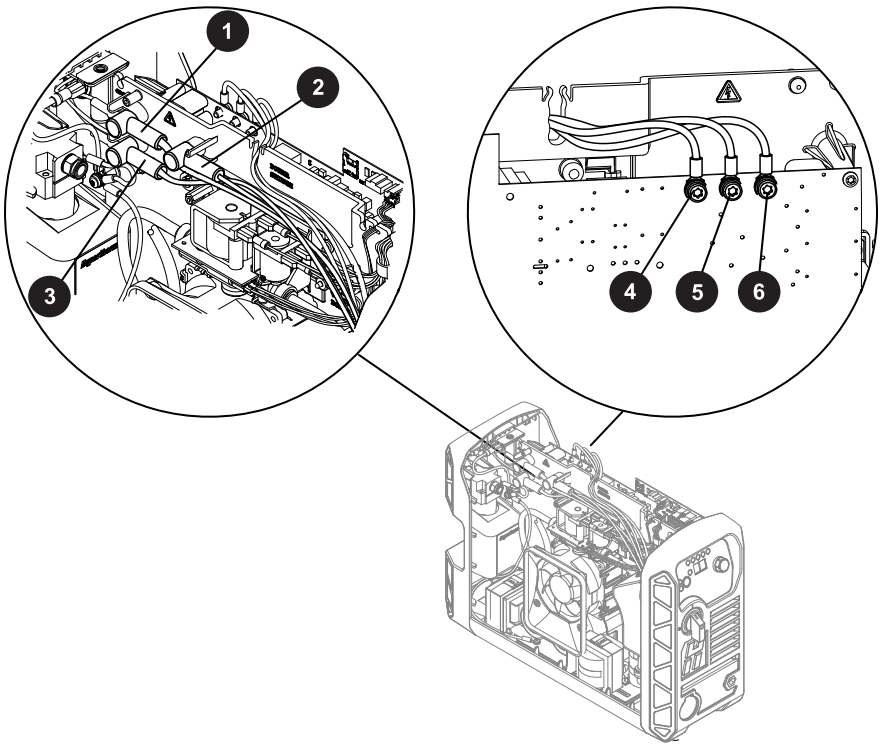

1	Brown wire	**4**	Brown wire with white stripe
2	White wire	**5**	Black wire with white stripe
3	Black wire	**6**	White wire with black stripe

Replace the power cord and strain relief (1-phase models)

Remove the power cord (1-phase models)

1. Complete the following procedures:
    a. Set the power switch to OFF (**O**), disconnect the power cord from the power source, and disconnect the gas supply.
    b. Remove the plasma power supply cover and handle on page 133.
    c. Remove the component barrier on page 136.
    d. Loosen the rear panel on page 144.

2. Make sure the 2 power cord wires are disconnected from the center panel (CSA models) or EMI PCB (CE/CCC models).
3. Make sure the power cord ground wire is disconnected from the heatsink.
4. Remove the strain relief outer nut to loosen the grip on the cord.
5. **CE/CCC models:** Unwrap the power cord wires from the toroid.
6. Pull the wires out through the strain relief.
7. If you are not installing a new power cord strain relief, remove the strain relief inner nut.

   Separate the strain relief from the rear panel.

Figure 19 - Components of 1-phase power cords

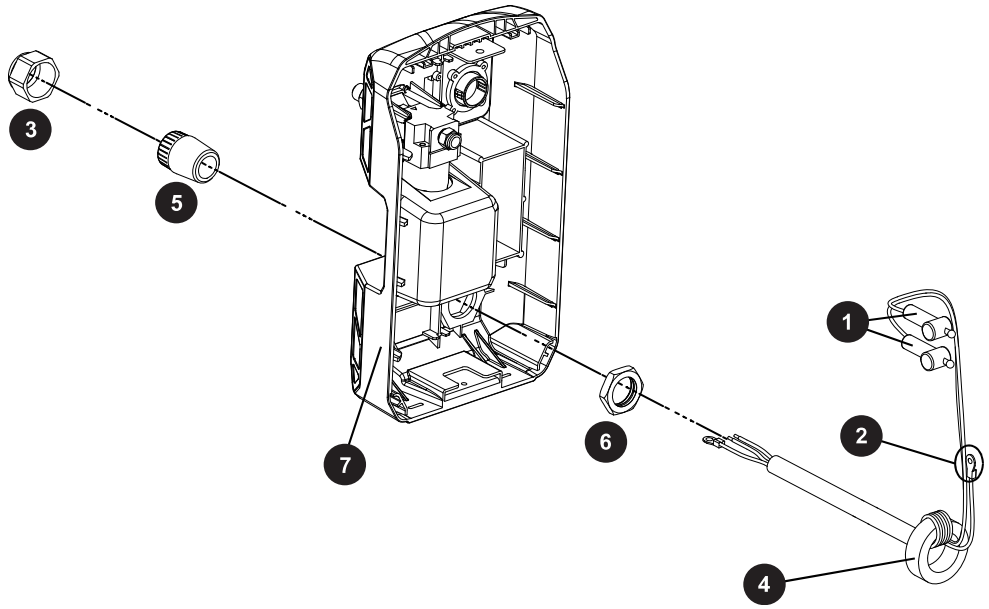

1	Two power cord wires	**5**	Strain relief
2	Ground wire	**6**	Inner nut
3	Outer nut	**7**	Rear panel
4	Toroid (CE/CCC only)		

Install the power cord (1-phase models)

Before you begin: For these steps, refer to Figure 19 on page 201.

1. Put the strain relief into place in the rear panel.

   Tighten the inner nut to 9 N·m (80 lbf·in).

2. Loosely tighten the outer nut onto the strain relief.
3. Pass the power cord wires through the outer nut and the strain relief:
    - **CSA models (kit 428664):** Pass the wires through the outside end of the strain relief into the rear panel. Orient the power cord so the green ground wire is below the other 2 wires, closer to the bottom of the rear panel.
    - **CE/CCC models (kit 428667):** Take the end of the cord opposite the toroid. Pass the wires through the strain relief from inside of the rear panel. Pull the cord through the strain relief until the toroid end of the cord reaches the strain relief. **Do not remove the toroid from the new power cord.**
4. Make sure there is enough wire length inside the power supply to reach the power cord connection points.

    Tighten the outer strain relief nut to secure the cord.
5. Complete the following procedures:
    a. Attach the rear panel on page 147.
    b. Install the component barrier on page 137.
    c. Install the plasma power supply cover and handle on page 134.
    d. Reconnect the gas supply.
    e. Reconnect the power cord.

Replace the power cord and strain relief (3-phase models)

Remove the power cord (3-phase models)

1. Complete the following procedures:
    a. Set the power switch to OFF (**O**), disconnect the power cord from the power source, and disconnect the gas supply.
    b. Remove the plasma power supply cover and handle on page 133.
    c. Remove the component barrier on page 136.
    d. Loosen the rear panel on page 144.
2. Make sure the 3 power cord wires are disconnected from the center panel.
3. Make sure the power cord ground wire is disconnected from the heatsink.

4. Remove the strain relief outer nut to loosen the grip on the cord.
5. **CE/CCC models:** Unwrap the power cord wires from the toroid.
6. Pull the wires out through the strain relief.
7. If you are not installing a new power cord strain relief, remove the strain relief inner nut.

   Separate the strain relief from the rear panel.

Figure 20 - Components of the 3-phase power cords

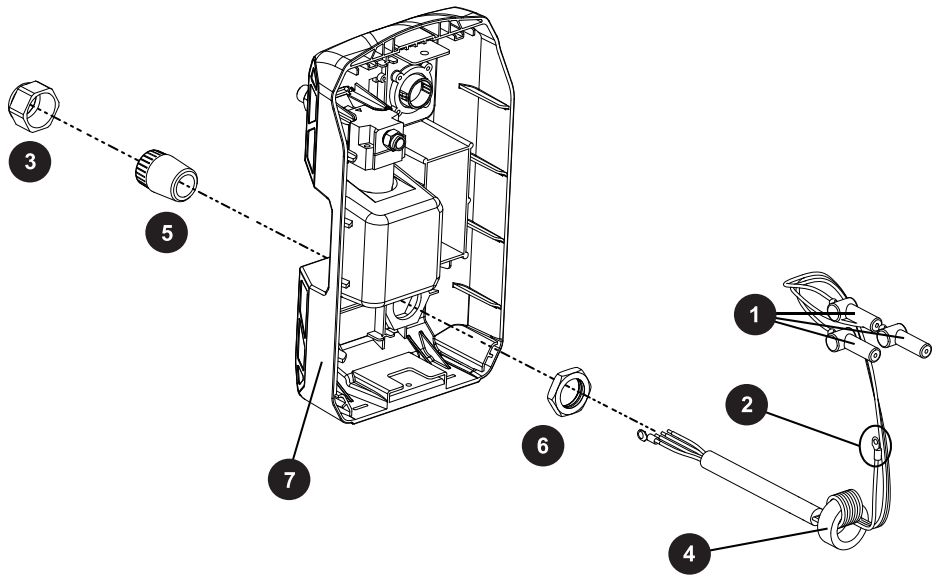

1	Power cord wires	**5**	Strain relief
2	Ground wire	**6**	Strain relief inner nut
3	Strain relief outer nut	**7**	Rear panel
4	Toroid (CE/CCC only)		

Install the power cord (3-phase models)

Before you begin: For these steps, refer to Figure 20 on page 203.

1. Put the strain relief into place in the rear panel.

   Tighten the inner nut to 9 N·m (80 lbf·in).
2. Loosely tighten the outer nut onto the strain relief.

3. Pass the power cord wires through the outer nut and the strain relief:
   - **CSA models (kit 428665):** Take the end of the cord terminated with ring terminals. Pass it through the outside end of the strain relief into the rear panel. Orient the power cord so the green ground wire is below the other 3 wires, closer to the bottom of the rear panel.
   - **CE/CCC models (kit 528147):** Take the end of the cord opposite the toroid. Pass the wires through the strain relief from inside of the rear panel. Pull the cord through the strain relief until the toroid end of the cord reaches the strain relief. **Do not remove the toroid from the new power cord.**
4. Make sure there is enough wire length inside the unit to reach the power cord connection points.

   Tighten the outer strain relief nut to secure the cord.
5. Complete the following procedures:
   a. Attach the rear panel on page 147.
   b. Install the component barrier on page 137.
   c. Install the plasma power supply cover and handle on page 134.
   d. Reconnect the gas supply.
   e. Reconnect the power cord.

Chapter 8: Change system settings

Overview

The Powermax45 SYNC plasma power supply lets you configure and view these system settings:

- Gas pressure units of measure
- Start signal detection on the machine interface port
- Firmware version
- Torch mode (smart or basic)
- CNC communication (parity bit, stop bits, address bits, and time delay
- Under pressure lock-out warning (enable or disable)
- Duty cycle clamp (enable or disable)
- HySpeed functionality (enable or disable)
- Alternate control parameter for expanded metal

System settings

Setting	Description	Defaults
	Change the gas pressure display values from psi (**P**) to bar (**B**) or from bar to psi.	CSA models – psi by default. CE/CCC models – bar by default.
	Enable or disable motion and start indicator (shown by the service LED on the plasma power supply front panel). • L.0 – disabled. No service LED • L.1 – TRANSFER signal enabled. When the TRANSFER signal is received by the plasma power supply, the service LED illuminates • L.2 – START signal enabled. When the START signal is received by the plasma power supply, the service LED illuminates	Disabled.
	Displays firmware version: F.0 through F.9.	Unit specific.
	Choose between smart mode, torch mode, and basic mode. In smart mode, the plasma power supply automatically sets the operating mode, gas pressure, and amperage based on the type of Hypertherm cartridge installed. Refer to Smart mode versus basic mode on page 209 for details. • t.0 Smart mode. This is the default setting. • t.1 Torch mode (reserved for future use) • t.2 Basic mode	Smart mode.
	CNC parity setting • C.E – even • C.0 – odd • Cn – no parity	Even parity bit.
	CNC - number of stop bits per byte. • 5.1 – one stop bit • 5.2 – two stop bits	One stop bit

Setting	Description	Defaults
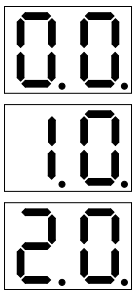	CNC address bits • 0.0 – CNC address, third digit. Change the hundreds place value from 0 to 2. 0.0 = 0xx, 0.1 = 1xx, 0.2 = 2xx. • 1.0 – CNC address second digit. Change the tens place value from 0 to 9. For example, 1.3 = x3x, 1.4 = x4x, 1.5 = x5x,. • 2.0 – CNC address first digit. Change the ones place value from 0 to 9. For example, 2.6 = xx6, 2.7 = xx7, 2.8 = xx8.	0.0 – Zero in the hundreds place 1.0 – Zero in the tens place. 2.0 – Zero in the ones place. Example — CNC node address set to 245: 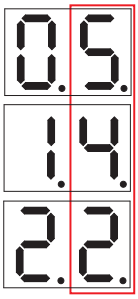
	Change the time delay between receive and transmit (Rx and Tx) actions. This applies to half-duplex serial communications where the same wires are used for receiving and transmitting data. • d.0 – 0ms • d.1 – 10ms • d.2 – 50ms	No delay (d.0).
	Show or hide the under pressure lockout warning (UPLO) fault code (0-20-0). When disabled, the plasma power supply will not display the UPLO (0-20-0) warning when the air supply goes below the safe minimum operating pressure. • P.0 – enable under pressure lockout warning • P.1 – disable under pressure lockout warning	Enabled
	Enable or disable the duty cycle clamp. • H.0 – enabled • H.1 – disabled	Enabled
	Enable or disable HySpeed functionality with delayed postflow. • y.0 – disabled (default) • y.1 – enabled	Disabled

Setting	Description	Defaults
	Select alternate control parameter for highly spaced expanded metal. • A.0 – default • A.1– alternate control parameter for highly spaced expanded metal	A.0 (not highly spaced expanded metal)
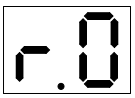	Reset all settings to factory defaults. • r.0 – Do not reset. • r.1 – Reset.	
	Exit the settings menu.	

Change system settings

Use the Powermax45 SYNC setup menu to change system settings.

1. Push and hold the mode button until S.U. shows in the LED display.

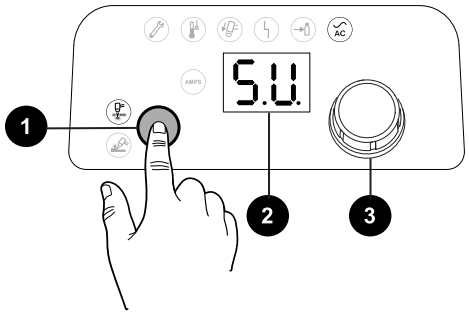

1 Mode button

2 LED display

3 Control knob

2. Release the mode button.
3. Turn the control knob to show other setup options.
4. Push the mode button to select a setup option.
5. Turn the control knob to change the value for the setup option.
6. Push the mode button to select the new value.

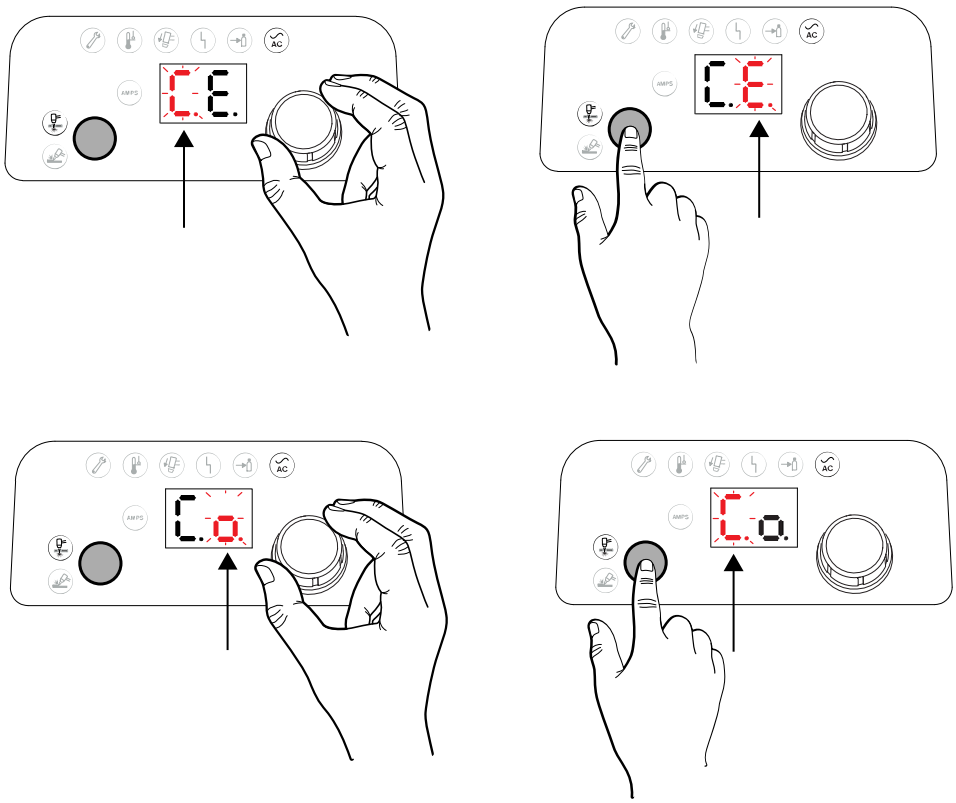

7. Select **E.t**.
8. Press the mode button to save your changes and exit the setup menu.
9. Do a cold restart of the plasma power supply.

Smart mode versus basic mode

By default the system is in smart mode. Hypertherm recommends that you keep the system in smart mode. But very experienced operators or qualified service technicians can use basic mode to help with troubleshooting if necessary.

When there is no Hypertherm cartridge communication with the plasma power supply, or when torch communication with the plasma power supply is broken, the system operates as if it is in basic mode, regardless of the system setting.

Smart mode

When the system is in smart mode and you use a Hypertherm cartridge with a SmartSYNC torch, the system does many things for you automatically:

- It sets the operating mode and the output current (A) to the correct settings for your Hypertherm cartridge. For example, if you install a 45 A Hypertherm gouging cartridge, the system automatically goes into Gouge mode and sets the amperage to 45 A.
- It records use data for the Hypertherm cartridge. You can see Hypertherm cartridge data by using the Hypertherm cartridge reader and the Hypertherm cartridge reader app (528083).
- It adjusts the gas pressure to the correct settings for your Hypertherm cartridge and torch.

Basic mode

When the system is in basic mode, it does not set the operating mode or the output current (A) for you. You must adjust those settings manually.

System behavior also changes in these ways:

- The system does not record data on pilot arcs or arc transfers for the Hypertherm cartridge.
- The fault LED on the hand torch flashes yellow for as long as the system is in basic mode.
- The amperage-adjustment control on the hand torch does not adjust the amperage for as long as the system is in basic mode.
- You must set the plasma power supply to OFF (**O**) before you remove the Hypertherm cartridge or move the torch-lock switch to the yellow "lock" position. Otherwise you will get a Hypertherm cartridge missing fault and the torch will not fire.

  To install or change a SYNC® Hypertherm cartridge while in basic mode, or to clear a Hypertherm cartridge missing fault:

  - ☐ Set the power switch on the plasma power supply to OFF (**O**).
  - ☐ Install a Hypertherm cartridge.
  - ☐ Move the trigger to the green "ready to fire" position.
  - ☐ Set the power switch to ON (**I**).

Chapter 9: How the plasma power supply operates

Theory of operation

Overview

In addition to the functional descriptions in these topics, refer to:

- System diagrams on page 218

Hypertherm plasma power supply ratings

Rated open-circuit voltage (U_0)	200 V – 240 V, CSA/CE/CCC 400 V, CE/CCC 480 V, CSA	275 VDC 265 VDC 275 VDC
Output characteristic [1]	Drooping	
Rated output current (I_2)	9 A – 45 A [2]	
Rated output voltage (U_2)	155 VDC	
Duty cycle at 40°C (104°F) [3]	50% at 45 A (I_2) / 155 VDC (U_2) 60% at 41 A (I_2) / 155 VDC (U_2) 100% at 32 A (I_2) / 155 VDC (U_2)	
Operating temperature	-10°C – 40°C (14°F – 104°F)	

Storage temperature	-25°C – 55°C (-13°F – 131°F)		
Power factor	200 V - 240 V, 1-phase, CSA/CE/CCC 400 V, 3-phase, CE/CCC 480 V, 3-phase, CSA		0.99 0.94 0.93
Idle state power consumption (CE models)	230 V 400 V		17 W 23 W
Power source efficiency at rated maximum output power (CE models)	230 V 400 V		90.3% 89.9%
R_{sce} – Short Circuit Ratio (CE models only)	U_1 - Volts AC rms, 3-phase 400 V, CE		R_{sce} 73
Electromagnetic Compatibility (EMC) emissions classification CISPR 11 (CE models only) [4]	Class A		
Input voltage (U1) / Input current (I1) at rated output (U2 MAX I2 MAX)	CSA (50 Hz/60Hz) 1-Phase: • 200 V: 40 A • 208 V: 37.5 A • 240 V: 33 A 3-Phase: • 480 V: 10 A		CE/CCC (50 Hz/60 Hz) 1-phase [5, 6] • 220 V: 37 A • 230 V: 34.3 A 3-phase [4, 7] • 380 V: 13 A • 400 V: 12 A
Gas type	Air	Nitrogen (N_2)	F5 [8]
Gas quality	Clean, dry, oil-free per ISO 8573-1 Class 1.2.2	99.95% pure Clean, dry, oil-free	99.98% pure (F5 = 95% nitrogen [N_2], 5% hydrogen [H])
Recommended gas inlet flow rate/ pressure	Cutting		212 slpm at 5.9 bar (450 scfh at 85 psi)
	Maximum removal gouging		212 slpm at 4.8 bar (450 scfh at 70 psi)
	Marking		142 slpm at 4.1 bar (300 scfh at 60 psi)

1 Defined as a plot of output voltage versus output current.

2 An output current setting of 9 A to 19 A is reserved for marking, and is only available when a FineCut Hypertherm cartridge is installed on the torch.

3 Refer to the data plate on the bottom of the plasma power supply for more information about duty cycle and for IEC ratings.

4 NOTICE: This Class A equipment is not intended for use in residential locations where the public low voltage supply system supplies the electrical power. It is not always easy to supply electromagnetic compatibility in those locations, because of conducted and radiated disturbances.

5 This product meets the technical requirements of IEC 61000-3-3 and is not subject to conditional connection.

6 Equipment complies with IEC 61000-3-12.

7 Equipment complies with IEC 61000-3-12 if the Short-circuit power (Ssc) is greater than or equal to 1003 KVA at the interface point between the operator's supply and the public system. The installer or user of the equipment must consult with the distribution network operator, if necessary, to ensure that the equipment is connected only to an electric power source with a Ssc greater than or equal to 1003 KVA.

8 F5 is only recommended to cut stainless steel.

200 V – 240 V 1-phase plasma power supply functional description

For CSA models, AC power enters the system through the power switch (S1). For CE/CCC models, AC power is routed through the EMI board (PCB2) before it reaches the power switch. AC power goes from the power switch to the input diode bridge (D6). The voltage from the diode bridge supplies the PFC boost converter, which provides a nominal 400 VDC bus voltage. The bus wires then supply voltage and current to the inverter and the flyback circuit power supply (DC to DC converter) on the power board (PCB3). The power board provides noise suppression and spike protection. A "soft start" is implemented via the power board resistor and relays.

The PFC boost converter consists of an insulated gate bipolar transistor (IGBT Q2), PFC choke, and control circuit. It provides a 400 VDC bus voltage when the input AC voltage is between 200 VAC – 240 VAC.

The inverter consists of a dual IGBT package (Q1), the power transformer, an output current sensor, and the control circuit. The inverter operates as a pulse-width modulated half-bridge circuit driving an isolation transformer. The output of the isolation transformer is rectified by the output bridge (Q10).

The output circuitry consists of 2 current sensors located on the power PCB, the pilot arc IGBT (inside the Q10 module), and the output choke.

The DSP on the power PCB monitors and regulates the system operation and safety circuits. The adjustment knob on the display PCB (PCB1) is used to set the output current to the desired value between 9 A – 45 A. The system compares the set-point to the output current by monitoring the current sensors and adjusting the pulse-width output of each inverter IGBT (Q1). A trip coil on the power switch provides over-voltage protection.

400 V CE/CCC 3-phase plasma power supply functional description

AC power enters the system through the power switch (S1) to the input diode bridge (D48). The voltage from the diode bridge supplies the PFC choke, which provides a nominal 560 VDC bus voltage. The bus wires then supply voltage and current to the inverter and the flyback circuit power supply (DC to DC converter) on the power PCB (PCB3). The power board provides noise suppression and spike protection. A "soft start" is implemented via the power PCB resistor and relays.

The inverter consists of a dual IGBT package (Q1), the power transformer, an output current sensor, and the control circuit. The inverter operates as a pulse-width modulated half-bridge circuit driving an isolation transformer. The output of the isolation transformer is rectified by the output bridge (Q10).

The output circuitry consists of 2 current sensors located on the power PCB, the pilot arc IGBT (inside the Q10 module), and the output choke.

The DSP) on the power PCB monitors and regulates the system operation and safety circuits. The adjustment knob on the display PCB (PCB1) is used to set the output current to the desired value between 9 A – 45 A. The system compares the set-point to the output current by monitoring the current sensors and adjusting the pulse-width output of the inverter IGBT (Q1).

480 V CSA 3-phase plasma power supply functional description

AC power enters the system through the power switch (S1) to the input diode bridge (D48).

The voltage from the diode bridge supplies the PFC choke, which provides a nominal 670 VDC bus voltage.

The bus wires then supply voltage and current to the inverter and the flyback circuit power supply (DC to DC converter) on the power PCB (PCB3). The power PCB provides noise suppression and spike protection. A "soft start" is implemented via the power board resistor and relays.

The inverter consists of a dual IGBT package (Q1), the power transformer, an output current sensor, and the control circuit. The inverter operates as a pulse-width modulated half-bridge circuit driving an isolation transformer. The output of the isolation transformer is rectified by the output bridge (Q10).

The output circuitry consists of 2 current sensors located on the power PCB, the pilot arc IGBT (inside the Q10 module), and the output choke.

The DSP on the power PCB monitors and regulates the system operation and safety circuits. The adjustment knob on the display PCB (PCB1) is used to set the output current to the

desired value between 9 A – 45 A. The system compares the set-point to the output current by monitoring the current sensors and adjusting the pulse-width output of the inverter IGBT (Q1).

Plasma power supply system components

200 V – 240 V 1-phase plasma power supply

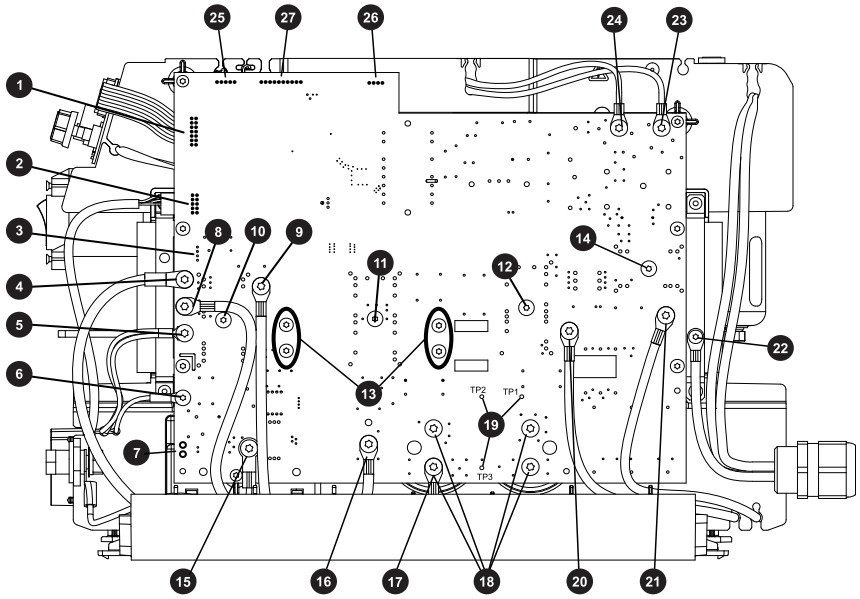

1	Display PCB interface (J3)	15	Work lead wire (J23)
2	Torch interface (J19)	16	Power transformer primary – black (J6)
3	Machine interface (CPC) (J21)	17	Power transformer primary – red
4	Output inductor – yellow (J13)	18	Capacitor screws (4)
5	Red nozzle wires (J15)	19	Test points (TP1, TP2, TP3)
6	White electrode wire (J18)	20	PFC inductor – black (J4)
7	Voltage divider PCB interface (J17)	21	PFC inductor – red (J5)
8	Power transformer secondary – black (J14)	22	Ground
9	Power transformer secondary – red (J12)	23	AC input wire – white (J1)
10	Output diode and pilot arc IGBT (Q10)	24	AC input wire – black (J2)
11	Inverter IGBT (Q1)	25	Serial communication (RS-485) interface (J11)

12	PFC IGBT (Q2)	26	Fan interface (J7)
13	Snubber resistors (2)	27	Solenoid valve interface (J8)
14	Input diode bridge (D6)		

400 V CE/CCC and 480 V CSA 3-phase plasma power supply

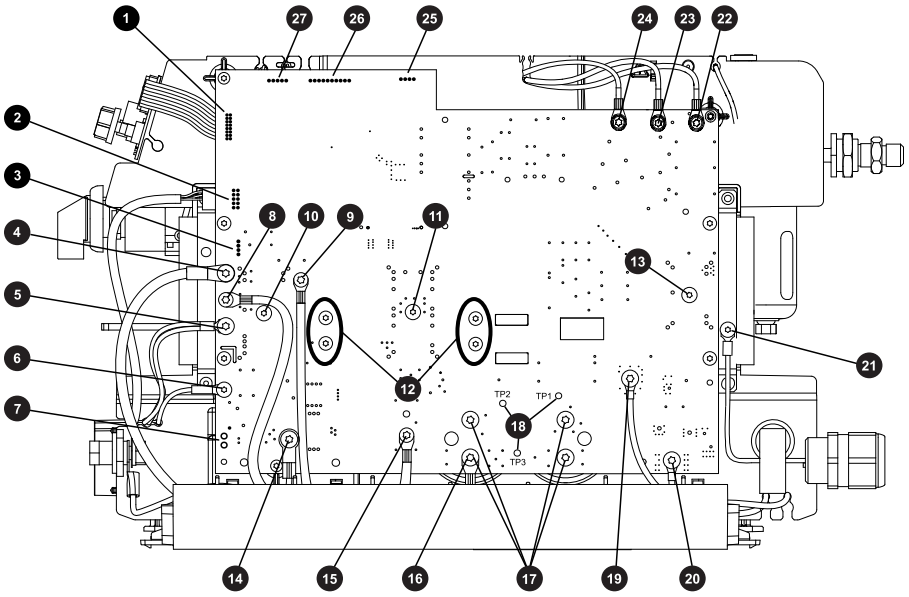

1	Display PCB interface (J3)	15	Power transformer primary – black (J6)
2	Torch interface (J19)	16	Power transformer primary – red
3	Machine interface (CPC) (J21)	17	Capacitor screws (4)
4	Output inductor – yellow (J13)	18	Test points (TP1, TP2, TP3)
5	Red nozzle wires (J15)	19	PFC inductor – black (J26)
6	White electrode wire (J18)	20	PFC inductor – red (J5)
7	Voltage divider PCB interface (J17)	21	Ground
8	Power transformer secondary – black (J14)	22	ACAC input wire – brown with white stripe (J4)
9	Power transformer secondary – red (J12)	23	AC input wire – black with white stripe (J2)
10	Output diode and pilot arc IGBT (Q10)	24	AC input wire – white with black stripe (J1)
11	Inverter IGBT (Q1)	25	Fan interface (J7)
12	Snubber resistors (2)	26	Solenoid valve interface (J8)
13	Input diode bridge (D48)	27	Serial communication (RS-485) interface (J11)
14	Work lead wire (J23)		

Chapter 10: System diagrams

System diagrams

This section contains the following system diagrams:

- Powermax45 SYNC schematic — 200 V – 240 V 1-phase models on page 219
- Powermax45 SYNC schematic — 400 V CE/CCC and 480 V CSA 3-phase models shown on page 220
- Timing chart for torch start on page 221

Powermax45 SYNC schematic — 200 V – 240 V 1-phase models

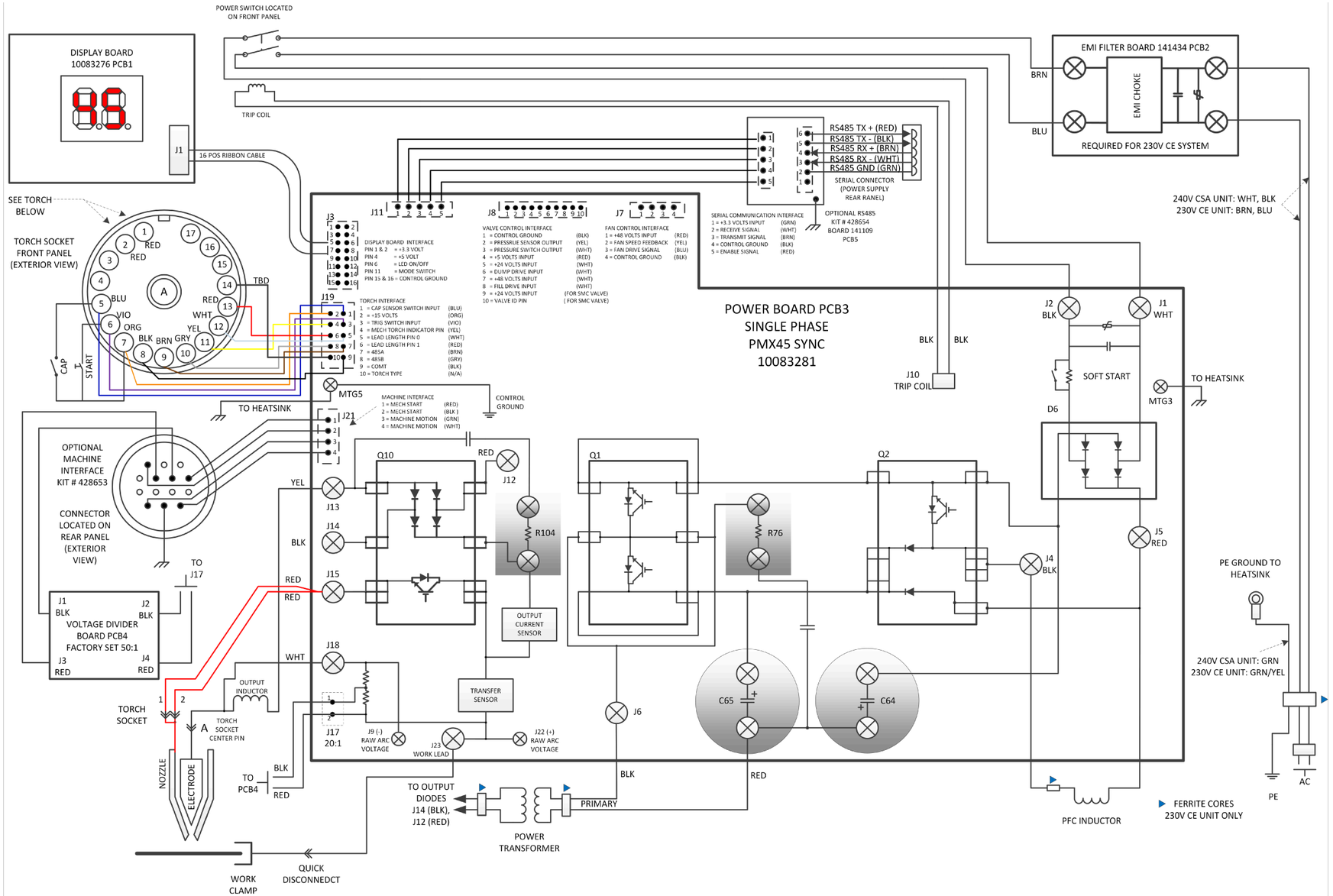

Powermax45 SYNC schematic — 400 V CE/CCC and 480 V CSA 3-phase models shown

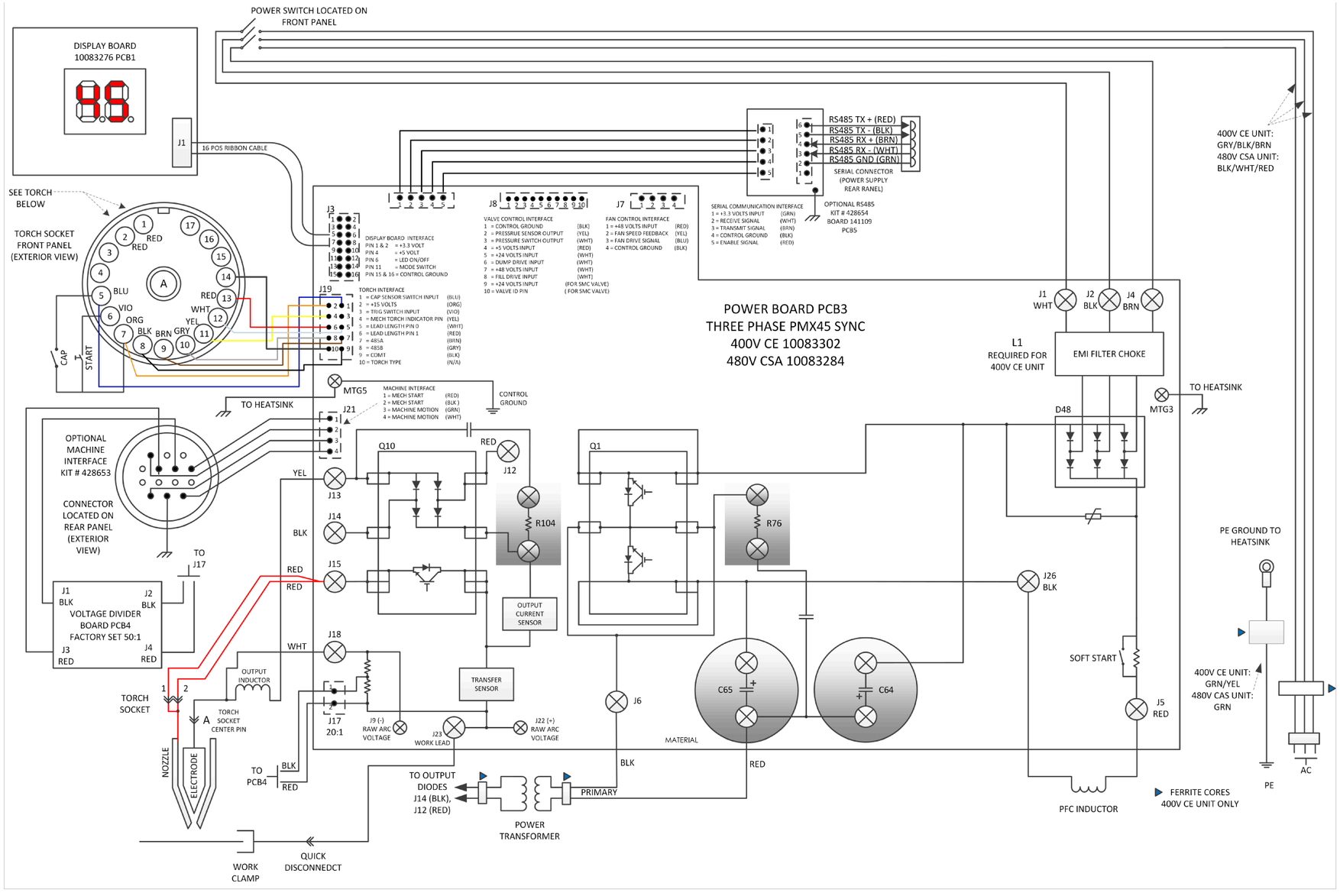

Timing chart for torch start

